INSTRUMENT ENGINEERS' HANDBOOK

Fourth Edition

Process Measurement and Analysis

BÉLA G. LIPTÁK, Editor-in-Chief

CRC PRESS

ISA–The Instrumentation, Systems, and Automation Society

INSTRUMENT ENGINEERS' HANDBOOK

Fourth Edition

Process Measurement and Analysis

VOLUME I

INSTRUMENT ENGINEERS' HANDBOOK

Fourth Edition

Process Measurement and Analysis

VOLUME I

Béla G. Lipták

EDITOR-IN-CHIEF

ISA–The Instrumentation, Systems, and Automation Society

CRC PRESS

Boca Raton London New York Washington, D.C.

This reference text is published in cooperation with ISA Press, the publishing division of ISA—Instrumentation, Systems, and Automation Society. ISA is an international, nonprofit, technical organization that fosters advancement in the theory, design, manufacture, and use of sensors, instruments, computers, and systems for measurement and control in a wide variety of applications. For more information, visit www.isa.org or call (919) 549-8411.

Library of Congress Cataloging-in-Publication Data

Instrument engineers' handbook / Béla G. Lipták, editor-in-chief.
p. cm.
Rev. ed. of: Instrument engineers' handbook. Process measurement and analysis. c1995 and Instrument engineers' handbook. Process control. c1995.
Includes bibliographical references and index.
Contents: v. 1. Process measurement and analysis.
ISBN 0-8493-1083-0 (v. 1)
1. Process control—Handbooks, manuals, etc. 2. Measuring instruments—Handbooks, manuals, etc. I. Lipták, Béla G. II. Instrument engineers' handbook. Process measurement and analysis.

TS156.8 .I56 2003
629.8—dc21 2003048453

his book contains information obtained from authentic and highly regarded sources. Reprinted material is quoted with permission, and sources are indicated. A wide variety of references are listed. Reasonable efforts have been made to publish reliable data and information, but the author and the publisher cannot assume responsibility for the validity of all materials or for the consequences of their use.

Neither this book nor any part may be reproduced or transmitted in any form or by any means, electronic or mechanical, including photocopying, microfilming, and recording, or by any information storage or retrieval system, without prior permission in writing from the publisher.

All rights reserved. Authorization to photocopy items for internal or personal use, or the personal or internal use of specific clients, may be granted by CRC Press LLC, provided that $1.50 per page photocopied is paid directly to Copyright Clearance Center, 222 Rosewood Drive, Danvers, MA 01923 USA. The fee code for users of the Transactional Reporting Service is ISBN 0-8493-1083-0 (v. 1)/03/$0.00+$1.50. The fee is subject to change without notice. For organizations that have been granted a photocopy license by the CCC, a separate system of payment has been arranged.

The consent of CRC Press LLC does not extend to copying for general distribution, for promotion, for creating new works, or for resale. Specific permission must be obtained in writing from CRC Press LLC for such copying.

Direct all inquiries to CRC Press LLC, 2000 N.W. Corporate Blvd., Boca Raton, Florida 33431.

Trademark Notice: Product or corporate names may be trademarks or registered trademarks, and are used only for identification and explanation, without intent to infringe.

Visit the CRC Press Web site at www.crcpress.com

© 2003 by Béla Lipták

No claim to original U.S. Government works
International Standard Book Number 0-8493-1083-0 (v. 1)
Library of Congress Card Number 2003048453
Printed in the United States of America 1 2 3 4 5 6 7 8 9 0
Printed on acid-free paper

Dedicated to you, my colleagues, the instrument and process control engineers. I hope that by applying the knowledge found on these pages you will make our industries more efficient, safer, and cleaner, and thereby will not only contribute to a happier future for all mankind but will also advance the recognition and respectability of our profession.

© 2003 by Béla Lipták

CONTENTS

Contributors xiii
Introduction xxi
Definitions xxvii
Abbreviations, Nomenclature, Acronyms, and Symbols xxxix
Societies and Organizations li

1 General Considerations 1

1.1 Flowsheet Symbols and P&I Diagrams 4
1.2 Functional Diagrams and Function Symbols 31
1.3 Instrument Terminology and Performance 46
1.4 System Accuracy 78
1.5 Uncertainty Calculations 86
1.6 Configuring Intelligent Devices 93
1.7 Instrument Installation 100
1.8 Instrument Calibration 108
1.9 Response Time and Drift Testing 114
1.10 Redundant and Voting Systems 126
1.11 Instrument Evaluation 136
1.12 Binary Logic Diagrams 142

2 Flow Measurement 151

2.1 Application and Selection 156
2.2 Anemometers 173
2.3 BTU Flowmeters for Heat Exchangers 177
2.4 BTU Flowmeters for Gaseous Fuels 180
2.5 Cross-Correlation Flow Metering 183
2.6 Elbow Taps 189
2.7 Flow Switches 193
2.8 Jet Deflection Flow Detectors 198
2.9 Laminar Flowmeters 201
2.10 Magnetic Flowmeters 208
2.11 Mass Flowmeters, Coriolis 225
2.12 Mass Flowmeters—Miscellaneous 237
2.13 Mass Flowmeters—Thermal 244
2.14 Metering Pumps 251
2.15 Orifices 259
2.16 Pitot Tubes and Area Averaging Units 277
2.17 Polyphase (Oil/Water/Gas) Flowmeters 287

© 2003 by Béla Lipták

2.18 Positive-Displacement Gas Flowmeters 294
2.19 Positive-Displacement Liquid Meters and Provers 299
2.20 Purge Flow Regulators 307
2.21 Segmental Wedge Flowmeter 310
2.22 Sight Flow Indicators 313
2.23 Solids Flowmeters and Feeders 318
2.24 Target Meters 335
2.25 Turbine and Other Rotary Element Flowmeters 337
2.26 Ultrasonic Flowmeters 357
2.27 Variable-Area, Gap, and Vane Flowmeters 362
2.28 V-Cone Flowmeter 371
2.29 Venturi Tubes, Flow Tubes, and Flow Nozzles 374
2.30 Vortex and Fluidic Flowmeters 384
2.31 Weirs and Flumes 395

3 Level Measurement 401

3.1 Application and Selection 405
3.2 Bubblers 421
3.3 Capacitance and Radio Frequency (RF) Admittance 430
3.4 Conductivity and Field-Effect Level Switches 445
3.5 Diaphragm Level Detectors 449
3.6 Differential Pressure Level Detectors 454
3.7 Displacer Level Devices 465
3.8 Float Level Devices 474
3.9 Laser Level Sensors 482
3.10 Level Gauges, Including Magnetic 486
3.11 Microwave Level Switches 497
3.12 Optical Level Devices 500
3.13 Radar, Noncontacting Level Sensors 504
3.14 Radar, Contact Level Sensors (TDR, GWR, PDS) 508
3.15 Radiation Level Sensors 514
3.16 Resistance Tapes 526
3.17 Rotating Paddle Switches 530
3.18 Tank Gauges Including Float-Type Tape Gauges 533
3.19 Thermal Level Sensors 544
3.20 Ultrasonic Level Detectors 548
3.21 Vibrating Level Switches 556

4 Temperature Measurement 561

4.1 Application and Selection 565
4.2 Bimetallic Thermometers 590
4.3 Calibrators and Simulators 594
4.4 Cones, Crayons, Labels, Paints, and Pellets 599
4.5 Fiber-Optic Thermometers 604
4.6 Filled-Bulb and Glass-Stem Thermometers 610
4.7 Integrated Circuitry Transistors and Diodes 620
4.8 Miscellaneous and Discontinued Sensors 623
4.9 Radiation and Infrared Pyrometers 630
4.10 Resistance Temperature Detectors 645
4.11 Temperature Switches and Thermostats 657
4.12 Thermistors 666
4.13 Thermocouples 673

© 2003 by Béla Lipták

4.14 Thermowells 697
4.15 Ultrasonic and Sonic Thermometers 705

5 Pressure Measurement 709

5.1 Selection and Application 712
5.2 Accessories (Seals, Snubbers, Calibrators, Manifolds) 718
5.3 Bellows-Type Pressure Sensors 726
5.4 Bourdon and Helical Pressure Sensors 731
5.5 Diaphragm or Capsule-Type Sensors 736
5.6 Differential Pressure Instruments 743
5.7 Electronic Pressure Sensors 751
5.8 High-Pressure Sensors 762
5.9 Manometers 766
5.10 Multiple Pressure Scanners 774
5.11 Pressure Gauges 779
5.12 Pressure Repeaters 785
5.13 Pressure and Differential Pressure Switches 790
5.14 Vacuum Sensors 795

6 Density Measurement 807

6.1 Density: Applications and Selection 809
6.2 Displacement- and Float-Type Densitometers 816
6.3 Hydrometers 823
6.4 Hydrostatic Densitometers 826
6.5 Oscillating Coriolis Densitometer (Gas, Liquid, and Slurry Services) 831
6.6 Radiation Densitometers 836
6.7 Ultrasonic Sludge and Slurry Densitometers 841
6.8 Liquid/Slurry/Gas Density—Vibrating Densitometers 844
6.9 Weight-Based and Miscellaneous Densitometers 852
6.10 Gas Densitometers 857

7 Safety and Miscellaneous Sensors 865

7.1 Boroscopes 872
7.2 Electrical and Intrinsic Safety 875
7.3 Electrical Meters and Sensors 889
7.4 Energy Management Devices (Peak Load Shedding) 903
7.5 Excess Flow and Regular Check Valves 908
7.6 Explosion Suppression and Deluge Systems 912
7.7 Flame Arresters, Conservation Vents, and Emergency Vents 920
7.8 Flame, Fire, and Smoke Detectors 928
7.9 Leak Detectors 936
7.10 Linear and Angular Position Detection 944
7.11 Machine Vision Technology 951
7.12 Metal Detectors 955
7.13 Noise Sensors 958
7.14 Proximity Sensors and Limit Switches 964
7.15 Relief Valves—Determination of Required Capacity 973
7.16 Relief Valves—Sizing, Specification, and Installation 991
7.17 Rupture Discs 1018
7.18 Soft Sensors 1030
7.19 Tachometers and Angular Speed Detectors 1038
7.20 Thickness and Dimension Measurement 1045
7.21 Torque and Force Transducers 1051
7.22 Vibration, Shock, and Acceleration 1061

© 2003 by Béla Lipták

7.23 Weather Stations 1077
7.24 Weighing Systems: General Considerations 1084
7.25 Weight Sensors 1101

8 Analytical Instrumentation 1127

8.1 Analyzer Application and Selection 1144
8.2 Analyzer Sampling: Process Samples 1170
8.3 Analyzer Sampling: Stack Particulates 1189
8.4 Analyzers Operating on Electrochemical Principles 1198
8.5 Air Quality Monitoring 1207
8.6 Biometers 1222
8.7 Biological Oxygen Demand, Chemical Oxygen Demand, and Total Oxygen Demand 1224
8.8 Calorimeters 1235
8.9 Carbon Dioxide 1242
8.10 Carbon Monoxide 1245
8.11 Chlorine 1251
8.12 Chromatographs: Gas 1258
8.13 Chromatographs: Liquid 1289
8.14 Coal Analyzers 1295
8.15 Colorimeters 1299
8.16 Combustibles 1304
8.17 Conductivity Analyzers 1316
8.18 Consistency Analyzers 1323
8.19 Corrosion Monitoring 1329
8.20 Differential Vapor Pressure Sensor 1335
8.21 Dioxin Analysis 1339
8.22 Elemental Monitors 1342
8.23 Fiber-Optic Probes 1347
8.24 Fluoride Analyzers 1353
8.25 Hydrocarbon Analyzers 1358
8.26 Hydrogen Sulfide 1364
8.27 Infrared and Near-Infrared Analyzers 1369
8.28 Ion-Selective Electrodes 1388
8.29 Mass Spectrometers 1399
8.30 Mercury in Ambient Air 1407
8.31 Mercury in Water 1413
8.32 Moisture in Air: Humidity and Dew Point 1420
8.33 Moisture in Gases and Liquids 1434
8.34 Moisture in Solids 1450
8.35 Molecular Weight 1457
8.36 Nitrate, Ammonia, and Total Nitrogen 1469
8.37 Nitrogen Oxide Analyzers 1474
8.38 Odor Detection 1480
8.39 Oil in or on Water 1486
8.40 Open Path Spectrophotometry (UV, IR, FT-IR) 1493
8.41 Oxidation-Reduction Potential (ORP) 1506
8.42 Oxygen in Gases 1514
8.43 Oxygen in Liquids (Dissolved Oxygen) 1526
8.44 Ozone in Gas 1536
8.45 Ozone in Water 1540
8.46 Particulates, Opacity, Dust, and Smoke 1544
8.47 Particle Size and Distribution Monitors 1559
8.48 pH Measurement 1565
8.49 Phosphorus Analyzer 1585

© 2003 by Béla Lipták

8.50 Physical Properties Analyzers—ASTM Methods 1589
8.51 Raman Analyzers 1606
8.52 Refractometers 1620
8.53 Rheometers 1628
8.54 Streaming Current or Particle Charge Analyzer 1637
8.55 Sulfur-in-Oil Analyzers 1641
8.56 Sulfur Oxide Analyzers 1646
8.57 Thermal Conductivity Detectors 1653
8.58 Total Carbon Analyzers 1658
8.59 Toxic Gas Monitoring 1666
8.60 Turbidity, Sludge, and Suspended Solids 1680
8.61 Ultraviolet and Visible Analyzers 1687
8.62 Viscometers—Application and Selection 1700
8.63 Viscometers—Laboratory 1708
8.64 Viscometers—Industrial 1723
8.65 Water Quality Monitoring 1744
8.66 Wet Chemistry and Autotitrator Analyzers 1755

Appendix 1765

A.1 International System of Units 1767
A.2 Engineering Conversion Factors 1777
A.3 Chemical Resistance of Materials 1799
A.4 Composition of Metallic and Other Materials 1806
A.5 Steam and Water Tables 1809
A.6 Friction Loss in Pipes 1817
A.7 Tank Volumes 1821
A.8 Directory of “Lost” Companies 1824

© 2003 by Béla Lipták

CONTRIBUTORS

The names of the authors of each edition are given at the beginning of each section. Here, all the contributors of all editions of this volume are listed in alphabetical order, showing their academic degrees, titles, and **positions they held at the time of making their contributions**. The authors who have participated in the preparation in this fourth edition of the *Instrument Engineers' Handbook (IEH)* are noted by an asterisk (*) in front of their names, but, because they built on the work of the authors of the previous editions, all authors are listed.

***BUD ADLER**	BSEE; Life Member ISA; Director, Business Development, Moore Industries-International, Inc.
ROSS C. AHLSTROM, JR.	BSCh and Math, Executive Vice President, Mentech Inc.
ARTHUR ALSTON	BS, PE, Senior Research Engineer, Chevron Research Co.
MARTIN ANKLIN	PhD, Research Scientist, Endress + Hauser, Switzerland
***RAYMOND ANNINO**	PhD, retired Professor and Researcher, formerly with The Foxboro Co.
CATHY APPLE	BSChE, Project Engineer, Micro Motion Inc.
***JAMES B. ARANT**	BSChE, PE retired Senior Consultant, formerly with E.I. du Pont de Nemours Co.
***TIBOR BAAN**	BME, CEO of Aalborg Instrument and Controls Inc.
ALLAN T. BACON, JR.	BACh, Staff Engineer, Environmental Technologies Group
***STEVEN BAIN**	BscEE, PEng, Canada
WENDALL M. BARROWS	Senior Applications Coordinator, Union Carbide Corp.
JAN BARTH	EE, MS, Manager, Industrial Instrument Users Association, The Netherlands
***ERNEST H. BAUGHMAN**	PhD, Assistant Professor, University of La Verne, California
JONAS BERGE	Engineer, Smar, Singapore
A. C. BLAKE	EE, Manager, Industrial Instrument Div., Cambridge Instrument Co.
CHRISTOPHER P. BLAKELEY	BSChE, Marketing Manager, Water Treatment, Honeywell Inc.

© 2003 by Béla Lipták

***L JOSEPH BOLLYKY**	PhD, PE, President, Bollyky Associates
R. V. BOYD, JR.	BSEE, MSEE, PE, Engineering Supervisor, Saudi Aramco
***WALT BOYES**	Principal, Marketing Practice Consultants
AUGUST BRODGESELL	BSEE, President, CRB Systems Inc.
JAMES E. BROWN	BSME, PE, Manager of Engineering, Union Carbide Corp.
THOMAS M. CARDIS	MSCh, Laboratory Manager, ABB Process Analytics
***BOYCE CARSELLA, JR.**	BA, Senior Product Manager, Magnetrol International
THOMAS J. CLAGGETT	BSEE, Application Specialist, Honeywell, Inc.
WILSON A. CLAYTON	BSChE, MSME, Chief Engineer, Hy-Cal Engineering
GERALD L. COMBS	PhDCh, Research Chemist, Applied Automation/Hartmann & Braun
VINCENT B. CORTINA	BSChE, MSIM, Business Manager, EG&G Co.
GILES M. CRABTREE	BSEE, PE, Principal Engineer, GIMACA Engineering
H. L. DANEMAN	BChE, PE, Principal, LabPlan
JOHN L. DANIEWICZ	BSEE, MA, Product Manager, TN Technologies Inc.
***RONALD H. DIECK**	BS, MS, FISA, President, Ron Dieck Associates, Inc.
LOUIS D. DINAPOLI	BSEE, MSEE, Director, Flowmeter Marketing and Technology, BIF Products of Leeds & Northrup Co.
WOLFGANG DRAHM	PhD, Research Scientist, Endress + Hauser, Germany
***WATSON P. DURDEN**	AS, Senior Engineer, Westin Engineering
***MICHAEL PAUL DZIEWATKOSKI**	PhD, Applications Manager, Metter-Toledo Ingold
***SUZANNE MARIE EDVI**	IIT, Senior Instrument Specialist, Bantrel Inc., Canada
ALBERT D. EHRENFRIED	MS in Instrumentation, President, Metritape Inc.
***HALIT EREN**	ME, MBA, PhD, Senior Lecturer, Cutin University, Australia
***GEORG F. ERK**	BSME, MSChE, PE, Consultant
JOSEF FEHRENBACH	Dipl. Ing., VEGA Grieshaber GmbH & Co., Germany
KENNETH S. FLETCHER	PhD, Technical Group Leader, Analytical Measurements, The Foxboro Co.
ALBERT P. FOUNDOS	BSChE, MBA, President, Fluid Data Inc.
WALTER F. GERDES	BSEE, PE, Technical Specialist, The Dow Chemical Co.

© 2003 by Béla Lipták

***PEDRO M. B. SILVA GIRÃO**	PhD, Professor, Instituto Superior Técnico, Lisbon, Portugal
***IAN H. GIBSON**	BSc, Dip. App. Chem., Dip. Chem. Eng, Dip. Inst. Tech., Principal Technical Specialist, Process Control Systems, Fluor, Australia
***RICHARD A. GILBERT**	BA, MS, PhD, Professor of Chemical Engineering, University of Florida
ANTHONY C. GILBY	PhD, Research Coordinator, The Foxboro Co.
PAUL M. GLATTSTEIN	BSEE, Senior Electrical Engineer, Crawford & Russell Inc.
JOHN D. GOODRICH, JR.	BSME, Engineering Supervisor, Bechtel Corp.
ROBERT J. GORDON	PhD, Environmental Division Manager, Global Geochemistry Corp.
DAVID M. GRAY	BSChE, Senior Application Specialist, Leeds & Northrup, a Unit of General Signal
***JAMES R. GRAY**	BSCh, MBA, Applications Manager, Rosemount Analytical
BHISHAM P. GUPTA	BSME, MSME, PhD, PE, Specialist Supervisor, Saudi Aramco
JOHN T. HALL	BS, Senior Technical Editor, Instrument & Control Systems
CHARLES E. HAMILTON	BSChE, Senior Environmental Specialist, The Dow Chemical Co.
JOHN N. HARMAN III	BSCh, MSCh, PE, Senior Project Engineer, Beckman Instruments
***HASHEM M. HASHEMIAN**	MSNE, President, Analysis and Measurement Services Corp.
ROBERT A. HERRICK	BSChE, PE, Consulting Engineer
HEROLD I. HERTANU	MSEE, PE, Senior Vice President, Advanced Engineering Concepts Inc.
CONRAD H. HOEPPNER	BSEE, MSEE, Consultant, Simmons Precision Products Inc.
MICHAEL F. HORDESKI	BSEE, MSEE, PE, Control System Consultant, Siltran Digital
JOEL O. HOUGEN	PhDChE, PE, Consultant, Professor Emeritus, University of Texas
WALTER D. HOULE	BSEE, President, Automation Management International
WILFRED H. HOWE	BSEE, MBA, PE, Chief Engineer, The Foxboro Co.
DAVID L. HOYLE	BSChE, System Design Engineer, The Foxboro Co.
JAY S. JACOBSON	PhD, Plant Physiologist, Boyce Thomson Institute for Plant Research
RAJSHREE R. JAIN	BSChE, Applications Engineer, Capital Controls Co.
ROBERT F. JAKUBIK	BSChE, Manager, Process Control Applications, Digital Applications Inc.
***JAMES E. JAMISON**	BSc-ChE, PE, Technical Director, Instrumentation and Process Control Systems, VECO (Canada) Ltd.

© 2003 by Béla Lipták

***JOHN M. JARVIS**	PhD, Manager of Gas Products Engineering, Detector Electronics
HERBERT H. JONES	BS, Principal Applications Engineer, Beckman Instruments Inc.
RICHARD K. KAMINSKI	BA, Senior Instrument Designer, Dravo Engineers and Constructors
DAVID S. KAYSER	BSEE, Senior Instrument Engineer, Texas City Refining Inc.
THOMAS J. KEHOE	BSChE, PE, Manager, Technical Services, Beckman Instruments Inc.
TAMÁS KEMÉNY	ME, EE, PhD, Secretary General, IMEKO International Measurement Confederation, Hungary
CHANG H. KIM	BSChE, Manager, Technical Services, ARCO Chemical Co.
JOHN G. KOCAK, JR.	BA, Consultant
JOHN G. KOPP	BSME, PE, Senior Product Marketing Manager, Fischer & Porter Co.
JOSEF KOZÁK	PhD, Aeronautical Research and Test Institute, Czech Republic
***CULLEN G. LANGFORD**	BSME, PE, ISA Fellow, Consultant, Cullen G. Langford Inc.
GEORGE R. LEAVITT	BSME, PE, Consultant
***MARIA T. LEE-ALVAREZ**	PhD, Physical Science Teacher, Cincinnati Public School District
***DAVID LEWKO**	Senior Analyzer Specialist, Bantrel Co.
TRUMAN S. LIGHT	BSCh, MSCh, PhDCh, Consultant
***BÉLA G. LIPTÁK**	MME, PE, ISA Fellow, Consultant, inducted into Control Process Automation Hall of Fame in 2001
DAVID H. F. LIU	BSc, MS, PhD, Principal Scientist, J. T. Baker Inc.
***ANDREW J. LIVINGSTON**	BS, MBA, Nuclear Product Manager, Ohmart Vega
HARRY E. LOCKERY	BSEE, MSEE, PE, President, Hottinger-Baldwin Measurements Inc.
DAVID J. LOMAS	Marketing Support Executive, Kent Process Control Ltd.
ORVAL P. LOVETT, JR.	BSCE, Consulting Engineer, Instruments and Control Systems, I. E. du Pont de Nemours Co.
JIRÍ LUKAS	MSC, Scientific Worker, Aeronautical Research and Test Institute of Czech Republic
***JULES J. MAGDA**	PhD, ChE, Associate Professor, Dept. of Chemical and Fuels Engineering, University of Utah
DAVID C. MAIR	BCE, PE, Manager, Sales Services, Wallace & Tiernan Div. of Pennwalt Corp.
***RAMASAMY MANOHARAN**	PhD, Manager of Sensor Technology, Rosemount Analytical Inc.

© 2003 by Béla Lipták

FRED D. MARTIN BS, Analyzer Consultant, Fluid Data, Amscor

THOMAS A. MAYER BSE, MSE, PE, Senior Development/Research Engineer, PPG Industries

GERALD F. McGOWAN BSEE, MSEE, Vice President of Engineering, Lear Siegler Inc.

GREGORY K. McMILLAN BSEPhys, MSEE, Fellow, Monsanto Chemical Co.

***DEAN MILLER** BSME, MBA, Manager of Pressure Relief and Tooling Engineering, Fike Corp.

HUGH A. MILLS ME, President, Macran Products

CHARLES F. MOORE BSChE, MSChE, PhDChE, Professor of Chemical Engineering, University of Tennessee

***LEONARD W. MOORE** PE, President and CEO of Moore Industries International Inc.

***GERHARD MURER** Dipl. Eng., Manager of Anton Paar GmbH, Austria

THOMAS J. MYRON, JR. BSChE, Senior Systems Design Engineer, The Foxboro Co.

***JAMES A. NAY** PE, BSME, Consultant, Retired

S. NISHI DSc. Research Scientist, National Chemical Laboratory for Industry, Japan

ROBERT NUSSBAUM BSEE, Senior Instrument Engineer, Crawford & Russell Inc.

***DAVID S. NYCE** BSEE, MBA, Director of Technology at MTS Systems Corp.

RICHARD T. OLIVER BSChE, MSChE, PhDChE, Senior Design Engineer, The Foxboro Co.

WILLIAM H. PARTH BS, MS, Senior Instrument Specialist, The Dow Chemical Co.

***SIMON J. PATE** B. Eng., Director of Projects & Systems, Detector Electronics Corp.

***ALMONT V. PAWLOWSKI** BSEE, CSST, PE, Research Associate at Louisiana State University

KENNETH A. PERROTTA BSCh, Vice President of Technology, Balston Inc.

KURT O. PLACHE BSChE, PE, Vice-President Marketing, Micro-Motion Inc.

GEORGE PLATT BSChE, PE, Staff Engineer, Bechtel Power Corp.

DANIEL E. PODKULSKI BSChE, Senior Instrument Engineer, Chevron Research & Technology

MICHAL PTÁCNÍK PhD, Aeronautical Research and Test Institute, Czech Republic

DIETER RALL BSME, MSME, PE, General Manager, Trans-Met Engineering Inc.

M. RAZAQ PhD, Senior Scientist, Teledyne Analytical Instrument Co.

***MORTON W. REED** PE, PhD, Consultant

JAMES B. RISHEL BSME, President, Corporate Equipment

© 2003 by Béla Lipták

HOWARD C. ROBERTS	BAEE, PE, Consultant
***JACK C. RODGERS**	PE, Vice President of Nuclear Business at Ohmart/VEGA
***JOHN B. ROEDE**	ME, Senior Application Consultant, AMETEK-Drexelbrook
***ALBERTO ROHR**	EE, Dr. Eng., Consultant, Vedano al Lambro (MI), Italy
LEWIS B. ROOF	BS, MS, Senior Measurement Engineer, Applied Automation Inc.
GREGORY J. RORECH	BSChE, PE, Principal Engineer, Geraghty & Miller Inc.
STEPHAN RUDBÄCH	MSc, President, Matematica AB, Sweden
***ROBERT S. SALTZMAN**	BS, Eng. Phys., Principal of Bob Saltzman Associates
***GARY C. SANDERS**	BSEE, MT, FICMT, Director of Engineering Tyco Valves & Controls — Penberthy
ERIC J. SCHAFFER	BSEE, MSEE, Project Engineer, MST Systems Corp.
***NARESH K. SETHI**	BS, PhD, Technical Team Leader, BP South, Houston, Texas
***ROBERT E. SHERMAN**	BSCh, MSCh, MSBA
DONALD J. SIBBETT	PhD, Vice President, Geomet Inc.
ROBERT SIEV	BSChE, MBA, CE, Engineering Specialist, Bechtel Corp.
MIKHAIL SKLIAR	PhD ChE, Associate Professor, Dept. of Chemical and Fuels Engineering, University of Utah
***KENNETH C. SLONEKER**	BSME, V.P., Laboratory Director, Electronic Development Laboratories Inc.
RALPH G. SMITH	BS, MS, PhD, Professor, University of Michigan
***ROBERT J. SMITH II**	BSEET, Plant Engineer at Rock-Tenn Co.
JOAN B. STODDARD	PhD, President, Stoddard Productivity Systems Inc.
RICHARD STRAUSS	BSChE, MSChE, Consultant
EUGENE L. SZONNTAGH	MSChE, PhD, PE, Consultant
***JAMES F. TATERA**	BS, MBA, Senior Process Analysis Consultant, Tatera Associates Inc.
EDWARD TELLER	PhD, Professor-at-Large, University of California
AMOS TURK	PhD, Professor of Chemistry, City University of New York
***ALAN H. ULLMAN**	BS (Chemistry), PhD, Senior Scientist at The Procter & Gamble Co.
***IAN VERHAPPEN**	BscEnv, BScCh, PE, Engineering Associate at Syncrude Canada Ltd.
MICHAEL VUJICIC	PE, Director, Industrial Products, Optech Inc.

© 2003 by Béla Lipták

WILLIAM H. WAGNER BSChE, PE, Staff Engineer at Union Carbide Corp.

***MICHAEL H. WALLER B** ME, SM, ME, Professor at Miami University

WILLEM M. WALRAVEN ME, M&CE, Head of Evaluation Department Netherlands Organization for Applied Research

NORMAN S. WANER BSME, MSME, ME, PE, Manager of Training and Development, Bechtel Corp.

JOHN V. WELCH BSME, MBA, Market Specialist at MKS Instruments Inc.

ALAN L. WERTHEIMER PhD, Principal Scientist, Leeds & Northrup Co.

GEORGE P. WHITTLE BSChE, MSChE, PhDChE, PE, Associate Professor, University of Alabama

THEODORE J. WILLIAMS BS, MSChE, MSEE, PhD, PE, Professor of Engineering, Director of Purdue Laboratory for Applied Industrial Control

ROBERT W. WORRALL BA, PE, Principal Instrument Engineer, Catalytic Inc.

IRVING G. YOUNG BS, MS, PhD, Chemist, Advanced Technology Staff, Honeywell Inc.

***JESSE L. YODER** PhD, President, Flow Research

© 2003 by Béla Lipták

INTRODUCTION

Ours is a very young profession: when the first edition of the *Instrument Engineers' Handbook (IEH)* came out, Marks' *Mechanical Engineers' Handbook* was in its fifth edition, and Perry's *Chemical Engineers' Handbook* was in its sixth! Now, as we are starting to work on the fourth edition of the *IEH*, we are already in a new millenium. But while our profession is young, we are also unique and special.

After all, no other engineering profession can claim what we can! No other engineering profession can offer to increase the GDP by $50 billion without building a single new plant, and to do that while *increasing* safety and *reducing* pollution. We can do that! We can achieve that goal solely through the optimization of our existing industries. We can increase productivity without using a single pound of additional raw material, without needing a single additional BTU.

THIS FOURTH EDITION

During the nearly four decades of its existence, the *IEH* has become the most widely used reference source of the instrumentation and control (I&C) engineering profession. During this same period, the tools of our I&C profession have changed as control systems were transformed from the early mechanical and pneumatic ones to today's electronic and digital implementations.

During this period, even the name of our profession has changed. Today, some call it *automation*, while others refer to it by a variety of other names, including *instrumentation, process control, I&C,* and *computer automation*. Yet, while we have not been able to agree even on the name of our profession, our experience and our knowledge of control principles has penetrated all the fields of modern science and technology. I hope that the three volumes of the *IEH* have played a major role in spreading this knowledge and understanding.

In 1968, this handbook started out as a three-volume reference set, and, in that respect, no change has occurred. The first volume deals with measurement, the second with control, and the third with digital networks and software systems.

CONTENTS OF THE *IEH* VOLUMES

In this, the first volume, a chapter is devoted to each major measured variable, and a subchapter (section) is devoted to each different method of making that measurement. Some measurements are relatively simple as, for example, the detection of level; therefore, that chapter has only 21 sections. Others, such as analysis, are more varied, and that chapter has 66 sections.

The individual sections (subchapters) begin with a *flowsheet symbol* and a *feature summary.* This summary provides quick access to specific information on the available sizes, costs, suppliers, ranges, and inaccuracies of the devices covered in that section.

This fourth edition updates the information content of the previously published sections, incorporates the new developments of the last decade by the addition of new sections, and broadens the horizons of the work from an American to a global perspective.

In this first volume, *Process Measurement and Analysis*, the emphasis is on measurement hardware, including the detection of flow, level, temperature, pressure, density, viscosity, weight, composition, and safety sensors.

The second volume of this set, *Process Control*, covers control hardware, including transmitters, controllers, control valves, and displays, and it provides in-depth coverage to the theory of control and explains how the unit processes of pumping, distillation, chemical reaction, heat transfer, and many others are controlled.

The third volume is devoted to *Process Software and Digital Networks*. In combination, the three volumes cover all the topics used by process control or instrument engineers.

READERS OF THE *IEH*

Experienced process control engineers are likely to use this reference set either to obtain quick access to specific information or to guide them in making selections. Less experienced engineers and students of instrument engineering are

© 2003 by Béla Lipták

likely to use this reference work as a textbook. A student might use it to learn about the tools of our profession.

To fulfill the expectations of both the experienced and the beginning engineer, the handbook has been structured to be flexible. On one hand, it contains all the basic information that a student needs, but it also covers the most recent advances and provides quick and easy access to both types of information. Quick access to specific topics and information is provided both by the *feature summary* at the beginning of each section and by an extensive index at the end of each volume.

BIRD'S EYE VIEWS: ORIENTATION TABLES

Another goal of this reference set is to assist the reader in selecting the best sensors for particular applications. To achieve this goal, each chapter begins with a section that provides an application- and selection-oriented overview along with an *orientation table*.

The orientation tables list all the sensors that are discussed in the chapters and summarize the features and capabilities of each. If the reader is using this handbook to select a sensor for a particular application, the orientation table allows the narrowing of the choices to a few designs.

After the options have been reduced, the reader might turn to the corresponding sections and, based on the information in the *feature summaries* at the front of each section, decide if the costs, inaccuracies, and other characteristics meet the requirements of the application. If so, the reader might focus in on the likely candidate and read all the information in the selected section.

NEW NEEDS AND EXPECTATIONS

As I was editing this reference set for the fourth time, I could not help but note the nature of both the new solutions and the new needs of the process control industry.

The new solutions become obvious as you review the contents of the 400 to 500 sections of the 25 or so chapters of this set of handbooks. The new needs are not so obvious. The new needs are the consequences of the evolution of new hardware, new software, and the completely new technologies that have evolved. These needs become obvious only if one is immersed in the topic to the depth and for the duration that I have been. It might speed technological progress if some of these needs are mentioned here.

INTERNATIONAL STANDARDIZATION

In earlier decades, it took some time and effort to agree on the 3 to 15 PSIG (0.2 to 1.0 bar) signal pressure range for the standard pneumatic or on the 4 to 20 mA DC standard analog electronic signal range. Yet, when these signal ranges were finally agreed upon, everybody benefited from having a standard signal.

Similarly, the time is ripe for adopting a worldwide standard for *a single digital communication protocol*. The time is ripe for an internationally accepted digital protocol that could link all the digital "black boxes" and could also act as the "translator" for those that were not designed to "speak the same language." In so doing, the valuable engineering energies that today are being spent to figure out ways for black boxes to communicate could be applied to more valuable tasks, such as increasing the productivity and safety of our processing industries. Optimization can make our industries competitive once again and contribute not to the export of jobs but to the creation of jobs at home.

MEANINGFUL PERFORMANCE STANDARDS

It is also time to rein in the commercial interests and to impose uniform expectations so that all sales literature will provide performance data in the same form. In today's sales literature, the performance-related terms such as *inaccuracy* and *rangeability* are rarely defined properly.

Such terms as "inaccuracy" are frequently misstated as "accuracy," and sometimes the error percentages are given without stating whether they are based on full-scale or actual readings. It is also time for professional societies and testing laboratories to make their findings widely available so that test results can be used to compare the products of different manufacturers.

It is also desirable to have the manufacturers always state not only the inaccuracy of their products but also the rangeability over which that inaccuracy statement is valid. Similarly, it would be desirable if *rangeability* were defined as the ratio between those (maximum and minimum) readings for which the inaccuracy statement is valid.

It would also be desirable to base the inaccuracy statements on the performance of at least 95% of the sensors tested and to include in the inaccuracy statement not only linearity, hysteresis, and repeatability, but also the effects of drift, ambient temperature, overrange, supply voltage, humidity, radio frequency interference (RFI), and vibration.

BETTER VALVES

The performance capabilities of final control elements should also be more uniformly agreed upon and more reliably stated. This is particularly true for the characteristics, gains, and rangeabilities of control valves. For example, a valve should be called linear *only* if its gain (Gv) equals the maximum flow through the valve (Fmax) divided by the valve stroke in percentage (100%).

Valve manufacturers should publish the stroking range (minimum and maximum percentages of valve openings) within which the gain of a linear valve is still Fmax/100%.

© 2003 by Béla Lipták

Valve rangeability should be defined as the ratio of these minimum and maximum valve openings. Other valve characteristics should also be defined by globally accepted standards in this same manner.

"SMARTER" SENSORS AND ANALYZERS

In the case of transmitters, the overall performance is largely defined by the internal reference used in the sensor. In many cases, there is a need for multiple-range and multiple-reference units. For example, pressure transmitters should have both atmospheric and vacuum references and should have sufficient intelligence to switch automatically from one to the other reference on the basis of their own measurement. Similarly, d/p flow transmitters should have multiple spans and should have the intelligence to automatically switch their spans to match the actual flow as it changes.

The addition of "intelligence" could also increase the amount of information gained from such simple detectors as pitot tubes. If, for example, in addition to detecting the difference between static and velocity pressures, the pitot tube were also able to measure the Reynolds number, it would be able to approximate the shape of the velocity profile. An "intelligent pitot-tube" of such capability could increase the accuracy of volumetric flow measurements.

IMPROVED ON-LINE ANALYZERS

In the area of continuous on-line analysis, further development is needed to extend the capabilities of probe-type analyzers. The needs include the changing of probe shapes to achieve self-cleaning or using "flat tips" to facilitate cleaning. The availability of automatic probe cleaners should also be improved, and their visibility should be increased by the use of sight flow indicators.

An even greater challenge is to lower the unit costs of fiber-optic probes through multiplexing and by sharing the cost of their electronics among several probes. Another important goal for the analyzer industry is to produce devices that are self-calibrating, self-diagnosing, and modular in design. To reduce the overall cost of analyzer maintenance, defective modules should identify themselves and should be easily replaceable.

EFFICIENCY AND PRODUCTIVITY CONTROLLERS

In the area of control, what is most needed is to move from the uncoordinated single loops to optimizing, multivariable envelope, and matrix algorithms. When using such multivariable envelopes, the individual levels, pressures, and temperatures become only constraints, while the overall multivariable envelope is dedicated to maximizing the efficiency or productivity of the controlled process.

In this sense, most of today's digital controls are still only "empty boxes." New software packages are needed to "educate" and to give "personality" to them. Software is needed that, when loaded, will transform a general-purpose unit controller into an advanced and optimized control system serving the particular process, whether it is a chemical reactor, a distillation tower, a compressor, or any other unit operation.

This transformation in the building blocks of control systems would also make the manufacturing of digital control hardware more economical, because all "empty boxes" could be very similar.

UNIT OPERATION CONTROLLERS

The use of such multipurpose hardware could also provide more flexibility to the user, because a unit controller that was controlling a dryer, for example, could be switched to control an evaporator or a pumping station just by loading a different software package into it. Once the particular software package was loaded, the unit controller would require customization only, which could be done in a menu-driven question-and-answer format.

During the customization phase, the user would answer questions on piping configuration, equipment sizes, material or heat balances, and the like. Such customization software packages would automatically configure and tune the individual loops and would make the required relative gain calculations to minimize interaction between loops. It will probably take a couple decades to reach these goals, but to get there, it is necessary to set our sights on these goals now.

COMMON SENSE RECOMMENDATIONS

While talking about such sophisticated concepts as optimized multivariable control, it is very important to keep our feet on the ground, keep in mind that the best process control engineer is still Murphy, and remember that, in a real plant, even Murphy can turn out to be an optimist. For that reason, I list the following common sense, practical advice, and recommendations:

- Before one can control a process, one must fully understand it.
- Being progressive is good, but being a guinea pig is not.
- If an outdated control strategy is implemented, the performance of even the latest digital hardware will be outdated.
- Increased safety is gained through the use of multiple sensors, configured through voting systems or median selectors.
- If an instrument is worth installing, it should also be worth calibrating and maintaining.

© 2003 by Béla Lipták

- Constancy is the enemy of efficiency; as the load and feed compositions float, the process variables should also be allowed to change with them.
- Control loops can be stabilized by replacing their single set points with control gaps.
- Annunciators do not correct emergencies, they just report problems that the designer did not know how to handle and therefore decided to drop into the laps of the operators. The smaller the annunciator, the better the control system design.
- A good process control engineer will tell the user what he needs to know and not what he wants to hear. The right time for business lunches is not before receiving the purchase order, but after the plant has started up and is running.

HISTORY OF THE HANDBOOK

The birth of this handbook was connected to my own work. In 1962, at the age of 26, I became the chief instrument engineer at Crawford & Russell, an engineering design firm specializing in the building of plastics plants. C&R was growing, and my department had to grow with it. Still, at the age of 26, I did not dare to hire experienced people, because I did not believe that I could lead and supervise older engineers.

But the department had to grow, so I hired fresh graduates from the best engineering colleges in the country. I picked the smartest graduates, and I obtained permission from C&R's president, Sam Russell, to spend every Friday afternoon teaching them. In a few years, not only did my department have some outstanding process control engineers, C&R also saved a lot on their salaries.

By the time I reached 30, I felt secure enough to stop disguising my youth. I shaved off my beard and threw away my thick-rimmed, phony eyeglasses. I no longer felt that I had to look older, but my Friday's notes remained—they still stood in a two-foot high pile on the corner of my desk.

"DOES YOUR PROFESSION HAVE A HANDBOOK?"

In the mid-1960s, an old-fashioned Dutch gentleman named Nick Groonevelt visited my office and asked, "What is that pile of notes?" When I told him, he asked: "Does your profession have a handbook?"

"If it did, would I be teaching from these notes?" I answered with my own question. (Actually, I was wrong in giving that answer, because Behar's *Handbook of Measurement and Control* was already available, but I did not know about it.)

"So, let me publish your notes, and then instrument engineers will have a handbook!" Nick proposed, and in 1968 the first edition of the *Instrument Engineers' Handbook (IEH)* was published.

In 1968, the Soviet tanks (which I fought in 1956) were besieging Prague, so I decided to dedicate the three volumes of the *IEH* to the Hungarian and Czech freedom fighters. A fellow Hungarian-American, Edward Teller, wrote the preface to the first edition, and Frank Ryan, the editor of *ISA Journal*, wrote the introduction.

My coauthors included such names as Hans Baumann, Stu Jackson, Orval Lovett, Charles Mamzic, Howard Roberts, Greg Shinskey, and Ted Williams. It was an honor to work with such a team. In 1973, because of the publication of the first edition of the *IEH*, I was elected the youngest ISA fellow ever.

LATER EDITIONS

By the end of the 1970s, the world of process control had changed. Pneumatics were on the way out, and new approaches, such as distributed control systems (DCS) and on-line analyzers, proliferated. It was time to revise the handbook. By 1975, I also had to run my own consulting office, so I could not devote my full attention to updating the handbook.

Therefore, I hired Kriszta Venczel to do most of the work, and she did her best by inserting metric units and the like. We got some excellent new contributions, from Ed Farmer, Tom Kehoe, Thomas Myron, Richard Oliver, Phillip Schnelle, Mauro Togneri, and Theodore Williams. The second edition was published in 1982. It was well received, but I knew that it would have been better if I had devoted more time to it.

By the mid-1990s, the handbook was ready for another updating edition. By that time, the process control market was becoming globalized, "smart" instruments had evolved, and such hardware inventions as fiber-optic probes and throttling solenoid valves proliferated. Therefore, I stopped teaching at Yale and cut back on consulting to make time to edit the third edition.

By the second half of the 1990s, the first two volumes of the third edition, one on measurement and the other on control, were published. At that time, I realized that a third volume was also needed to cover all of the evolving digital software packages, communication networks, buses, and optimization packages. Therefore, it took the last decade of the twentieth century to publish the three volumes of the third edition.

THE FOURTH EDITION

Work on the fourth edition of the *IEH* started in the new millenium, and this first volume on measurement and analysis is the result of this effort. I do hope that, in three to five years, you might hold all three updated *IEH* volumes in your hands. Now that the fourth edition of the *Measurement and Analysis*

© 2003 by Béla Lipták

volume has been published, I am starting work on the second volume, which is devoted to *process control*.

This second volume will cover control hardware, including transmitters, controllers, control valves, and displays, and it provides in-depth coverage of both control theory and how the unit processes of pumping, distillation, chemical reaction, heat transfer, and many others are controlled and optimized. My main goal is to expand this last area by both increasing the list of unit operations that we cover and, more importantly, by giving much more emphasis to optimization.

WHY DON'T YOU PITCH IN?

I would like to ask you to help me locate the best experts on all five continents for each important unit operation in our processing industries. If you have spent a lifetime learning and understanding the unique personality of a process and have figured out how to maximize its efficiency, don't keep that knowledge to yourself—share it with us.

If you or one of your colleagues would like to participate as a coauthor, please send me an e-mail, and I will send you the table of contents (TOC) of the control volume. If the topic of your interest is not in the TOC, we can add it; if it is, I will consider your offer to update the material that has already appeared in the third edition.

Please understand that I am not looking for people with writing skills, I am looking for engineers with knowledge and experience! This is not to say that I will reject college professors; naturally, I will not, although I might delete some of their differential equations and bring them down from the frequency domain back into the time domain. Similarly, I will consider the contributions of professional consultants if they do not view the *IEH* as a forum for self-promotion. I will also consider manufacturers as coauthors if they are able to be balanced and are willing to give credit where credit is due, even if it means crediting their competition.

But my favorite coauthor is the plant engineer who is short on words but long on experience. I do not mind getting answers such as, "I don't know if this is conductivity or ultrasonics, all I know is that it works!" The *IEH* is written by users and for users, and it is not about fancy packaging—it is about content. So don't worry about your writing skills, I can help with that. Please help make the fourth edition of the *IEH* one we can be proud of. Please drop me an e-mail if you want to pitch in.

We know that there is no greater resource than the combined knowledge and professional dedication of a well educated new generation. We live in an age in which technology can make a difference in overcoming the social and environmental ills on this planet. We live in an age in which an inexhaustible and nonpolluting energy technology must be developed. It is hoped that this handbook will make a contribution toward these goals and that, in addition, it will improve the professional standing of instrument and process control engineers around the world.

Béla Lipták
Stamford, Connecticutt
(*liptakbelaieh4@aol.com*)

© 2003 by Béla Lipták

DEFINITIONS

ABSOLUTE (DYNAMIC) VISCOSITY (μ) Constant of proportionality between applied stress and resulting shear velocity (Newton's hypothesis).

ABSORBANCE (A) Ratio of radiant energy absorbed by a body to the corresponding absorption of a blackbody at the same temperature. Absorbance equals emittance on bodies whose temperature is not changing. (A = 1 – R – T, where R is the reflectance and T is the transmittance.)

ABSORPTION The taking in of a fluid to fill the cavities in a solid.

ACCUMULATION The pressure increase over the maximum allowable working pressure of a tank or vessel during discharge through the pressure relief valve. It is given either in percentage of the maximum allowable working pressure or in pressure units such as bars or pounds per square inch.

ADMITTANCE (A) The reciprocal of the impedance of a circuit. Admittance of an AC circuit is analogous to the conductance of a DC circuit. Expressed in units of Seimens.

ADSORPTION The adhesion of a fluid in extremely thin layers to the surfaces of a solid.

ALPHA CURVE The relationship between the resistance change of an RTD vs. temperature. In the European alpha curves, the alpha value is 0.00385 Ω/°C; in the American curves, it is 0.00392 Ω/°C.

AMPACITY The current (amperes) a conducting system can support without exceeding the temperature rating assigned to its configuration and application.

AMPEROMETRIC TITRATION Titration in which the end point is determined by measuring the current (amperage) that passes through the solution at a constant voltage.

AMPEROMETRY The process of performing an amperometric titration. The current flow is monitored as a function of time between working and auxiliary electrodes while the voltage difference between them is held constant; in other designs, the current is monitored as a function of the amount of reagent added to bring about titration of an analyte to the stoichiometrically defined end point. Also called constant *potential voltametry.*

APPARENT VISCOSITY Viscosity of a non-Newtonian fluid under given conditions. Same as consistency.

ATTENUATION Loss of communication signal strength.

BACKPLANE Physical connection between individual components and the data and power distribution buses inside a chassis.

BACKPRESSURE Pressure on the discharge side of a pressure relief valve. This pressure is the sum of the superimposed and the built-up backpressures. The superimposed backpressure is the pressure that exists in the discharge piping of the relief valve when the valve is closed.

BALANCED SAFETY RELIEF VALVE A safety relief valve with the bonnet vented to atmosphere. The effect of backpressure on the performance characteristics of the valve (set pressure, blow-down, and capacity) is much less than on the conventional valve. The balanced safety relief valve is made in three designs: (1) with a balancing piston, (2) with a balancing bellows, and (3) with a balancing bellows and an auxiliary balancing piston.

BALLING DEGREES Unit of specific gravity used in the brewing and sugar industries.

BALUN (BALANCED/UNBALANCED) A device used for matching characteristics between a balanced and an unbalanced medium.

BANDPASS FILTER An optical or detector filter that permits the passage of a narrow band of the

© 2003 by Béla Lipták

total spectrum. It excludes or is opaque to all other wavelengths.

BANDWIDTH Data-carrying capacity; the range of frequencies available for signals. The term is also used to describe the rated throughput capacity of a given network medium or protocol.

BARKOMETER DEGREES Unit of specific gravity used in the tanning industry.

BASEBAND A communication technique whereby only one carrier frequency is used to send one signal at a time. Ethernet is an example of a baseband network; also called *narrowband*; contrast with *broadband*.

BAUMÉ DEGREES A unit of specific gravity used in the acid and syrup industries.

BLACKBODY The perfect absorber of all radiant energy that strikes it. The blackbody is also a perfect emitter. Therefore, both its absorbance (A) and emissivity (E) are unity. The blackbody radiates energy in predictable spectral distributions and intensities that are a function of the blackbody's absolute temperature (Figure 4.11a). A blackbody can be configured as shown in Figure 4.11b.

BLOWDOWN (BLOWBACK) The difference between the set pressure and the reseating (closing) pressure of a pressure relief valve, expressed in percent of the set pressure, bars, or pounds per square inch.

BOLOMETER Thermal detector which changes its electrical resistance as a function of the radiant energy striking it.

BONDING The practice of creating safe, high-capacity, reliable electrical connectivity between associated metallic parts, machines, and other conductive equipment.

BRIGHTNESS PYROMETER This device uses the radiant energy on each side of a fixed wavelength of the spectrum. This band is quite narrow and usually centered at 0.65 μm in the orange-red area of the visible spectrum.

BRITISH THERMAL UNIT (BTU) The amount of heat required to raise the temperature of 1 lb of water by 1°F at or near 60°F.

BRIX DEGREE A specific gravity unit used in the sugar industry.

BROADBAND A communication technique that multiplexes multiple independent signals simultaneously, using several distinct carriers. A common term in the telecommunications industry to describe any channel having a bandwidth greater than a voice-grade channel (4 kHz). Also called *wideband*. Contrast with *baseband*.

BTU "DRY" This is the heating value that is expressed on a "dry basis." The common assumption is that pipeline gas contains 7 lb (or less) of water vapor per million standard cubic feet.

BTU "SATURATED" This is the heating value that is expressed on the basis of the gas being saturated with water vapors. This state is defined as the condition when the gas contains the maximum amount of water vapors without condensation, when it is at base pressure and 60°F.

BUILT-UP BACKPRESSURE Variable backpressure that develops as a result of flow through the pressure relief valve after it opens. This is an increase in pressure in the relief valve's outlet line caused by the pressure drop through the discharge headers.

BURNING Burning is when the flame does not spread or diffuse but remains at an interface where fuel and oxidant are supplied in proper proportions.

CAPACITANCE (C) The amount of charge, in coulombs, stored in a system necessary to raise the potential difference across it by 1 V, represented in the SI unit *farad*.

CAPACITOR DEVICE This device consists of two conductors electrically isolated by an insulator. The conductors are called *plates*, and the insulator is referred to as the *dielectric*. The larger the capacitor, the smaller its impedance and the more AC current will flow through it.

CHARACTERISTIC IMPEDANCE The impedance obtained from the output terminals of a transmission line that appears to be infinitely long, when there are no standing waves on the line and the ratio of voltage to current is the same for each point of the line (nominal impedance of a waveguide).

CHATTER Rapid, abnormal reciprocating variations in lift during which the disc contacts the seat.

CHRONOPOTENTIOMETRY Process in which the potential difference between a metallic measuring electrode and a reference electrode is monitored as a function of time. At the measuring electrode, an oxidation or reduction of a solution species takes place.

CLOSING PRESSURE (RESEAT PRESSURE) The pressure, measured at the valve inlet, at which the valve closes, flow is substantially shut off, and there is no measurable lift.

© 2003 by Béla Lipták

COAX Jargon meaning *coaxial cable*, consisting of a center wire surrounded by low-K insulation, surrounded by a second, shield conductor. It has the characteristic of low capacitance and inductance to facilitate transmission of high-frequency current.

COLD DIFFERENTIAL TEST PRESSURE (CDTP) The pressure at which the PRV is adjusted to open during testing. The CDTP setting includes the corrections required to consider the expected service temperature and backpressure.

COMBUSTION AIR REQUIREMENT INDEX (CARI) This dimensionless number indicates the amount of air required (stoichiometrically) to support the combustion of a fuel gas. Mathematically, the combustion air requirement index is defined by the equation below:

$$\text{CARI} = \frac{\text{air/fuel ratio}}{\sqrt{\text{s.g.}}}$$

CONDUCTANCE (G) The reciprocal of resistance in units of Siemens (S, formerly *mhos*).

CONDUCTIVITY (g) The reciprocal of resistivity. All solids and liquids have some degree of conductivity. For the purpose of this section, any material above 1 μS/cm will be considered to be conductive (including most metals and water containing any ions).

CONSISTENCY Resistance of a substance to deformation. It is the same as viscosity for a Newtonian fluid and the same as apparent viscosity for a non-Newtonian fluid.

CONSTANT BACKPRESSURE Backpressure that does not change under any condition of operation, whether the pressure relief valve is closed or open.

CONVENTIONAL SAFETY RELIEF VALVE A safety relief valve with the bonnet vented either to atmosphere or internally to the discharge side of the valve. The performance characteristics (set pressure, blowdown, and capacity) are directly affected by changes of the backpressure on the valve.

COULOMETRY Process of monitoring analyte concentration by detecting the total amount of electrical charge passed between two electrodes that are held at constant potential or when constant current flow passes between them.

CPVC Chlorinated polyvinyl chloride, a low-cost, reasonably inert polymer, used in the construction of some noninsertion sensors. It is easily solvent welded. The maximum temperature range is up to about 225°F.

CRYSTALLOGRAPHY How atoms are arranged in an object; the direct relationship between these arrangements and material properties (conductivity, electrical properties, strength, etc.).

CURIE (CI) A unit of radiation source size corresponding to 37 billion disintegrations per second.

DATA SERVERS A standard interface to provide data exchange between field devices and data clients.

DEAD BAND The range through which an input can be varied without causing a change in the output.

DEFLAGRATION OR EXPLOSION A process in which a flame front advances through a gaseous mixture at subsonic speeds.

DEIONIZED Refers to water of extremely high purity, with few ions to carry current. If exposed to air for any significant period, it will have a conductivity of about 5 μS/cm because of dissolved CO_2.

DEMULTIPLEXING Separation of multiple input streams that were multiplexed into a common physical signal back into multiple output streams.

DESIGN PRESSURE This pressure is equal to or less than the maximum allowable working pressure. It is used to define the upper limit of the normal operating pressure range.

DETONATION A process in which the advancement of a flame front occurs at supersonic speeds.

DEVICE DESCRIPTION A clear, unambiguous, structured text description that allows full utilization/operation of a field device by a host/master without any prior knowledge of the field device.

DEW POINT Saturation temperature of a gas–water vapor mixture.

DIELECTRIC An electrical insulator (includes metal oxides, plastics, and hydrocarbons).

DIELECTRIC COMPENSATION A scheme by which changes in insulating liquid composition or temperature can be prevented from causing any output error. Requires a second sensor and homogeneous liquid. A dielectric is a material that is an electrical insulator or in which an electric field can be sustained with a minimum of dissipation of power.

DIELECTRIC CONSTANT A unit expressing the relative charge storage capability of various insulators. Full vacuum is defined as 1.0, and all gases are indistinguishable for practical

© 2003 by Béla Lipták

purposes. TFE has a dielectric constant of 2.0, cold water about 80. There are no related units, because this is the ratio of absolute dielectric constant to that of vacuum. The dielectric values of selected materials are given in Tables 3.3q and 3.14a.

DIODE A two-terminal electronic (usually semiconductor) device that permits current flow predominantly in only one direction.

DISCONTINUITY An abrupt change in the shape (or impedance) of a waveguide (creating a reflection of energy).

DUST-IGNITION-PROOF Enclosed in a manner to exclude ignitable amounts of dust or amounts that might affect performance. Enclosed so that arcs, sparks, and heat otherwise generated or liberated inside of the enclosure will not cause ignition of exterior accumulations or atmospheric suspensions of dust.

EFFECTIVE COEFFICIENT OF DISCHARGE This is a coefficient used to calculate the minimum required discharge area of the PRV.

ELECTROCHEMICAL PROCESS The changes in voltage or current flow that occur between two electrodes in a solution (electrolyte) over time. The oxidation or reduction of the analyte provides data related to concentration.

ELECTROLYTIC PROBE A probe that is similar to a galvanic probe, except that a potential is applied across the electrodes, and the electrodes are not consumed. Dissolved oxygen detection is a primary application of this type of probe.

ELECTROMAGNETIC WAVE (ENERGY) A disturbance that propagates outward from any electric charge that oscillates or is accelerated; far from the charge, it consists of vibrating electric and magnetic fields that move at the speed of light and are at right angles to each other and to the direction of motion.

ELECTRON MICROSCOPE Electron microscopes are scientific instruments that use a beam of highly energetic electrons to examine objects on a very fine scale.

EMISSIVITY OR EMITTANCE (E) The emissivity of an object is the ratio of radiant energy emitted by that object divided by the radiant energy that a blackbody would emit at that same temperature. If the emittance is the same at all wavelengths, the object is called a *gray body.* Some industrial materials change their emissivity with temperature and sometimes with other variables. Emissivity always equals absorption, and it also equals 1 minus the sum of reflectance and transmittance (E = A = 1 − T − R).

EQUIVALENT TIME SAMPLING (ETS) A process that captures high-speed electromagnetic events in real time (nanoseconds) and reconstructs them into an equivalent time (milliseconds), which allows easier measurement with present electronic circuitry.

ETHERNET A baseband local area network specification developed by Xerox Corporation, Intel, and Digital Equipment Corp. to interconnect computer equipment using coaxial cable and transceivers.

EXPLOSION-PROOF All equipment is contained within enclosures strong enough to withstand internal explosions without damage, and tight enough to confine the resulting hot gases so that they will not ignite the external atmosphere. This is the traditional method and is applicable to all sizes and types of equipment.

FARAD (F) A unit of capacitance. Because this is a very large unit, a unit equal to one trillionth of a farad (called a *picofarad*, *pF*) is commonly used in RF circuits.

FEP Fluorinated ethylene propylene, a fluorocarbon that is extremely chemically inert, melts at a reasonable temperature, and can be plastic-welded fairly easily. It is difficult to bond with adhesives. The maximum temperature range is limited to the 300°F (150°C) area.

FIELDBUS An all-digital, two-way, multidrop communication system for instruments and other plant automation equipment.

FIREWALL A router or access server designated as a buffer between any public networks and a private network.

FLASH POINT The lowest temperature at which a flammable liquid gives off enough vapors to form a flammable or ignitable mixture with air near the surface of the liquid or within the container used. Many hazardous liquids have flash points at or below room temperatures. They are normally covered by a layer of flammable vapors that will ignite in the presence of a source of ignition.

FLUIDITY Reciprocal of absolute viscosity; unit in the cgs system is the rhe, which equals 1/poise.

FLUTTER Rapid, abnormal reciprocating variations in lift during which the disc does not contact the seat.

© 2003 by Béla Lipták

FUEL CELLS Cells that convert the chemical energy of fuel and oxygen into electrical energy while the electrode and the electrolyte remain unaltered. Fuel is converted at the anode into hydrogen ions, which travel through the electrolyte to the cathode, and electrons, which travel through an external circuit to the cathode. If oxygen is present at the cathode, it is reduced by these electrons, and the hydrogen and oxygen ions eventually react to form water.

GALVANIC PROBE A probe for which no external voltage is applied across electrodes; current flows as the cell is depolarized when diffusion of the analyte occurs. Electrodes are consumed during this operation and require periodic replacement.

GRAY BODY This is an object having an emittance of less than unity, but this emittance is constant at all wavelengths (over that part of the spectrum where the measurement takes place). This means that gray-body radiation curves are identical to the ones shown in Figure 4.11a, except that they are dropped down on the radiated power density scale.

GROSS CALORIFIC VALUE The heat value of energy per unit volume at standard conditions, expressed in terms of British thermal units per standard cubic feet (Btu/SCF) or as kilocalories per cubic Newton meters ($Kcal/N{\cdot}m^3$) or other equivalent units.

GROUND A conducting connection, whether intentional or accidental, between an electrical circuit or equipment and the Earth, or to some conducting body that serves in place of Earth. (See NFPA 70–100.)

GROUND FAULT PROTECTOR A device used to open ungrounded conductors when high currents, especially those resulting from line-to-ground fault currents, are encountered.

GUARD The "electronic guard" (called a *shield* in some RF level literature) consists of a concentric metallic element with an applied voltage that is identical to the voltage on the conductor that it is "guarding." This negates the capacitance between the guarded conductor and the outside world.

GUIDED WAVE RADAR (GWR) A contact radar technology for which time domain reflectometry (TDR) has been developed into an industrial-level measurement system in which a probe immersed in the medium acts as the waveguide.

HAGEN-POISEUILLE LAW Defines the behavior of viscous liquid flow through a capillary.

HOME RUN WIRING Wire between the cabinet where the Fieldbus host or centralized control system resides and the first field junction box or device.

HUB (SHARED) Multiport repeater joining segments into a network.

HYGROMETER An apparatus that measures humidity.

HYGROSCOPIC MATERIAL A material with a great affinity for moisture.

IMPEDANCE Maximum voltage divided by maximum current in an alternating current circuit. Impedance is composed of resistive, inductive, and capacitive components. As in DC circuits, the quantity of voltage divided by current is expressed in ohms (Ω).

INFRARED The portion of the spectrum whose wavelength is longer than that of red light. Only the portion between 0.7 and 20 μm gives usable energy for radiation detectors.

INTERFACE (1) Shared boundary; for example, the physical connection between two systems or two devices. (2) Generally, the point of interconnection of two components, and the means by which they must exchange signals according to some hardware or software protocol.

INTEROPERABILITY A marketing term with a blurred meaning. One possible definition is the ability for like devices from different manufacturers to work together in a system and be substituted one for another without loss of functionality at the host level (HART).

INTRINSIC SAFETY Available energy is limited under all conditions to levels too low to ignite the hazardous atmosphere. This method is useful only for low-power equipment such as instrumentation, communication, and remote control circuits.

KINEMATIC VISCOSITY (υ) Dynamic viscosity/density = $\upsilon = \mu/\rho$.

LAMBDA The desired closed-loop time constant, often set to equal the loop lag time.

LATENCY Latency measures the worst-case maximum time between the start of a transaction and the completion of that transaction.

LIFT The rise of the disc in a pressure-relief valve.

LINE DRIVER Inexpensive amplifier and signal converter that conditions digital signals to ensure reliable transmissions over

© 2003 by Béla Lipták

extended distances without the use of modems.

LOWER EXPLOSIVE LIMIT (LEL) The lowest concentration of gas or vapor in air at which, once ignition occurs, the gas or vapor will continue to burn after the source of ignition has been removed.

LOWPASS FILTERS Filters that are used to remove high-frequency interference or noise from low-frequency signals.

MANCHESTER A digital signaling technique that contains a signal transition at the center of every bit cell.

MANUFACTURING RANGE A range around the specified burst pressure within which the marked or rated burst pressure must fall. Manufacturing range is not used in ISO standards.

MAXIMUM ALLOWABLE OPERATING PRESSURE (MAOP) The maximum pressure expected during normal operation.

MAXIMUM ALLOWABLE WORKING PRESSURE (MAWP) This is the maximum pressure allowed for continuous operation. As defined in the construction codes (ASME B31.3) for unfired pressure vessels, it equals the design pressure for the same design temperature. The maximum allowable working pressure depends on the type of material, its thickness, and the service conditions set as the basis for design. The vessel may not be operated above this pressure or its equivalent at any metal temperature other than that used in its design; consequently, for that metal temperature, it is the highest pressure at which the primary pressure relief valve can be set to open.

MECHANICAL EMISSIVITY ENHANCEMENT Mechanically increasing the emissivity of a surface to near-blackbody conditions (using multiple reflection).

MICRON Equals 001 mm, 10,000 angstroms (Å). A unit used to measure wavelengths of radiant energy.

MODEM Modulator-demodulator; a device that converts digital and analog signals. At the source, a modem converts digital signals to a form suitable for transmission over analog communication facilities. At the destination, the analog signals are returned to their digital form. Modems allow data to be transmitted over voice-grade telephone lines.

MORPHOLOGY The shape and size of the particles making up the object; the direct relationship between these structures and their material properties (ductility, strength, reactivity, etc.).

MULTIPLEXING A scheme that allows multiple logical signals to be transmitted simultaneously across a single physical channel. Compare with *demultiplexing*.

NARROWBAND PYROMETER A radiation pyrometer that is sensitive to only a narrow segment of wavelengths within the total radiation spectrum. Optical pyrometers are among the devices in this category.

NET CALORIFIC VALUE The measurement of the actual available energy per unit volume at standard conditions, which is always less than the gross calorific value by an amount equal to the latent heat of vaporization of the water formed during combustion.

NETWORK All of the media, connectors, and associated communication elements by which a communication system operates.

NEWTON The internationally accepted unit of force, defined as the force required to accelerate 1 kg by 1 m/sec^2. It equals 0.2248 pound-force or about 4 oz.

NONFRAGMENTING DISC A rupture disc design that, when burst, does not eject fragments that could interfere with the operation of downstream equipment (i.e., relief valves).

NONINCENDIARY Equipment that, in normal operation, does not constitute a source of ignition; i.e., surface temperature shall not exceed ignition temperature of the specified gas to which it may be exposed, and there are no sliding or make-and-break contacts operating at energy levels capable of causing ignition. Used for all types of equipment in Division 2 locations. Relies on the improbability of an ignition-capable fault condition occurring simultaneously with an escape of hazardous gas.

OIL IMMERSION Concept in which equipment is submerged in oil to a depth sufficient to quench any sparks that may be produced. This technique is commonly used for switchgears, but it is not utilized in connection with instruments.

OPERATING PRESSURE The operating pressure of a vessel is the pressure, in pounds per square inch gauge (PSIG), to which the vessel is usually subjected in service. A processing vessel is usually designed for a maximum allowable working pressure, in PSIG, that will provide a suitable

© 2003 by Béla Lipták

margin above the operating pressure to prevent any undesirable operation of the relief device. It is suggested that this margin be approximately 10% or 25 PSI (173 kPa), whichever is greater. Such a margin will be adequate to prevent the undesirable opening and operation of the pressure relief valve caused by minor fluctuations in the operating pressure.

OPERATING PRESSURE MARGIN The margin between the maximum operating pressure and the set pressure of the PRV.

OPERATING PRESSURE RATIO The ratio of the maximum operating pressure to the set pressure of the PRV.

OPERATING RATIO OF A RUPTURE DISC (1) The ratio of the maximum operating pressure to the marked burst pressure expressed as a percentage (common U.S. definition). (2) The ratio of the maximum operating pressure to the minimum of the performance tolerance expressed as a percentage (common ISO definition).

OPTICAL PYROMETER Also called *brightness pyrometer*, it uses a narrow band of radiation within the visible range (0.4 to 0.7 μm) to measure temperature by color matching and other techniques.

OVERPRESSURE The pressure increase over the set pressure of the primary relief device. When the set pressure is the same as the maximum allowable operating pressure (MAOP), the accumulation is the same as the overpressure. Pressure increase over the set pressure of the primary relieving device is overpressure. We may observe from this definition that, when the set pressure of the first (primary) safety or relief valve is less than the maximum allowable working pressure of the vessel, the overpressure may be greater than 10% of set pressure.

PARTIAL PRESSURE In a mixture of gases, the partial pressure of one component is the pressure of that component if it alone occupied the entire volume at the temperature of the mixture.

PASCAL-SECOND (PA · S) Internationally accepted unit of absolute (dynamic) viscosity. One Pa·s = 1 Newton-sec/m^2 = 10 poise = 1000 centipoise.

PDVF (POLYVINYLIDENE FLUORIDE) This fluorocarbon has substantially lower temperature limits than the others (250°F or 120°C) and is less inert chemically. It is dissolved by the ketones (acetone, MEK, MIBK) and attacked by benzene and high concentrations of sulfuric acid. The most insidious enemy is caustic, which causes brittleness and cracking. It has much better toughness and abrasion resistance than the other fluorocarbons, as well as unique electrical properties ($K = 8$).

PE (POLYETHYLENE) A low-temperature insulation that is compatible with a wide range of corrosives but is attacked by most petroleum products. Generally limited to situations where fluorocarbons and chlorocarbons are not allowed, such as the tobacco and nuclear power industries. Maximum allowable temperature is in the 180°F (80°C) area.

PEEK (POLYETHER ETHERKETONE) A high-temperature, injection-molded polymer that is chemically quite inert. This material has wide chemical application. Temperature capability is high at 450 to 500°F (225 to 260°C). Avoid any liquids with "phenol" in their names. Adhesive bonding to the molded parts would be difficult.

PFA (PERFLUOROALKOXY) A fluorocarbon that is quite inert chemically, melts at a fairly high temperature, and is easily plastic welded. It can be used up to 550°F (290°C) but, as a probe insulation, it is generally limited to 350°F (175°C) because of bonding limitations with the metal rod.

PHASE DIFFERENCE SENSOR (PDS) A contact radar technology; unlike TDR-based systems, which measure using subnanosecond time intervals, PDS derives level information from the changes in phase angle.

PHOTODETECTOR A device that measures thermal radiation by producing an output through release of electrical changes within its body. They are small flakes of crystalline materials, such as CdS or InSb, that respond to different portions of the spectrum, consequently showing great selectivity in the wavelengths at which they operate.

PIXEL ("PICTURE ELEMENT") A dot that represents the smallest graphic unit of display in a digital image, used in machine vision and camera technology.

PLENUM Air distribution ducting, chamber, or compartment.

POISE (μ) Unit of dynamic or absolute viscosity (dyne-sec/cm^2).

POISEUILLE (PI) Suggested name for the new international standard unit of viscosity, the pascal-second.

POLAROGRAPHY Process for monitoring the diffusion current flow between working and auxiliary

© 2003 by Béla Lipták

electrodes as a function of applied voltage as it is systematically varied. The concentration of analyte allows for the flow of the diffusion current, which is linearly dependent on the analyte concentration. Polarography can be applied using direct current, pulsed direct current, and alternating current voltage excitation waveforms. Dissolved oxygen determination is an example of an application for which polarography is used.

POTENTIOMETRY When no current is passing between electrodes. Examples: ORP, pH, selective-ion electrodes. The electromotive force or potential difference (at zero current) is monitored between the measuring and reference electrodes.

POTTING Refers to the use of a potting compound to completely surround all live parts, thereby excluding the hazardous atmosphere; has been proposed as a method of protection. There is no known usage except in combination with other means.

PP (POLYPROPYLENE) Similar to PE. Used for low cost and where fluorocarbons and chlorocarbons are excluded. Maximum temperature is in the area of 200°F.

PRESSURE-RELIEVING DEVICE The broadest category in the area of pressure-relief devices; includes rupture discs and pressure relief valves of both the simple spring-loaded types and certain pilot-operated types.

PRESSURE RELIEF VALVE (PRV) A generic term that can refer to relief valves, safety valves, and pilot-operated valves. The purpose of a PRV is to automatically open and to relieve the excess system pressure by sending the process gases or fluids to a safe location when its pressure setting is reached.

PRIMARY STANDARD A measuring instrument calibrated at a national standard laboratory such as NIST and used to calibrate other sensors.

PROOF A unit of specific gravity used in the alcohol industry.

PROTOCOL Formal description of a set of rules and conventions that govern how devices on a network exchange information.

(P)TFE (TETRAFLUOROETHYLENE) The oldest, highest-temperature, and most inert fluorocarbon probe insulation. Extremely difficult to adhesive bond, it is usable up to 550°F (290°C) but, on probes, its temperature limit is determined by the type of bonding to the probe rod (300, 450, or 550°F). This is the most common probe insulation in the industry. Because it never melts (it disintegrates, producing HF at >600°F), it is difficult to fabricate, is impossible to plastic weld, and exhibits a high degree of microporosity. Can be destroyed by butadiene and styrene monomer. (The "P" in (P) TFE stands for polymerized.)

PURGING, PRESSURIZATION, VENTILATION This refers to the maintenance of a slight positive pressure of air or inert gas within an enclosure so that the hazardous atmosphere cannot enter. Relatively recent in general application, it is applicable to any size or type of equipment.

QUEVENNE DEGREE A specific gravity unit used in expressing the fat content of milk.

RACEWAY A general term for enclosed channels, conduit, and tubing designed for holding wires and cables.

RADAR (RADIO DETECTION AND RANGING) A system using beamed and reflected radio frequency energy for detecting and locating objects, measuring distance or altitude, navigating, homing, bombing, and other purposes; in detecting and ranging, the time interval between transmission of the energy and reception of the reflected energy establishes the range of an object in the beam's path.

RADIO FREQUENCY (RF) A frequency that is higher than sonic but less than infrared. The low end of the RF range is 20 kHz, and its high end is around 100,000 MHz.

RADIO FREQUENCY INTERFERENCE (RFI) A phenomenon in which electromagnetic waves from a source interfere with the performance of another electrical device.

RATED RELIEVING CAPACITY The maximum relieving capacity of the PRV. This information is normally provided on the nameplate of the PRV. The rated relieving capacity of the PRV exceeds the required relieving capacity and is the basis for sizing the vent header system.

RATIO PYROMETER See two-color pyrometer.

REACTANCE (X) The portion of the impedance of a circuit that is caused by capacitance, inductance, or both. Expressed in ohms.

REAR MOUNT A technique for making long inactive sections by mounting the probe on the end of a pipe, with its coax cable running through the pipe to the top of the tank. The coax must survive the process temperature, so it is often of high-temperature construction.

REFLECTANCE OR REFLECTIVITY (R) The percentage of the total radiation falling on a body that is directly reflected without entry. Reflectance is

© 2003 by Béla Lipták

zero for a blackbody and nearly 100% for a highly polished surface. ($R = 1 - A - T$, where A is the absorbance and T is the transmissivity.)

RELATIVE HUMIDITY The ratio of the mole fraction of moisture in a gas mixture to the mole fraction of moisture in a saturated mixture at the same temperature and pressure. Alternatively, the ratio of the amount of moisture in a gas mixture to the amount of moisture in a saturated mixture at equal volume, temperature, and pressure.

RELATIVE VISCOSITY Ratio of absolute viscosity of a fluid at any temperature to that of water at 20°C (68°F). Because water at this temperature has a μ of 1.002 cP, the relative viscosity of a fluid equals approximately its absolute viscosity in cP. Because the density of water is 1, the kinematic viscosity of water equals 1.002 cSt at 20°C.

RELIEF VALVE An automatic pressure-relieving device actuated by the static pressure upstream of the valve, which opens in proportion to the increase in pressure over the operating pressure. It is used primarily for liquid service.

RELIEVING PRESSURE The sum of opening pressure plus overpressure. It is the pressure, measured at a valve's inlet, at which the relieving capacity is determined.

REOPENING PRESSURE The opening pressure when the pressure is raised as soon as practicable after the valve has reseated or closed from a previous discharge.

RESISTIVE COMPONENT AC current can be separated into two components; the portion that is *in phase* with the excitation voltage is the resistive component.

RESISTIVITY (ρ) The property of a conductive material that determines how much resistance a unit cube will produce. Expressed in units of ohm-centimeters (Ω·cm).

RICHTER DEGREES A unit of specific gravity used in the alcohol industry.

ROENTGEN (R) A unit for expressing the strength of a radiation field. In a 1-R radiation field, 2.08 billion pairs of ions are produced in 1 cm^2 of air.

ROENTGEN EQUIVALENT MAN (REM) A unit of allowable radiation dosage, corresponding to the amount of radiation received when exposed to 1 R over any period of time.

ROOT VALVE The first valve off the process.

RUPTURE TOLERANCE OF A RUPTURE DISC The tolerance range on either side of the marked or rated burst pressure within which the rupture disc is expected to burst. Rupture tolerance may also be represented as a minimum–maximum pressure range. Also referred to as performance tolerance in ISO standards.

SAFETY RELIEF VALVE An automatic pressure-actuated relieving device suitable for use as either a safety or relief valve.

SAFETY VALVE An automatic pressure-relieving device actuated by the static pressure upstream of the valve and characterized by rapid and full opening or pop action. It can be used for steam, gas, or vapor service.

SAND FILLING All potential sources of ignition are buried in a granular solid, such as sand. The sand acts partly to keep the hazardous atmosphere away from the sources of ignition and partly as an arc quencher and flame arrester. It is used in Europe for heavy equipment; it is not used in instruments.

SATURATION A condition in which RF current from a probe to ground is determined solely by the impedance of the probe insulation. Increased conductivity in the saturating medium, even to infinity, will not cause a noticeable change in that current or in the transmitter output.

SATURATION PRESSURE The pressure of a fluid when condensation (or vaporization) takes place at a given temperature. (The temperature is the saturation temperature.)

SATURATED SOLUTION A solution that has reached the limit of solubility.

SAYBOLT FUROL SECOND (SFS) A time unit referring to the Saybolt viscometer with a Furol capillary, which is larger than a universal capillary.

SAYBOLT UNIVERSAL SECOND (SUS) A time unit referring to the Saybolt viscometer.

SAYBOLT VISCOMETER (UNIVERSAL, FUROL) Measures time for given volume of fluid to flow through standard orifice; units are seconds.

SEALING Excluding the atmosphere from potential sources of ignition by sealing such sources in airtight containers. This method is used for components such as relays, not for complete instruments.

SEAL-OFF PRESSURE The pressure, measured at the valve inlet after closing, at which no further liquid, steam, or gas is detected at the downstream side of the seat.

SEGMENT The section of a network that is terminated in its characteristic impedance. Segments are linked by repeaters to form a complete network.

© 2003 by Béla Lipták

SERVICE Term used by NFPA-70 (NEC) to demarcate the point at which utility electrical codes published by IEEE (NESC) take over. Includes conductors and equipment that deliver electricity from utilities.

SET PRESSURE (OPENING PRESSURE) The pressure at which a relief valve is set to open. It is the pressure, measured at the valve inlet of the PRV, at which there is a measurable lift or at which discharge becomes continuous as determined by seeing, feeling, or hearing. In the pop-type safety valve, it is the pressure at which the valve moves more in the opening direction as compared to corresponding movements at higher or lower pressures. A safety valve or a safety relief valve is not considered to be open when it is simmering at a pressure just below the popping point, even though the simmering may be audible.

SHEAR VISCOMETER Viscometer that measures viscosity of a non-Newtonian fluid at several different shear rates. Viscosity is extrapolated to zero shear rate by connecting the measured points and extending the curve to zero shear rate.

SIKES DEGREE A unit of specific gravity used in the alcohol industry.

SIMMER (WARN) The condition just prior to opening at which a spring-loaded relief valve is at the point of having zero or negative forces holding the valve closed. Under these conditions, as soon as the valve disc attempts to rise, the spring constant develops enough force to close the valve again.

SMART FIELD DEVICE A smart field device is a microprocessor-based process transmitter or actuator that supports two-way communications with a host, digitizes the transducer signals, and digitally corrects its process variable values to improve system performance. The value of a smart field device lies in the quality of data it provides.

SPECIFIC HUMIDITY The ratio of the mass of water vapor to the mass of dry gas in a given volume.

SPECIFIC VISCOSITY Ratio of absolute viscosity of a fluid to that of a standard fluid, usually water, both at the same temperature.

SPECTRAL EMISSIVITY The ratio of emittance at a specific wavelength or very narrow band to that of a blackbody at the same temperature.

START-TO-LEAK PRESSURE The pressure at the valve inlet at which the relieved fluid is first detected on the downstream side of the seat before normal relieving action takes place.

STICTION Combination of sticking and slipping when stroking a control valve.

STOKE Unit of kinematic viscosity, υ (cm^2/sec).

STRESS Force/area (F/A).

SUBCHANNEL In broadband terminology, a frequency-based subdivision creating a separate communication channel.

SUPERIMPOSED BACKPRESSURE Variable backpressure that is present in the discharge header before the pressure relief valve starts to open. It can be constant or variable, depending on the status of the other PRVs in the system.

SWITCHED HUB A multiport bridge joining networks into a larger network.

TEFLON®, TFE, FEP, AND PFA Most people interchange the name Teflon with TFE. This is *completely* incorrect but understandable. TFE was the first fluorocarbon polymer to carry the trade name "Teflon" at E.I. DuPont. Dupont chose to use the Teflon trade name for a whole *family* of fluorocarbon resins, so FEP and PFA made by Dupont are also called Teflon. To complicate the matter, other companies now manufacture TFE, FEP, and PFA, which legally cannot be called Teflon, because that name applies only to DuPont-made polymers.

THERMOPILE A device that measures thermal radiation by absorption to become hotter than its surroundings. It is a number of small thermocouples arranged like the spokes of a wheel with the hot junction at the hub. The thermocouples are connected in series, and the output is based on the difference between the hot and cold junctions.

TRALLES DEGREE A unit of specific gravity used in the alcohol industry.

THROUGHPUT The maximum number of transactions per second that can be communicated by the system.

TIME DOMAIN REFLECTOMETER (TDR) An instrument that measures the electrical characteristics of wideband transmission systems, subassemblies, components, and lines by feeding in a voltage step and displaying the superimposed reflected signals on an oscilloscope equipped with a suitable time-base sweep.

TIMEOUT An event that occurs when one network device expects to hear from another network device within a specified period of time but does not. The resulting timeout

© 2003 by Béla Lipták

usually results in a retransmission of information or the dissolving of the session between the two devices.

TOPOLOGY (1) Physical arrangement of network nodes and media within an enterprise networking structure. (2) The surface features of an object—"how it looks" or its texture; a direct relation between these features and the material's properties (hardness, reflectivity, etc.).

TOTAL EMISSIVITY The ratio of the integrated value of all spectral emittance to that of a blackbody.

TRANSISTOR A three-terminal, solid state electronic device made of silicon, gallium arsenide, or germanium and used for amplification and switching in circuits.

TRANSMITTANCE OR TRANSMISSIVITY (T) The percentage of the total radiant energy falling on a body that passes directly through it without being absorbed. Transmittance is zero for a blackbody and nearly 100 percent for a material such as glass in the visible spectrum region. ($T = 1 - A - R$, where A is the absorbance and R is the reflectance.)

TWADDELL DEGREE A unit of specific gravity used in the sugar, tanning, and acid industries.

TWO-COLOR PYROMETER A device that measures temperature as a function of the radiation ratio emitted around two narrow wavelength bands. Also called a *ratio pyrometer.*

UPPER EXPLOSIVE LIMIT (UEL) The highest concentration of gas or vapor in air in which a flame will continue to burn after the source of ignition has been removed.

VARACTOR A voltage-sensitive capacitor.

VARIABLE BACKPRESSURE Backpressure that varies as a result of changes in operation of one or more pressure-relief valves connected into a common discharge header.

VELOCITY GRADIENT (SHEAR) Rate for change of liquid velocity across the stream—V/L for linear velocity profile, dV/dL for nonlinear velocity profile. Units are V–L = ft/sec/ft = sec^{-1}.

VELOCITY HEAD The velocity head is calculated as $v^2/2\,g$, where v is the flowing velocity, and g is the gravitational acceleration (9.819 m/s^2 or 32.215 ft/s^2 at 60° latitude).

WAVEGUIDE A device that constrains or guides the propagation of electromagnetic waves along a path defined by the physical construction of the waveguide; includes ducts, a pair of parallel wires, and coaxial cable.

WIDEBAND (TOTAL) PYROMETER A radiation thermometer that measures the total power density emitted by the material of interest over a wide range of wavelengths.

WOBBE INDEX AGA 4A defines the Wobbe index as a numerical value that is calculated by dividing the square root of the relative density (a key flow orifice parameter) into the heat content (or BTU per standard cubic foot) of the gas. Mathematically, the Wobbe index is defined by the equation below:

$$WI = CV/\sqrt{SQ}$$

where:

WI = the Wobbe index
CV = the calorific value
SG = the specific gravity

© 2003 by Béla Lipták

ABBREVIATIONS, NOMENCLATURE, ACRONYMS, AND SYMBOLS

2D	two-dimensional
3D	three-dimensional

A

a	acceleration
A	(1) area; (2) ampere, symbol for basic SI unit of electric current; (3) admittance
Å	angstrom (= 10^{-10} m)
AA	atomic absorption
AAS	atomic absorption spectrometer
abs	absolute (e.g., value)
AC	alternating current
ACFM	actual cubic feet per minute; volumetric flow at actual conditions in cubic feet per minute (= 28.32 alpm)
ACL	asynchronous connectionless
ACMH	actual cubic meters per hour
ACMM	actual cubic meters per minute
ACS	analyzer control system
ACSL	advanced continuous simulation language
A/D	analog to digital, also analog-to-digital converter
AD	actuation depth
ADC	analog-to-digital converter
ADIS	approved for draft international standard circulation
A&E	alarm and event
AES	atomic emission spectrometer
AF, a-f	audio frequency
AFD	adjustable frequency drive
AGA3	American Gas Association Report No. 3
ai	Adobe Illustrator®
AI	analog input
a(k)	white noise
ALARA	as low as reasonably achievable
ALARP	as low as reasonably practicable
alpm	actual liters per minute
alt	altitude
AM	amplitude modulated or actual measurement
amp	ampere; also A
AMPS	advanced mobile phone system
AMS	asset management solutions or analyzer maintenance solutions
AO	analog output
AOTF	acousto-optical tunable filters
AP	access point
APC	automatic process control
APDU	application (layer) protocol data unit
API	application programming interface or absolute performance index
°API	API degrees of liquid density
APM	application pulse modulation
AR	autoregressive
ARA	alarm response analysis
ARIMA	autoregressive integrated moving average
ARP	address resolution protocol
ASCII	American Standard Code for Information Interchange
AS-i	actuator sensor interface
ASIC	application-specific integrated circuit
ASK	amplitude shift keying
asym	asymmetrical; not symmetrical
ATG	automatic tank gauging
atm	atmosphere (= 14.7 psi)
ATP	adenosine triphosphate
ATR	attenuated total reflectance
AUI	attachment unit interface
aux	auxiliary
AWG	American wire gauge

B

b	dead time
°Ba	balling degrees of liquid density
bar	(1) barometer; (2) unit of atmospheric pressure measurement (= 100 kPa)
barg	bar gauge
bbl	barrels (= 0.1589 m^3)
BCD	binary coded decimal
BCS	batch control system

© 2003 by Béla Lipták

°Bé	Baumé degrees of liquid density
BFO	beat frequency oscillator
BFW	boiler feedwater
bhp	brake horsepower (= 746 W)
°Bk	Barkometer degrees of liquid density
blk	black (wiring code color for AC "hot" conductor)
BMS	burner management system
BOD	biochemical oxygen demand
bp, b.p.	boiling point
BPCS	basic process control system
BPS, b/sec	bits per second
BPSK	binary phase shift keying
Bq	becquerel, symbol for derived SI unit of radioactivity, joules per kilogram, J/kg
°Br	Brix degrees of liquid density
Btu	British thermal unit (= 1054 J)
BWG	Birmingham wire gauge
B2B	business to business

C

c	(1) velocity of light in vacuum (3×10^8 m/s); (2) centi, prefix meaning 0.01
C	coulombs, symbol for discharge coefficient, capacitance
°C	Celsius degrees of temperature
ca.	*circa* (about, approximately)
CAC	channel access code
CAD	computer aided design
Cal	calorie (gram = 4.184 J); also g-cal
CAN	control area network or control and automation network
CARI	combustion air requirement index
CATV	community antenna television (cable)
cc	cubic centimeter (= 10^{-6} m^3)
CCD	charge-coupled device
CCF	common cause failure or combination capacity factor
Ccm	cubic centimeter per minute
CCR	central control room
Ccs	constant current source
CCS	computer control system or constant current source
CCTV	closed circuit television
CCW	counterclockwise
CD	dangerous coverage factor
cd	candela, symbol for basic SI unit of luminous intensity
CD	compact disk or collision detector
CDDP	cellular digital data packet
CDF	cumulative distribution function
CDMA	code division multiple access
CDPD	cellular digital packet data
CDT	color detection tube
CDTP	cold differential test pressure
CEMS	continuous emissions monitoring system
CENP	combustion engineering nuclear power
CE	Conformité Européne (European Conformity), applicable to electrical safety
CFA	Continuous flow analyzer
CFM, cfm, ft^3/min	cubic feet per minute (28.32 lpm)
CFR	Code of Federal Regulations
CF/yr	cubic foot per year
Ci	curie (= 3.7×1010 Bq)
CI	cast iron
CIM	computer integrated manufacturing
CIP	computer aided production or control and information protocol (an application layer protocol supported by DeviceNet, ControlNet, and Ethernet/IP)
CJ	cold junction
CIP	clean in place
CL1	electrically hazardous, Class 1, Division 1, Groups C or D
CLD	chemiluminescence detector
CLP	closed-loop potential factor
cm	centimeter (= 0.01 m)
CM	condition monitoring or communication (interface) module
CMF	Coriolis mass flowmeter
CMMS	computerized maintenance management system
CMPC	constrained multivariable predictive control
cmph, m^3/h	cubic meter per hour
CNI	ControlNet International
CO	controller output or carbon monoxide
CO_2	carbon dioxide
CO_2D	carbon dioxide demand
COD	chemical oxygen demand
COF	coefficient of haze
COM	component object model
COTS	commercial off-the-shelf
cpm	cycles per minute; counts per minute
Co	cobalt
cos	cosine (trigonometric function)
cp, c.p.	(1) candle power, (2) circular pitch, (3) center of pressure (cp and ctp sometimes are used for centipoise)
cps	(1) cycles per second (hertz, Hz); (2) counts per second; (3) centipoise (= 0.001 Pa·S)
CPS	computerized procedure system
CPU	central processing unit
CPVC	chlorinated polyvinyl chloride
CR	corrosion rate
CRC	cyclical redundancy check or cyclic redundancy code. (An error detection coding technique based on modulo-2 division. Sometimes misused to refer to a block check sequence type of error detection coding.)
CRDS	cavity ring-down spectroscopy

© 2003 by Béla Lipták

CRLF	carriage return-line feed
CRT	cathode ray tube
Cs	cesium
CS	carbon steel
CSL	car seal lock
CSMA/CD	carrier sense, multiple access with collision detection
CSO	car seal open
CSS	central supervisory station
cSt	centistoke
CSTR	continuous-stirred tank reactor
CT	cooling tower or the product of C for disinfectant concentration and T for time of contact in minutes
CTDMA	concurrent time domain multiple access
CTMP	chemi-thermo-mechanical pulp
CVAAS	cold vapor atomic absorption spectroscopy
CVF	circular variable filters
cvs	comma-separated variables
CW	clockwise

D

d	(1) derivative, (2) differential as in dx/dt, (3) deci, prefix meaning 0.1, (4) depth, (5) day
D	diameter; also dia and ϕ or derivative time of a controller
DA	data access
D/A	digital-to-analog
DAC	device access code
DACU	data acquisition and control unit
DAE	differential algebraic equation
DAMPS	digital advanced mobile phone system
dB	decibels
DBB	double-block and bleed
DBPSK	differential binary phase shift keying
DC	diagnostic coverage
DC, dc	direct current
DCE	data communications equipment
DCOM	distributed COM
DCS	distributed control system
DD	data definition or dangerous component failure is detected in leg or a device description written using DDL
D/DBP	disinfectants/disinfection byproducts
DDC	direct digital control
DDE	dynamic data exchange
DDL	device description language (an object-oriented data-modeling language currently supported by PROFIBUS, FF, and HART)
deg	degree; also ° (π/180 rad)
DES	data encryption standard
DFIR	diffused infrared
DFR	digital fiber-optic refractometer
DFT	digital Fourier transform
DH	data highway
DI	discrete (digital) input
dia	diameter; also D and ϕ
DIAC	dedicated inquiry access code
DIR	diffused infrared
DIS	draft international standard
DIX	Digital-Intel-Xerox (DIX is the original specification that created the *de facto* Ethernet standard. IEEE 802.3 came later, after Ethernet was established.)
d(k)	unmeasured disturbance
D(k)	measured disturbance
DLE	data link escape
DLL	dynamic link library
DMA	dynamic mechanical analyzer
DMM	digital multimeter
DN	diameter normal, the internal diameter of a pipe in rounded millimeters
DO	dissolved oxygen or discrete (digital) output
DOAS	differential optical absorption spectroscopy
d/p cell	differential pressure transmitter (a Foxboro trademark)
DPD	*N*,*N*-diethyl-*p*-phenylenediamine
DPDT	double-pole double-throw (switch)
dpi	dots per inch
DQPSK	differential quadrature phase shift keying
DSL	digital subscriber line
DSP	digital signal processing
DSR	direct screen reference
DSSS	direct sequence spread spectrum
DT	dead time (second or minutes)
DTC	digital temperature compensation
DTE	data terminal equipment
DTGS	deuterated tryglycine sulfate
DTM	device type manager (An active-X component for configuring an industrial network component. A DTM "plugs into" an FDT.)
DU	dangerous component failure occurred in leg, but undetected
DVM	digital voltmeter

E

e	(1) error, (2) base of natural (Naperian) logarithm, (3) exponential function; also exp $(-x)$ as in e^{-x}
E	(1) electric potential in volts, (2) scientific notation as in 1.5E − 03 = 1.5×10^{-3}
E{.}	expected value operator
EAI	enterprise application integration
EAM	enterprise asset management
EBCDIC	extended binary code for information interchange
EBR	electronic batch records
ECD	electron capture detector
ECKO	eddy-current killed oscillator
ECN	effective carbon number

© 2003 by Béla Lipták

ECTFE	ethylene chloro-tetra-fluoro-ethylene (Halar)
EDS	electronic data sheet (DeviceNet)
EDTA	ethylenediaminetetraacetic acid
EDXRF	energy dispersive x-ray fluorescence
E/E/PE	electrical/electronic/programmable electronic
E/E/PES	electrical/electronic/programmable electronic system
EFD	engineering flow diagram
e.g.	*exempli gratia* (for example)
EHC	electrohydraulic control
EHM	equipment health management
e(k)	feedback error
E.L.	elastic limit
Emf, EMF	(1) electromotive force (volts), (2) electromotive potential (volts)
EMI	electromagnetic interference
EMI/RFI	electromagnetic interference/radio frequency interference
em(k)	process/model error
EN	European standard
EPA	enhanced performance architecture, Environmental Protection Agency
EPC	engineering-procurement-construction (firm or industry)
EPCM	engineering, procurement, and construction management (companies)
EPDM	ethylene propylene diene terpolymer
EPS	electronic pressure scanner, Encapsulated PostScript file or emergency power supply
EQ, eq	equation
ERM	enterprise resource manufacturing
ERP	enterprise resource planning, effective radiated power
ERW	electric-resistance welded
ESD	emergency shutdown (system), electrostatic discharge
ESN	electronic serial number
ETFE	ethylene-tetrafluoroethylene copolymer (Tefzel®)
ETS	equivalent time sampling
Exp	exponential function as in exp (– at) = e^{-at}; also e

F

F	frequency (also freq.)
F	farad, symbol for derived SI unit of capacitance, ampere-second per volt, A·s/V
°F	degrees Fahrenheit [t°C = (t°F – 32)/1.8]
FAT	factory acceptance testing
FBAP	function block application process (FF)
FBD	function block diagram
FBG	fiber bragg grating
FC	flow controllers
FCC	fluid catalytic cracking unit
FCOR	filtering and correlation (method)
FCS	frame check sequence
FDE	fault disconnection electronics
FDL	fieldbus data link
FDMA	frequency division multiple access
FDS	flame-detection system
FDT	field device tool (a Windows®-based Microsoft framework for engineering and configuration tools)
FE	final elements
FEED	front end engineering and design
FEGT	furnace exit gas temperature
FEP	fluorinated ethylene propylene
FES	fixed end system
FF-HSE	Foundation Fieldbus, high-speed Ethernet
FFT	fast Fourier transform
FH	frequency hopping
Fhp	fractional horsepower (e.g., 1/4-hp motor)
FHSS	frequency hopped spread spectrum
FI	flow indicator
FIA	flow injection analyzer
FIC	flow indicator controller
FID	flame ionization detector
FIE	flame ionization element
FIFO	first-in, first-out
Fig.	figure
FISCO	fieldbus Intrinsic Safety COncept
fl.	fluid
fl. oz.	fluid ounce (= 29.57 cc)
FM	frequency modulated
FMCW	frequency modulated carrier wave
FMEA	failure mode and effects analysis
FMEDA	failure modes, effects and diagnostic analysis
FMS	fieldbus message specification or fieldbus messaging services/system
FO	fiber optic or fail open
FOP	fiber-optic probe
FOV	field of view
fp, f.p.	freezing point
FPC	fine particle content
FPD	flame photometric detector
FPM, fpm, ft/min	feet per minute (= 0.3048 m/m)
fps, ft/s	feet per second (= 0.3048 m/s)
FRC	flow recording controller
FRM	frequency response method
FS, fs	full scale
FSC	fail safe controller
FSD	full scale deflection
FSK	frequency shift keying
FT	Fourier transform
FTA	fault tree analysis
FTIR	Fourier transform infrared
FTNIR	Fourier near infrared
FTP	file transfer protocol
FTS	fault-tolerant system
FTU	formazin turbidity unit

© 2003 by Béla Lipták

G

g	acceleration resulting from gravity (= 9.806 m/s^2) or conductivity
G	giga, prefix meaning 10^9, or process gain or conductance
gal	gallon (= 3.785 liters)
GB	gigabyte, 1,000,000,000 bytes
GbE	gigabit Ethernet
gbps, GBPS	gigabits per second
G_c	feedback controller transfer function
GC	gas chromatograph
g-cal	gramcalorie, see also cal
G_d	unmeasured disturbance transfer function
GD	measured disturbance transfer function
GD	approximate feedforward transfer function model
GEOS	geosynchronous Earth orbit satellite
G_{ff}	feedforward controller transfer function
GFC	gas filter correlation
GHz	gigahertz
GIAC	general inquiry access code
GLR	gas-to-liquid ratio
G-M	Geiger-Mueller tube, for radiation monitoring
G_m	model transfer function
GMR	giant magneto resistive
GPH, gph, gal/h	gallons per hour (= 3.785 lph)
G_p	process transfer function
GPM, gpm, gal/min	gallons per minute (= 3.785 lpm)
GPS	global positioning satellite, global positioning system
g	gram
grn	green (wiring code color for grounded conductor)
GSC	gas-solid chromatography
GSD	Profibus version of an electronic data sheet
GUI	graphical user interface
GWR	guided wave radar
Gy	gray, symbol for derived SI unit of absorbed dose, joules per kilogram, J/kg

H

h	(1) height, (2) hour
H	(1) humidity expressed as pounds of moisture per pound of dry air; (2) henry, symbol of derived SI unit of inductance, volt-second per ampere, V·s/A
H1	field-level fieldbus; also refers to the 31.25 kbps intrinsically safe SP-50, IEC61158–2 physical layer
HAD	historical data access
H&RA	hazard and risk analysis
HART	highway addressable remote transducer
HAZOP	HAZard and OPerability studies
HC	horizontal cross-connect
HCN	hydrogen cyanide
HEC	header error check
HF	hydrogen fluoride or hydrofluoric acid
HFE	human factors engineering
HFT	hardware fault tolerance
hhv	higher heating value
HIPS	high-integrity protection systems
HIPPS	high-integrity pressure protection system
HIST	host interface system test
HMI	human-machine interface
HMSD	hexamethyldisiloxane
hor.	horizontal
HP, hp	horsepower (U.S. equivalent is 746 W)
HPLC	high-pressure (or high-precision) liquid chromatography
HSE	high-speed Ethernet (host-level fieldbus)
HSI	human system interface
HTG	hydrostatic tank gauging
HTML	hypertext markup language
HTTP	hypertext transfer protocol
HVAC	heating, ventilation, and air conditioning
H/W	hardware
HWD	height, width, depth
Hz	hertz, symbol for derived SI unit of frequency, one cycle per second (l/s)

I

I	integral time of a controller in units of time/repeat
IA	instrument air
IAC	inquiry access code
IAE	integral of absolute error
I&C	instrumentation and control or information and control
I&E	instrument and electrical
IAQ	indoor air quality
ibidem	in the same place
IC	integrated circuit, intermediate cross-connect, or inorganic carbon
ICA	independent computing architecture
ICCMS	inadequate core cooling monitoring system
ICMP	internet control message protocol
ICP	inductively coupled plasma
ID	inside diameter
i.e.	*id est* (that is)
IEH	*Instrument Engineers' Handbook*
IETF	Internet engineering task force
IIS	Internet information server
IL	instruction list
ILD	instrument loop diagrams
IMC	internal model control
iMEMS	integrated microelectromechanical system
in.	inch (= 25.4 mm)

© 2003 by Béla Lipták

InGaAs	iridium gallium arsenide
in-lb	inch-pound (= 0.113 N × m)
I/O	input/output
I-P	current-to-pressure conversion
IP	Internet protocol or ionization potential
IPA	isopropyl alcohol
IPL	independent protection layer
IPTS	international practical temperature scale
IR	infrared
IS	intermediate system
ISAB	ionic strength adjustment buffer
ISE	integral of squared error or ion selective electrode
ISFET	ion-selective field-effect transistor
ISM	industrial, scientific, medical
ISP	Internet service provider or interoperable system provider
IT	information technology (as in IT manager or IT department)
ITAE	integral of absolute error multiplied by time
ITSE	integral of squared error multiplied by time
ITT	intelligent temperature transmitters
JTU	Jackson turbidity unit
IXC	interexchange carrier

J

J	joule, symbol for derived SI unit of energy, heat or work, Newton-meter, N·m
JIT	just-in-time (manufacturing)

K

k	kilo, prefix meaning 1000
K	coefficient, also dielectric constant
K	Kelvin, symbol for SI unit of temperature or process gain (dimensionless), not used with degree symbol
kbs, kbps, kb/sec	kilobits per second
kBps, kB/sec	kilobytes per second
k-cal	kilogram-calories (= 4184 J)
kg	kilogram symbol for basic SI unit of mass
kg-m	kilogram-meter (torque, = 7.233 foot-pounds)
KHP	potassium acid phthalate
kip	1000 pounds (= 453.6 kg)
km	kilometers
KOH	potassium hydroxide
K_p	proportional gain of a PID controller
kPa	kilopascal
kVA	kilovolt-amperes
kW	kilowatts
KWD	kilowatt demand
kWh	kilowatt-hours (= 3.6×10^6J)

L

l	liter (= 0.001 m^3 = 0.2642 gal), also L
L	(1) length, (2) inductance, expressed in henrys
L2F	laser two-focus anemometer
Lab	CIE functions for lightness, red/green, blue/yellow
LAN	local area network
LAS	link active scheduler (FF)
lat	latitude
lb	pound (= 0.4535 kg)
LC	level controller or liquid chromatography
LCD	liquid crystal display
Lch	CIE functions for lightness, chroma, hue
LCM	life cycle management
LCSR	loop current step response
LD	ladder diaphragm
LDA	laser Doppler anemometer
LDP	large display panel
LEC	local exchange carrier or lower explosive limit
LED	light-emitting diode
LEL	lower explosive limit
LEOS	low Earth orbit satellites
LF	linear feet
LGR	liquid-to-gas ratio
LI	level indicator
LIC	level indicator controller
LIDAR	laser induced doppler absorption radar or light detection and ranging
lim	limit
lin	linear
liq	liquid
LLC	logical link control
lm	lumen, symbol for derived SI unit of luminous flux, candela-steradian, cd·sr
ln	Naperian (natural) logarithm to base e
LNG	liquefied natural gas
LO	lock open
LOC	limiting oxygen concentration
log, $\log_{10}$	logarithm to base 10; common logarithm
LOI	local operation interface
long.	longitude
LOPA	layers of protection analysis
LOS	line of sight
LP or LPG	liquefied petroleum or propane gas
LPC	large particle content
LPG	liquefied petroleum gas
lph	liters per hour (0.2642 gph)
lpm	liters per minute (0.2642 gpm)
LPR	linear polarization resistance
LQG	linear quadratic Gaussian
LRC	longitudinal redundancy check or level recording controller
LRL	lower range limit
LRV	lower range value

© 2003 by Béla Lipták

LTI	linear time-invariant
LVDT	linear variable differential transformer
LVN	limiting viscosity number
lx	lux, symbol for derived SI unit of illuminance, lumen per square meter, lm/m^2

M

m	(1) meter, symbol for basic SI unit of length, (2) milli, prefix meaning 10^{-3}, (3) minute (temporal) (also min)
M	(1) 1000 (in commerce only), (2) mach number, (3) molecular weight; mole; (4) mega, prefix meaning 10^6
mA	milliampere (= 0.001 A)
MAC	medium access control
MACID	medium access control identifier
MAE	minimum absolute error
MAOP	maximum allowable operating pressure
MAP	manufacturing automation (access) protocol
MAU	media access unit
MAWP	maximum allowable working pressure
max.	maximum
Mb	megabit, 1,000,000 bits
MB	megabyte, 1,000,000 bytes
Mbps, Mb/sec	megabits per second
MBps, MB/sec	megabytes per second
MC	main cross-connect
mCi, mC	millicuries (= 0.001 Ci)
m.c.p.	mean candle power
MCR	main control panel
MCT	mercury cadmium telluride
MDBS	mobile data base station
MDIS	mobile data intermediate system
m/e	mass-to-energy ratio
med.	medium or median
MEDS	medium Earth orbit satellite
MEMS	microelectromechanical system
m.e.p.	mean effective pressure
MES	manufacturing execution system or mobile end station
MeV	mega-electron volt
MFD	mechanical flow diagram
MFE	magnetic flux exclusion
mfg	manufacturer or manufacturing
mg	milligrams (= 0.001 g)
mho	outdated unit of conductance, replaced by siemens (S)
mi	mile (= 1.609 km)
MI	melt index
MIB	management information base
micro	prefix meaning 10^{-9}; also μ (mu); sometimes (incorrectly) u, as in ug to mean μg [both meaning microgram (= 10^{-9} kg)]
micron	micrometer (= 10^{-6} m) (term now considered obsolete)
MIE	minimum ignition energy
MIMO	multiple-input, multiple-output
MIMOSA	machinery information management open system alliance
min.	(1) minute (temporal), also m, (2) minimum, (3) mobile identification number
MIR	multiple internal reflection
MIS	management information system
ml	milliliter (= 0.001 l = 1 cc)
MLR	multiple linear regression
mm	millimeter (= 0.001 m) or millimicron (= 10^{-9} m)
mmf	magnetomotive force in amperes
MMI	man-machine interface
mmpy	millimeters per year
MMS	machine monitoring system or manufacturing message specification
MOC	management of change
MODEM	modulator/demodulator
MON	motor octane number
MOS	metal oxide semiconductor
MOSFET	metallic oxide semiconductor field-effect transistor
mol	mole, symbol for basic SI unit for amount of substance
mol.	molecule
MOON	M out of N voting system
mp, m.p.	melting point
MPa	megapascal (10^6 Pa)
MPC	model predictive control
MPFM	multiphase flowmeter
mph, MPH, mi/h	mile per hour (1.609 km/h)
mps, m/s	meters per second
MPS	manufacturing periodic/aperiodic services
mpy	mills per year
mR	milliroentgen (= 0.001 R)
mrd	millirad (= 0.001 rd)
mrem	milliroentgen-equivalent-man
MRP	material requirement planning or manufacturing resource planning
ms, msec	millisecond (= 0.001 s)
MS	mass spectrometer, Microsoft®
MSA	metropolitan statistical areas
MSB	most significant bit
MSD	most significant digit
MSDS	material safety data sheet
MT	measurement test
MTBE	methyl tertiary butyl ether
MTBF	mean time between failures
MTSO	mobile telephone switching office
MTTF	mean time to failure
MTTFD	mean time to fail dangerously
MTTFS	mean time to spurious failure
MTTR	mean time to repair
MTU	master terminal unit

© 2003 by Béla Lipták

MVC	minimum variance controller
MW	megawatt (= 10^6 W)
MWC	municipal waste combustors
MWD	molecular weight distribution

N

N	Newton, symbol for derived SI unit of force, kilogram-meter per second squared, kg·m/s^2
n	(1) nano, prefix meaning 10^{-6}, (2) refractive index
N_0	Avogadro's number (= 6.023×10^{23} mol^{-1})
N-16	nitrogen-16
NAAQS	national ambient air quality standards
NAP	network access port/point
NAT	network address translation
NB	nominal bore, internal diameter of a pipe in inches
NC, N/C	normally closed (switch contact)
NC	numeric controller
NDIR	nondispersive infrared
NDM	normal disconnect mode
NDT	nondestructive testing
NEC	National Electrical Code
NESC	National Electrical Safety Code
NEXT	near-end crosstalk
NIC	network interface card
NIP	normal incident pyrheliometer
NIR	near infrared
nm	nanometer (10^{-9} m)
NMR	nuclear magnetic resonance
NO, N/O	normally open (switch contact)
NPS	nominal pipe size, the internal diameter of a pipe in inches
NRM	normal response mode
NRZ	non-return to zero (refers to a digital signaling technique)
NS	nominal pipe size, the internal diameter of a pipe in inches
NTC	negative temperature coefficient
NTP	network time protocol or normal temperature and pressure corresponding to 1 atm absolute (14.7 psia) and 0°C (32°F)
NTSC	National Television Standards Code
NTU	nephalometric turbidity unit
NUT	network update time

O

OCD	orifice-capillary detector
OD	outside diameter or oxygen demand
ODBC	open database connectivity or communication
OES	optical emission spectrometer
oft, OFT	optical fiber thermometry
ohm	unit of electrical resistance; also Ω (omega)
OJT	on-the-job training
OLE	object linking and embedding
OLE_DB	object linking and embedding data base
OMMS	optical micrometer for micromachine
ON	octane number
OPC	object link embedding (OLE) for process control
OP-FRIR	open path Fourier-transform infrared
OP-HC	open-path hydrocarbon
OP-TDLAS	open-path tunable diode-laser absorption spectroscopy
OP-UV	open-path ultraviolet
or	orange (typical wiring code color)
ORP	oxidation-reduction potential
OS	operator station or operating system
OSFP	open shortest path first
OSI	open system interconnect (model)
OSI/RM	open system interconnect/reference model
OT	operator terminal or open tubular
OTDR	optical time domain
oz	ounce (= 0.0283 kg)

P

P&ID	piping and instrumentation diagram
p	(1) pressure; (2) pico, prefix meaning 10^{-12} (3) variable for resistivity
Pa	pascal, symbol for derived SI unit of stress and pressure, Newtons per square meter, N/m^2
PA	plant air
PAC	path average concentration
PAL	phase alternating line
PAN	personal area network
P&ID	piping (process) and instrumentation diagram (drawing)
Pas, Pa·s	pascal-second, a viscosity unit
PAS	process automation system (successor to DCS)
PB	proportional band of a controller in percent (100%/controller gain)
PC	personal computer (usually Microsoft Windows®-based) or pressure controller
PCA	principal component analysis
PCCS	personal computer control system
PCDD	polychlorinated dibenzo-*p*-dioxine
PCDF	polychlorinated dibenzo furans
PCR	principal component regression
PCS	process control system or personal communication services
pct	percent; also%
PCTFE	polychlorotrifluoroethylene
PCV	pressure control valve
PD	positive displacement or proportional and derivative
PDA	personal digital assistant or photodiode array
PDD	pulsed discharge detector

© 2003 by Béla Lipták

PDF	probability density function, probability of failure or portable document file
PDS	phase difference sensor
PDU	protocol data unit
PDVF	polyvinylidene fluoride
PE	polyethylene
PED	pressure equipment directive
PEEK	poly ether ether ketone
PEL	permissible exposure level
PES	programmable electronic system
PFA	per-fluoro-alkoxy copolymer
PFC	procedure functional chart
PFD	process flow diagram
PdM	predictive maintenance
pF	picofarad (= 10^{-12} F)
PF, p.f.	power factor
PFA	perfluoralkoxy (a form of Teflon)
PFD	process flow diagram
PFD	probability of failure on demand
PFDavg	average probability of failure on demand
PFPD	pulsed flame photometric detector
PGNAA	prompt gamma neutron activation analysis
PGC	process gas chromatograph
pH	acidity or alkalinity index (logarithm of hydrogen ion concentration)
PHA	process hazard analysis
pi, pl	Poiseuille, a viscosity unit
PI	proportional and integral, or pressure indicator
P/I	pneumatic to current (conversion)
PIC	pressure indicating controller or path integrated concentration
PID	proportional, integral, and derivative (control modes in a classic controller), or photoionization detector
PI-MDC	path integrated minimum detectable concentration
PIMS	process information management system
PIP	process industry practices
PIR	precision infrared radiometer
PLC	programmable logic controller
PLS	physical layer signaling or partial least squares
PM	photomultiplier
PMA	physical medium attachment
PMBC	process model based control
PMD	photomultiplier detector
PMF	probability mass function
PMMC	permanent magnet moving coil
PMT	photomultiplier tube or photometer tube
POPRV	pilot-operated pressure relief valve
PP	polypropylene
ppb, PPB	parts per billion
ppm, PPM	parts per million
PPP	point-to-point protocol
ppt	parts per trillion
PRC	pressure recording controller
PRD	pressure relief device
precip	precipitate or precipitated
PRV	pressure relief valve
PS	power supply (module)
PSAT	pre-startup acceptance test
PSD	power spectral density or photosensitive device
PSG	phosphosilicate glass
PSI	pre-startup inspection
psi, PSI, lb/in^2	pounds per square inch (= 6.894 kPa)
PSIA, psia	absolute pressure in pounds per square inch
PSID, psid	differential pressure in pounds per square inch
PSIG, psig	above atmospheric (gauge) pressure in pounds per square inch
PSK	phase shift keying
PSM	process safety management
PSSR	re-startup safety review
PSTN	public switched telephone network
PSU	post-startup
PSV	pressure safety valve
pt	point, part, or pint (= 0.4732 liter)
PTB	Physikalisch-Technische Bundesanstalt
PTC	positive temperature coefficient
PTFE	polytetrafluoroethylene (conventional Teflon)
PUVF	pulsed ultraviolet fluorescence
PV	process variable (measurement) or the HART primary variable
PVC	polyvinyl chloride
PVDF	polyvinylidene fluoride
PVLO	process variable low (reading or measurement)
PVHI	process variable high (reading or measurement)
PWM	pulse width modulation
PWR	pressurized water reactor
PZT	lead-zirconate-titanate ceramic

Q

q	(1) rate of flow, (2) electric charge in coulombs, C
q^{-1}	backward shift operator
Q	quantity of heat in joules, J, or electric charge
°Q	Quevenne degrees of liquid density
QA	quality assurance
QAM	quadrature amplitude modulation
QCM	quartz crystal microbalance
QPSK	quadrature phase shift keying
qt	quart (0.9463 l)
QV	quaternary variable

R

r	radius; also rad
r^2	multiple regression coefficient

© 2003 by Béla Lipták

R	(1) resistance, electrical, in ohms, (2) resistance, thermal, meter-Kelvin per watt, m·K/W, (3) gas constant (= 8.317 × 107 erg·mol^{-1},°C^{-1}), (4) roentgen, symbol for accepted unit of exposure to X and gamma radiation (= 2.58 × 10^{-4} C/kg)
Ra	radium
rad	(1) radius, also r, (2) radian, symbol for SI unit of plane angle measurement or symbol for accepted SI unit of absorbed radiation dose (= 0.01 Gy)
RADAR	radio detection and ranging
RAID	redundant array of inexpensive disks
RAM	random access memory
R&D	research and development
RASCI	responsible for, approves, supports, consults, informed
RCU	remote control unit
RDP	remote desktop protocol
rem	roentgen equivalent man (measure of absorbed radiation dose by living tissue)
rev	revolution, cycle
Re	Reynolds number
Re_D	Reynolds number corresponding to a particular pipe diameter
RF, rf	radio frequency
RFC	request for comment (an Internet protocol specification)
RFF	remote fiber fluorimetry
RFI	radio frequency interference
RFQ	request for quote
RGA	residual gas analyzer
RGB	red, green, blue
RGM	reactive gaseous mercury
RH	relative humidity
RI	refractive index
RIP	routing information protocol
r(k)	set point
RMS, rms	root mean square (square root of the mean of the square) or rotary mirror sleeves
ROI	return on investment
ROM	read-only memory
RON	research octane number
RPC	remote procedure call (RFC1831)
RPM, rpm, r/min	revolutions per minute
RVP	Reid vapor pressure
rps, r/sec	revolutions per second
RRF	risk reduction factor
RRT	relative response time (the time required to remove most of the disturbance)
RS	recommended standard
RSA	rural service areas
RSS	root sum squared
RTD	resistance temperature detector
RTO	real-time optimization or operation
RTOS	real-time operating system
RTR	remote transmission request
RTS	ready (or request) to send
RTS/CTS	request to send/clear to send
RTU	remote terminal unit
RUDS	reflectance units of dirt shade
RV	relief valve
RWS	remote workstation

S

s	second (also sec), symbol for basic SI unit of time; also Laplace variable
S	siemens (siemens/cm), symbol for unit of conductance, amperes per volt, A/V
s^2y	sample variance of output y
SAP	service access point
sat.	saturated
SAT	site acceptance test or supervisory audio tone
SAW	surface acoustic wave
SC	system codes
SCADA	supervisory control and data acquisition
SCCM	standard cubic centimeter per minute
SCD	streaming current detector
SCFH	standard cubic feet per hour
SCCM	standard cubic centimeter per minute
SCD	sulfur chemilumenesce detector
SCE	saturated calomel electrode
SCFH	standard cubic feet per hour
SCFM	standard cubic feet per minute (air flow at 1.0 atm and 70°F)
SCM	station class mark
SCMM	standard cubic meters per minute
SCO	synchronous connection oriented
SCOT	support coated open tubular (column)
SCR	silicon-controlled rectifier
SCS	sample control system
SD	component in leg has failed safe and failure has been detected
SDIU	Scanivalve digital interface unit
SDN	send data with no acknowledgement
SDS	smart distributed system
SEA	spokesman election algorithm
sec	second, also s
SER	sequence of event recorder
SFC	sequential function chart
SFD	system flow diagram or start of frame delimiter
SFF	safe failure fraction
SFI	sight flow indicator
SFR	spurious failure rate
S.G.	specific gravity, also sp. gr.
SHE	standard hydrogen electrode
SHS	sample handling system
SID	system identification digit (number)
SIF	safety instrumented function
SIG	special interest group

© 2003 by Béla Lipták

SIL	safety integrity level
sin	sine, trigonometric function
SIS	safety instrumented system
SISO	single-input single output
SG, SpG	specific gravity; also sp. gr.
SIL	safety integrity level
SIS	safety instrumented system
SKU	stock keeping units
SLAMS	state and local air monitoring stations
SLC	safety life cycle
slph	standard liters per hour
slpm	standard liters per minute
SMR	specialized mobile radio
SMTP	simple mail transfer (management) protocol
S/N	signal-to-noise (ratio)
SNG	synthetic natural gas
SNMP	simple network management protocol
SNR	signal-to-noise ratio
SOAP	simple object access protocol (an Internet protocol that provides a reliable stream-oriented connection for data transfer)
SOE	sequence of events
SONAR	sound navigation and ranging
SOP	standard operating procedure
SP	set point
SPC	statistical process control
SPDT	single-pole, double-pole throw (switch)
SPL	sound pressure level or sound power level
SPRT	standard platinum resistance thermometer
SPST	single-pole, single-throw (switch)
sq	square, squared
SQC	statistical quality control
SQL	structured (or standard) query language
Sr	steradian, symbol for SI unit of solid angle measurement
SRD	send and request data with reply
SRS	safety requirements specification
SRV	safety relief valve
SS	stainless steel
SSL	secure socket layers
SSU	Saybolt seconds universal
std.	standard
ST	structural text
STEL	short-term exposure limit
STEP	standard for the exchange of product model data
STP	shielded twisted pair, or standard temperature and pressure, corresponding to 70°F (21.1°C) and 14.7 psia (1 atm abs)
STR	spurious trip rates
SU	security unit or component in leg has failed safe and failure has not been detected
SUS	Seybold universal seconds
SV	secondary variable or safety valve
S/W	software

T

T	(1) ton (metric = 1000 kg), (2) time, (3) thickness
T	(1) temperature, (2) tera, prefix meaning 10^{-12}, (3) period (= 1/Hz, in seconds), (4) tesla, symbol for derived SI unit of magnetic flux density, webers per square meter, Wb/m^2
$T^1/_2$	half life
tan	tangent, trigonometric function
TAS	thallium arsenic selenide
tau, τ	process time constant (seconds)
TBM	tertiary butyl mercaptan
t/c	thermal coefficient of linear expansion
TC	thermocouple, temperature controller, or total carbon
TCD	thermal conductivity detector
TCP	transmission control protocol
TCP/IP	transmission control protocol/internet protocol
TCV	temperature control valve
td	process dead time (seconds)
T_d	derivative time (in seconds) of a PID controller
TDLAS	tunable diode laser absorption spectroscopy
TDM	time division multiplexing
TDMA	time division multiple access
TDR	time domain reflectometry
T/E	thermoelectric
TEM	transmission electron microscope
TG	thermogravimetry
Ti	integral time (in seconds) of a PID controller
TI	time interval between proof tests (test interval), temperature indicator
TIC	temperature indicating controller or total inorganic carbon
TIFF	tagged image file format
TISAB	total ionic strength adjustment buffer
TLV	threshold limit value
TMP	thermomechanical pulp
TMR	triple modular redundancy
TN	total nitrogen
TOC	total organic carbon
TOD	total oxygen demand
TOF	time of flight
TQM	total quality management
TOP	technical and office protocol
TR	temperature recorder
T/R	transmit/receive
TRC	temperature recording controller
T.S.	tensile strength
TTFM	transit time flow measurement
TTP	through the probe
TV	tertiary variable

© 2003 by Béla Lipták

°Tw	Twaddell degrees of liquid density
TWA	time weighed average

U

u	prefix = 10^{-6}, used incorrectly when the Greek letter μ is not available
UART	universal asynchronous receiver transmitter
UBET	unbiased estimation
UCMM	unconnected message manager
UDP	user/universal data protocol (an Internet protocol with low overhead but no guarantee that communication was successful)
UEL	upper explosive limit
$u_{fb}(k)$	feedback controller output
UFD	utility flow diagram
$u_{ff}(k)$	feedforward controller output
UHF	ultra-high frequency
UHSDS	ultra-high-speed deluge system
u(k)	controller output
UML	universal modeling language
UPS	uninterruptible power supply
UPV	unfired pressure vessel
URL	upper range limit
URV	upper range value
USB	universal serial bus
UTP	unshielded twisted pair
UTS	ultimate tensile stress
UUP	unshielded untwisted pair
UV	ultraviolet
UV-VIS-NIR	ultraviolet-visible-near infrared

V

v	velocity
V	volt, symbol for derived SI units of voltage, electric potential difference and electromotive force, watts per ampere, W/A
Vac	voltage, alternating current
V&V	verification and validation
VBA	Visual Basic for Applications
VDF	vacuum fluorescent display
VDT	video display tube
VDU	video display unit
vert.	vertical
VFD	variable frequency drive
VFIR	very fast infrared
VHF	very high frequency
VIS	visible
V-L	vapor-liquid (ratio)
VLF	very low frequency
V/M	voltmeter
VME	Virsa Module Europa (IEEE 1014–1987)
VMS	vibration monitoring system
VOC	volatile organic compounds
VR	virtual reality
VRML	virtual reality modeling language
vs.	versus

W

w	(1) width, (2) mass flow rate
W	(1) watt, symbol for derived SI unit of power, joules per second, J/s, (2) weight (also wt)
w.	water
WAN	wide area network
Wb	weber, symbol for derived SI unit of magnetic flux, volt-seconds, V·s
WCOT	wall coated open tubular (column)
WDXRF	wavelength dispersion x-ray fluorescence
WG	standard (British) wire gauge
wh	white (wiring code color for AC neutral conductor)
WI	Wobbe index
WLAN	wireless local area network
WPAN	wireless personal area network
WS	workstation
wt	weight, also W

X

X	reactance in ohms
XML	extensible markup language
x-ray	electromagnetic radiation with a wavelength <100 Å
XRF	x-ray fluorescence
XYZ	tristimulus functions

Y

Y	expansion factor
y(k)	process output
yd	yard (= 0.914 m)
yr	year

Z

Z	(1) atomic number (proton number), (2) electrical impedance (complex), expressed in ohms
ZEB	zero energy band

© 2003 by Béla Lipták

SOCIETIES AND ORGANIZATIONS

AATCC	American Association of Textile Chemists and Colorists
ACC	American Chemistry Council
ACGIH	American Conference of Governmental Industrial Hygenists
ACS	American Chemical Society
AGA	American Gas Association
AIA	Automatic Imaging Association
AIChE	American Institute of Chemical Engineers
AMTEX	American Textile Partnership
ANSI	American National Standards Institute
AOCS	American Oil Chemists Society
APHA	American Public Health Association
API	American Petroleum Institute
ARI	Air Conditioning and Refrigeration Institute
ASA	American Standards Association
ASCE	American Society of Civil Engineers
ASME	American Society of Mechanical Engineers
ASRE	American Society of Refrigeration Engineers
ASTM	American Society for Testing and Materials, or ASTM International
AWWA	American Water Works Association
BSI	British Standards Institution
CARB	California Air Resources Board
CCITT	Consultative Committee for International Telegraphy and Telephony
CENELEC	European Committee for Electrotechnical Standardization
CIE	Commission International del'Eclairage
CII	Construction Industry Institute
CIL	Canadian Industries Limited
CPAC	Center for Process Analytical Chemistry
CSA	Canadian Standards Association
DARPA	Defense Advanced Research Projects Agency
DIERS	Design Institute for Emergency Relief Systems
DIN	Deutsche Institut fuer Normung
DOD	Department of Defense (United States)
DOE	Department of Energy
DOT	Department of Transportation
EIA	Electronic Industries Association
EIA/TIA	Electrical Industries Alliance/Telecommunications Industries Alliance
EPA	Environmental Protection Agency
EPRI	Electric Power Research Institute
EXERA	Association des Exploitants d'Equipements de Mesure, de Régulation et d'Automatisme, an instrument user's association based in France
FCI	Fluid Control Institute
FDA	Food and Drug Administration
FF	Fieldbus Foundation
FIA	Fire Insurance Association
FM	Factory Mutual
FMRC	Factory Mutual Research Corporation
FPA	Fire Protection Association
FSEC	Florida Solar Energy Center
GERG	Groupe Europeen de Recherches GaziSres (European Gas Research Group), Brussels
GRI	Gas Research Institute
HCF	HART Communication Foundation
IAEI	International Association of Electrical Inspectors
ICE	Institute of Civil Engineers
ICEA	Insulated Cable Engineer's Association
IEC	International Electrotechnical Commission
IEEE	Institute of Electrical and Electronic Engineers
IETF	Internet Engineering Task Force
IGT	Institute of Gas Technology
IPTS	International Practical Temperature Scale
IrDA or IRDA	Infrared Data Association
ISA	Instrumentation, Systems, and Automation Society
ISO	International Standards Organization
ISSeP	International Soros Science Education Program
ISTM	International Society for Testing and Materials

© 2003 by Béla Lipták

ITA	Instrumentation Testing Association
JBF	Japan Batch Forum
JPL	Jet Propulsion Laboratory
KEPRI	Korean Electric Power Research Institute
LCIE	Laboratoire Central des Industries Electriques
LPGA	National LP-Gas Association
MCA	Manufacturing Chemists' Association
NAMUR	Normen-Arbeitsgemeinschaft für Meß-und Regulungstechnik in der Chemischen Industry (German standardization association for process control)
NASA	National Aeronautics and Space Administration
NBFU	National Board of Fire Underwriters
NBS	National Bureau of Standards
NEMA	National Electrical (Equipment) Manufacturers Association
NEPSI	National Supervision and Inspection Center for Explosion Protection and Safety Instrumentation
NFPA	National Fire Protection Association
NIOSH	National Institute of Occupational Safety and Health
NIST	National Institute of Standards and Technology
NRC	Nuclear Regulatory Commission
NSC	National Safety Council
NSPE	National Society of Professional Engineers
OSHA	Occupational Safety and Health Administration
OTS	Office of Technical Services
SAE	Society of Automotive Engineers
SAMA	Scientific Apparatus Manufacturers Association
SIREP	An international instrument user's association based in the United Kingdom
TAPPI	Technical Association of the Pulp and Paper Industry
TIA	Telecommunications Industries Alliance
UL	Underwriters Laboratories, Inc.
USASI	USA Standard Institute
USNRC	U.S. Nuclear Regulatory Commission
WBF	World Batch Forum
WEF	Water Environment Federation
WIB	An international instrument user's association based in the Netherlands

NOTES

1. Whenever the abbreviated form of a unit might lead to confusion, it should not be used, and the term should be written out in full.
2. The values of SI equivalents were rounded to three decimal places.
3. The words "meter" and "liter" are used with their accepted English spelling instead of those in European standards (i.e., metre and litre).

© 2003 by Béla Lipták

General Considerations

1

1.1
FLOWSHEET SYMBOLS AND P&I DIAGRAMS 4

Scope 4
- General 4
- Application to Industries 4
- Application to Work Activities 5
- Application to Classes of Instrumentation and to Instrument Functions 5
- Extent of Loop and Functional Identification 5
- Extent of Symbolization 5
- Inclusion of the New S5.1 Standard (now ANSI/ISA-5.01.01) in User/Owner Documents 5

Definitions Related to Flowchart Diagram Symbology 6
- General 6
- Definitions Related to Flowsheet Symbology 6

Identification System Guidelines 9
- General 9
- Instrument Index 10
- Guideline Modifications 10
- Multipoint, Multivariable, and Multifunction Devices 10
- System Identification 10
- Loop Identification Number 10

Identification Letter Tables 11
- General 11

Graphic Symbol System Guidelines 19
- General 19
- Guideline Modifications 19
- Instrument Line Symbols 19
- Measurement and Control Devices and/or Function Symbols 19
- Fieldbus P&ID Examples: DeviceNet 22

Multipoint, Multifunction, and Multivariable Devices and Loops 23

Fieldbus Devices, Loops, and Networks 28
- Comments and Exceptions (Including Non-ISA Industrial Practice) 28

P&IDs: Practical Aspects and Practices in the EPC Industry 28

1.2
FUNCTIONAL DIAGRAMS AND FUNCTION SYMBOLS 31

ISA Functional Diagramming (EX-SAMA) 31
- Instrument and Control Systems Functional Diagramming 31
- Equivalent P&ID Loop, Functional Instrument and Electrical Diagrams 31
- Functional Diagramming Symbol Tables 32

1.3
INSTRUMENT TERMINOLOGY AND PERFORMANCE 46

Introductory Notes 46
- Operating Conditions vs. Performance 47

Sources and References 47

Definition of Terms 47

Test Procedures 74
- Calibration Cycle 75

© 2003 by Béla Lipták

Calibration Curve 75
Test Procedures 75
References 77

1.4 SYSTEM ACCURACY 78

Definitions of Terms 78
Language, Terminology, and Reality 78
Clarifying the "Accuracy" Statement 79
Terminology of Inaccuracy and Repeatability 79
The Accuracy Statement 80
Flow Measurement Example 80
Analog and Linear Devices—Traditional Magnetic Flowmeters 81
Analog, Nonlinear—Orifice Plates 81
Digital Linear—Turbine Flowmeter 82
Combined System Accuracy 83
Basis 1 83
Basis 2 83
Temperature and Pressure Effects 84
Repeatability vs. Total Error 85
References 85
Bibliography 85

1.5 UNCERTAINTY CALCULATIONS 86

Uncertainty and Error 86
Classifying Error Sources and Their Uncertainties 87
The ISO Classification of Errors and Uncertainties 87
ISO Type A Uncertainties and Errors 87
ISO Type B Uncertainties and Errors 87
Engineering Classification of Errors and Uncertainties 89
Random Errors and Uncertainties 89
Systematic Errors and Uncertainties 89
Total Uncertainty 90
ISO Total Uncertainty 90
Engineering Total Uncertainty 90
Calculation Example 90
ISO Uncertainty Calculation Example 91
Engineering Uncertainty Calculation Example 91
Summary 91
References 91
Bibliography 92

1.6 CONFIGURING INTELLIGENT DEVICES 93

Design Feature Recommendations 93
Costs 93
Introduction 93
Configuration Tools 94
Device Configuration 95
Identification 96
Calibration 97
Monitoring 98
Simulation 98
Diagnostics 98
Reference 99

1.7 INSTRUMENT INSTALLATION 100

Cost 100
Installation Documentation 100
Physical vs. Schematic Documents 100
Safety in Design 100
Pipe and Tube Material 102
Electrical Installations in Potentially Explosive Locations 103
Physical Support 103
Process Industries Practices 104
Bibliography 104

1.8 INSTRUMENT CALIBRATION 108

Introduction 108
Calibration of Pressure Sensors 108
As-Found and As-Left Data 109
Hysteresis 110
Calibration Traceability 110
Linearity and Damping Adjustments 110
Automated Calibration Equipment 111
Calibration of Temperature Sensors 111
Calibration Intervals 112
Calibration of Smart Instruments 112
Assessment of Accuracy 112
Calibration and Range Setting 112
References 113

1.9 RESPONSE TIME AND DRIFT TESTING 114

Fundamentals of Response Time Testing 114
Laboratory Testing 115
Testing of Temperature Sensors 115
Testing of Pressure Sensors 115
In Situ Response Time Testing 116
Testing of Temperature Sensors 117
Testing RTDs 117
Testing Thermocouples 118
Analysis of LCSR Test Results 119
Applications of LCSR Testing 120
In Situ Testing of Pressure Sensors 121
Analyzing of Noise Data 121
On-Line Verification of Calibration 122

© 2003 by Béla Lipták

Drift Evaluation Using Multiple Sensors 122
Empirical Models, Neural Networks 123
References 125

1.10
REDUNDANT AND VOTING SYSTEMS 126

Introduction 126
Hardware Redundancy 126
Software Redundancy 127
Fault-Tolerant Computer System Design 128
Field Instrument Redundancy and Voting 129
Single-Transmitter Configuration 129
Two-Transmitter Configuration 130
Three-Transmitter Configuration 130
Diagnostic Coverage 130
Engineering Redundant Measures 132
Complex Control Loops 132
Final Control Elements 132
Availability Considerations 133
References 134
Bibliography 134

1.11
INSTRUMENT EVALUATION 136

Evaluation Results 136
Organization 137
Evaluation Methodology 137
System Configuration 137
System Functions 139
Properties 139
Test Conditions 140
Evaluation Techniques 140
Relevant Standards 141
Bibliography 141

1.12
BINARY LOGIC DIAGRAMS 142

Logic Diagrams 142
Logic Symbols 143
Preparation of Logic Diagrams 143
Diagram Interpretation 146
Active and Passive Logic 148
Final Caution 148
Bibliography 149

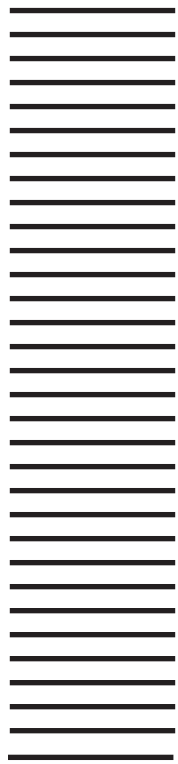

© 2003 by Béla Lipták

1.1 Flowsheet Symbols and P&I Diagrams*

G. PLATT (1982) **B. G. LIPTÁK** (1995) **J. E. JAMISON, A. ROHR** (2003)

The purpose of this section is to help the reader establish a uniform means of depicting and identifying all classes of instruments, instrumentation systems, and functions used for measurement, monitoring, and control. It is done by presenting a designation system of graphic symbols and identification codes.

It must be noted that a significant part of this section has been extracted from the revision work of the ISA** SP5.1 subcommittee, and much of it has been based on draft working documents being utilized at the time of this writing, documents with which one of the authors has been actively involved. Other portions of this section, dealing with certain symbols, graphics, and practical tips, are based on the authors' experience in industry and are not part of the SP5.1 subcommittee's proposed forthcoming revision.

A disclaimer to any future ISA standards documents is hereby stated: The reader is cautioned that the draft ISA document that provided much of the information in this section has not been approved as of the time of this writing. It cannot be presumed to reflect the position of ISA or any other committee, society, or group. The intent is to pass along to the reader the best and latest thinking on this subject at this point in time, although many items are contentious and are ultimately subject to change in the continuously evolving fields of digital control systems and digital data buses.

Another view of flowsheet and piping and instrument diagram (P&ID) symbols and diagrams covered in this section is in terms of practical aspects and practices used by instrumentation and control practitioners in the engineering, procurement, and construction (EPC) industry.

SCOPE**

General

The procedural needs of various users are different, and these differences are recognized, when they are consistent with the objectives of this standard, by providing alternative symbol and identification methods.

A limited number of examples are provided later that illustrate (with the emphasis on digital systems/loops) how to accomplish the following:

a) Design an identification system and construct an identification number
b) Use graphic symbols to construct the following:
   1) Schematic diagrams of instrument devices and functions in monitoring and control loops
   2) Schematic and ladder diagrams of electrical circuits
c) Add information and simplify diagrams

Examples of symbol applications are generally shown as applied in the oil and chemical processing industries as in the original version of this standard, but the principles shown are applicable to most other industries.

Specific applications are to be addressed in greater detail and will be forthcoming in the planned S5.1 (now ANSI/ISA-5.01.01) series of Technical Reports dedicated to the various processing, generating, and manufacturing industries. These will include processes such as continuous and batch chemical, oil, and metal refining, pulp and paper, water and waste treatment, power generation and distribution, and discrete parts manufacturing.

Application to Industries

The proposed revised ISA S5.1 (now ANSI/ISA-5.01.01) standard will be suitable for use in the above-mentioned process industries and in discrete parts manufacturing where the use of control system schematic and functional diagramming is required to describe the relationship with processing equipment and the functionality of measurement and control equipment.

Certain fields, such as astronomy, navigation, and medicine, use very specialized instruments that are different from conventional industrial process instruments. No specific effort was made to have the ISA standard meet the requirements of those fields. However, it is expected that, in certain areas such as control functional diagrams, they will prove applicable for such specialized fields.

* Used with permission of the Instrument, Systems and Automation Society.
**Formerly called the Instrument Society of America.

© 2003 by Béla Lipták

Application to Work Activities

The proposed revised ISA S5.1 (now ANSI/ISA-5.01.01) standard will be suitable for use whenever reference to measurement and control instrumentation, control device functions, or software applications functions is required for the purposes of symbolization and identification. Such references may be required for the following uses as well as others:

a) Design sketches
b) Teaching examples
c) Technical papers, literature, and discussions
d) Instrumentation system diagrams, loop diagrams, logic diagrams, and functional diagrams
e) Functional descriptions
f) Conceptual drawings: process flow diagrams (PFDs) and utility flow diagrams (UFDs)
g) Construction drawings: engineering flow diagrams (EFDs), mechanical flow diagrams (MFDs), piping and instrument diagrams (P&IDs), and system flow diagrams (SFDs)
h) Specifications, purchase orders, manifests, and other lists
i) Identification and tag numbering of instruments and control functions
j) Installation, operating, and maintenance instructions, drawings, and records

The standard is intended to provide sufficient information to enable anyone with a reasonable amount of process and instrumentation knowledge to understand the methods of measurement and process control.

It is not necessary to possess the detailed knowledge of a specialist in instrumentation and control systems to understand the standard.

Application to Classes of Instrumentation and to Instrument Functions

The symbolism and identification methods provided in the standard are applicable to all classes and types of measurement and control instruments and functions.

The methods can be used for, but are not limited to, describing and identifying the following:

a) Discrete (individual) instruments and their functions
b) Shared display and control functions
c) Distributed control functions
d) Computer control functions
e) Programmable logic controller display and control functions
f) Application software display and control functions

Extent of Loop and Functional Identification

The ISA S5.1 standard (now ANSI/ISA-5.01.01) provides identification codes and methods for the alphanumeric identification of monitoring and controlling loops, instruments, and functions. The user is free to apply additional identification by serial, equipment, unit, area, or plant number or any other additional means required for the unique identification of a loop, instrument, or function.

A unique function identification number shall identify each instrument, its inherent functions, and each configurable function that requires or allows a user-assigned, unique microprocessor or computer address required by a loop.

Extent of Symbolization

The standard provides symbol sets for the graphic depiction of limited or total functionality for instruments and other devices, entire monitor/control loops, or control circuits. The amount of detail to be shown by the use of symbols depends on the purpose and audience for which the document is being prepared.

A sufficient number of symbols should be used to show the functionality of the instrumentation and control loop being depicted. However, it is not considered necessary to provide a symbol for each instrument device and each function within a loop.

Additional construction, fabrication, installation, and operation details of an instrument are better described in a suitable specification, data sheet, drawing, sketch, or other document intended for individuals who require such details.

Inclusion of the New S5.1 Standard (now ANSI/ISA-5.01.01) in User/Owner Documents

This is a new concept in ISA standards at this point in time. Mandatory use of the standard is required by users/owners based on the following statements.

When the latest issue of the standard is included in user/owner's engineering and/or design guidelines or standards by reference and

a) "Without exception," then the standard in its entirety shall be mandatory.
b) "With exceptions," then the parts of the standard:
   1) "Excepted to" shall be fully described and detailed.
   2) "Not excepted to" shall be mandatory.

When a previous issue of the standard is included by reference with or without exception in user/owner's engineering and design guidelines or standards, that standard in part or in its entirety shall be mandatory until such time as the user/owner's guidelines or standards are revised. When the new issue is used as a guide in the preparation of user/owner's guidelines or standards, symbols and letter and symbol meanings different from those in the standard shall be fully described and detailed.

Symbols and the meanings of letters and symbols from previous issues of the S5.1 standard (now ANSI/ISA-5.01.01) that are different from those contained in this new issue may continue to be used, provided that they are fully described and detailed.

© 2003 by Béla Lipták

DEFINITIONS RELATED TO FLOWCHART DIAGRAM SYMBOLOGY

See statement of permission on page 4.

General

For the purpose of understanding the ISA S5.1 standard (now ANSI/ISA-5.01.01), the following definitions and terminology apply. For a more complete treatment, see ISA-S51.1 and the ISA-S75 series of standards. Terms italicized within a definition are also defined in this clause.

Definitions Related to Flowsheet Symbology

Accessible A feature of a discrete device function or feature of an interactive shared system function or feature that can be used or seen by an operator for the purpose of performing control operations, such as setpoint changes, auto-manual transfer, or on–off operations.

Alarm An indicating instrument that provides a visible and/or audible indication if and when the value (or rate of change value) of a measured or initiating variable is out of limits, has changed from a safe to an unsafe condition, and/or has changed from a normal to an abnormal operating state or condition.

a) Actuation may be by binary switch or function or analog transmitter or function.
b) Indication may be by annunciator panel, flashing light, printer, buzzer, bell, horn, siren, and/or shared graphic display systems.

Analog A signal or device that has no discrete positions or states and changes value as its input changes value. When used in its simplest form, as in "analog signal" as opposed to "binary signal," the term denotes a continuously varying quantity.

Application software Software specific to a user application that is configurable and in general contains logic sequences, permissive and limit expressions, control algorithms, and other code required to control the appropriate input, output, calculations, and decisions. See also *software*.

Assignable A system feature permitting channeling or directing of a signal from one device to another without the need for changes in wiring either by means of patching, switching, or via keyboard commands to the system.

Auto-manual station A manual loading station or control station that also provides switching between manual and automatic control modes of a control loop. See also *manual loading station.*

Balloon An alternative term for the circular symbol used to denote and identify the purpose of an instrument or function that may contain a tag number. See preferred term, *bubble.*

Behind the panel A location that, in a broad sense, means "not normally accessible to an operator," such as the rear of an instrument or control panel, an enclosed instrument rack or cabinet, or an instrument rack room within an area that contains a panel.

Binary A signal or device that has only two discrete positions/states and, when used in its simplest form, as in "binary signal" as opposed to "analog signal," the term denotes an "on–off " or "high–low" state.

Board A freestanding structure consisting of one or more sections, cubicles, or consoles that has groups of discrete (individual) instruments mounted on it, houses the operator–process interface, and is chosen to have a unique designation. See *panel.*

Bubble The preferred term for the circular symbol used to denote and identify the purpose of an instrument or function that may contain a tag number. See alternative term, *balloon.*

Communication link A wire, cable, or transmitter network or bus system that connects dedicated microprocessor-based and computer-based systems so that they share a common database and communicate according to a rigid protocol in a hierarchical and/or peer-to-peer relationship. See also *data link.*

a) Wires or cables may be of twisted pair, coaxial, telephone, or fiber optic construction.
b) Transmitters may be radio, telephone, and/or microwave devices.

Computer control system A system in which all control action takes place within a control computer, such as a mainframe computer or minicomputer, which may be single or redundant.

Computing device Preferred term for a device that performs one or more calculations or logic operations, or both, and transmits one or more resultant output signals. See also *computing relay.*

Computing function A hardware or software function that performs one or more calculations or logic operations, or both, and transmits one or more resultant output signals.

Computing relay Alternative term for a device that performs one or more calculations or logic operations, or both, and transmits one or more resultant output signals. See also *computing device.*

Configurable A term for devices or systems whose functional or communication characteristics can be selected or rearranged through setting of program switches, application software, fill-in-the-blank forms, pull-down menus, entered values or text, or other methods other than rewiring as a means of altering the configuration.

Controller A device having an output that varies to regulate a controlled variable in a specified manner that may be a self-contained analog or digital instrument or may be the equivalent of such an instrument in a shared-control system.

© 2003 by Béla Lipták

a) An automatic controller varies its output automatically in response to a direct or indirect input of a measured process variable.
b) A manual controller, or manual loading station, varies its output in response to a manual adjustment; it is not dependent on a measured process variable.
c) A controller may be an integral element of other functional elements of a control loop.

Control station A manual loading station that also provides switching between manual and automatic control modes of a control loop. See also *auto-manual station*.
a) The operator interface of a distributed control system may be referred to as a *control station*.

Control valve A device, other than a common, hand-actuated process block valve or self-actuated check valve, that directly manipulates the flow of one or more fluid process streams.
a) The designation "hand control valve" shall be limited to hand-actuated valves that, when used for process throttling, require identification as an instrument or control device.

Converter A device that receives information as one form of an instrument signal and transmits an output signal as another form, such as a current to pneumatic signal converter.
a) An instrument that changes a sensor's output to a standard signal is properly designated as a transmitter and not a converter. Typically, a temperature element (TE) connects to a transmitter (TT) and not to a converter (TY).
b) A converter is sometimes referred to as a *transducer*, a completely general term not recommended for signal conversion.

Data link A wire, cable, or transmitter network or bus system that connects field located devices with dedicated microprocessors so that they share a common database and communicate according to a rigid protocol in a hierarchical or peer-to-peer relationship to other such devices and/or compatible microprocessor-based systems. See also *communication link*.
a) Wire or cable may be of twisted-pair, coaxial, telephone, or fiber optic construction.
b) Transmitters may be radio, telephone, or microwave devices.

Detector A device that is used to detect the presence of something, such as flammable or toxic gases or discrete parts. See also *primary element* and *sensor*.

Device A piece of instrument hardware that is designed to perform a specific action or function, such as a controller, indicator, transmitter, annunciator, or control valve.

Digital A signal or device that generates or uses binary digit signals to represent continuous values or discrete states.

Discrete A term used to describe the following:
a) Signals that have any number of noncontinuous distinct or defined states or positions. Binary signals are a subset. See *binary*.
b) Instruments or devices that have separate or individual entities, such as a single-case controller or recorder.

Distributed control system Instrumentation, input/output devices, control devices, and operator interface devices that, in addition to executing stated control and indication functions, permits transmission of control, measurement, and operating information to and from single- or multiple-user specifiable locations, connected by single or multiple communication links.

Field instrument An instrument that is not mounted on a panel or console or in a control room but commonly in the vicinity of its primary element or final control element. See *local instrument*.

Final control element A device, such as a control valve, that directly controls the value of the manipulated variable of a control loop.

Function The purpose of, or the action performed by, a device or application software.

Identification The sequence of letters or digits, or both, used to designate an individual instrument, function, or loop.

Instrument A device used for direct or indirect measurement, monitoring, or control of a variable.
a) Includes primary elements, indicators, controllers, final control elements, computing devices, and electrical devices such as annunciators, switches, and pushbuttons.
b) Does not apply to an instrument's internal components or parts, such as receiver bellows or resistors.

Instrumentation A collection of instruments or functions or their application for the purpose of measuring, monitoring, controlling, or any combination of these.

Local instrument An instrument that is not mounted on a panel or console or in a control room but commonly is in the vicinity of its primary element or final control element. See *field instrument*.

Local panel A panel that is not a central or main panel and is commonly located in the vicinity of plant subsystems or subareas (sometimes called a *local instrument panel*).
a) The term *local panel instrument* should not be confused with *local instrument* or *local instrument panel*.

Loop A combination of two or more instruments or control functions arranged so that signals pass from one to another for the purpose of measurement indication or control of a process variable.

Manual loading station A device or function that has a manually adjustable output and may also have indicators, lights, and/or other functions that are used

© 2003 by Béla Lipták

to actuate or modulate one or more devices. It does not provide switching between auto-manual modes of a control loop.

Measurement The determination of the existence or magnitude of a process variable.

Monitor A general term for an instrument or instrument system used to measure or sense the status or magnitude of one or more variables for the purpose of deriving useful information. This sometimes means an analyzer, indicator, or alarm.

Monitor light A light that indicates which of a number of normal (but not abnormal) conditions of a system or device exists. See also *pilot light.*

Multifunction devices Devices (controllers) that receive one or more input signals and send out two or more output signals or perform two or more functions. See *multipoint* and *multivariable devices*.

Multipoint devices Indicators or recorders that may be single or multivariable type and that receive input signals from two or more primary elements or transmitters. See *multifunction devices* and *multivariable devices*.

Multivariable devices Devices (indicators, recorders, or controllers) that receive two or more input signals and send one output signal. See *multifunction* and *multipoint devices*.

Panel A freestanding or built-in structure, consisting of one or more sections, cubicles, consoles, or desks, in which groups of instrument hardware are mounted. It could house the operator–process interface and is given a unique designation.

Panel-mounted An instrument or other device that is mounted in a panel or console and is accessible for an operator's normal use.

a) A function that is normally accessible to an operator in a shared-display system is the equivalent of a discrete panel-mounted device.

Pilot light A light that indicates which of a number of normal conditions of a system or device exists. It is not an alarm light that indicates an abnormal condition. See also *monitor light.*

Primary element An external or internal instrument, or a system element, that quantitatively converts the measured variable into a form suitable for measurement. See also *detector* and *sensor*:

a) An orifice plate is an external primary element.
b) The sensing portion of a transmitter is an internal primary element.

Process Any operation or sequence of operations involving a change of energy, state, composition, dimension, or other properties that may be defined with respect to zero or some other defined initial value.

Process variable Any measurable property of a process. Used in this standard to apply to all variables other than instrument signals between devices in a loop.

Program A repeatable sequence of actions that defines the state of outputs as a fixed relationship to the state of inputs.

Programmable logic controller A controller, usually with multiple inputs and outputs, that contains an alterable program that is

a) Typically used to control binary and/or discrete logic or sequencing functions.
b) Also used to provide continuous control functions.

Relay A device whose function is to pass on information in an unchanged form or in some modified form; often used to mean the preferred term, *computing device.*

a) *Relay* is a term applied specifically to an electric, pneumatic, or hydraulic switching device that is actuated by a signal, and to functions performed by a relay.

Scan To sample or multiplex, in a predetermined manner, each of a number of variables periodically and/or intermittently.

a) A scanning or multiplexing device is often used to ascertain the state or value of a group of variables and may be associated with other functions such as recording and alarming.

Sensor A separate or integral part, or function, of a loop or an instrument that first senses the value of a process variable. It assumes a corresponding predetermined and intelligible state and/or generates an output signal indicative of or proportional to the process variable. See also *detector* and *primary element.*

Setpoint An input variable that sets the desired value of the controlled variable manually, automatically, or by means of a program in the same units as the controlled variable.

Shared control A feature of a control device or function that contains a number of preprogrammed algorithms that are user retrievable, configurable, and connectable. It allows user-defined control strategies or functions to be implemented and is often used to describe the control features of a distributed control system.

a) Control of multiple process variables can be implemented by sharing the capabilities of a single device of this kind.

Shared display The operator interface device (such as video, light emitting diode, liquid crystal, or other display unit) used to display process control information from a number of sources at the command of the operator. It is often used to describe the visual features of a distributed control system.

Software The programs, codes, procedures, algorithms, patterns, rules, and associated documentation required for the operation or maintenance of a microprocessor- or computer-based system. See also *application software*.

© 2003 by Béla Lipták

Software link The interconnection of system components via communications networks or functions via software or keyboard instruction.

Supervisory setpoint control system The generation of setpoint or other control information by a computer control system for use by shared control, shared display, or other regulatory control devices.

Switch A device that connects, disconnects, selects, or transfers one or more circuits and is not designated as a controller, relay, or control valve. As a verb, the term is also applied to a function performed by a switch.

Test point A process connection to which no instrument is permanently connected; it is intended for the temporary or intermittent connection of an instrument.

Transducer A general term for a device, which can be a primary element, transmitter, relay, converter, or other device, that receives information in the form of one or more physical quantities, modifies the information or its form if required, and produces a resultant output signal.

Transmitter A device that senses a process variable through the medium of a sensor or measuring element and has an output whose steady-state value varies only as a predetermined function of the process variable. The sensor can be an integral part, as in a direct connected pressure transmitter, or a separate part, as in a thermocouple-actuated temperature transmitter.

IDENTIFICATION SYSTEM GUIDELINES

See statement of permission on page 4.

General

This subsection establishes an identification system for instrument loop devices and functions. It is logical, unique, and consistent in application with a minimum of exceptions, special uses, and requirements. The identification system is used to identify instrumentation in text, sketches, and drawings when used with graphic symbols as described in the subsection titled "Graphic Symbol System Guidelines."

The identification system provides methods for identifying instrumentation required to monitor, control, and operate a processing plant, unit operation, boiler, machine, or any other system that requires measurement, indication, control, modulation, and/or switching of variables.

Primary instrumentation, hardware and software devices, and functions that measure, monitor, control, and calculate, and application software functions that require or allow user-assigned identities, shall be assigned both loop and functional identification.

Secondary instrumentation, such as hardware devices that measure and monitor, as well as level glasses, pressure gauges, and thermometers, shall be assigned only a functional identification.

Loop and functional identification shall be assigned in accordance with the guidelines in the standard or with modified guidelines based on the standard, established by the user or owner of the plant, unit, or facility in which the instrumentation is to be installed.

A unique loop identification number shall be assigned to identify each monitoring and control loop. A unique instrument identification/tag number based on the loop identification number shall be assigned for each monitoring or control loop to identify each of the following:

a) Hardware device and integral functions
b) Application software functions that require or allow a user-assigned unique microprocessor or computer address

A monitor or control loop consists of some or all of the following (as indicated):

a) Measurement of the process variable (monitor and control):
   1) Measuring element device, such as an orifice plate or thermocouple
   2) Measurement transmitter, with an integral measuring element, such as a pressure transmitter or without an integral measuring element, such as a temperature transmitter and thermocouple
b) Conditioning of the measurement or input signal (monitor and control):
   1) Calculating devices
   2) Calculating functions
   3) Safety barriers
c) Monitoring of the process variable (monitor):
   1) Indicating or recording device
   2) Application software display function
d) Controlling of the process variable (control):
   1) Indicating or recording control device
   2) Application software control function
e) Conditioning of the controller or output signal (control):
   1) Calculating devices
   2) Calculating functions
f) Modulation of the manipulated variable (control):
   1) Control valve modulation or on–off action
   2) Manipulation of another control loop setpoint
   3) Limiting another control loop output signal

Secondary instrumentation shall be assigned instrument identification/tag numbers or other forms of identification in accordance with the guidelines established in the ISA standard or with modified guidelines based on the standard established by the user/owner of the plant, unit, or facility in which the instrumentation is to be installed.

Examples of instrument identification systems will be found in a future series of S5.1 (now ANSI/ISA-5.01.01) Technical Reports.

© 2003 by Béla Lipták

Instrument Index

Loop identification numbers and instrument identification/tag numbers shall be recorded in an instrument index (either manually generated or computerized instrument database), which shall be maintained for the life of the facility for the recording and control of all documents and records pertaining to the loops and their instrumentation and functions.

An instrument index shall contain references to all instrumentation data required by owner or government regulatory agency management-of-change requirements. It should contain, as a minimum, for each loop:

a) Loop identification number
b) Service description
c) Instrument identification/tag numbers
d) Piping and instrument (P&ID) drawing numbers
e) Instrument data sheet numbers
f) Location plan numbers
g) Installation detail drawing numbers

Guideline Modifications

These guidelines may be modified to suit the requirements of the following:

a) Existing user-designed identification and numbering schemes that are not included in this standard
b) Computer databases used for record keeping
c) Microprocessor-based monitoring or control systems

When modified guidelines are adopted, they shall be fully described and detailed in the user/owner's engineering or design standards.

Multipoint, Multivariable, and Multifunction Devices

Input and output devices and functions that are components of a multipoint device shall have tag suffixes that delineate between the different components.

Multivariable devices that receive two or more input signals, transmit one output signal, and have been assigned measured/initiating variable multivariable [U], shall have the following indicators:

a) Each different input shall be assigned its own loop identification number, and each output indicating, recording, switching, alarming, or other device and function that is actuated solely by a single variable, shall be assigned an instrument/tag number that identifies it as part of these loops.
b) Each indicating, recording, switching, alarming, or other device or function that is actuated by more than one of the multivariables shall be assigned an instrument/tag number that identifies it as part of the multivariable loop.

Multifunction devices that receive two or more input signals, send out two or more output signals, or perform two or more functions may be assigned readout/passive or output/active function multifunction [U] and shall have a loop number assigned according to the measured/initiating variable.

Loops that perform two or more functions from a single measured/initiating variable may have the following:

a) Each function assigned a unique instrument/tag number and shown on diagrams as multiple tangent bubbles for the integral functions and multiple individual bubbles for the nonintegral functions.
b) One readout/passive and/or output/active function designated by succeeding letter [U], for the integral functions and multiple individual bubbles for the nonintegral functions, and, if necessary, a note or comment defining the integral functions.

Graphic symbol examples of these loops are given later in this section.

System Identification

Instrumentation is often assembled into systems for various reasons including ease of purchase, ease of application, compatibility, and so on. These systems may need to be identified on drawings and in text.

Some of the more common instrumentation systems and the system codes for identifying them are the following:

ACS = Analyzer control system
BMS = Burner management system
CCS = Computer control system
CEMS = Continuous emissions monitoring system
DCS = Distributed control system
FDS = Flame detection system
MMS = Machine monitoring system
PCCS = Personal computer control system
PLC = Programmable logic controller
SIS = Safety instrumented system
VMS = Vibration monitoring system

Suffixes may be added to the instrumentation system codes [SC] when required as follows:

a) [SC] 1, [SC] 2, and so forth, when more than one system is used in a complex
b) [SC]-M, [SC]-L, when main and local systems are used in a unit
c) [SC]-[unit identifier]

Loop Identification Number

A loop identification number is a unique combination of letters and numbers that is assigned to each monitoring and control loop in a facility to identify the process or machine variable that is being measured for monitoring or control (see Table 1.1a).

© 2003 by Béla Lipták

TABLE 1.1a
Typical Loop Identification Number

					Measured/Initiating Variable			
10	-	P		-	*01	A		Loop identification number
10								Optional loop number prefix
	-							Optional punctuation
		P						Measured/initiating variable
				-				Optional punctuation
					*01			Loop number
						A		Optional loop number suffix
					First Letters			
10	-	P	D	-		*01	A	Loop identification number
10								Optional loop number prefix
	-							Optional punctuation
		P	D					First letters
		P						Measured/initiating variable
			D					Variable modifier
				-				Optional punctuation
						*01		Loop number
							A	Optional loop number suffix

See statement of permission on page 4.

Loop identification numbers are assigned as follows:

a) Numerals in parallel, serial, or parallel/serial sequences
b) Letters or letter combinations selected from Table 1.1c, Identification Letters (column 1, Measured/Initiating Variables and column 2, Variable Modifiers)

Loop identification number numerals shall be assigned to loop variables letters according to one of the following sequencing methods:

a) Parallel: duplicated numerical sequences for each loop variable letter or letter combination
b) Serial: the same numerical sequence regardless of loop variable letter or letter combination
c) Parallel/serial: parallel sequences for selected loop variable letters or letter combinations and a serial sequence for the remainder

Loop number numerical sequences are normally three or more digits, -*01, -*001, -*0001, and so on, where

a) -* can be any digit from 0 to 9
b) Coded digits are related to drawing numbers or equipment numbers
c) *00, *000, *0000, and so on are not used

Gaps may be left in any sequence to allow for the addition of future loops. (See Tables 1.1c through 1.1f for various combinations of allowable instrumentation identification/tag numbers.)

TABLE 1.1b
Typical Instrument Identification/Tag Number

10	-	P	D	A	L	-	*01	A	-	A	-	1		Loop identification number
10														Optional loop number prefix
	-													Optional punctuation
		P					*01	A						Loop number, measured variable
		P	D				*01	A						Loop number, first letters
						-								Optional punctuation
							*01							Loop number
								A						Optional loop number suffix
		P	D	A	L									Functional identification letters
		P	D											First letters
		P												Measured/initiating variable
			D											Variable modifier
				A	L									Succeeding letters
				A										Function identifier
					L									Function modifier
									-					Optional punctuation
										A				Tag number suffix
											-			Optional punctuation
												1		Tag number suffix

See statement of permission on page 4.

IDENTIFICATION LETTER TABLES

See statement of permission on page 4.

General

This clause provides in tabular form the alphabetic building blocks of the Instrument and Function Identification System in a concise, easily referenced manner.

Table 1.1c, Identification Letters, defines and explains the individual letter designators to be used as loop and functional identifiers in accordance with the guidelines of the subsection titled “Identification System Guidelines.”

The letters in Table 1.1c shall have the mandatory meanings as given in the table except as follows:

© 2003 by Béla Lipták

TABLE 1.1c

Identification Letters (proposed for the next revision of ISA S5.1 [now ANSI/ISA-5.01.01] at the time of this writing)

	First Letters (1)		*Succeeding Letters (15)*		
	Column 1 *Measured/Initiating Variable*	*Column 2* *Variable Modifier*	*Column 3* *Readout/Passive Function*	*Column 4* *Output/Active Function*	*Column 5* *Function Modifier*
A	Analysis		Alarm		
B	Burner, combustion		User's choice	User's choice	User's Choice
C	User's choice			Control	Close
D	User's choice	Differential, deviation			Deviation
E	Voltage		Sensor, primary element		
F	Flow, flow rate	Ratio			
G	User's choice		Glass, gauge, viewing device		
H	Hand				High
I	Current		Indicate		
J	Power		Scan		
K	Time, schedule	Time rate of change		Control station	
L	Level		Light		Low
M	User's choice				Middle, intermediate
N	User's choice		User's choice	User's choice	User's Choice
O	User's choice		Orifice, restriction		Open
P	Pressure		Point (test connection)		
Q	Quantity	Integrate, totalize	Integrate, totalize		
R	Radiation		Record		
S	Speed, frequency	Safety		Switch	
T	Temperature			Transmit	
U	Multivariable		Multifunction	Multifunction	
V	Vibration, mechanical analysis			Valve, damper, louver	
W	Weight, force		Well		
X	Unclassified	X-axis	Unclassified	Unclassified	Unclassified
Y	Event, state, presence	Y-axis		Auxiliary devices	
Z	Position, dimension	Z-axis		Driver, actuator, unclassified final control element	

See statement of permission on page 4.

a) The user shall assign a variable name to the user's choice letters in column 1 and a function name to the user's choice letters in columns 3 through 5 when such letters are used.
b) The user may assign meanings to the blanks in columns 2 through 5 if needed.

Table 1.1d, Allowable Loop Identification Letter Schemes, provides the allowable loop identification letters and combinations according to the loop identification number construction schemes.

The letters and combinations shall have the mandatory meanings as given in the table except as follows:

a) The user shall assign a variable name to the user's choice letters in the "First Letter" column.

Tables 1.1e and 1.1f, Allowable Function Identification Letter Combinations, provide allowable combinations of function identifying letters.

The letter combinations shall have the meanings given in the table, except as follows:

a) The user shall assign a variable and/or function to user's choice letters if used.
b) The user may assign a meaning to blanks if needed.
c) Cells marked N/A are combinations that shall not be allowed.

© 2003 by Béla Lipták

TABLE 1.1d

Allowable Loop Identification Letter Schemes

First Letters	Measured/Initiating Variable	Scheme 1	Scheme 2	Scheme 3	Scheme 4	Scheme 5	Scheme 6	Scheme 7(1)		Scheme 8(1)		Scheme 9(1)	
								Parallel	Serial	Parallel	Serial	Parallel	Serial
		Parallel Meas./Init. Var.	Parallel Meas./Init. Var. w/Var. Mod.	Parallel First Letters	Serial Meas./Init. Var.	Serial Meas./Init. Var. w/Var. Mod.	Serial First Letters	Measured/Initiating Variable		Measured/Initiating Variable w/Variable Modifier		First Letters	
A	Analysis	A-*01	A-*01	A-*01	A-*01	A-*01	A-*01	A-*01		A-*01		A-*01	
B	Burner, combustion	B-*01	B-*01	B-*01	B-*02	B-*02	B-*02		B-*01		B-*01		B-*01
C	User's choice	C-*01	C-*01	C-*01	C-*03	C-*03	C-*03		C-*02		C-*02		C-*02
D	User's choice	D-*01	D-*01	D-*01	D-*04	D-*04	D-*04		D-*03		D-*03		D-*03
E	Voltage	E-*01	E-*01	E-*01	E-*05	E-*05	E-*05		E-*04		E-*04		E-*04
F	Flow, flow rate		F-*01	F-*01		F-*06	F-*06			F-*01		F-*01	
FF	Flow ratio	F-*01	FF-*02		F-*06	FF-*07		F-*01		FF-*02			
FQ	Flow total		FQ-*03	FQ-*01		FQ-*08	FQ-*07			FQ-*03		FQ-*01	
G	User's choice	G-*01	G-*01	G-*01	G-*07	G-*09	G-*08		G-*05		G-*05		G-*05
H	Hand	H-*01	H-*01	H-*01	H-*08	H-*10	H-*09		H-*06		H-*06		H-*06
I	Current	I-*01	I-*01	I-*01	I-*09	I-*11	I-*10		I-*07		I-*07		I-*07
J	Power	J-*01	J-*01	J-*01	J-*10	J-*12	J-*11		J-*08		J-*08		J-*08
K	Time	K-*01	K-*01	K-*01	K-*11	K-*13	K-*12		K-*09		K-*09		K-*09
L	Level	L-*01	L-*01	L-*01	L-*12	L-*14	L-*13	L-*01		L-*01		L-*01	
M	User's choice	M-*01	M-*01	M-*01	M-*13	M-*15	M-*14		M-*10		M-*10		M-*10
N	User's choice	N-*01	N-*01	N-*01	N-*14	N-*16	N-*15		N-*11		N-*11		N-*11
O	User's choice	O-*01	O-*01	O-*01	O-*15	O-*17	O-*16		O-*12		O-*12		O-*12
P	Pressure		P-*01			P-*18				P-*01		P-*01	
PF	Pressure ratio	P-*01	PF-*02	P-*01	P-*16	PF-*19	P-*17	P-*01		PF-*02			
PK	Pressure schedule		PK-*03			PK-*20				PK-*03		PK-*03	
PD	Pressure difference		PD-*04	PD-*01		PD-*21	PD-*18			PD-*04			
Q	Quantity	Q-*01	Q-*01	Q-*01	Q-*17	Q-*22	Q-*19		Q-*13		Q-*13		Q-*13

(Continued)

© 2003 by Béla Lipták

TABLE 1.1d Continued

Allowable Loop Identification Letter Schemes

First Letters	Measured/Initiating Variable	Scheme 1	Scheme 2	Scheme 3	Scheme 4	Scheme 5	Scheme 6	Scheme 7(1)		Scheme 8(1)		Scheme 9(1)	
								Parallel	Serial	Parallel	Serial	Parallel	Serial
		Parallel Meas./Init. Var.	Parallel Meas./Init. Var. w/Var. Mod.	Parallel First Letters	Serial Meas./Init. Var.	Serial Meas./Init. Var. w/Var. Mod.	Serial First Letters	Measured/Initiating Variable		Measured/Initiating Variable w/Variable Modifier		First Letters	
R	Radiation	R-*01	R-*01	R-*01	R-*18	R-*23	R-*20		R-*14		R-*14		R-*14
S	Speed	S-*01	S-*01	S-*01	S-*19	S-*24	S-*21		S-*15		S-*15		S-*15
T	Temperature		T-*01			T-*25				T-*01		T-*01	
TF	Temperature ratio	T-*01	TF-*02	T-*01	T-*20	TF-*26	T-*22	T-*01		TF-*02			
TK	Temperature schedule		TK-*03			TK-*27				TK-*03		TD-*01	
TD	Temperature difference		TD-*04	TD-*01		TD-*28	TD-*23			TD-*04			
U	Multivariable	U-*01	U-*01	U-*01	U-*21	U-*29	U-*24		U-*16		U-*16		U-*16
V	Vibration, machine analysis	V-*01	V-*01	V-*01	V-*22	V-*30	V-*25		V-*17		V-*17		V-*17
W	Weight, force		W-*01			W-*31					W-*18		W-*18
WD	Weight difference		WD-*02			WD-*32					WD-*19		WD-*19
WF	Weight ratio	W-*01	WF-*03	W-*01	W-*23	WF-*33	W-*26		W-*18		WF-*20		WF-*20
WK	Weight loss (gain)		WK-*04			WK-*34					WK-*21		WK-*21
WQ	Weight total		WQ-*05			WQ-*35					WQ-*22		WQ-*22
X	Unclassified	X-*01	X-*01	X-*01	X-*24	X-*36	X-*27		X-*19		X-*23		X-*23
Y	Event, state, presence	Y-*01	Y-*01	Y-*01	Y-*25	Y-*37	Y-*28		Y-*20		Y-*24		Y-*24
Z	Position, dimension		Z-*01	Z-*01		Z-*38	Z-*29				Z-*25		Z-*25
ZX	Position, X-axis		ZX-*02	ZX-*01		ZX-*39	ZX-*30				ZX-*26		ZX-*26
ZY	Position, Y-axis		ZY-*03	ZY-*01		ZY-*40	ZY-*31				ZY-*27		ZY-*27
ZZ	Position, Z-axis	Z-*01	ZZ-*04	ZZ-*01	Z-*26	ZZ-*41	ZZ-*32		Z-*21		ZZ-*28		ZZ-*28
ZD	Gauge deviation		ZD-*01	ZD-*01		ZD-*42	ZD-*33				ZD-*29		ZD-*29
ZDX	Gauge X-axis deviation		ZDX-*02	ZDX-*01		ZDX-*43	ZDX-*34				ZDX-*30		ZDX-*30
ZDY	Gauge Y-axis deviation		ZDY-*03	ZDY-*01		ZDY-*44	ZDY-*35				ZDY-*31		ZDY-*31
ZDZ	Gauge Z-axis deviation		ZDZ-*04	ZDZ-*01		ZDZ-*45	ZDZ-*36				ZDZ-*32		ZDZ-*32

See statement of permission on page 4.

Note (1): Assignment shown is one of many possibilities.

© 2003 by Béla Lipták

TABLE 1.1e

Allowable Readout/Passive Function Identification Letter Combinations

First Letters	Measured/Initiating Variable	A(1)						B	E	G	I	L	N	O	P	Q	R	W	X
		Absolute Alarms			Deviation Alarms			User's Choice	Sensor, Primary Element	Gauge, Glass (2)	Indicate	Light	User's Choice	Orifice Restrict	Point (Test Conn.)	Integrate Totalize	Record	Well	Unclassified
		H	M	L	D	DH	DL												
A	Analysis	AAH	AAM	AAL	AAD	AADH	AADL		AE	N/A	AI			N/A	AP	N/A	AR	N/A	
B	Burner, combustion	BAH	BAM	BAL	BAD	BADH	BADL		BE	BG	BI	BL		N/A	N/A	N/A	BR	N/A	
C	User's choice	CAH	CAM	CAL	CAD	CADH	CADL		CE	CG	CI	CL					CR		
D	User's choice	DAH	DAM	DAL	DAD	DADH	DADL		DE	DG	DI	DL					DR		
E	Voltage	EAH	EAM	EAL	EAD	EADL	EADL		EE	EG	EI	EL		N/A	EP	N/A	ER	N/A	
F	Flow, flow rate	FAH	FAM	FAL	FAD	FADH	FADL		FE	FG	FI	FL		FO	FP	FQ	FR	N/A	
FF	Flow ratio	FFAH	FFAM	FFAL	FFAD	FFADH	FFADL		FE	N/A	FFI	N/A		N/A	N/A	N/A	FFR	N/A	
FQ	Flow total	FQAH	FQAM	FQAL	FQAD	FQADH	FQADL		N/A	N/A	FQI	N/A		N/A	N/A	N/A	FQR	N/A	
G	User's choice	GAH	GAM	GAL	EAD	GADH	GADL				GI						GR		
H	Hand	N/A	N/A	N/A	N/A	N/A	N/A		N/A	N/A	HI	N/A		N/A	N/A	N/A	HR	N/A	
I	Current	IAH	IAH	IAL	IAD	IADH	IADL		IE	N/A	II	IL		N/A	IP	N/A	IR	N/A	
J	Power	JAH	JAM	JAL	JAD	JADH	JADL		JE	N/A	JI	JL		N/A	JP	JQ	JR	N/A	
K	Time	N/A	N/A	N/A	N/A	N/A	N/A		N/A	N/A	KI	KL		N/A	N/A	KQ	KR	N/A	
L	Level	LAH	LAM	LAL	LAD	LADH	LADL		LE	LG	LI	LL		N/A	LP	N/A	LR	N/A	
M	User's choice	MAH	MAM	MAL	MAD	MADH	MADL				MI						MR		
N	User's choice	NAH	NAM	NAL	NAD	NADH	NADL				NI						NR		
O	User's choice	OAH	OAM	OAL	OAD	OADH	OADL				OI						OR		
P	Pressure	PAH	PAM	PAL	PAD	PADH	PADL		PE	PG	PI	PL		N/A	PP	N/A	PR	N/A	
PD	Pressure differential	PDAH	PDAM	PDAL	PDAD	PDADH	PDADL		PDE	PDG	PDI	PDL		N/A	PDP	N/A	PDR	N/A	
PF	Pressure ratio	PFAH	PFAM	PFAL	PFAD	PFADH	PFADL		N/A		PFI	N/A		N/A	N/A	N/A	PFR	N/A	
PK	Pressure schedule	PKAH	PKAM	PKAL	PKAD	PKADH	PKADL		N/A		PKI	PKL		N/A	N/A	N/A	PKR	N/A	
Q	Quantity	QAH	QAM	QAL	QAD	QADH	QADL		N/A		QI	QL		N/A	N/A	N/A	QR	N/A	
R	Radiation	RAH	RAM	RAL	RAD	RADH	RADL		RE	RG	RI	RL		N/A	RP	RQ	RR	N/A	
S	Speed	SAH	SAM	SAL	SAD	SADH	SADL		SE	SG	SI	N/A		N/A	SP	N/A	SR	N/A	
T	Temperature	TAH	TAM	TAL	TAD	TADH	TADL		TE	TG	TI	TL		N/A	TP	N/A	TR	TW	
TD	Temperature differential	TDAH	TDAM	TDAL	TDAD	TDADH	TDADL		TE	TDG	TDI	TDL		N/A	N/A	N/A	TDR	N/A	

(Continued)

© 2003 by Béla Lipták

TABLE 1.1e Continued

Allowable Readout/Passive Function Identification Letter Combinations

First Letters	Measured/Initiating Variable	A(1)						B	E	G	I	L	N	O	P	Q	R	W	X
		Absolute Alarms			Deviation Alarms			User's Choice	Sensor, Primary Element	Gauge, Glass (2)	Indicate	Light	User's Choice	Orifice Restrict	Point (Test Conn.)	Integrate Totalize	Record	Well	Unclassified
		H	M	L	D	DH	DL												
TF	Temperature ratio	TFAH	TFAM	TFAL	TFAD	TFADH	TFADL		N/A	N/A	TFI	N/A		N/A	N/A	N/A	TFR	N/A	
TK	Temperature schedule	TKAH	TKAM	TKAL	TKAD	TKADH	TKADL		N/A	N/A	TKI	TKL		N/A	N/A	N/A	TKR	N/A	
U	Multivariable	N/A	N/A	N/A	N/A	N/A	N/A		N/A	N/A	N/A	N/A		N/A	N/A	N/A	N/A	N/A	
V	Vibration, machine analysis	VAH	N/A	VAL	VAD	VADH	VADL		VE	VG	VI	N/A		N/A	VP	N/A	VR	N/A	
W	Weight, force	WAH	WAM	WAL	WAD	WAD	WADL		WE	N/A	WI	WL		N/A	N/A	N/A	WR	N/A	
WD	Weight difference	WDAH	WDAM	WDAL	WDAD	WDAD	WDADL		WE	N/A	WDI	WDL		N/A	N/A	N/A	WDR	N/A	
WF	Weight ratio	WFAH	WFAM	WFAL	WFAD	WFAD	WFADL		WE	N/A	WFI	N/A		N/A	N/A	N/A	WFR	N/A	
WK	Weight loss (gain)	WKAH	WKAM	WKAL	WKAD	WKAD	WKADL		N/A	N/A	WKI	WKL		N/A	N/A	N/A	WKR	N/A	
WQ	Weight total	WQAH	WQAM	WQAL	WQAD	WQAD	WQADL		N/A	N/A	WQI	WQL		N/A	N/A	N/A	WQR	N/A	
X	Unclassified	XAH	XAM	XAL	XAD	XAD	XADL		XE	XG	XI	XL		N/A	N/A	N/A	XR	N/A	
Y	Event, state, presence	YSAH	N/A	YAL	N/A	N/A	N/A		N/A	YG	YI	YL		N/A	N/A	N/A	YR	N/A	
Z	Position, dimension	ZAH	ZAM	ZAL	ZAD	ZADH	ZADL		ZE	ZG	ZI	ZL		N/A	N/A	N/A	ZR	N/A	
ZX	Position, X-axis	ZXAH	ZXAM	ZXAL	ZXAD	ZXADH	ZXADL		ZXE	ZXG	ZXI	ZXL		N/A	N/A	N/A	ZXR	N/A	
ZY	Position, Y-axis	ZYAH	ZYAM	ZYAL	ZYAD	ZYADH	ZYADL		ZYE	ZYG	ZYI	ZYL		N/A	N/A	N/A	ZYR	N/A	
ZZ	Position, Z-axis	ZZAH	ZZAM	ZZAL	ZZAD	ZZADH	ZZADL		ZZE	ZZG	ZZI	ZZL		N/A	N/A	N/A	ZZR	N/A	
ZD	Gauge deviation	ZDAH	ZDAM	ZDAL	ZDAD	ZDADH	ZDADL		ZDE	ZDG	ZDI	N/A		N/A	N/A	N/A	ZDR	N/A	
ZDX	Gauge X-axis deviation	ZDXAH	ZDXAM	ZDXAL	ZDXAD	ZDXADH	ZDXADL		ZDXE	ZDXG	ZDXI	N/A		N/A	N/A	N/A	ZDXR	N/A	
ZDY	Gauge Y-axis deviation	ZDYAH	ZDYAM	ZDYAL	ZDYAD	ZDYADH	ZDYADL		ZDYE	ZDYG	ZDYI	N/A		N/A	N/A	N/A	ZDYR	N/A	
ZDZ	Gauge Z-axis deviation	ZDZAH	ZDZAM	ZDZAL	ZDZAD	ZDZADH	ZDZADL		ZDZE	ZDZG	ZDZI	N/A		N/A	N/A	N/A	ZDZR	N/A	

See statement of permission on page 4.

N/A = not allowed.

Note (1): Alarm combinations are given with Function Modifiers for deviation from set point and absolute values. Adding [H] or [L] forms low–low and high–high alarm Functional Identifications.

Note (2): Readout/Passive Function [G] (glass, gauge) is shown for local direct connected devices, such as flow sight glasses, level glasses, pressure gauges, and thermometers, and also for weigh scales and position indicators. These devices provide a simple view of a process condition. The Readout/Passive Function [I] (indicate) may continue to be used in facilities where it is currently used.

© 2003 by Béla Lipták

TABLE 1.1f

Allowable Output/Active Function Identification Letter Combinations

First Letters	Measured/ Initiating Variable	C				K	S			T			U	V	X	Y	Z
		Controller				Control Station	Switch			Transmitter			Multi-function	Valve Damper Louver	Unclassified	Compute Convert Relay	Actuator Drive
		C(4)(5)	IC(3)	RC(3)	CV(6)		H	M	L	T	IT	RT					
A	Analysis	AC	AIC	ARC	N/A	AK	ASH	ASM	ASL	AT	AIT	ART	AU	AV	AX	AY	
B	Burner, combustion	BC	BIC	BRC	N/A	BK	BSH	BSM	BSL	BT	BIT	BRT	BU	BV	BX	BY	BZ
C	User's choice	CC	CIC	CRC		CK	CSH	CSM	CSL	CT	CIT	CRT	CU	CV	CX	CY	
D	User's choice	DC	DIC	DRC		DK	DSH	DSM	DSL	DT	DIT	DRT	DU	DV	DX	DY	
E	Voltage	EC	EIC	ERC	N/A	EK	ESH	ESM	ESL	ET	EIT	ERT	EU	N/A	EX	EY	EZ
F	Flow, flow rate	FC	FIC	FRC	FCV	FK	FSH	FSM	FSL	FT	FIT	FRT	FU	FV	FX	FY	
FF	Flow ratio	FFC	FFIC	FFRC	N/A	FFK	FFSH	FFSM	FFSL	N/A	N/A	N/A	N/A	N/A	FFX	FFY	
FQ	Flow total	FQC	FQIC	FQRC	FQCV	FQK	FQSH	FQSM	FQSL	FQT	FQIT	FQRT	N/A	FQV	FQX	FQY	
G	User's choice	GC	GIC	GRC		GK	GSH	GSM	GSL	GT	GIT	GRT	GU	GV	GX	GY	
H	Hand	HC	HIC	N/A	HCV	N/A	N/A	N/A	N/A	N/A	N/A	N/A	N/A	HV	HX	HY	
I	Current	IC	IIC	IRC	N/A	IK	ISH	ISM	ISL	IT	IIT	IRT	IU	N/A	IX	IY	IZ
J	Power	JC	JIC	JRC	N/A	JK	JSH	JSM	JSL	JT	JIT	JRT	JU	N/A	JX	JY	JZ
K	Time	KC	KIC	KRC	N/A	N/A	KSH	KSM	KSL	N/A	N/A	N/A	N/A	N/A	KX	KY	
L	Level	LC	LIC	LRC	LCV	LK	LSH	LSM	LSL	LT	LIT	LRT	LU	LV	LX	LY	
M	User's choice	MC	MIC	MRC		MK	MSH	MSM	MSL	MT	MIT	MRT	MU	MV	MX	MY	
N	User's choice	NC	NIC	NRC		NK	NSH	NSM	NSL	NT	NIT	ORT	NU	NV	NX	NY	
O	User's choice	OC	OIC	ORC		OK	OSH	OSM	OSL	OT	OIT	BRT	OU	OV	OX	OY	
P	Pressure	PC	PIC	PRC	PCV	PK	PSH	PSM	PSL	PT	PIT	PRT	PU	PV	PX	PY	
PD	Pressure differential	PDC	PDIC	PDRC	PDCV	PDK	PDSH	PDSM	PDSL	PDT	PDIT	PDRT	PDU	PDV	PDX	PDY	
PF	Pressure ratio	PFC	PFIC	PFRC	N/A	PFK	PFSH	PFSM	PFSL	N/A	N/A	N/A	N/A	N/A	PFX	PFY	
PK	Pressure schedule	PKC	PKIC	PKRC	N/A	PKADH	PKSH	PKSM	PKSL	N/A	N/A	N/A	N/A	N/A	PKX	PKY	
Q	Quantity	QC	QIC	QRC	QCV	QADH	QSH	QSM	QSL	QT	QIT	QRT	QU	N/A	QX	QY	
R	Radiation	RC	RIC	RRC	N/A	RADH	RSH	RSM	RSL	RT	RIT	RRT	RU	RV	RX	RY	
S	Speed	SC	SIC	SRC	SCV	SADH	SSH	SSM	SSL	ST	SIT	SRT	SU	SV	SX	SY	
T	Temperature	TC	TIC	TRC	TCV	TADH	TSH	TSM	TSL	TT	TIT	TRT	TU	TV	TX	TY	
TD	Temperature differential	TDC	TDIC	TDRC	N/A	TDADH	TDSH	TDSM	TDSL	TDT	TDIT	TDRT	TDU	TDV	TDX	TDY	

(Continued)

© 2003 by Béla Lipták

TABLE 1.1f Continued

Allowable Output/Active Function Identification Letter Combinations

First Letters	Measured/ Initiating Variable	C				K	S			T			U	V	X	Y	Z
		Controller				Control Station	Switch			Transmitter			Multi-function	Valve Damper Louver	Unclassified	Compute Convert Relay	Actuator Drive
		C(4)(5)	IC(3)	RC(3)	CV(6)		H	M	L	T	IT	RT					
TF	Temperature ratio	TFC	TFIC	TFRC	N/A	TFADH	TFSH	TFSM	TFSL	N/A	N/A	N/A	N/A	N/A	TFX	TFY	
TK	Temperature schedule	TKC	TKIC	TKRC	N/A	TKADH	TKSH	TKSM	TKSL	N/A	N/A	N/A	N/A	N/A	TKX	TKY	
U	Multivariable	UC	UIC	URC	N/A	N/A	USH	USM	USL	UT	N/A	N/A	N/A	N/A	UX	UY	
V	Vibration, machine analysis	VC	VIC	VRC	N/A	VADH	VSH	VSM	VSL	VT	VIT	VRT	N/A	N/A	VX	VY	
W	Weight, force	WC	WIC	WRC	WCV	WAD	WSH	WSM	WSL	WT	WIT	WRT	WU	WV	WX	WY	
WD	Weight difference	WDC	WDIC	WDRC	N/A	WDAD	WDSH	WDSM	WDSL	WDT	WDIT	WDRT	WDU	N/A	WDX	WDY	
WF	Weight ratio	WFC	WFIC	WFRC	N/A	WFAD	WFSH	WFSM	WFSL	N/A	N/A	N/A	N/A	N/A	WFX	WFY	
WK	Weight loss (gain)	WKC	WKIC	WKRC	N/A	WKAD	WKSH	WKSM	WKSL	N/A	N/A	N/A	N/A	N/A	WKX	WKY	
WQ	Weight total	WQC	WQIC	WQRC	N/A	WQAD	WQSH	WQSM	WQSL	N/A	N/A	N/A	N/A	N/A	WQX	WQY	
X	Unclassified	XC	XIC	XRC	N/A	XAD	XSH	XSM	XSL	XT	XIT	XRT	XU	XV	XX	XY	XZ
Y	Event, state, presence	YC	YIC	YRC	N/A	N/A	YSH	YSM	YSL	YT	YIT	YRT	YU	N/A	YX	YY	YZ
Z	Position, dimension	ZC	ZIC	ZRC	N/A	ZADH	ZSH	ZSM	ZSL	ZT	ZIT	ZRT	ZU	ZV	ZX	ZY	ZZ
ZX	Position, X-axis	ZXC	ZXIC	ZXRC	N/A	ZXADH	ZXSH	ZXSM	ZXSL	ZXT	ZXIT	ZXRT	N/A	ZXV	ZXX	ZXY	ZXZ
ZY	Position, Y-axis	ZYC	ZYIC	ZYRC	N/A	ZYADH	ZYSH	ZYSM	ZYSL	ZYT	ZYIT	ZYRT	N/A	ZYV	ZYX	ZYY	ZYZ
ZZ	Position, Z-axis	ZZC	ZZIC	ZZRC	N/A	ZZADH	ZZSH	ZZSM	ZZSL	ZZT	ZZIT	ZZRT	N/A	ZZV	ZZX	ZZY	ZZZ
ZD	Gauge deviation	ZDC	ZDIC	ZDRC	N/A	ZDADH	ZDSH	ZDSM	ZDSL	ZDT	ZDIT	ZDRT	N/A	ZDV	ZDX	ZDY	ZDZ
ZDX	Gauge X-axis deviation	ZDXC	ZDXIC	ZDXRC	N/A	ZDXADH	ZDXSH	ZDXSM	ZDXSL	ZDXT	ZDXIT	ZDXRT	N/A	ZDXV	ZDXX	ZDXY	ZDXZ
ZDY	Gauge Y-axis deviation	ZDYC	ZDYIC	ZDYRC	N/A	ZDYADH	ZDYSH	ZDYSM	ZDYSL	ZDYT	ZDYIT	ZDYRT	N/A	ZDYV	ZDYX	ZDYY	ZDYZ
ZDZ	Gauge Z-axis deviation	ZDZC	ZDZIC	ZDZRC	N/A	ZDZADH	ZDZSH	ZDZSM	ZDZSL	ZDZT	ZDZIT	ZDZRT	N/A	ZDZV	ZDZX	ZDZY	ZDZZ

See statement of permission on page 4.

N/A = not allowed.

Note (3): The combinations in the [IC] and [RC] columns indicate the order to be followed in forming the Functional Identification of a controller device or function that also provides indication or recording.

Note (4): The combinations in the [C] column do not have operator visible indication of measured variable, set point, or output signal, when used with discrete hardware single case instruments.

Note (5): The combinations in the [C] column may also be used for a controller function configured in a shared or distributed control system.

Note (6): The combinations in the [CV] column indicate the order to be followed in forming the Functional Identification for self-actuated control valves.

© 2003 by Béla Lipták

GRAPHIC SYMBOL SYSTEM GUIDELINES

See statement of permission on page 4.

General

The future revised ISA Standard S5.1 (now ANSI/ISA-5.01.01) establishes a graphic symbol system and functional identification for depicting instrument loop devices and functions, application software functions, and the interconnections between them that is logical, unique, and consistent in application with a minimum of exceptions, special uses, and requirements.

The graphic symbol system shall be used to depict instrumentation in text and in sketches and drawings. When used with identification letters and numbers as described in the subsection titled "Identification System Guidelines," it shall identify the functionality of each device and function shown.

The graphic symbol system provides methods for schematic loop diagramming, functional diagramming (see Section 1.2), and electrical schematic diagramming of any process or system that requires measurement, indication, control, modulation, or switching of variables.

Table 1.1g, Instrument Line Symbols, contains lines used to represent process connections and the measurement and control signals that connect instruments and functions to the process and to each other.

Tables 1.1h through 1.1k depict circles, squares, diamonds, hexagons, and lines used to represent the majority of hardware and software instruments and functions as follows:

Table 1.1h, Discrete (Individual) Devices and/or Functions, represents discrete hardware instruments and/or functions that are implemented in nonmicroprocessor-based systems similar or equal to single-case transmitters, controllers, indicators, or recorders.

Table 1.1i, Shared Continuous Devices and/or Functions, represents shared and/or distributed software analog instruments and/or functions that are implemented in microprocessor-based systems similar or equal to distributed control or programmable logic control systems.

Table 1.1j, Shared On–Off Devices and/or Functions, represents shared and/or distributed on–off software instruments and/or functions that are implemented in microprocessor-based control systems similar or equal to a distributed control or programmable logic control systems.

Table 1.1k, Computer Devices and/or Functions, represents shared and/or distributed on–off software instruments and/or functions that are implemented in a computer-based control system.

Figures 1.1l and 1.1m illustrate some practical but not standardized P&ID symbology for a fieldbus system (DeviceNet).

Table 1.1n, Primary Elements—Flow, describes various geometric shapes that represent primary measurement elements, such as orifice plates and thermocouples, that are located in the process piping.

Tables 1.1o through 1.1r, Final Control Elements, consist of various geometric shapes that represent final control elements, such as control valves and their actuators, that are located in the process piping:

Table 1.1o–Control Valve Bodies
Table 1.1p–Control Valve Actuators
Table 1.1q–Self-Actuated Devices (includes such self-actuated elements as pressure control valves and pressure relief valves)
Table 1.1r–Failure Position Indicators for Control Valves (indicates the position which the valve takes when/if the actuating power fails)

Table 1.1s, Electrical Schematic Symbols, represents electrical circuit elements.

Specific industrial application examples of the graphic symbol system will be found in a future series of S5.1 (now ANSI/ISA-5.01.01) Technical Reports. Sketches that are not all inclusive of acceptable methods of depicting instrumentation are included in the following text to illustrate the intent of the standard. However, the individual symbols and their meanings are to be mandatory in the future, imminent standard.

Guideline Modifications

These guidelines may be modified to suit the requirements of existing user-designed graphic symbols that are not included in this standard. When modified symbols are adopted, they shall be fully described and detailed in the user/owner's engineering or design standards.

Instrument Line Symbols

In Table 1.1g, symbols represent the following:

a) Instrument and device connections at process measurement points
b) Connections to instrument power supplies
c) Signals between measurement and control instruments and functions

Lines shall be

a) Fine in relation to process equipment and piping lines
b) As short as possible and consistent with clarity

Measurement and Control Devices and/or Function Symbols

See Table 1.1h, Discrete (Individual) Devices and/or Functions, in which symbols represent discrete devices that perform continuous and/or on–off functions that do not share control or display functions for the following:

© 2003 by Béla Lipták

TABLE 1.1g

Instrument Line Symbols (proposed for the next revision of ISA S5.1 [now ANSI/ISA-5.01.01] at the time of this writing)

No.	*Symbol*	*Application*
01		Instrument impulse line from process Instrument impulse line from equipment Analyzer sample line from process Functional instrument diagram signal lines
02	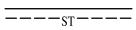	Heat (cool) traced instrument impulse line from process Heat (cool) traced instrument impulse line from equipment Heat (cool) traced analyzer sample line from process Type of tracing may be indicated as ET = electrical, RT = refrigerated, ST = steam, etc.
03		Generic instrument impulse line connected to process line Generic instrument impulse line connected to equipment
04	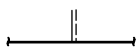	Heat (cool) traced generic instrument impulse line connected to process line Heat (cool) traced generic instrument impulse line connected to equipment Process line or equipment may or may not be traced
05	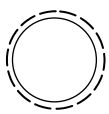	Heat (cool) traced instrument connected to process impulse line Instrument impulse line may or may not be traced
06		Flanged instrument connection to process line Flanged instrument connection to equipment
07		Threaded instrument connection to process line Threaded instrument connection to equipment
08		Socket welded instrument connection to process line Socket welded instrument connection to equipment
09		Welded instrument connection to process line Welded instrument connection to equipment *Practical industry tip:* Use symbol for both seal weld on threaded connection as well as butt weld on larger sizes
10		Instrument air supply Indicate supply pressure as required: AS-60 psig, AS-400 kPa, etc. IA (instrument air) or PA (plant air) may be used for AS Use as required
11		Instrument electric power supply Indicate voltage and type as required, e.g., ES-24 VDC, ES-120 VAC, etc. Use as required *Practical industry tip:* Add note if it is coming from UPS
12		Undefined signal Use for PFDs Use for discussions or diagrams where type of signal, pneumatic or electronic, is not of concern
13		Pneumatic signal
14		Electric signal Electronic signal Functional instrument diagram signal lines
15		Hydraulic signal
16		Filled thermal element capillary tube
17		Guided electromagnetic signal Fiber optic cable Guided sonic signal
18	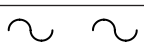	Unguided electromagnetic signal Unguided sonic signal Alternate radio communication link (see symbol 22)

© 2003 by Béla Lipták

TABLE 1.1g Continued

Instrument Line Symbols (proposed for the next revision of ISA S5.1 [now ANSI/ISA-5.01.01] at the time of this writing)

No.	*Symbol*	*Application*
19	—○——○—	Communication link or system bus, between devices and functions of a microprocessor-based system *Industry tip:* Use this for traditional DCS main data highway systems. System internal software link
20	—●——●—	Shared communication link or bus (not system bus) between two or more independent microprocessor-based systems Shared data link from/between field located microprocessor-based devices and/or functions *Industry tip:* Use for fieldbus field devices
21	–-○-–-○-–	Dedicated communications link or bus (not system bus) between two or more independent microprocessor-based systems Dedicated data link from a field located microprocessor-based device and/or function
22	⟋ ⟋	Dedicated radio communications link (not system bus) between radio transmitting and receiving devices and/or systems Unguided radio signal Alternate unguided electromagnetic signal (see symbol 18)
23	—◉——◉—	Mechanical link or connection
24	▭	Signal connector Drawing-to-drawing signal connector Internal signal connector used to avoid long signal lines
25	▭▷	Signal connector Internal signal connector used to avoid long signal lines Drawing-to-drawing signal connector

See statement of permission on page 4.

TABLE 1.1h

Discrete (Individual) Devices and/or Functions (proposed for the next revision of ISA S5.1 [now ANSI/ISA-5.01.01] at the time of this writing)

No.	*Symbol*	*Location and Accessibility*
01	○	Field or locally mounted Not panel or cabinet mounted Normally accessible to an operator
02	○	Central or main control room Front of main panel mounted Normally accessible to an operator
03	○	Central or main control room Rear of main panel mounted Not normally accessible to an operator
04	○	Secondary or local control room Field or local control panel Front of secondary or local panel mounted Normally accessible to an operator
05	○	Secondary or local control room Field or local control panel Rear of secondary or local panel or cabinet mounted Not normally accessible to an operator
06	□	Signal processor identifier located in upper right or left quadrant of symbols above Signal processor identifier attached to symbols where affected signals are connected

See statement of permission on page 4.

a) Measurement (transmitters, primary elements)
b) Indication (indicators, annunciators)
c) Control (controllers, control valves, switches, solenoids)

Limited operator accessibility (setpoint changes, control mode transfers, etc.) and unlimited engineer or technician accessibility through location and enclosure methods are shown.

Table 1.1i covers analog, digital, and/or discrete shared control devices and/or functions for continuous control, indication, calculation, and so forth that are microprocessor based and configurable. They communicate with each other and share control or display functions in applications such as distributed control and programmable logic systems.

Limited operator accessibility (setpoint changes, control mode transfers, and so forth) and unlimited engineer accessibility is through local or wide area communications networks, keyboards, and video displays as shown.

Table 1.1j deals with analog, digital, and discrete control devices and functions for on–off or binary control, indication, calculation, and so forth that are microprocessor based and configurable. They communicate with each other and share control or display in distributed control and programmable logic systems.

Limited operator accessibility (setpoint changes, control mode transfers, and so on) and unlimited engineer accessibility is through local or wide area communications networks, keyboards, and video displays as shown.

The devices and functions in Table 1.1k include process plant computer-implemented regulatory and/or advanced control analog/digital/discrete (individual) control and indication functions that are mainframe computer or minicomputer based.

© 2003 by Béla Lipták

TABLE 1.1i

Shared Continuous Devices and/or Functions (proposed for the next revision of ISA S5.1 [now ANSI/ISA-5.01.01] at the time of this writing)

No.	Symbol	Location and Accessibility
01		Dedicated single function device Field or locally mounted Not panel or cabinet mounted Normally accessible to an operator at device
02		Central or main console Visible on video display Normally accessible to an operator at console
03		Central or main console Not visible on video display Not normally accessible to an operator at console
04	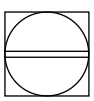	Secondary or local console Field or local control panel Visible on video display Normally accessible to an operator at console
05		Secondary or local console Field or local control panel Not visible on video display Not normally accessible to an operator at console
06		Mathematical function located in upper right or left quadrant of symbols above Mathematical function attached to symbols where affected signals are connected

See statement of permission on page 4.

Limited operator accessibility (setpoint changes, control mode transfers, etc.), and unlimited engineer accessibility is through local or wide area communications networks, keyboards, and video displays as shown.

Fieldbus P&ID Examples: DeviceNet Figures 1.1l and 1.1m show the practical methods used by one EPCM company in establishing a P&ID detail and markup for a low-voltage motor control plus a VFD motor control implemented with DeviceNet as the fieldbus. It should be pointed out that these figures do not completely conform to the ISA S5.1 (now ANSI/ISA-5.01.01) proposed standard and are a compromise born of necessity.

In Table 1.1n, symbols are pictorial representations of primary flow elements that generate a measurement or signal equal to, or a signal proportional to, a fluid flow rate or total flow.

In Table 1.1o, valve body symbols, when combined with valve actuator symbols, shall be used to represent control valves and solenoid valves as follows:

Symbols 01 through 05 may be used as generic symbols to represent control and solenoid valve bodies.

The remaining symbols may be used when it is desired to more clearly indicate a specific valve body type.

TABLE 1.1j

Shared on–off devices and/or Functions (proposed for the next revision of ISA S5.1 [now ANSI/ISA-5.01.01] at the time of this writing)

No.	Symbol	Location and Accessibility
01		Field or locally mounted Not panel or cabinet mounted Normally accessible to an operator at device
02		Central or main console Visible on video display Normally accessible to an operator at console
03		Central or main console Not visible on video display Not normally accessible to an operator at console
04		Secondary or local console Field or local control panel Visible on video display Accessible to an operator at console
05		Secondary or local console Field or local control panel Not visible on video display Not normally accessible to an operator at console
06		Mathematical function located in upper right or left quadrant of symbols above Mathematical function attached to symbols where affected signals are connected

See statement of permission on page 4.

TABLE 1.1k

Computer Devices and/or Functions (proposed for the next revision of ISA S5.1 [now ANSI/ISA-5.01.01] at the time of this writing)

No.	Symbol	Location and Accessibility
01		Undefined location Undefined visibility Undefined accessibility
02		Central or main computer Visible on video display Normally accessible to an operator at console or computer terminal
03		Central or main computer Not visible on video display Not normally accessible to an operator at console or computer terminal
04		Secondary or local computer Visible on video display Normally accessible to an operator at console or computer terminal
05		Secondary or local computer Not visible on video display Not normally accessible to an operator at console or computer terminal

See statement of permission on page 4.

© 2003 by Béla Lipták

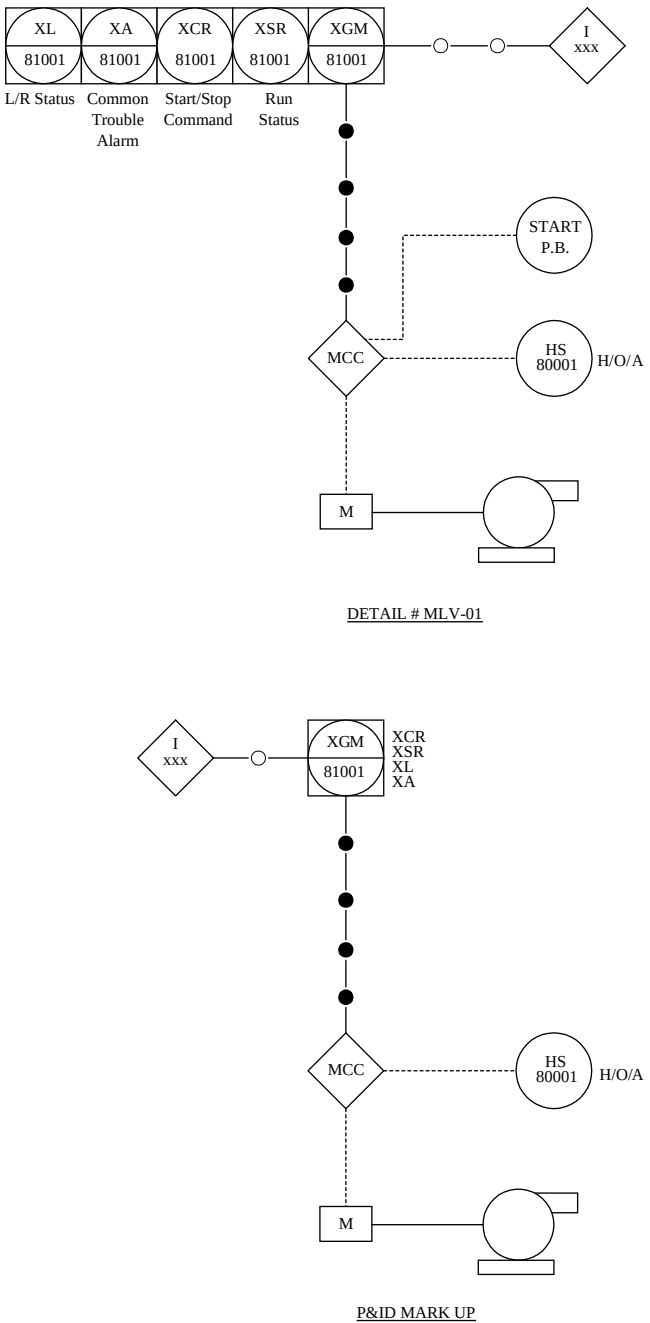

FIG. 1.1l
Low voltage motor control on DeviceNet (detail and P&ID mark up).

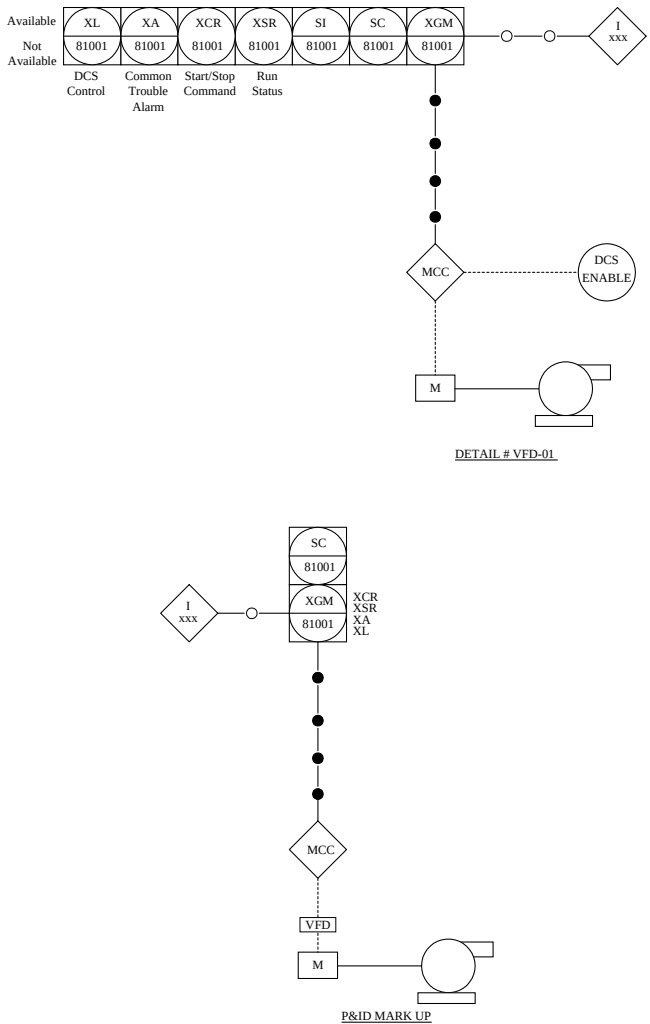

FIG. 1.1m
VFD motor control on DeviceNet (detail and P&ID mark up).

In Table 1.1s, contacts shall be shown in shelf condition. Rising switch actuator will cause contacts to switch.

Multipoint, Multifunction, and Multivariable Devices and Loops

Multipoint devices are indicators or recorders that may be single or multivariable and receive input signals from two or more primary elements or transmitters.

Multivariable devices are indicators, recorders, and controllers that receive input signals from two or more primary elements or transmitters and control one manipulated variable.

Multifunction devices are controllers or switches that receive input signals from two or more primary elements or transmitters and control two or more manipulated variables.

Single variable or multivariable multipoint indicators and recorders for two or three points shall be drawn with bubbles either

a) Tangent to each other in the same order, left to right, as the pen or pointer assignments:

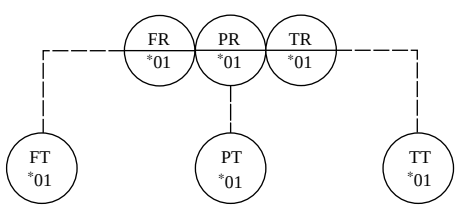

© 2003 by Béla Lipták

TABLE 1.1n

Primary Elements—Flow (proposed for the next revision of ISA S5.1 [now ANSI/ISA-5.01.01] at the time of this writing)

No.	*Symbol*	*Description*
01	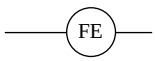	Generic flow element
02	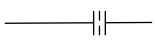	Standard orifice plate Restriction orifice
03	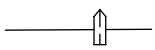	Orifice plate in quick change fitting
04	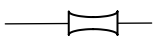	Generic venturi tube, flow nozzle, or flow tube Notation required if used for more than one type
05	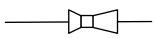	Venturi tube
06	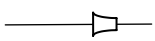	Flow nozzle
07	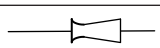	Flow tube
08	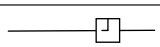	Standard pitot tube
09		Averaging pitot tube
10	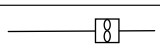	Turbine flowmeter Propeller flowmeter
11		Vortex shedding flowmeter
12	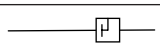	Target flowmeter
13	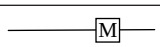	Magnetic flowmeter
14	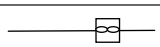	Positive displacement flowmeter
15	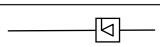	Cone meter Annular orifice meter
16	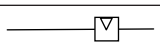	Wedge meter
17	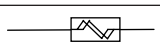	Coriolis flowmeter
18	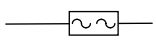	Sonic flowmeter Ultrasonic flowmeter
19	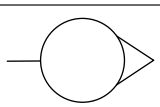	Variable area flowmeter
20	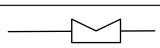	Open channel weir plate
21	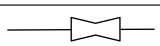	Open channel flume
22	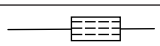	Flow straightening vanes Flow conditioning element

See statement of permission on page 4.

TABLE 1.1o

Final Control Elements—Control Valve Bodies (proposed for the next revision of ISA S5.1 [now ANSI/ISA-5.01.01] at the time of this writing)

No.	*Symbol*	*Description*
01		Generic two-way valve Straight globe control valve Two-way solenoid valve Gate valve
02		Generic two-way angle valve Angle globe control valve Angle solenoid valve
03	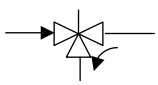	Generic three-way valve Three-way globe control valve Three-way solenoid valve Arrow indicates air failure or de-energized flow path
04	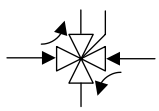	Generic four-way valve Four-way plug or ball control valve Four-way four ported on–off valve Arrows indicate air failure or de-energized flow paths
05	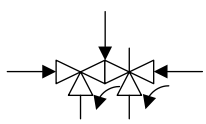	Four-way five ported on–off valve Arrows indicate air failure or de-energized flow paths
06	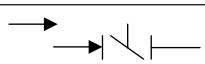	Butterfly valve
07	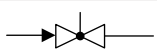	Two-way globe valve
08	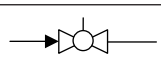	Ball valve
09	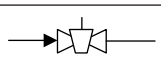	Plug valve
10	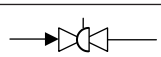	Eccentric rotary disc valve
11	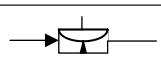	Diaphragm valve
12	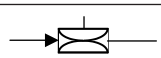	Pinch valve
13	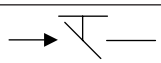	Generic damper Generic louver
14	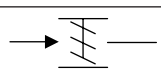	Parallel blade damper Parallel blade louver
15	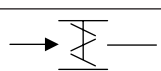	Opposed blade damper Opposed blade louver

See statement of permission on page 4.

© 2003 by Béla Lipták

TABLE 1.1p

Final Control Elements—Control Valve Actuators (proposed for the next revision of ISA S5.1 [now ANSI/ISA-5.01.01] at the time of this writing)

No.	Symbol	Description
01		Generic actuator Spring-opposed diaphragm linear actuator
02		Spring-diaphragm actuator with positioner
03		Pressure-balanced diaphragm linear actuator
04		Generic piston actuator May be linear or rotary
05		Piston actuator, single-acting, spring-opposed, with positioner
06	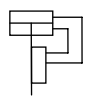	Piston actuator, double-acting, with positioner
07		Rotary motor-operated actuator May be electric, pneumatic, or hydraulic
08		Automatic reset solenoid actuator Nonlatching solenoid actuator Dual solenoids may be used
09		Manual or remote reset solenoid actuator Latching solenoid actuator
10		Manual and remote-reset solenoid actuator Latching solenoid actuator
11		Manual actuator Hand actuator
12		Spring-, weight-, or pilot-actuated relief or safety actuator
13		Actuator with side-mounted handwheel
14		Actuator with top-mounted handwheel
15		Electrohydraulic actuator May be linear or rotary action

See statement of permission on page 4.

TABLE 1.1q

Final Control Elements—Self-Actuated Devices (proposed for the next revision of ISA S5.1 [now ANSI/ISA-5.01.01] at the time of this writing)

No.	Symbol	Description
01	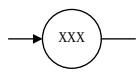	Automatic flow regulator XXX = FCV w/o indicator XXX = FICV w/integral indicator
02	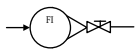	Variable area flowmeter with a manual regulating valve
03	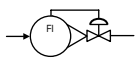	Constant flow regulator Manual setpoint variable area flowmeter
04	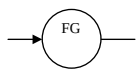	Flow sight glass Type shall be noted if more than one type used
05	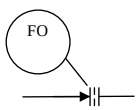	Generic flow restriction Single stage orifice plate as shown Note required for multistage or capillary tube types
06	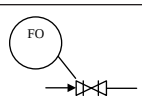	Restriction orifice hole drilled in valve plug Tag number may be omitted if valve is otherwise identified
07	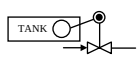	Level regulator Ball float and mechanical linkage
08	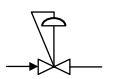	Backpressure regulator Internal pressure tap
09	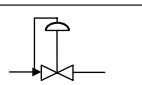	Backpressure regulator External pressure tap
10	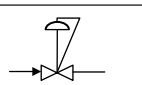	Pressure-reducing regulator Internal pressure tap
11	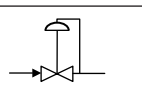	Pressure-reducing regulator External pressure tap
12	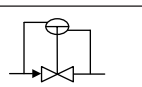	Differential-pressure regulator External pressure taps
13	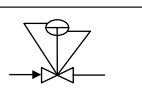	Differential-pressure regulator Internal pressure taps
14	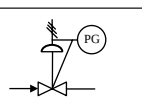	Pressure-reducing regulator w/integral outlet pressure relief and pressure gauge
15	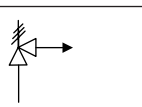	Generic pressure safety valve Pressure relief valve
16	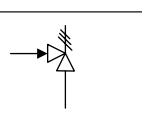	Generic vacuum safety valve Vacuum relief valve
17	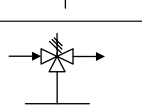	Generic pressure and vacuum relief valve Tank pressure and vacuum relief valve

© 2003 by Béla Lipták

TABLE 1.1q Continued

Final Control Elements—Self-Actuated Devices (proposed for the next revision of ISA S5.1 [now ANSI/ISA-5.01.01] at the time of this writing)

No.	*Symbol*	*Description*
18		Pressure safety element Pressure rupture disk Pressure relief
19		Pressure safety element Vacuum rupture disk Vacuum relief
20	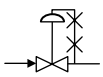	Temperature regulator Filled thermal system
21	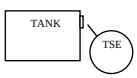	Thermal safety element Fusible plug or disk
22	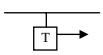	Generic moisture trap Steam trap Note required for other trap types
23	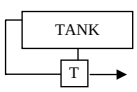	Moisture trap with equalizing line

See statement of permission on page 4.

TABLE 1.1r

Final Control Elements—Control Valve Air Failure Position Indication (proposed for the next revision of ISA S5.1 [now ANSI/ISA-5.01.01] at the time of this writing)

No.	*Method 1*	*Method 2*	*Definition*
01	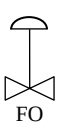	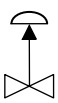	Fail to open position
02	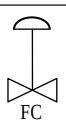	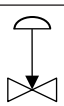	Fail to closed position
03	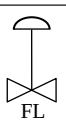	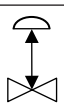	Fail locked in last position
04	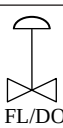	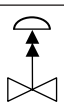	Fail at last position Drift open
05	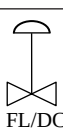	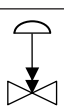	Fail at last position Drift closed

See statement of permission on page 4.

b) Separate from each other, with pen or pointer number indicated preferably in upper right or left quadrant and a note defining instrument or device indicated in preferably lower right or left quadrant:

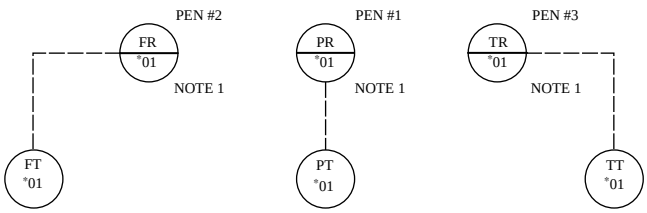

Note 1. Indicated pen in 3-pen Recoder

Multipoint indicators and recorders for four or more points may be drawn with bubbles separate from each other, with point number indicated by adding a suffix to the tag numbers as follows:

a) Single variable:

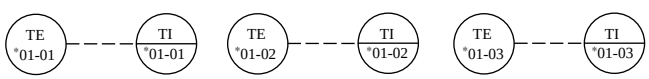

b) Multivariable:

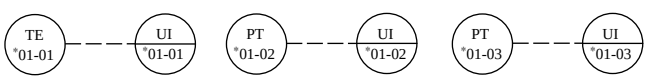

Multivariable controllers may be drawn with bubbles for each measured variable input and for the output to the final control element; measured variable indicators may be:

a) Shown:

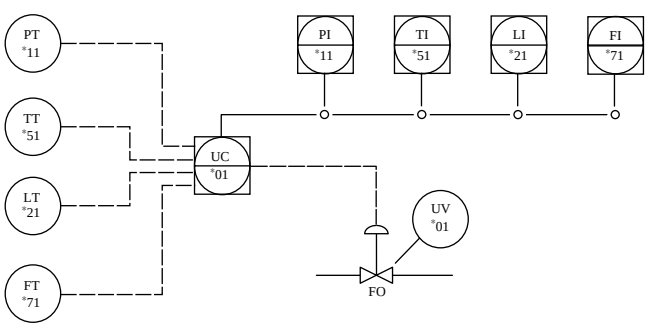

© 2003 by Béla Lipták

TABLE 1.1s

Electrical Schematic Symbols (proposed for the next revision of ISA S5.1 [now ANSI/ISA-5.01.01] at the time of this writing)

No.	*Symbol*	*Description*
01		Normally open, single-circuit pushbutton switch contact Single-pole, normally open (SPNO) pushbutton switch contact Combine with symbols 06 or 07 to form toggle or rotary-actuated switches
02		Normally closed, single-circuit pushbutton switch contact Single-pole, normally closed (SPNC) pushbutton switch contact Combine with symbols 06 or 07 to form toggle or rotary-actuated switches
03		Normally open, double-circuit pushbutton switch contact Double-pole, normally open (DPNO) pushbutton switch contact Combine with symbols 06 or 07 to form toggle or rotary-actuated switches
04		Normally closed/normally open double-circuit pushbutton switch contact Double-pole, normally open/closed (DPNO/NC) pushbutton switch contact Combine with symbols 06 or 07 to form toggle or rotary-actuated switches
05		Two-position toggle or rotary-maintained position pushbutton switch actuator Combine with symbols 01 through 05 to form single-pole, double-throw (SPDT) or multipole double-throw (DPDT, TPDT, etc.) switches
06		Three-position toggle or rotary-maintained position pushbutton switch actuator Combine with symbols 01 through 05 to form single-pole, triple-throw (SPTT) or multipole, triple-throw (DPTT, TPTT, etc.) switches
07		Single-pole, single-throw (SPST) normally open toggle switch Form A switch contact
08		Single-pole, single-throw (SPST) normally closed toggle switch Form B switch contact
09		Single-pole, double-throw (SPDT) normally closed/normally open toggle switch Form C switch contact
10		Pressure switch actuator
11	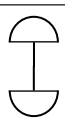	Differential-pressure switch actuator
12		Liquid level switch actuator
13		Temperature switch actuator
14		Flow switch actuator
15		Foot switch actuator
16		Relay coil
17		Normally open relay contact
18		Normally closed relay contact
19		Connection convention A: Left = not connected Right = connected
20	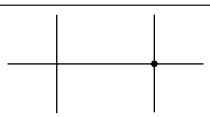	Connection convention B: Left = not connected Right = connected

© 2003 by Béla Lipták

b) Assumed:

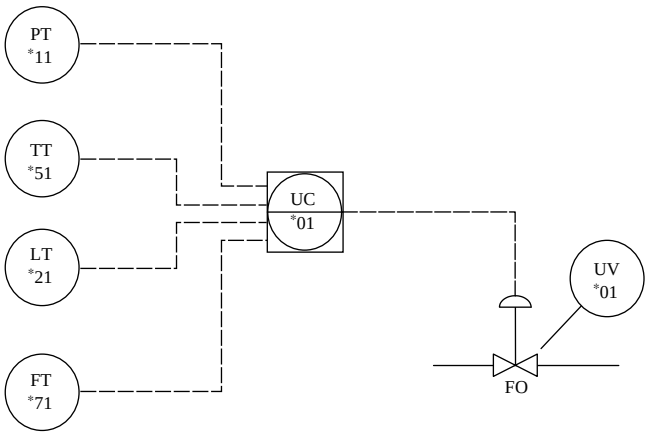

Multifunction controllers shall be drawn with bubbles for each measured variable input and output to final control elements; measured variable indicators may be:

a) Shown:

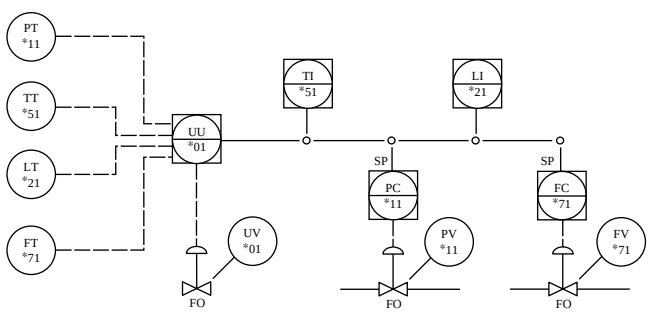

b) Assumed:

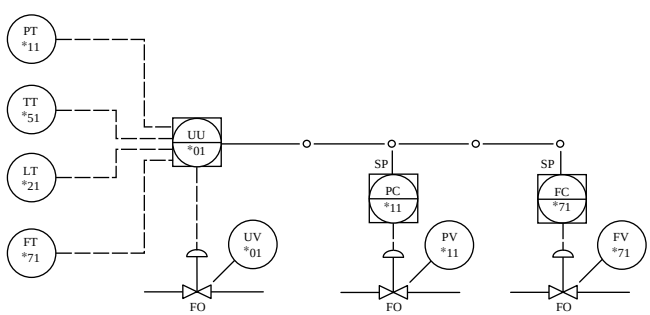

Fieldbus Devices, Loops, and Networks

Comments and Exceptions (Including Non-ISA Industrial Practice) Instrument and control systems staff working at engineering, procurement, and construction management (EPCM) companies had to improvise on P&ID symbols for fieldbus devices, loops, segments, and networks throughout the late 1990s and early 2000s. This has been the case while waiting for the draft standard work outlined in this section to be discussed and approved as the latest revision to ISA S5.1 (now ANSI/ISA-5.01.01). (For specific details on fieldbus technologies, please refer to later chapters and sections in this volume.)

Certain techniques and shortcuts used by several EPCM companies, and how they have handled fieldbus symbology, will be mentioned in this subsection. A few companies have generated their P&IDs using the proposed Instrument Line Symbol no. 20 (Table 1.1g) as the shared data links or FOUNDATION™ fieldbus (FF) segments between field located microprocessor-based devices as well as FF host systems. In this way, it is implicit that the devices connected by that symbol are fieldbus devices and do not need any further symbology or identification on the P&IDs. This symbol also has been used for other fieldbuses such as PROFIBUS PA, PROFIBUS DP, AS-i Bus, and DeviceNet (see Figures 1.1l and 1.1m).

Another symbol used by the EPCM companies for fieldbus has been the Instrument Line Symbol no. 19 (Table 1.1g), which is the current existing symbol (ANSI/ISA S5.1-1984[1992]) and normally the one used for data links and DCS data highways. This has been done occasionally when the EPCM company's client/owner had specific, custom P&ID symbology standards and was reluctant to change a worldwide standard to a new symbol such as no. 20. Once again, any field devices such as transmitters and control valves that are connected together by Symbol no. 19 are now known to be fieldbus-type devices. The disadvantage is that the P&IDs must be studied carefully to determine real communication link, DCS data highway, system bus, or internal software link applications from the fieldbus applications.

Another EPCM company used the conventional analog electronic signal (Symbol no. 14 in Table 1.1g) at the urging of its client but added the suffix "FB" to each fieldbus device bubble on the P&IDs. Once again, this was not a standardized approach, and it led to ambiguity and misunderstanding. It is highly recommended that the proposed draft revision Instrument Line Symbol no. 20 (which we hope will be approved by the time this volume is released) be used for all types of fieldbus segments and networks.

P&IDs: Practical Aspects and Practices in the EPC Industry

Piping and instrument diagrams (P&IDs) are the basic documents describing a plant from mechanical and control point of view. They are sometimes called mechanical flow diagrams (MFDs) by some EPC and operating companies. Process flowsheets/diagrams (PFDs) are used and generated by process design engineering in the very early stage of the front-end engineering phase and do not normally include ISA symbols except in the most elementary fashion. However, they are the starting point for P&ID development.

The P&ID life cycle extends through the feasibility study, project estimate, detailed engineering phase, construction phase, precommissioning, commissioning, and, finally, to exploitation of the plant. According to which phase the

© 2003 by Béla Lipták

project is in, the P&IDs show different level of details to suit various needs.

1) During the feasibility study, not all equipment and lines are shown; only the major ones appear, such as used to follow the path of authorizations, obtain of financing, and so on. At this stage, only major equipment is sized, such as to show environmental impact, and effluent systems are studied to comply with the information requested by various environmental authorities. Only major lines are shown, without sizing information. Very few instruments and control loops are shown, and then only in the most simplified manner.
2) During the project estimate, all equipment is shown, but without auxiliary services such as cooling water to machinery. The lines are sized, and their material and rating are shown. All control loops are shown, or at least all transmitters, local instruments, and control valves. All motor-operated valves and safety valves are shown and are sized if possible. Small-bore/diameter piping (<2 in) is not shown unless it is made of an exotic material.
3) Within the detailed engineering phase, the P&IDs are issued several times, incorporating information as it becomes available from vendors or as derived from calculations and finalization of choices. Normally, there are about three or four issues before the issue for construction. At that time, the P&IDs shall show all equipment and all lines including services to machinery, drains, and vents (as far as piping is concerned) and all instruments, control loops, and valves (as far as instrumentation is concerned).

Each line shall be sized, classified, and numbered, meaning that each line is identified with nominal diameter, piping class (which defines the material), rating (unless the piping class covers only one rating), corrosion allowance, and winterization. The control valves shall be shown with their true nominal diameter and flange rating along with block and bypass valves, handwheel, action on air failure, and possibly the pressure drop. If the valve is the angle type, the inlet and outlet shall be shown correctly. The transmitters shall be shown singularly, duplicated, or triplicated, with their pressure taps. If level bridles are used, they shall be shown with correct valving. The flow measurements shall show the correct type of primary element. Magnetic flowmeters that are required to run full should show the indication "low point."

If some devices (such as desuperheaters) require special precautions, such precautions shall be shown to prevent wrong piping design (e.g., minimum unobstructed straight length = X feet). The safety valves shall be shown with size and rating of input and output connections plus the set pressure. All vents, drains, silencers, and so on shall be shown. If many vents use common silencers, this shall be clearly indicated by means of drafting or notes. The control loops shall be shown in complete form. However, in the power industry, some boiler manufacturers show the transmitters (since they are supplied by them) and the control loops in several different documents (vendor package drawings) to be delivered to the DCS supplier or the EPC company responsible for DCS design. To prevent multiple repeats of the same information, some typical sketches should be prepared covering, for instance, the indications and commands related to an on–off motor-operated valve, an inching motor-operated valve, high-voltage motors, low-voltage motors, on–off pneumatic valves, and so forth. The typical sketches shall be numbered and referred to nearby each device on the P&ID to which it applies.

Although the P&ID symbols are normally in accordance with ISA standards, it is recommended that a P&ID symbol key sheet be prepared with a summary of all equipment and instrument symbols used to prevent any misunderstanding. The reader is referred to the previous subsection, "Inclusion of the New S5.1 Standard (now ANSI/ISA-5.01.01) in User/Owner Documents."

The tag numbering of the instruments shall be in accordance with ISA guidelines, standards, and recommended practices previously covered in this section, and all components of a loop shall have the same distinctive number so as to simplify maintenance and understanding of the process. In the case in which an instrument or loop is cancelled, its tag number shall not be used again to prevent the possibility of keeping the old process data that is no longer correct. The tag/loop cancellations must be carefully noted and retained in the instrument index, and especially in the computerized instrument database (IDB) that generates the index. For the same reason, if an instrument or a loop is moved to a different tapping point, it should be renamed—although this depends on different company standards/policies on this subject. In some cases, two pieces of equipment are used (e.g., two pumps, one spare to the other), which are named with the suffix A/B. Their relevant instruments are often tagged with the tag number suffixed with A/B. To avoid misinterpretations when two or three instruments are used in a redundant/voting configuration, it is suggested to attach suffixes to them using the letters X, Y, and Z.

Even though the P&IDs are not representative of the layout of the plant, it is recommended that the equipment be shown as it is to appear; e.g., a horizontal vessel shall be shown as horizontal and not vertical, and a boiler feed water pump with intermediate MP draft should be shown with the nozzles in correct sequence. A distillation column with different sections should be represented not as a constant one but to be roughly representative of the true situation. It is noted that the P&IDs are to be suitable for a take-off of the valves, reducers, branches, and instruments, but not for the take-off of piping and elbows.

The P&IDs depicting utility distribution or fire detection/fighting instead follow the plant plot plan and include some instruments as well.

It is important that all instruments appear on the P&ID and that none is overlooked. If some instruments are supplied

© 2003 by Béla Lipták

as an integral part of a machine (e.g., resistance temperature detectors in electric motor windings and vibration probes in a compressor or turbine), it is advisable that the manufacturer's P&ID be numbered with the same system as the project P&IDs, and always from the viewpoint of taking care of all signals that will be connected to a PLC or DCS. In fact, most EPC companies supply the proper compatible tags and loop numbers from the IDB to the vendor after the first vendor document/drawing review and subsequent return to the vendor.

During construction and precommissioning, the P&IDs are used to keep track of the installed piping and instruments. At the precommissioning stage, they are used to verify that the plant has been built according to the P&IDs issued for construction. This is called the *check against P&IDs*. Any discrepancy found during this check shall be resolved and the plant modified or, if acceptable, the P&IDs shall be marked up to prepare the "as-built" issue.

During commissioning, some modifications could be necessary to overcome operational problems that could arise. These modifications could involve additional drains and vents, control strategy changes, and so forth and need to be recorded on the P&IDs to be introduced in the "as-built" issue.

During the life cycle of the plant, the P&IDs can be modified because of different products required, different feedstock, or additional treatment systems. This is even more evident in batch processes that can be modified to obtain different products. Sometimes, it is a concern that the revamping or debottlenecking of the original plant could be so extensive that the original P&IDs need to be redrawn. In this case, it is possible that starting from existing P&IDs could cause the introduction of several errors because they have not been updated.

The P&IDs have also a commercial impact on a project in that a payment is tied to their first issue. In defining the commercial aspects, one should determine to what extent the first issue of the P&IDs shall be complete so as to avoid conflicts between the owner and the supplier. A possible request could be as follows:

- All lines sized, classified, and numbered
- All instruments tagged
- All set values of safety valves shown

To go even farther, the size of control valves could be shown.

The P&IDs are the first step in ensuring the safety of maintenance personnel, which today is based on widely used outsourcing. For example, people should immediately be warned about the risks involved in the case of piping that has a high rating, is made with an exotic material, has high corrosion allowance, has a thick insulation, or belongs to a system with high set values for the safety valves.

© 2003 by Béla Lipták

1.2 Functional Diagrams and Function Symbols*

J. E. JAMISON (2003)

The purpose of this section is to help the reader establish a uniform means of depicting and identifying mainly digital-based application software functions used for measurement, monitoring, and control. It is done by presenting a designation system including graphic symbols and identification codes as well as functional diagramming techniques that were formerly known as the Scientific Apparatus Manufacturers' Association (SAMA) system.

It must be noted that a significant part of this section has been extracted from the revision work of the ISA SP5.1 subcommittee, and much of it has been based on draft working documents being utilized at the time of this writing, documents with which one of the authors has been actively involved. Other portions of this section are based on the author's experience in the industry and are not any part of the SP5.1 subcommittee proposed forthcoming revision.

A disclaimer to any future ISA standards documents is hereby stated: The reader is cautioned that the draft ISA document that provided much of the information in this section has not been approved as of the time of this writing. It cannot be presumed to reflect the position of ISA or any other committee, society, or group.

The intent is to pass along to the reader the best and latest thinking on this subject at this point in time.

ISA FUNCTIONAL DIAGRAMMING (EX-SAMA)*

Instrument and Control Systems Functional Diagramming

Symbol tables are given for use in preparing instrument and control loop functional diagrams, which are not normally shown on process flow diagrams (PFDs) and piping and instrument diagrams (P&IDs). They are used to depict monitoring and control loops in functional instrument diagrams, functional logic diagrams, application software diagrams, sketches, and text. They shall be prepared from the following:

a) Instrument line symbols
b) Instrument functional diagramming symbols
c) Mathematical function block symbols

Equivalent P&ID Loop, Functional Instrument and Electrical Diagrams

See statement of permission in the footnote below.

a) P&ID loop schematic:

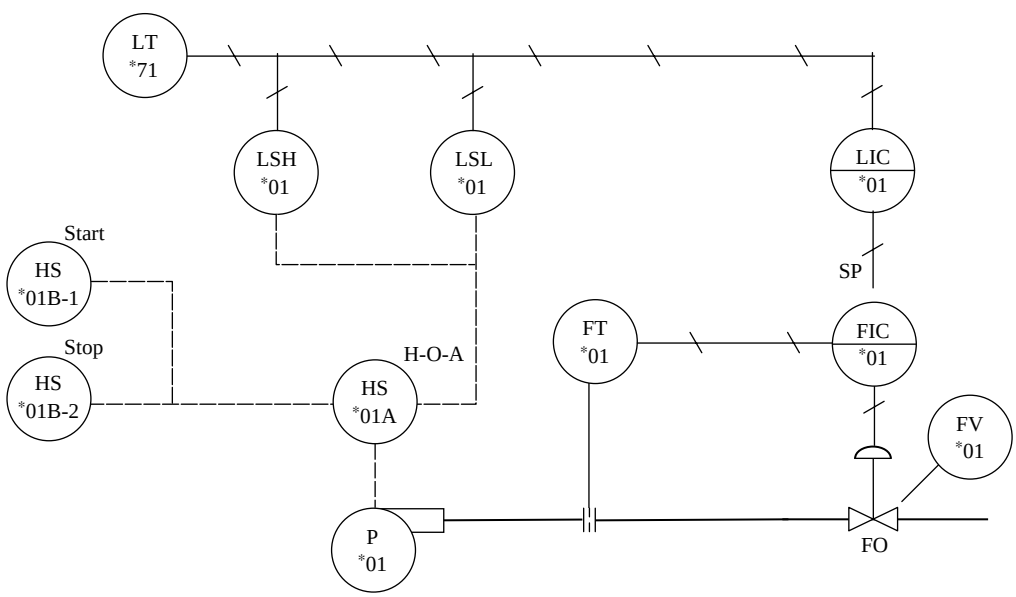

* Used with permission of the Instrumentation, Systems and Automation Society.

© 2003 by Béla Lipták

b) Functional instrument diagram:

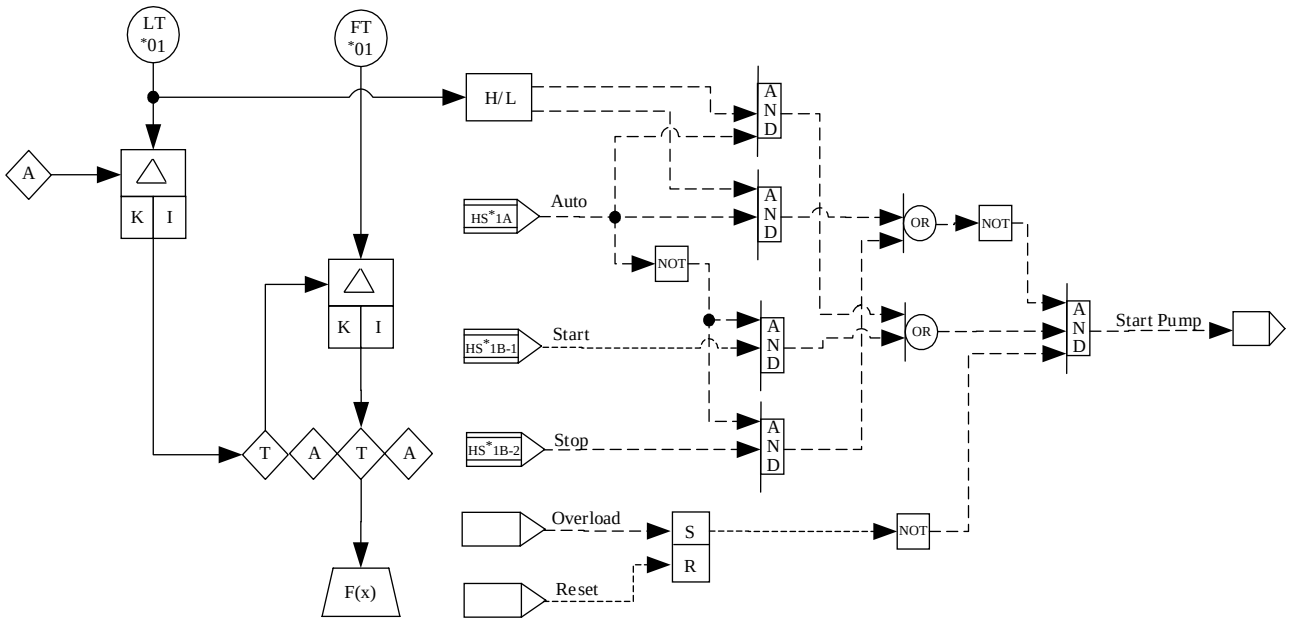

c) Electrical schematic diagram:

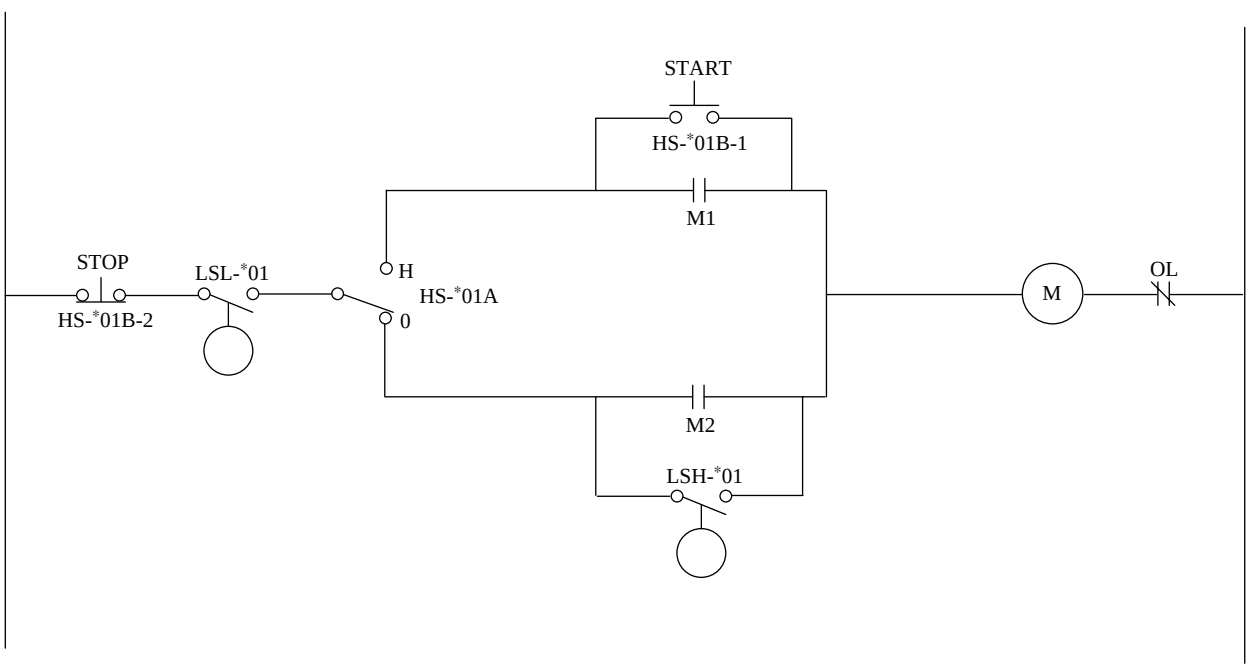

Note: There is no equivalent electrical schematic for the process control instrumentation.

Functional Diagramming Symbol Tables*

The symbols used in Table 1.2a are not normally used on P&IDs but are used to diagram control systems at the hardware and function level for configuration and other purposes.

The symbols in Table 1.2b are never used in P&IDs and are used to help document and diagram logic control designs and narratives. The present standard ISA S5.2 (ANSI/ISA-S5.2–1976 [R1992]) is now being revised and rolled into the new ANSI/ISA-5.01.01 standard as proposed in the current (as of this writing) Draft 4. Symbols, truth tables, definitions, and graphs used in this section are in accordance with Draft 4 and are very different from S5.2. They are given here to illustrate the latest thinking in this area, including expanded

*The symbols have been extracted by ISA, with permission, from Scientific Apparatus Manufacturers' Association SAMA Standard PMC 22.1–1981, Functional Diagramming of Instrument and Control Systems, which is no longer supported by SAMA.

© 2003 by Béla Lipták

TABLE 1.2a

Functional Diagramming Symbols—Instrument and Mathematical Functions (proposed for the next revision of ISA S5.1 [now ANSI/ISA-5.01.01] at the time of this writing)

No.	*Symbol*	*Description*
01		Measuring device Input device Readout device Output device Symbols from Tables 1.1h through 1.1k may be used
02		Automatic controller Single-mode controller Discrete device driver Insert function symbols, as required to define controller algorithm, from Table 1.2c Use for vertical diagramming
03		Automatic controller Two-mode controller Insert function symbols, as required to define controller algorithm, from Table 1.2c Use for vertical diagramming
04	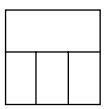	Automatic controller Three-mode controller Insert function symbols, as required to define controller algorithm, from Table 1.2c Use for vertical diagramming
05	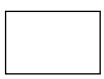	Automatic signal processor Insert function symbol from Table 1.2c Use for vertical diagramming
06	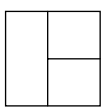	Automatic controller Two-mode controller Insert function symbols, as required to define controller algorithm, from Table 1.2c Use for horizontal diagramming
07	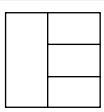	Automatic controller Two-mode controller Insert function symbols, as required to define controller algorithm, from Table 1.2c Use for horizontal diagramming
08		Automatic signal processor Insert function symbol from Table 1.2c Use for horizontal diagramming May be rotated 90°
09	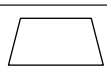	Final control element Control valve Insert function symbol identifier from Table 1.2c (no. 14)
10	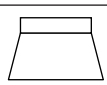	Final control element with positioner Control valve with positioner Insert function symbol identifier from Table 1.2c (no.14)
11		Manual signal processor (*) = A, adjustable signal generator (*) = T, signal transfer
12	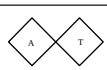	Manual auto station

See statement of permission on page 31.

timing functions. Application information and examples on the use of the binary symbols are given in Section 1.12, Binary Logic Diagrams, and they use the current standard ANSI/ISA-S5.2–1976 (R1992).

Binary logic switching and memory functions are used in analog or sequential control schemes. In truth tables and graphs, logic one (1) is *true* and logic zero (0) is *false*.

© 2003 by Béla Lipták

TABLE 1.2b

Instrument and Control System Functional Diagramming Symbols—Binary Logic, Memory, and Time Functions (proposed for the next revision of ISA S5.1 [now ANSI/ISA-5.01.01] at the time of this writing)

No.	*Symbol/Truth Table*	*Definition/Graph*

01

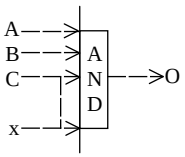

AND gate.

Output is true only if all inputs are true.

	A	B	C	x	O
1	0	0	0	0	0
2	1	0	0	0	0
3	0	1	0	0	0
4	0	0	1	0	0
5	0	0	0	1	0
6	1	1	0	0	0
7	1	0	1	0	0
8	1	0	0	1	0
9	0	1	1	0	0
10	0	1	0	1	0
11	0	0	1	1	0
12	1	1	1	0	0
13	1	1	0	1	0
14	1	0	1	1	0
15	0	1	1	1	0
16	1	1	1	1	1

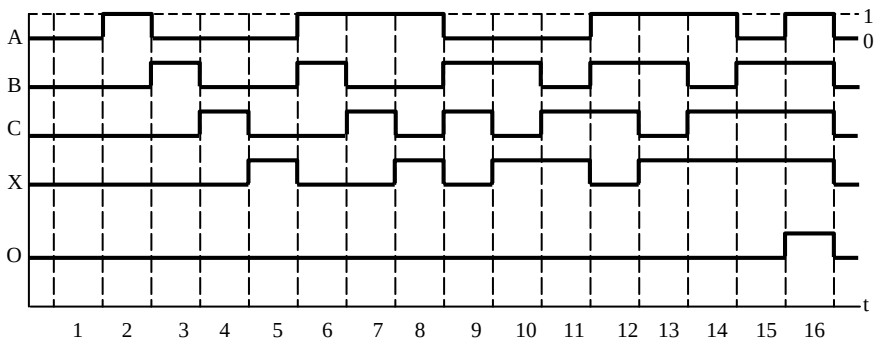

02

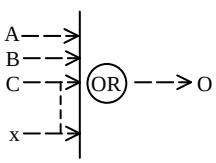

OR gate.

Output is true if any input true.

	A	B	C	x	O
1	0	0	0	0	0
2	1	0	0	0	1
3	0	1	0	0	1
4	0	0	1	0	1
5	0	0	0	1	1
6	1	1	0	0	1
7	1	0	1	0	1
8	1	0	0	1	1
9	0	1	1	0	1
10	0	1	0	1	1
11	0	0	1	1	1
12	1	1	1	0	1
13	1	1	0	1	1
14	1	0	1	1	1
15	0	1	1	1	1
16	1	1	1	1	1

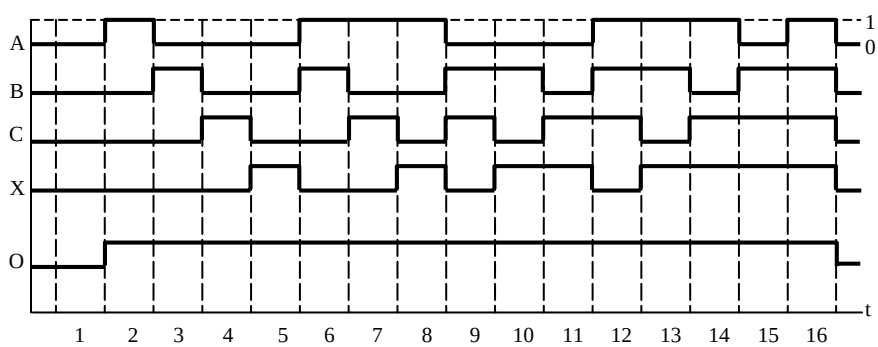

© 2003 by Béla Lipták

TABLE 1.2b Continued

Instrument and Control System Functional Diagramming Symbols—Binary Logic, Memory, and Time Functions (proposed for the next revision of ISA S5.1 [now ANSI/ISA-5.01.01] at the time of this writing)

No.	*Symbol/Truth Table*	*Definition/Graph*

03

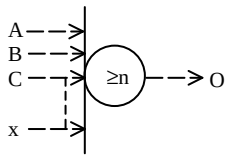

Qualified OR gate with greater than or equal to qualifications.
Output equals "1" if number of inputs equal to "1" are greater than or equal to "n" inputs.
Truth table and graph are for "n" equals 2.

	A	B	C	x	O
1	0	0	0	0	0
2	1	0	0	0	0
3	0	1	0	0	0
4	0	0	1	0	0
5	0	0	0	1	0
6	1	1	0	0	1
7	1	0	1	0	1
8	1	0	0	1	1
9	0	1	1	0	1
10	0	1	0	1	1
11	0	0	1	1	1
12	1	1	1	0	1
13	1	1	0	1	1
14	1	0	1	1	1
15	0	1	1	1	1
16	1	1	1	1	1

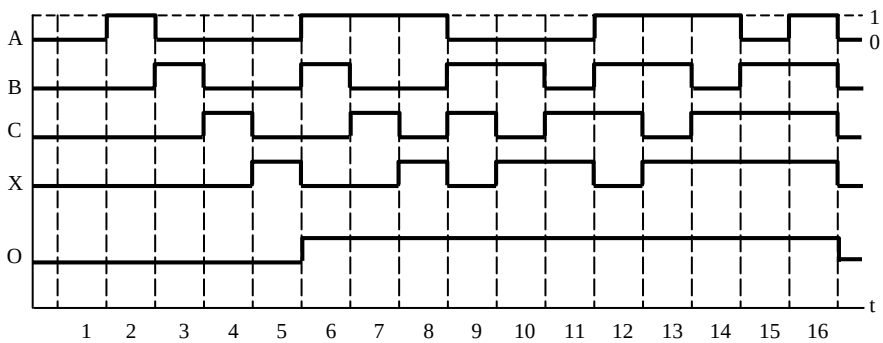

04

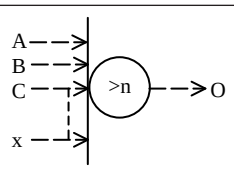

Qualified OR gate with greater than qualifications.
Output equals "1" if number of inputs equal to "1" are greater but not equal to "n" inputs.
Truth table and graph are for "n" equals 2.

	A	B	C	x	O
1	0	0	0	0	0
2	1	0	0	0	0
3	0	1	0	0	0
4	0	0	1	0	0
5	0	0	0	1	0
6	1	1	0	0	0
7	1	0	1	0	0
8	1	0	0	1	0
9	0	1	1	0	0
10	0	1	0	1	0
11	0	0	1	1	1
12	1	1	1	0	1
13	1	1	0	1	1
14	1	0	1	1	1
15	0	1	1	1	1
16	1	1	1	1	1

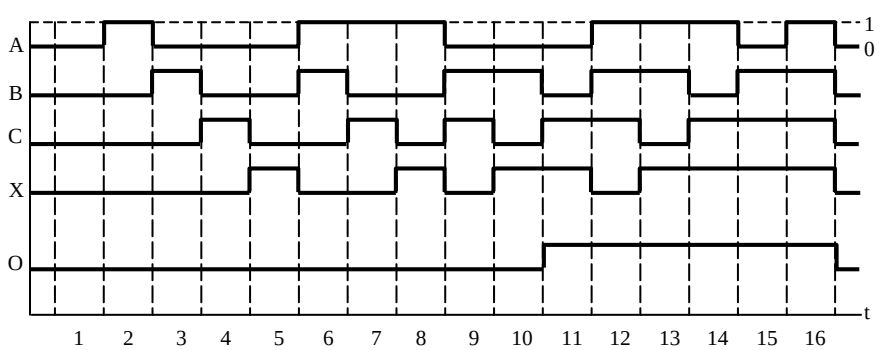

(Continued)

© 2003 by Béla Lipták

TABLE 1.2b Continued

Instrument and Control System Functional Diagramming Symbols—Binary Logic, Memory, and Time Functions (proposed for the next revision of ISA S5.1 [now ANSI/ISA-5.01.01] at the time of this writing)

No.	*Symbol/Truth Table*	*Definition/Graph*
05	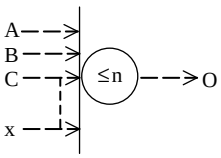	Qualified OR gate with less than or equal to qualifications. Output equals “1” if number of inputs equal to “1” are less than or equal to “n” inputs. Truth table and graph are for “n” equals 2.

	A	B	C	x	O
1	0	0	0	0	0
2	1	0	0	0	1
3	0	1	0	0	1
4	0	0	1	0	1
5	0	0	0	1	1
6	1	1	0	0	1
7	1	0	1	0	1
8	1	0	0	1	1
9	0	1	1	0	1
10	0	1	0	1	1
11	0	0	1	1	1
12	1	1	1	0	0
13	1	1	0	1	0
14	1	0	1	1	0
15	0	1	1	1	0
16	1	1	1	1	0

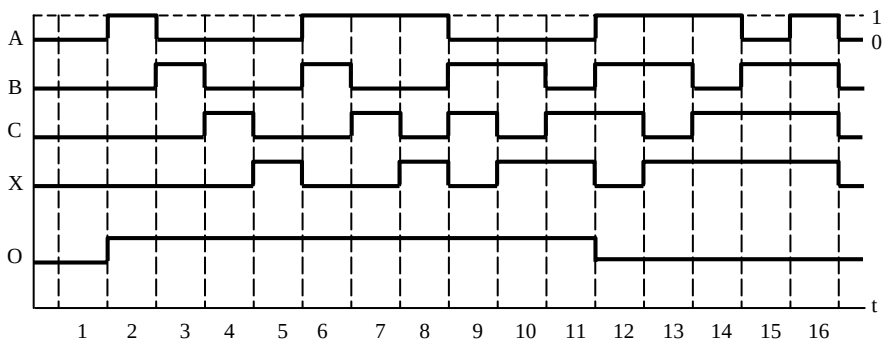

06	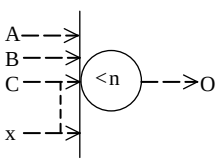	Qualified OR gate with less than qualifications. Output equals “1” if number of inputs equal to “1” are less but not equal to “n” inputs. Truth table and graph are for “n” equals 2.

	A	B	C	x	O
1	0	0	0	0	0
2	1	0	0	0	1
3	0	1	0	0	1
4	0	0	1	0	1
5	0	0	0	1	1
6	1	1	0	0	0
7	1	0	1	0	0
8	1	0	0	1	0
9	0	1	1	0	0
10	0	1	0	1	0
11	0	0	1	1	0
12	1	1	1	0	0
13	1	1	0	1	0
14	1	0	1	1	0
15	0	1	1	1	0
16	1	1	1	1	0

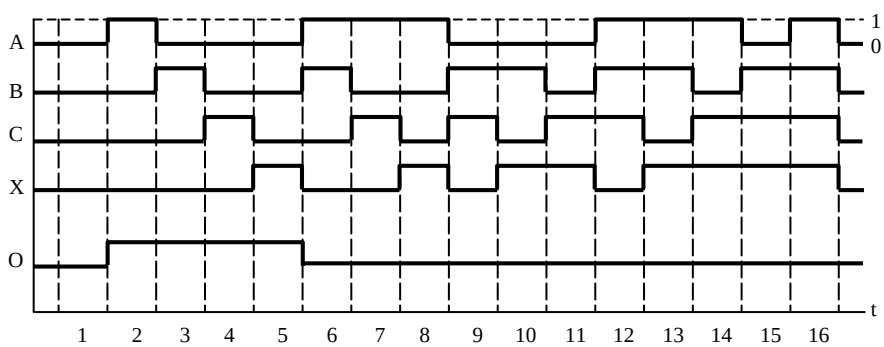

© 2003 by Béla Lipták

TABLE 1.2b Continued

Instrument and Control System Functional Diagramming Symbols—Binary Logic, Memory, and Time Functions (proposed for the next revision of ISA S5.1 [now ANSI/ISA-5.01.01] at the time of this writing)

No.	*Symbol/Truth Table*	*Definition/Graph*

07

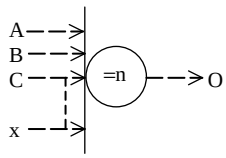

Qualified OR gate with equal to qualifications.
Output equals "1" if inputs equal to "1" are equal to "n" inputs.
Truth table and graph are for "n" equals 2.

	A	B	C	x	O
1	0	0	0	0	0
2	1	0	0	0	0
3	0	1	0	0	0
4	0	0	1	0	0
5	0	0	0	1	0
6	1	1	0	0	1
7	1	0	1	0	1
8	1	0	0	1	1
9	0	1	1	0	1
10	0	1	0	1	1
11	0	0	1	1	1
12	1	1	1	0	0
13	1	1	0	1	0
14	1	0	1	1	0
15	0	1	1	1	0
16	1	1	1	1	0

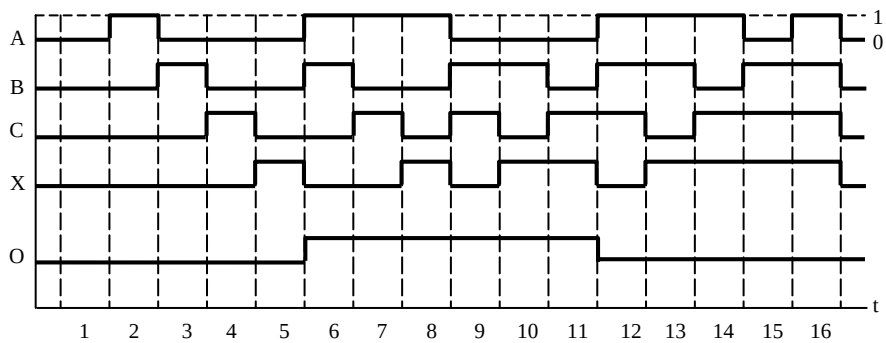

08

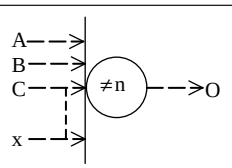

Qualified OR gate with not equal to qualifications.
Output equals "1" if inputs equal to "1" are not equal to "n" inputs.
Truth table and graph are for "n" equals 2.

	A	B	C	x	O
1	0	0	0	0	0
2	1	0	0	0	1
3	0	1	0	0	1
4	0	0	1	0	1
5	0	0	0	1	1
6	1	1	0	0	0
7	1	0	1	0	0
8	1	0	0	1	0
9	0	1	1	0	0
10	0	1	0	1	0
11	0	0	1	1	0
12	1	1	1	0	1
13	1	1	0	1	1
14	1	0	1	1	1
15	0	1	1	1	1
16	1	1	1	1	1

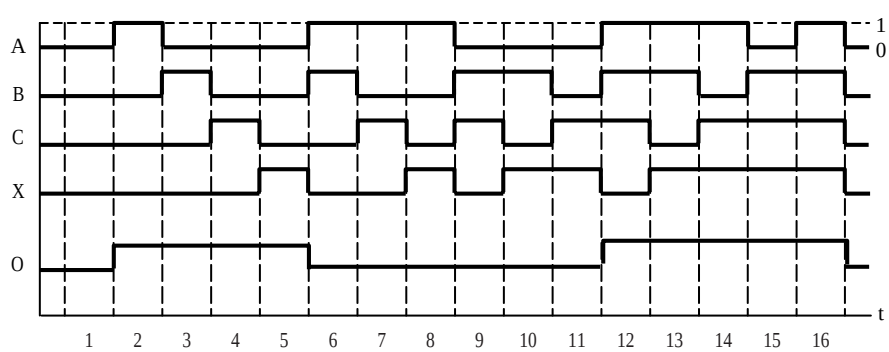

(Continued)

© 2003 by Béla Lipták

TABLE 1.2b Continued

Instrument and Control System Functional Diagramming Symbols—Binary Logic, Memory, and Time Functions (proposed for the next revision of ISA S5.1 [now ANSI/ISA-5.01.01] at the time of this writing)

No.	*Symbol/Truth Table*	*Definition/Graph*
09	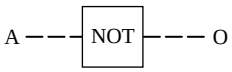	NOT gate. Output is false if input is true. Output is true if input is false.
	A | O 1 | 0 0 | 1	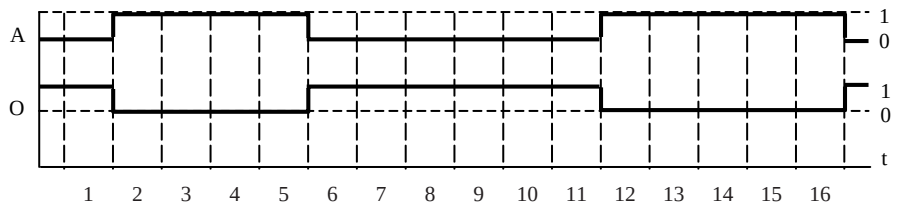
10	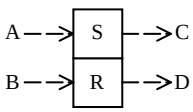	Basic memory. Outputs C and D are always opposite. If input A equals “1”, then output C equals “1”, and D equals “0”. If input A changes to “0”, output C remains “1” until input B equals “1”, then C equals “1”, and D equals “0”. If input B equals “1”, then output D equals “1”, and C equals “0”. If input B changes to “0”, output D remains “1” until input A equals “1”, then D equals “1”, and C equals “0”. If inputs A and B are simultaneously equal to “1”, then outputs C and D change state.
	| A | B | C | D | 1 | 0 | 0 | 0 | 1 | 2 | 1 | 0 | 1 | 0 | 3 | 0 | 0 | 1 | 0 | 4 | 0 | 1 | 0 | 1 | 5 | 0 | 0 | 0 | 1 | 6 | 1 | 1 | 1 | 0 | 7 | 0 | 0 | 1 | 0 | 8 | 1 | 1 | 0 | 1 |	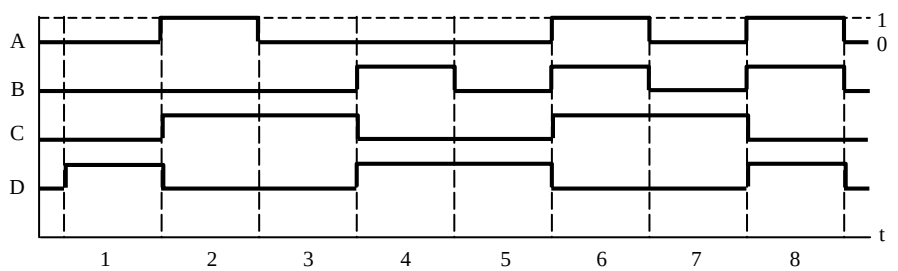
11	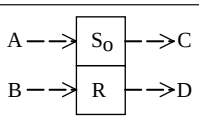	Set dominant memory (“S_o dominant”). Outputs C and D are always opposite. If input A equals “1”, then output C equals “1”, and D equals “0”. If input A changes to “0”, output C remains “1” until input B equals “1”, then output C equals “1”, and D equals “0”. If input B equals “1”, then output D equals “1”, and C equals “0”. If input B changes to “0”, output D remains “1” until input A equals “1”, then output D equals “1”, and C equals “0”. If inputs A and B are simultaneously equal to “1”, then output C equals “1”, and D equals “0”.
	| A | B | C | D | 1 | 0 | 0 | 0 | 1 | 2 | 1 | 0 | 1 | 0 | 3 | 0 | 0 | 1 | 0 | 4 | 0 | 1 | 0 | 1 | 5 | 0 | 0 | 0 | 1 | 6 | 1 | 1 | 1 | 0 | 7 | 0 | 0 | 1 | 0 | 8 | 1 | 1 | 1 | 0 |	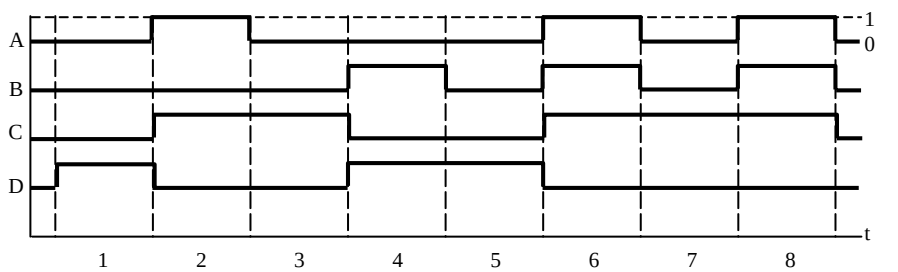

© 2003 by Béla Lipták

TABLE 1.2b Continued

Instrument and Control System Functional Diagramming Symbols—Binary Logic, Memory, and Time Functions (proposed for the next revision of ISA S5.1 [now ANSI/ISA-5.01.01] at the time of this writing)

No.	*Symbol/Truth Table*	*Definition/Graph*
12	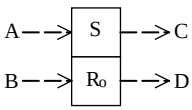	Reset dominant memory ("R_o dominant"). Outputs C and D are always opposite. If input A equals "1", then output C equals "1", and D equals "0". If input A changes to "0", output C remains "1" until input B equals "1", then output C equals "1", and D equals "0". If input B equals "1", then output D equals "1", and C equals "0". If input B changes to "0", output D remains "1" until input A equals "1", then output D equals "1", and C equals "0". If inputs A and B are simultaneously equal to "1", then C equals "0", and D equals "1".
	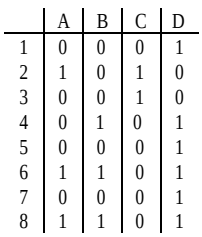	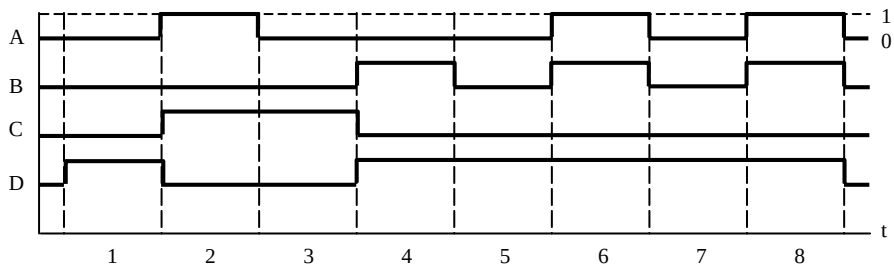
13	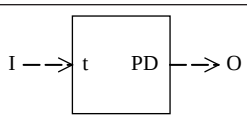	Pulse duration, fixed. Output O changes from "0" to "1" and remains "1" for prescribed time duration "t" when input "I" changes from "0" to "1".
	NONE	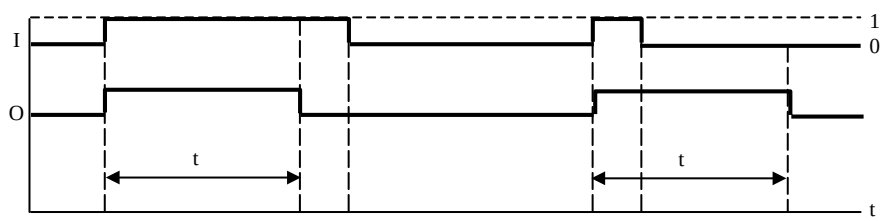
14	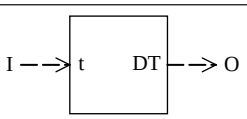	Off-time delay. Output O changes from "0" to "1" when input "I" changes from "0" to "1". Output O changes from "1" to "0" after input I changes from "1" to "0" and has been equal to "0" for time duration "t".
	NONE	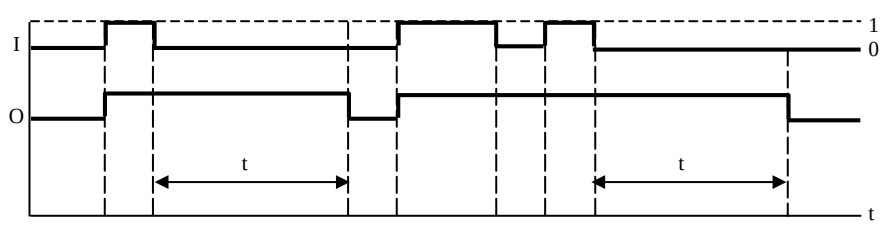

(Continued)

© 2003 by Béla Lipták

TABLE 1.2b Continued

Instrument and Control System Functional Diagramming Symbols—Binary Logic, Memory, and Time Functions (proposed for the next revision of ISA S5.1 [now ANSI/ISA-5.01.01] at the time of this writing)

No.	*Symbol/Truth Table*	*Definition/Graph*
15	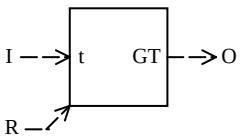 NONE	On-time delay. Output O changes from “0” to “1” after input “I” changes from “0” to “1” and “I” remains “1” for prescribed time duration “t”. Output O remains “1” until a. Input “I” changes to “0”. b. Reset R changes to “1”. 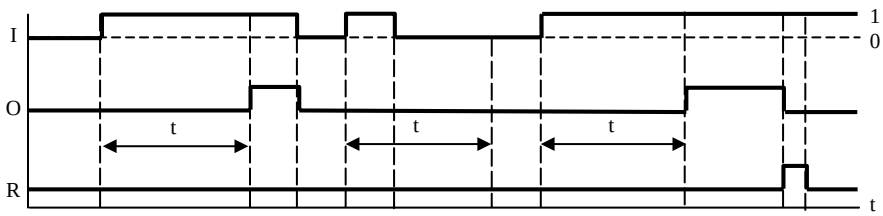
16	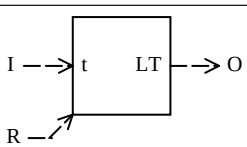 NONE	Pulse duration, variable. Output O changes from “0” to “1” when input “I” changes from “0” to “1”. Output O changes from “1” to “0” when a. Input “I” has equaled “1” for time duration “t”. b. Input “I” changes from “1” to “0”. c. Reset R changes to “1”. 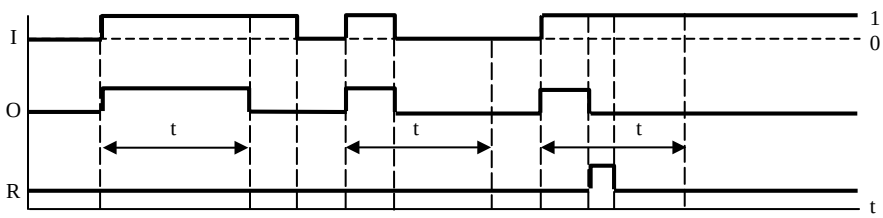

See statement of permission on page 31.

© 2003 by Béla Lipták

TABLE 1.2c

Mathematical Function Block Symbols (proposed for the next revision of ISA S5.1 [now ANSI/ISA-5.01.01] at the time of this writing)

No.	*Symbol/Function*	*Equation/Graph*	*Definition*
01	Σ Summation	$M = X_1 + X_2 \ldots + X_n$ 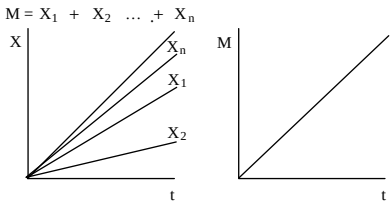	Output equals the algebraic sum of inputs.
02	Σ/n Average	$M = X_1 + X_2 \ldots + X_n/n$ 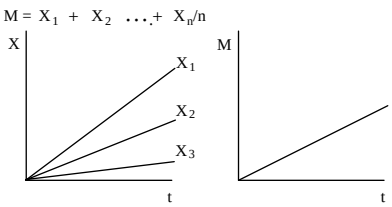	Output equals the algebraic sum of the inputs divided by number of inputs.
03	Δ Difference	$M = X_1 - X_2$ 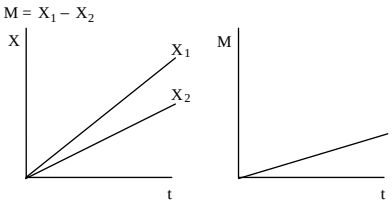	Output equals the difference between two inputs.
04	X Multiplication	$M = X_1 X_2$ 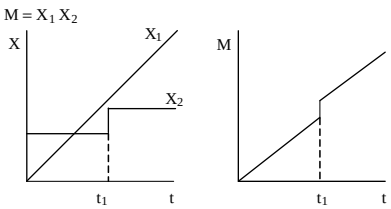	Output equals the product of the two inputs.
05	$\div$ Division	$M = X_1 / X_2$ 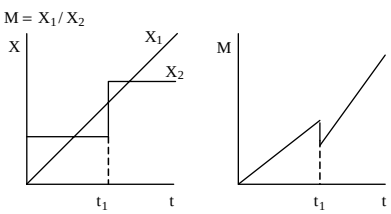	Output equals the quotient of the two inputs.
06	x^2 Square	$M = X^2$ 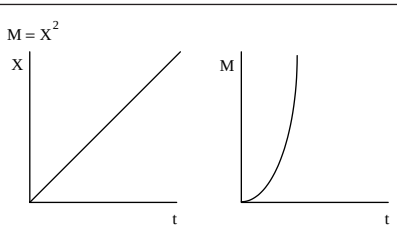	Output is equal to the square of the input.
07	x^n Exponential	$M = X^n$ 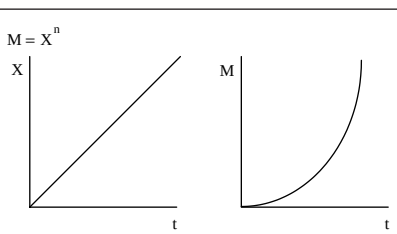	Output is equal to the *n*th power of the input.

(Continued)

© 2003 by Béla Lipták

TABLE 1.2c Continued

Mathematical Function Block Symbols (proposed for the next revision of ISA S5.1 [now ANSI/ISA-5.01.01] at the time of this writing)

No.	*Symbol/Function*	*Equation/Graph*	*Definition*
08	$\sqrt{}$ Square Root	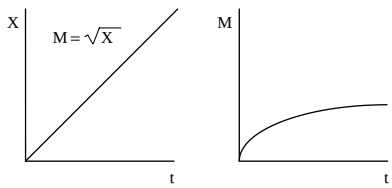	Output is equal to the square root of the input.
09	$\sqrt[n]{}$ *n*th Root	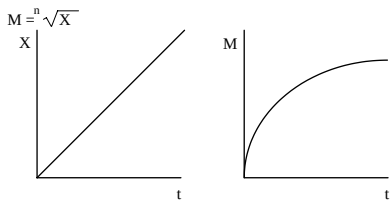	Output is equal to the *n*th root of the input.
10	K or P Proportional	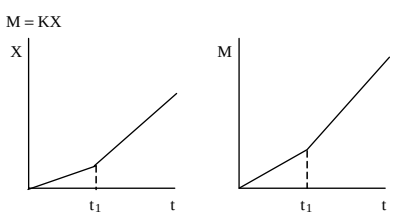	Output is proportional to the input. Replace “K” with “1:1” for volume boosters. Replace “K” with “2:1”, ‘3:1”, etc. for integer gains.
11	-K or -P Reverse Proportional	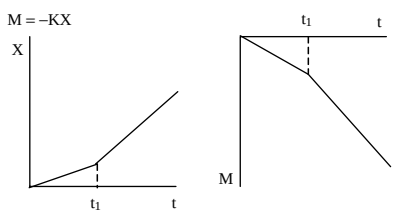	Output is inversely proportional to the input.
12	∫ or I Integral	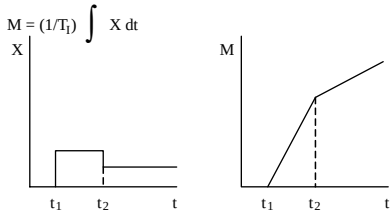	Output varies with the magnitude and time duration of the input. Output is proportional to the time integral of the input. T_I, the integral time constant.
13	d/dt or D Derivative	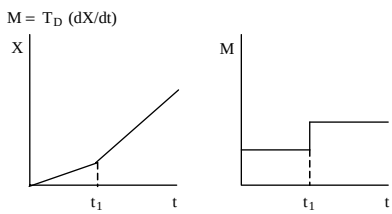	Output is proportional to the time rate of change of the input. T_D, derivative time constant.
14	*f*(X) Unspecified Function	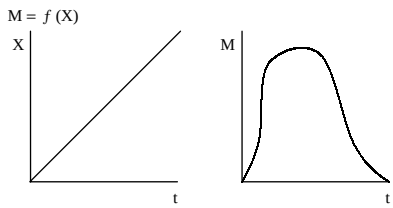	Output is a nonlinear or unspecified function of the input. Function is defined in note or other text.

© 2003 by Béla Lipták

TABLE 1.2c Continued

Mathematical Function Block Symbols (proposed for the next revision of ISA S5.1 [now ANSI/ISA-5.01.01] at the time of this writing)

No.	*Symbol/Function*	*Equation/Graph*	*Definition*
15	$f(t)$ Time Function	$M = X f(t)$ 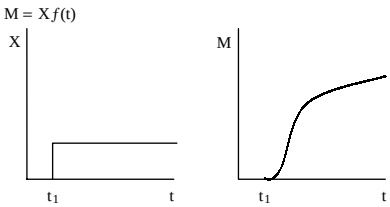	Output equals a nonlinear or unspecified time function times the input. Output is a nonlinear or unspecified time function.
16	$>$ High Select	$M = X_1$ for $X_1 \geq X_2$, $M = X_2$ for $X_1 \leq X_2$ 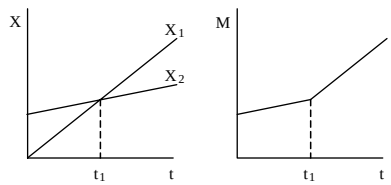	Output equals greater of two or more inputs.
17	$<$ Low Select	$M = X_1$ for $X_1 \leq X_2$, $M = X_2$ for $X_1 \geq X_2$ 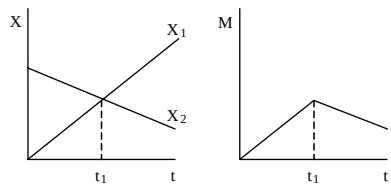	Output equals lesser of two or more inputs.
18	∇ High Limit	$M = X_1$ for $X_1 \leq H$, $M = X_2$ for $X_1 \geq H$ 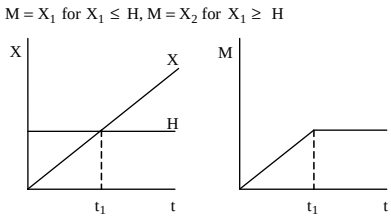	Output equals the lower of the input or high limit values.
19	$\triangle$ Low Limit	$M = X_1$ for $X_1 \geq L$, $M = X_2$ for $X_1 \leq L$ 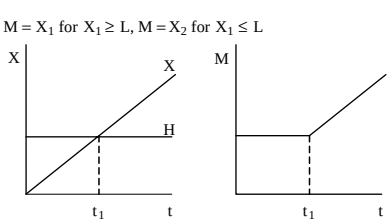	Output equals the higher of the input or low limit values.
20	V Velocity Limiter	$dM/dt = dX/dt$ ($dX/dt \leq H$, $M = X$) $dM/dt = H$ ($dX/dt \geq H$, $M \neq X$) 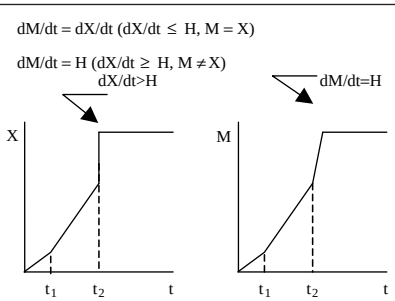	Output equals input as long as the input rate of change does not exceed the limit value that establishes the output rate of change until the output again equals the input.

(Continued)

© 2003 by Béla Lipták

TABLE 1.2c Continued

Mathematical Function Block Symbols (proposed for the next revision of ISA S5.1 [now ANSI/ISA-5.01.01] at the time of this writing)

No.	*Symbol/Function*	*Equation/Graph*	*Definition*
21	+ Positive Bias	M = X + b 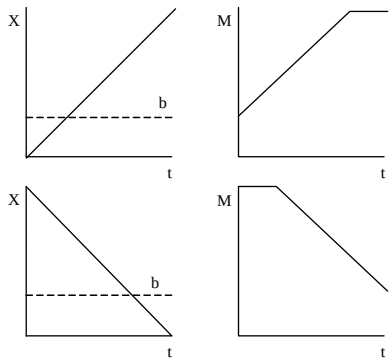	Output is equal to input plus an arbitrary value.
22	– Negative Bias	M = X – b 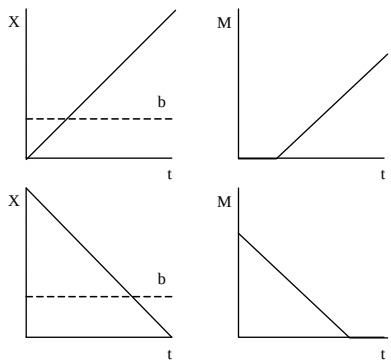	Output is equal to input minus an arbitrary value.
25	*/* Conversion	I = P, P = I, etc. 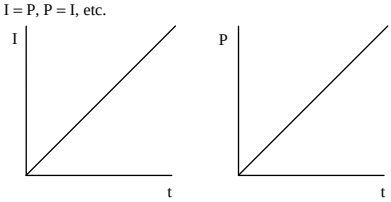	Output signal type is different from that of input signal. * is equal to: E – voltage, A – analog I – current, B – binary P – pneumatic, D – digital R – resistance, H – hydraulic O – electromagnetic, sonic
26	*H High Signal Monitor	(State 1) M = 0 @ X < H (State 2) M = 1 @ X ≥ H 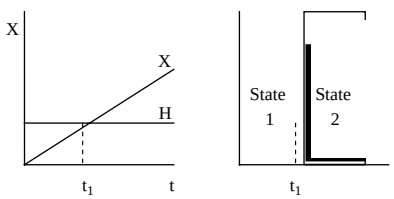	Output state is dependent on the value of the input. Output changes state when the input is equal to or higher than an arbitrary high limit.
27	*L Low Signal Monitor	(State 1) M = 0 @ X ≤ H (State 2) M = 1 @ X > H 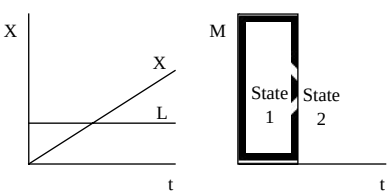	Output state is dependent on the value of the input. Output changes state when the input is equal to or lower than an arbitrary low limit.

© 2003 by Béla Lipták

TABLE 1.2c Continued

Mathematical Function Block Symbols (proposed for the next revision of ISA S5.1 [now ANSI/ISA-5.01.01] at the time of this writing)

No.	*Symbol/Function*	*Equation/Graph*	*Definition*
28	*HL High/Low Signal Monitor	(State 1) M = 1 @ X ≤ L (State 2) M = 0 @ L < X < H (State 3) M = 1 @ X ≥ H 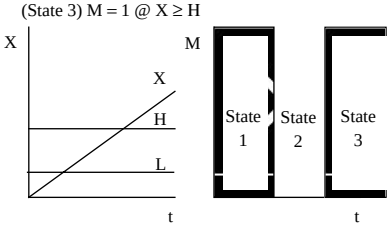	Output states are dependent on value of input. Output changes state when input is equal to or lower than an arbitrary low limit or equal to or higher than an arbitrary high limit.
29	T Transfer	(State 1) M = X_1 (State 2) M = X_2 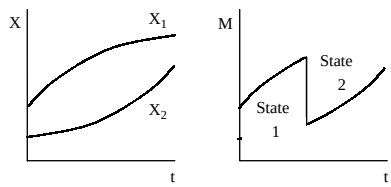	Output equals input that is selected by transfer. Transfer is actuated by external signal.

See statement of permission on page 31.

© 2003 by Béla Lipták

1.3 Instrument Terminology and Performance*

B. G. LIPTÁK (1982, 1995, 2003)

This section was reprinted with format change only from the work titled "Process Instrumentation Terminology (ANSI/ISA-51.1-1979, Reaffirmed 26 May 1995)" with the permission of The Instrumentation, Systems and Automation Society. This permission is gratefully acknowledged. When using the definitions in this document, please indicate, "This definition is from ANSI/ISA-51.1–1979 (R1993), Process Instrumentation Terminology. Copyright © 1993, ISA—The Instrumentation, Systems and Automation Society." For information, visit www.isa.org.

The purpose of this standard is to establish uniform terminology in the field of process instrumentation. The generalized test procedures described in the section titled "Test Procedures" are intended only to illustrate and clarify accuracy-related terms. It is not intended that they describe specific and detailed test procedures.

This process instrumentation terminology standard is intended to include many specialized terms used in the industrial process industries to describe the use, performance, operating influences, hardware, and product qualification of the instrumentation and instrument systems used for measurement, control, or both. Many terms and definitions relate to performance tests and environmental influences (operating conditions) as further explained in the "Introductory Notes" section. Basically, this document is a guideline to promote vendor/user understanding when referring to product specifications, performance, and operating conditions. Process industries include chemical, petroleum, power generation, air conditioning, metallurgical, food, textile, paper, and numerous other industries.

The terms of this standard are suitable for use by people involved in all activities related to process instrumentation, including research, design, manufacture, sales, installation, test, use, and maintenance.

The standard consists of terms selected primarily from Scientific Apparatus Makers Association (SAMA) Standard PMC20.1 and American National Standards Institute (ANSI) Standard C85.1. Additional terms have been selected from other recognized standards. Selected terms and definitions have not been modified unless there was a sufficiently valid reason for doing so. New terms have been added and defined where necessary.

This standard is primarily intended to cover the field of analog measurement and control concepts and makes no effort to develop terminology in the field of digital measurement and control.

INTRODUCTORY NOTES

Defined terms, where used as a part of other definitions, are set in italics to provide a ready cross-reference. In defining certain performance terms, the context in which they are used has been considered. It is fitting, therefore, that the philosophy of performance evaluation on which these terms are based be explained.

Ideally, instruments should be designed for realistic operating conditions (those they are likely to meet in service), and they should be evaluated under the same conditions. Unfortunately, it is not practical to evaluate performance under all possible combinations of operating conditions. A test procedure must be used that is practical under laboratory conditions and, at the same time, will make available, with a reasonable amount of effort, sufficient data on which a judgement of field performance can be made.

The method of evaluation envisioned is that of checking significant performance characteristics such as accuracy rating, dead band, and hysteresis under a set of reference operating conditions, these having a narrow range of tolerances.

Reference performance is, therefore, to be evaluated and stated in terms of reference operating conditions. Generally, reference performance under reference operating conditions represents the "best" performance that can be expected under ideal conditions.

The effect of change in an individual operating condition, such as ambient temperature, atmospheric pressure, relative humidity, line voltage, and frequency, will be determined individually throughout a range defined as "normal operating conditions." Logically, these can be expected to occur above and below the values of reference operating conditions during field operation.

While this approach does not duplicate all actual conditions, where many operating variables may vary simultaneously in random fashion, it does develop data from which

* Used with permission of the Instrumentation, Systems and Automation Society.

© 2003 by Béla Lipták

performance may be inferred from any given set of operating conditions.

The effect of changes in an individual operating condition, all other operating conditions being held within the reference range, is herein called *operating influence.* There may be an operating influence corresponding to a change in each operating condition. In some cases, the effect may be negligible; in others, it may have significant magnitude.

Tabulations of operating influences will usually denote the performance quality level of a given design. Comparisons of reference performance and operating influences for instruments of a given design, or for different designs, will show clearly their relative merits and probable performance under actual operating conditions.

Operating Conditions vs. Performance

Operating Conditions	*Performance*
Reference (narrowband)	Reference (Region within which accuracy statements apply unless indicated otherwise.)
Normal (wideband)	Conditional (Region within which the influence of environment on performance is stated.)
Operative Limits (extreme band)	Indefinite (Region within which influences are not stated and beyond which damage may occur.)

SOURCES AND REFERENCES

In the preparation of this standard of terminology, many standards and publications sponsored by technical organizations such as the American Society of Mechanical Engineers (ASME), the Institute of Electrical and Electronics Engineers (IEEE), and ISA (formerly called the Instrument Society of America) were studied by the committee, in addition to those listed as principal source documents. These are listed as references.

Existing terms and definitions have been used wherever they were considered suitable. In many cases, terms have been extracted from source documents with verbatim definitions. In such cases, permission to quote from the respective source document has been obtained from the organization concerned, as indicated below. Terms defined verbatim are followed by the reference number in parentheses. For example, (4) after a defined term indicates that this term is quoted verbatim from ANSI C85.1, "Terminology for Automatic Control."

In other cases, definitions have been modified in varying degrees to conform with current practice in process instrumentation. These have been noted in parentheses as "Ref." followed by the reference number. For example, (Ref. 8) indicates that this term is a modified definition of the referenced term in SAMA-PMC 20.1–1973, "Process Measurement and Control Terminology."

An omission or alteration of a note following a definition is not considered to be a modification of the definition and is not identified by the abbreviation "Ref."

Principal source documents used from the many reviewed are as follows:

1) American National Standard C39.4–1966, "Specifications for Automatic Null-Balancing Electrical Measuring Instruments," published by the American National Standards Institute, Inc., copyright 1966 by ANSI.
2) American National Standard C42.100–1972, "Dictionary of Electrical and Electronics Engineers, Inc., copyright 1972 by IEEE.
3) American National Standard C85.1–1963, "Terminology for Automatic Control," published by the American Society of Mechanical Engineers, copyright 1963 by ASME.
4) SAMA Standard PMC20.1–1973, "Process Measurement and Control Terminology," published by Scientific Apparatus Makers Association, Process Measurement and Control Section, Inc., copyright 1973 by SAMA-PMC.

Copies of the American National Standards referred to above may be purchased from the American National Standards Institute, 1430 Broadway, New York, NY 10018. Copies of the SAMA Standard may be purchased from Process Measurement and Control Section, Inc., SAMA, 1101 16th Street N.W., Washington, DC 20036.

DEFINITION OF TERMS

Accuracy.* In process instrumentation, degree of *conformity* of an indicated value to a recognized accepted standard value, or ideal value. (Ref. 4, Ref. 8)

Accuracy, measured. The maximum positive and negative *deviation* observed in testing a *device* under specified conditions and by a specified procedure. See Figure 1.3a. *Note 1:* It is usually measured as an inaccuracy and expressed as accuracy. *Note 2:* It is typically expressed in terms of the measured variable, percent of span, percent of upper range value, percent of scale length, or percent of actual output reading. See section titled "Test Procedures."

Accuracy rating. In process instrumentation, a number or quantity that defines a limit that *errors* will not exceed when a *device* is used under specified *operating conditions*. See Figure 1.3a. *Note 1:* When operating conditions are not specified, *reference operating conditions* shall be assumed. *Note 2:* As a performance specification, *accuracy* (or reference accuracy)

* Throughout this handbook, the term *inaccuracy* has been used instead of *accuracy,* because the term relates to the error in a measurement. In the following paragraphs, the *accuracy* term is used, because this section is being quoted from an ISA standard and not because the author agrees with its use.

© 2003 by Béla Lipták

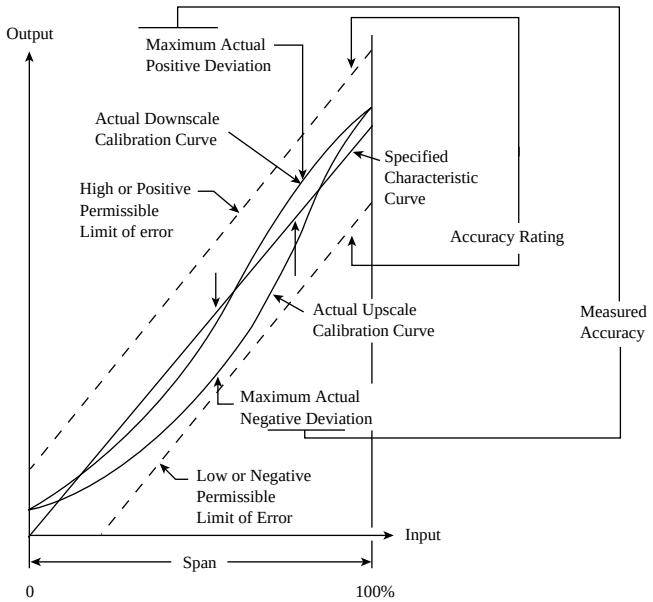

FIG. 1.3a
Accuracy.

shall be assumed to mean accuracy rating of the *device* when used at *reference operating conditions*. *Note 3:* Accuracy rating includes the combined effects of *conformity, hysteresis, dead band,* and *repeatability* errors. The units being used are to be stated explicitly. It is preferred that a ± sign precede the number or quantity. The absence of a sign indicates a + and a − sign.

Accuracy rating can be expressed in a number of forms. The following five examples are typical:

(a) Accuracy rating expressed in terms of the *measured variable.* Typical expression: The accuracy rating is ±1°C, or ±2°F.
(b) Accuracy rating expressed in percent of *span.* Typical expression: The accuracy rating is ±0.5% of span. (This percentage is calculated using scale units such as degrees Fahrenheit, psig, and so forth.)
(c) Accuracy rating expressed in percent of the upper range value. Typical expression: The accuracy rating is ±0.5% of upper range value. (This percentage is calculated using scale units such as kPa, degrees Fahrenheit, and so forth.)
(d) Accuracy rating expressed in percent of scale length. Typical expression: The accuracy rating is ±0.5% of scale length.
(e) Accuracy rating expressed in percent of actual output reading. Typical expression: The accuracy rating is ±1% of actual output reading.

Accuracy, reference. See *accuracy rating.*
Actuating error signal. See *signal, actuating error.*
Adaptive control. See *control, adaptive.*
Adjustment, span. Means provided in an instrument to change the slope of the input–output curve. See *span shift.*
Adjustment, zero. Means provided in an instrument to produce a parallel shift of the input–output curve. See *zero shift.*
Air conditioned area. See *area, air conditioned.*
Air consumption. The maximum rate at which air is consumed by a *device* within its operating *range* during *steady-state signal conditions. Note:* It is usually expressed in cubic feet per minute (ft^3/min) or cubic meters per hour (m^3/h) at a standard (or normal) specified temperature and pressure. (8)
Ambient pressure. See *pressure, ambient.*
Ambient temperature. See *temperature, ambient.*
Amplifier. A *device* that enables an *input signal* to control power from a source independent of the *signal* and thus be capable of delivering an output that bears some relationship to, and is generally greater than, the *input signal.* (3)
Analog signal. See *signal, analog.*
Area, air conditioned. A location in which temperature at a nominal value is maintained constant within narrow tolerance at some point in a specified band of typical comfortable room temperature. Humidity is maintained within a narrow specified band. *Note:* Air conditioned areas are provided with clean air circulation and are typically used for instrumentation, such as computers or other equipment requiring a closely controlled environment. (Ref. 18)
Area, control room. A location with heat and/or cooling facilities. Conditions are maintained within specified limits. Provisions for automatically maintaining constant temperature and humidity may or may not be provided. *Note:* Control room areas are commonly provided for operation of those parts of a *control system* for which operator surveillance on a continuing basis is required. (18)
Area, environmental. A basic qualified location in a plant with specified environmental conditions dependent on severity. *Note:* Environmental areas include *air conditioned areas; control room areas,* heated and/or cooled; *sheltered areas (process* facilities); and *outdoor areas* (remote field sites). See specific definitions.
Area, outdoor. A location in which equipment is exposed to outdoor ambient conditions, including temperature, humidity, direct sunshine, wind, and precipitation. (Ref. 18)
Area, sheltered. An industrial *process* location, area, storage, or transportation facility, with protection against direct exposure to the elements, such as direct sunlight, rain or other precipitation, or full wind pressure. Minimum and maximum temperatures and humidity may be the same as outdoors. Condensation can occur. Ventilation, if any, is by natural means. *Note:* Typical areas are shelters for

© 2003 by Béla Lipták

operating instruments, unheated warehouses for storage, and enclosed trucks for transportation. (18)

Attenuation. (1) A decrease in *signal* magnitude between two points or between two frequencies. (2) The reciprocal of *gain. Note:* It may be expressed as a dimensionless ratio, scalar ratio, or in decibels as 20 times the $\log_{10}$ of that ratio. (Ref. 4)

Auctioneering device. See *signal selector.*

Automatic control system. See *control system, automatic.*

Automatic/manual station. A *device* that enables an operator to select an automatic *signal* or a manual *signal* as the input to a controlling element. The automatic *signal* is normally the output of a *controller,* while the manual *signal* is the output of a manually operated *device.*

Backlash. In process instrumentation, a relative movement between interacting mechanical parts, resulting from looseness when motion is reversed. (Ref. 4)

Bode diagram. In process instrumentation, a plot of log gain (magnitude ratio) and phase angle values on a log frequency base for a *transfer function.* See Figure 1.3b. (8, Ref. 4)

Break point. The junction of the extension of two confluent straight line segments of a plotted curve. *Note:* In the asymptotic approximation of a log-gain vs. log-frequency relation in a Bode diagram, the value of the abscissa is called the *corner frequency.* See Figure 1.3b. (4, 8)

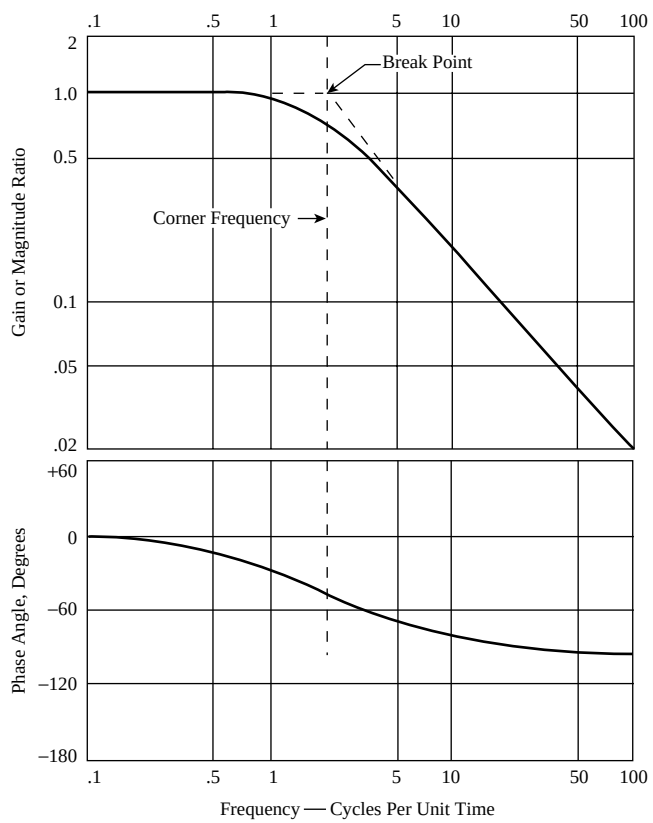

FIG. 1.3b
Typical Bode diagram.

Calibrate. To ascertain outputs of a *device* corresponding to a series of values of a quantity that the *device* is to measure, receive, or transmit. Data so obtained are used to:

1. Determine the locations at which scale graduations are to be placed
2. Adjust the output, to bring it to the desired value, within a specified tolerance
3. Ascertain the *error* by comparing the *device* output reading against a standard (Ref. 3)

Calibration curve. A graphical representation of the *calibration report.* (Ref. 11) For example, see Figure 1.3ff.

Calibration cycle. The application of known values of the *measured variable* and the recording of corresponding values of *output* readings, over the *range* of the instrument, in ascending and descending directions. (Ref. 11)

Calibration report. A table or graph of the measured relationship of an instrument as compared, over its *range,* against a standard. (Ref. 8) For example, see Table 1.3gg.

Calibration traceability. The relationship of the calibration of an instrument through a step-by-step process to an instrument or group of instruments calibrated and certified by a national standardizing laboratory. (Ref. 11)

Cascade control. See *control, cascade.*

Characteristic curve. A graph (curve) that shows the ideal values at *steady state,* or an output variable of a system as a function of an input variable, the other input variables being maintained at specified constant values. *Note:* When the other input variables are treated as *parameters,* a set of characteristic curves is obtained. (Ref. 17)

Closed loop. See *loop, closed.*

Closed-loop gain. See *gain, closed-loop.*

Coefficient, temperature/pressure/etc. See *operating influence.*

Cold junction. See *reference junction.*

Common-mode interference. See *interference, common-mode.*

Common-mode rejection. The ability of a circuit to discriminate against a *common-mode voltage. Note:* It may be expressed as a dimensionless ratio, a scalar ratio, or in decibels as 20 times the $\log_{10}$ of that ratio.

Common-mode voltage. See *voltage, common-mode.*

Compensation. In process instrumentation, provision of a special construction, a supplemental device or circuit, or special materials to counteract sources of error due to variations in specified operating conditions. (Ref. 11)

Compensator. A device that converts a signal into some function that, either alone or in combination with other signals, directs the final controlling element to

© 2003 by Béla Lipták

reduce deviations in the directly controlled variable. See Figures 1.3j and 1.3k for application of "setpoint compensator" and "load compensator."

Compliance. The reciprocal of stiffness.

Computing instrument. See *instrument, computing.*

Conformity (of a curve). The closeness to which the curve approximates a specified one (e.g., logarithmic, parabolic, cubic, and so on). *Note 1:* It is usually measured in terms of nonconformity and expressed as conformity, e.g., the maximum deviation between an average curve and a specified curve. The average curve is determined after making two or more full-range traverses in each direction. The value of conformity is referred to the output unless otherwise stated. See *linearity. Note 2:* As a performance specification, conformity should be expressed as independent conformity, terminal-based conformity, or zero-based conformity. When expressed simply as conformity, it is assumed to be independent conformity. (8, Ref. 4)

Conformity, independent. The maximum deviation of the calibration curve (average of upscale and downscale readings) from a specified characteristic curve positioned so as to minimize the maximum deviation. See Figure 1.3c. (8)

Conformity, terminal-based. The maximum deviation of the calibration curve (average of upscale and downscale readings) from a specified characteristic curve positioned so as to coincide with the actual characteristic curve at upper and lower range values. See Figure 1.3d. (8)

Conformity, zero-based. The maximum deviation of the calibration curve (average of upscale and downscale readings) from a specified characteristic curve positioned so as to coincide with the actual characteristic curve at the lower range value. See Figure 1.3e. (Ref. 8)

Contact, operating conditions, normal. See *operating conditions, normal.*

Control action. Of a controller or of a controlling system, the nature of the change of the output effected by the input. *Note:* The output may be a signal or a value of a manipulated variable. The input may be the control loop feedback signal when the setpoint is constant, an actuating error signal, or the output of another controller. (Ref. 4, Ref. 8)

Control action, derivative (rate) (d). Control action in which the output is proportional to the rate of change of the input. (8, Ref. 4)

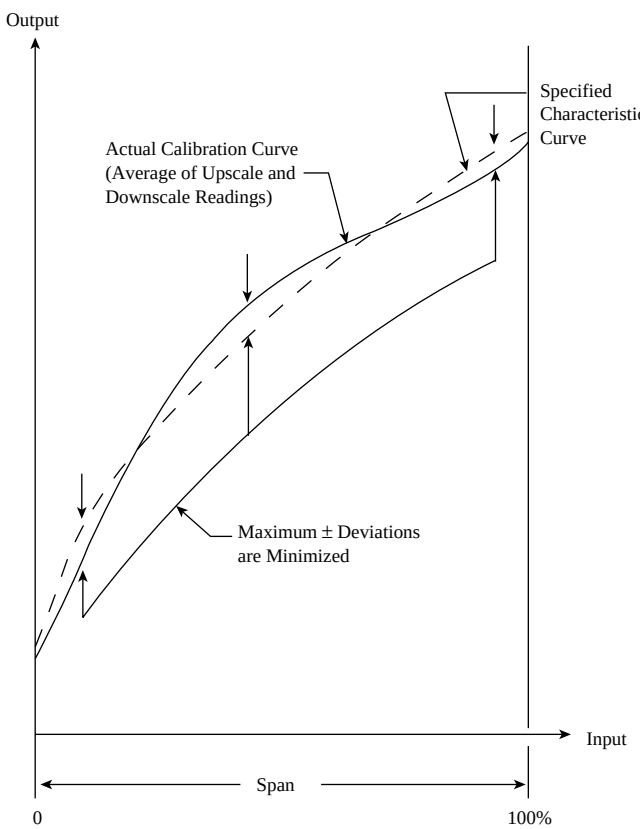

FIG. 1.3c
Independent conformity.

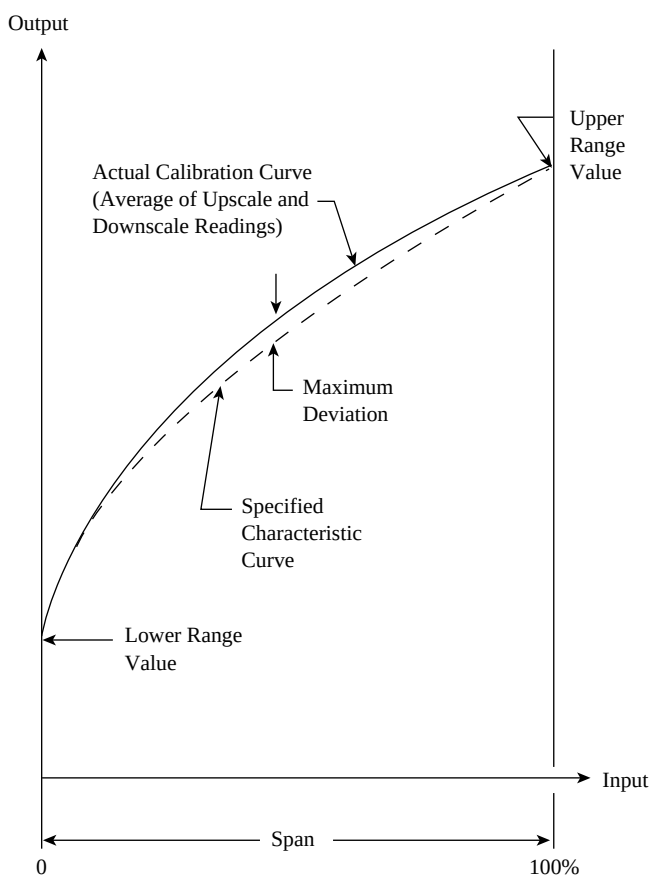

FIG. 1.3d
Terminal-based conformity.

© 2003 by Béla Lipták

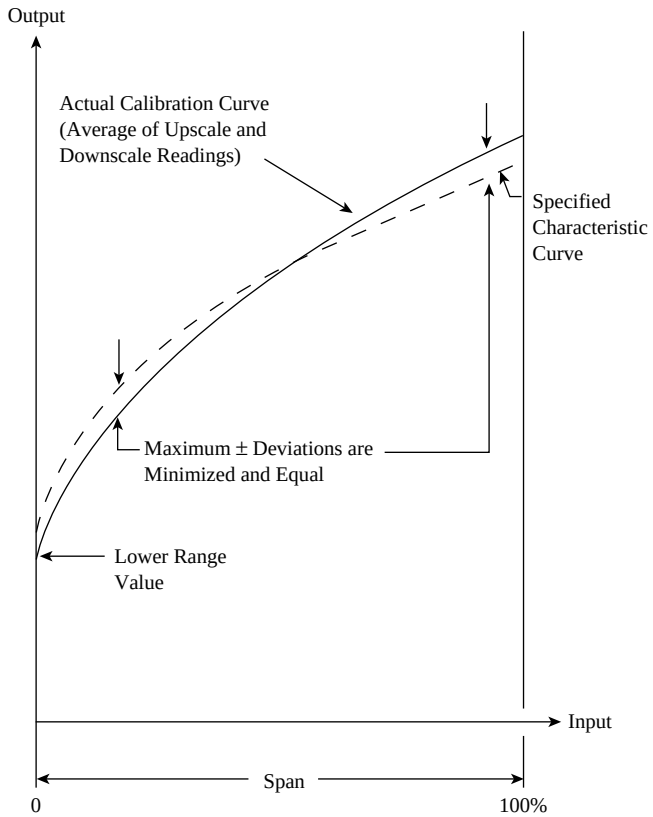

FIG. 1.3e
Zero-based conformity.

Control action, floating. Control action in which the rate of change of the output variable is a predetermined function of the input variable. *Note:* The rate of change may have one absolute value, several absolute values, or any value between two predetermined values. (Ref. 17, "floating action")

Control action, integral (reset) (i). Control action in which the output is proportional to the time integral of the input; i.e., the rate of change of output is proportional to the input. See Figure 1.3f. *Note:* In the practical embodiment of integral control action, the relation between output and input, neglecting high-frequency terms, is given by

$$\frac{Y}{X} = \pm\frac{I/s}{bI/s+1}, \quad \text{where } 0 \leqq b \ll 1 \qquad \textbf{1.3(1)}$$

and

b = reciprocal of *static gain*
$1/2\pi$ = *gain crossover frequency* in hertz
s = complex variable
X = input transform
Y = output transform
I = *integral action rate* (4, 8)

See note under *control action*.

Control action, proportional (p). Control action in which there is a continuous linear relation between the output and the input. *Note:* This condition applies when both the output and input are within their normal operating *ranges* and when operation is at a frequency below a limiting value. (4, 8) See note under *control action.*

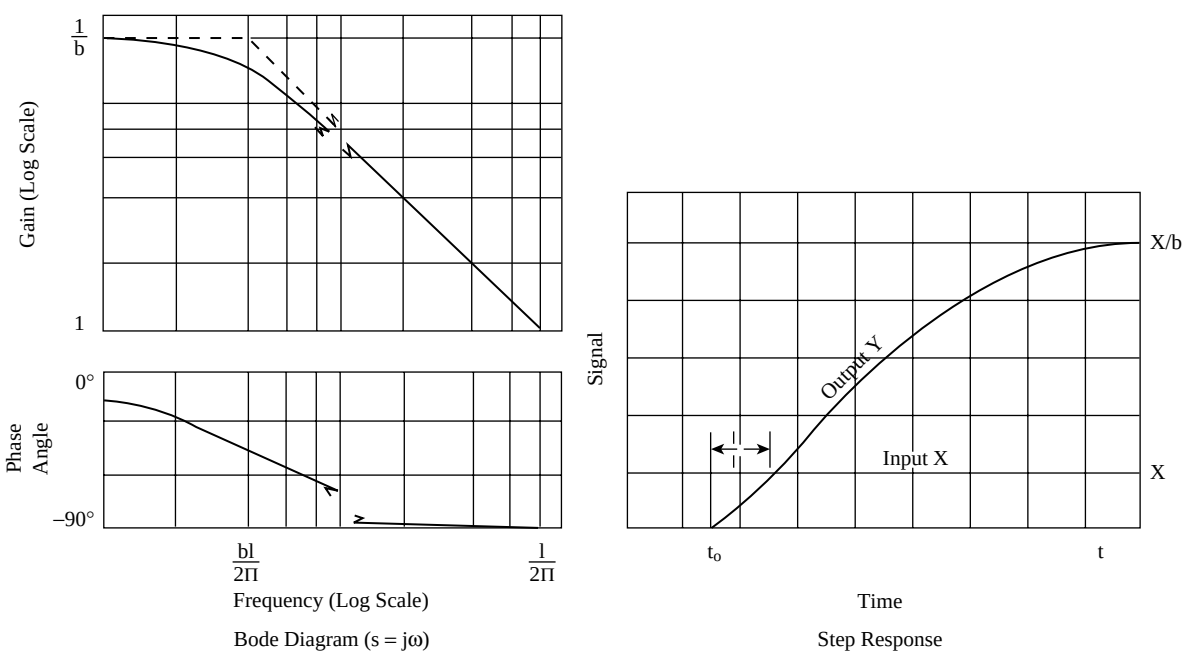

FIG. 1.3f
Integral control action.

© 2003 by Béla Lipták

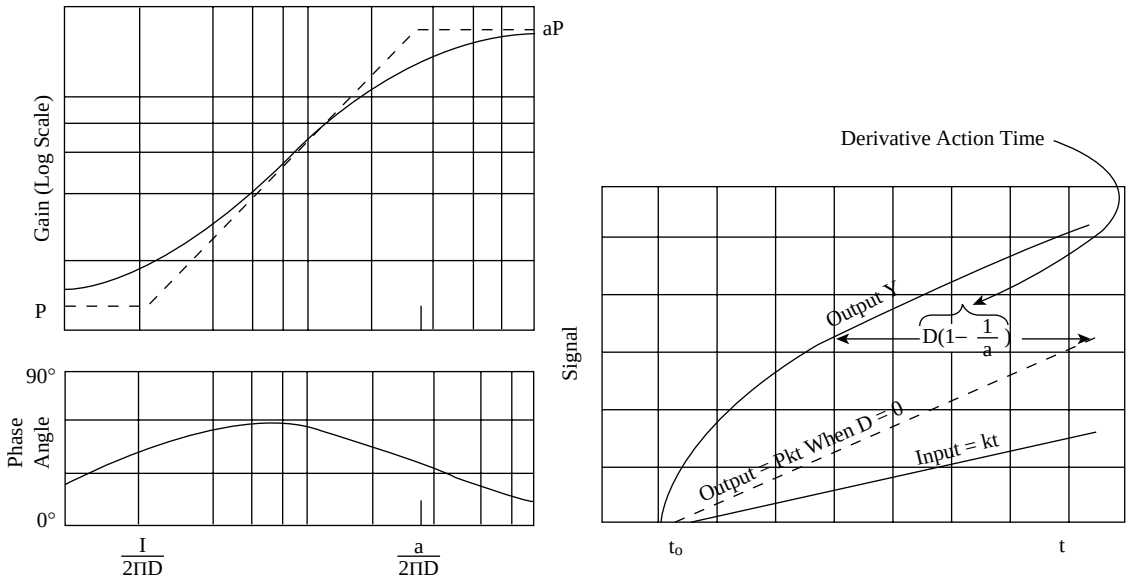

FIG. 1.3g
Proportional plus derivative control action.

Control action, proportional plus derivative (rate) (pd). Control action in which the output is proportional to a linear combination of the input and the time rate of change of the input. See Figure 1.3g. *Note:* In the practical embodiment of proportional plus derivative control action, the relationship between output and input, neglecting high frequency terms, is

$$\frac{Y}{X} = \pm P\frac{1+sD}{1+sD/a}, \quad \text{where } a > 1 \qquad \textbf{1.3(2)}$$

a = *derivative action gain*
D = *derivative action time constant*
P = *proportional gain*
s = complex variable
X = input transform
Y = output transform (4, 8)

See note under *control action.*

Control action, proportional plus integral (reset) (pi). Control action in which the output is proportional to a linear combination of the input and the time integral of the input. See Figure 1.3h. *Note:* In the practical embodiment of proportional plus integral control action, the relationship between output and input, neglecting high-frequency terms, is

$$\frac{Y}{X} = \pm P\frac{I/s+1}{bI/s+1}, \quad \text{where } 0 \leqq b \ll 1 \qquad \textbf{1.3(3)}$$

and

b = *proportional gain/static gain*
I = *integral action rate*
P = *proportional gain*
s = complex variable
X = input transform
Y = output transform (4, 8)

See note under *control action.*

Control action, proportional plus integral (reset) plus derivative (rate) (pid). Control action in which the output is proportional to a linear combination of the input, the time integral of input, and the time rate of change of input. See Figure 1.3i. *Note:* In the practical embodiment of proportional plus integral plus derivative control action, the relationship of output to input, neglecting high-frequency terms, is

$$\frac{Y}{X} = \pm P\frac{I/s+1+Ds}{bI/s+1+Ds/a}, \quad \text{where } a > 1.0 \leqq b \ll 1 \qquad \textbf{1.3(4)}$$

and

a = *derivative action gain*
b = *proportional gain/static gain*
D = *derivative action time constant*
I = *integral action rate*
P = *proportional gain*
s = complex variable
X = input transform
Y = output transform (4, 8)

See note under *control action.*

© 2003 by Béla Lipták

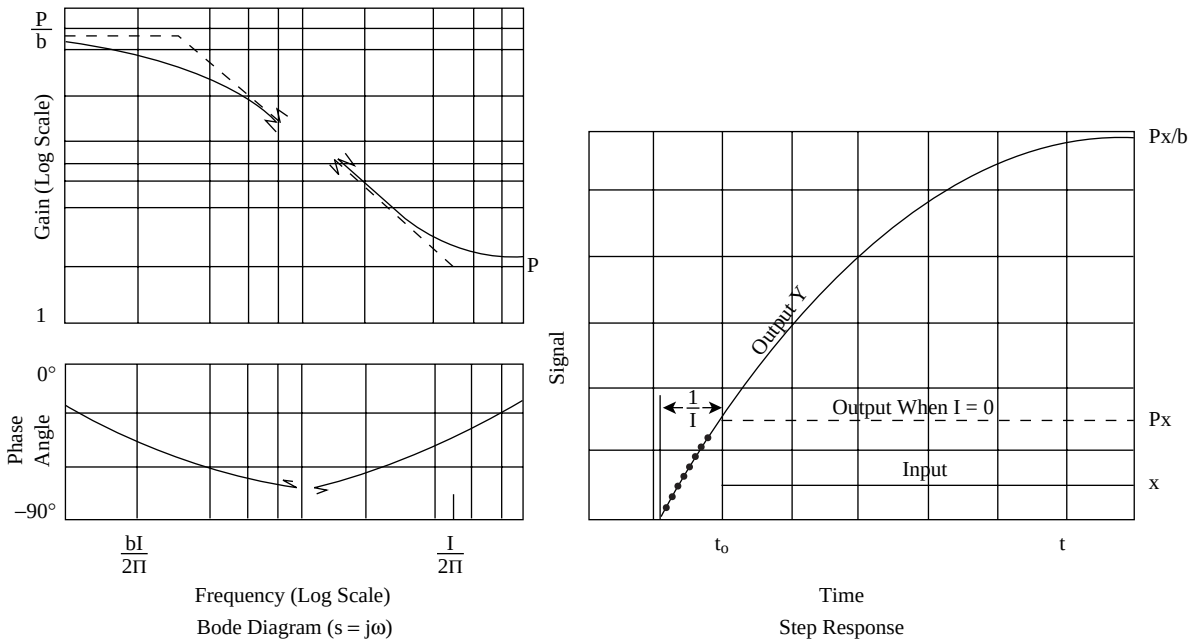

FIG. 1.3h
Proportional plus integral control action.

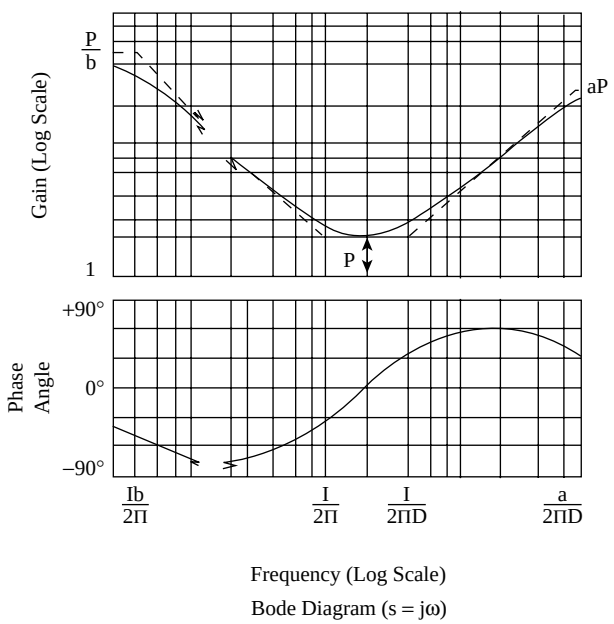

FIG. 1.3i
Proportional plus integral plus derivative control action.

Control, adaptive. Control in which automatic means are used to change the type or influence (or both) of control *parameters* in such a way as to improve the performance of the *control system.* (8, Ref. 4, "control system, adaptive")

Control, cascade. Control in which the output of one *controller* is the *setpoint* for another *controller.* (Ref. 8, "control action, cascade")

Control center. An equipment structure, or group of structures, from which a *process* is measured, controlled, and/or monitored. (Ref. 12)

Control, differential gap. Control in which the output of a *controller* remains at a maximum or minimum value until the controlled variable crosses a band or gap, causing the output to reverse. The controlled variable must then cross the gap in the opposite direction before the output is restored to its original condition.

Control, direct digital. Control performed by a digital *device* that establishes the *signal* to the *final controlling element. Note:* Examples of possible digital (D) and analog (A) combinations for this definition are (Ref. 8, "control action, direct digital") as follows:

	Feedback Elements	*Controller*	*Final Controlling Element*
1.	D	D	D
2.	A	D	D
3.	A	D	A
4.	D	D	A

Control, feedback. Control in which a *measured variable* is compared to its *desired value* to produce an *actuating error signal* that is acted upon in such a way as to reduce the magnitude of the *error.* (Ref. 8, "control action, feedback")

Control, feedforward. Control in which information concerning one or more conditions that can disturb the conrolled variable is converted, outside of any feedback

© 2003 by Béla Lipták

loop, into corrective action to minimize *deviations* of the controlled variable. *Note:* The use of feedforward control does not change system stability, because it is not part of the feedback loop, which determines the stability characteristics. See Figures 1.3j and 1.3k. (Ref. 8, "control action, feedforward")

Control, high limiting. Control in which the output *signal* is prevented from exceeding a predetermined high limiting value. (Ref. 8 "control action, high limiting")

Controlled system. See *system, controlled.*

Controller. A *device* that operates automatically to regulate a controlled variable. *Note:* This term is adequate for the *process* industries in which the word "controller" always means "automatic controller." In some industries, "automatic" may not be implied,

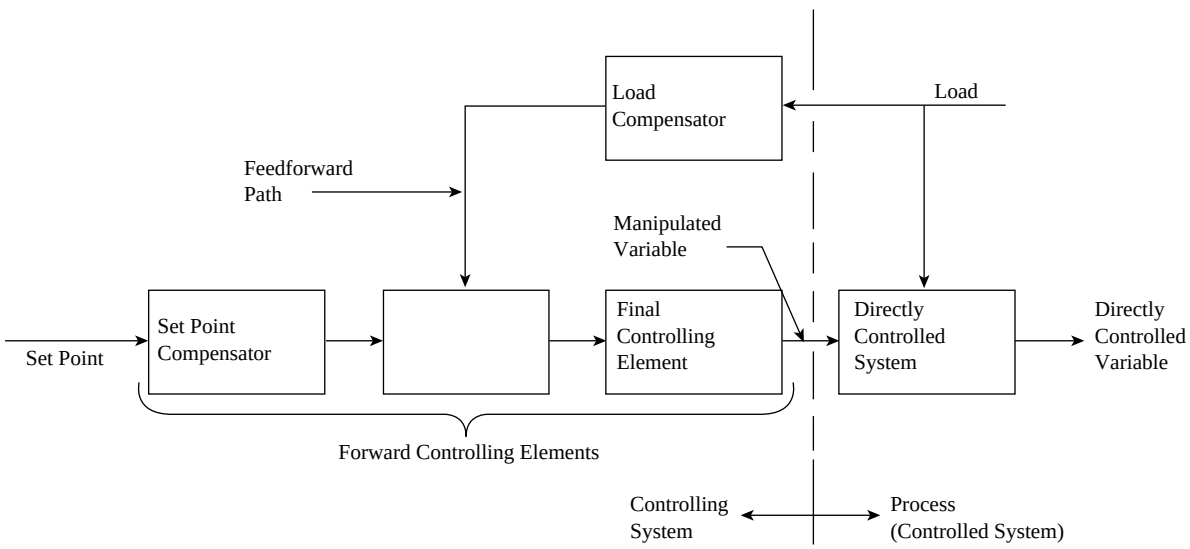

FIG. 1.3j
Feedforward control without feedback.

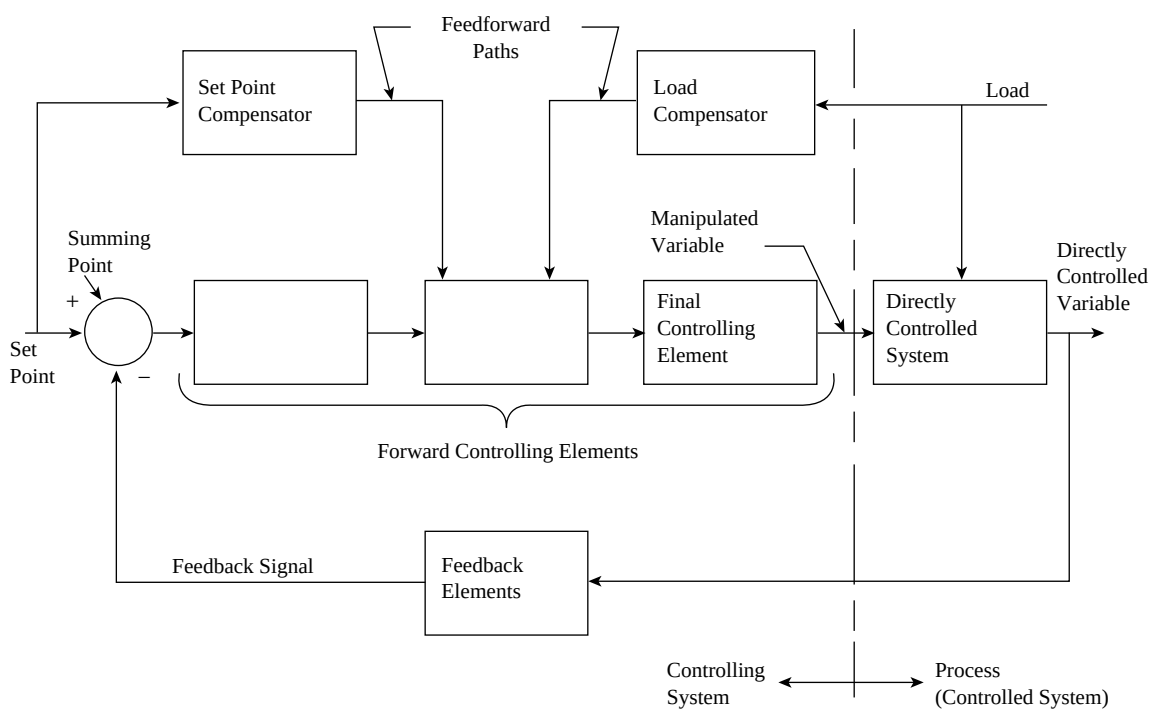

FIG. 1.3k
Feedforward control with feedback.

© 2003 by Béla Lipták

and the term "automatic controller" is preferred. (8, Ref. 4, "automatic controller")

Controller, derivative (d). A *controller* that produces *derivative control action* only.

Controller, direct acting. A *controller* in which the value of the *output signal* increases as the value of the input (*measured variable)* increases. See *controller, reverse acting.* (Ref. 8)

Controller, floating. A *controller* in which the rate of change of the output is a continuous (or at least a piecewise continuous) function of the *actuating error signal*. *Note:* The output of the *controller* may remain at any value in its operating *range* when the *actuating error signal* is zero and constant. Hence, the output is said to *float*. When the *controller* has *integral control action* only, the mode of control has been called *proportional speed floating*. The use of the term *integral control action* is recommended as a replacement for "proportional speed floating control." (8)

Controller, integral (reset) (i). A controller that produces *integral control action* only. *Note:* It may also be referred to as "controller, proportional speed floating." (8)

Controller, multiple-speed floating. A *floating controller* in which the output may change at two or more rates, each corresponding to a definite range of values of the *actuating error signal.* (8, Ref. 4, "control system, multiple-speed floating")

Controller, multiposition. A *controller* having two or more discrete values of output. See Figure 1.3l. (8)

Controller, on–off. A *two-position controller* of which one of the two discrete values is zero. See Figures 1.3n and 1.3o. (Ref. 8)

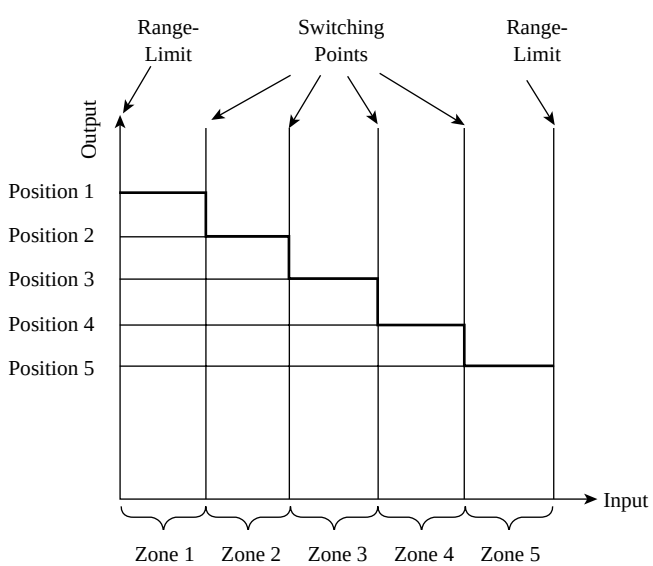

FIG. 1.3l
Multi-position controller.

Controller, program. A *controller* that automatically holds or changes *setpoint* to follow a prescribed program for a *process.*

Controller, proportional (p). A *controller* that produces *proportional control action* only. (8)

Controller, proportional plus derivative (rate) (pd). A *controller* that produces *proportional plus derivative (rate) control action.* (8)

Controller, proportional plus integral (reset) (pi). A *controller* that produces *proportional plus integral (reset) control action.* (8)

Controller, proportional plus integral (reset) plus derivative (rate) (pid). A *controller* that produces *proportional plus integral (reset) plus derivative (rate) control action.* (8)

Controller, proportional speed floating. See *controller, integral (reset) (I).* (8)

Controller, ratio. A *controller* that maintains a predetermined ratio between two variables. (Ref. 4, "control system, ratio," Ref. 8)

Controller, reverse acting. A *controller* in which the value of the *output signal* decreases as the value of the input *(measured variable)* increases. See *controller, direct acting.* (Ref. 8)

Controller, sampling. A *controller* using intermittently observed values of a *signal* such as the *setpoint* signal, the *actuating error signal*, or the *signal* representing the controlled variable to effect *control action.* (8, Ref. 4, "control system, sampling")

Controller, self-operated (regulator). A *controller* in which all the energy to operate the *final controlling element* is derived from the *controlled system.* (Ref. 4, Ref. 8)

Controller, single-speed floating. A floating controller in which the output changes at a fixed rate, increasing or decreasing depending on the sign of the *actuating error signal.* See *controller, floating. Note:* A neutral zone of values of the *actuating error signal* in which no action occurs may be used. (Ref. 4, "control system, single speed floating." Ref. 8)

Controller, three-position. A *multiposition controller* having three discrete values of output. See Figure 1.3m. *Note:* This is commonly achieved by selectively energizing a multiplicity of circuits (outputs) to establish three discrete positions of the *final controlling element.* (Ref. 8)

Controller, time schedule. A *controller* in which the *setpoint* or the *reference-input signal* automatically adheres to a predetermined time schedule. (8. Ref. 4)

Controller, two position. A *multiposition controller* having two discrete values of output. (Also called a switch.) See Figures 1.3n and 1.3o. (8)

Controlling system. See *system, controlling.*

Control, low limiting. Control in which output *signal* is prevented from decreasing beyond a predetermined

© 2003 by Béla Lipták

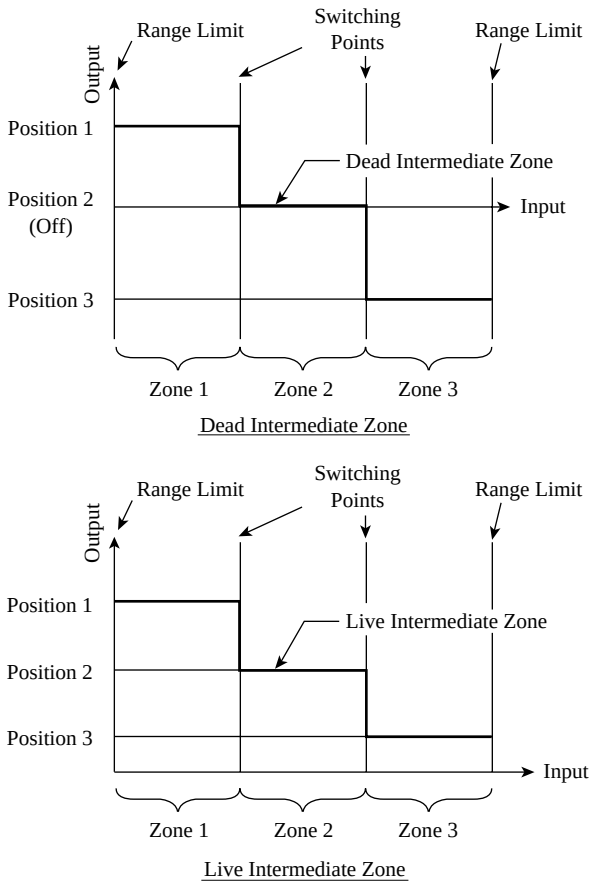

FIG. 1.3m
Three-position controller.

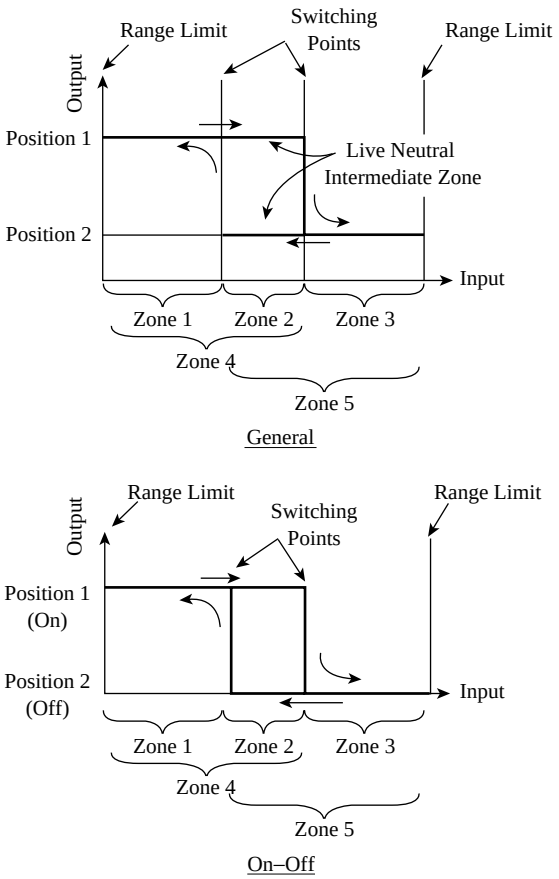

FIG. 1.3o
Two-position controller with neutral intermediate zone.

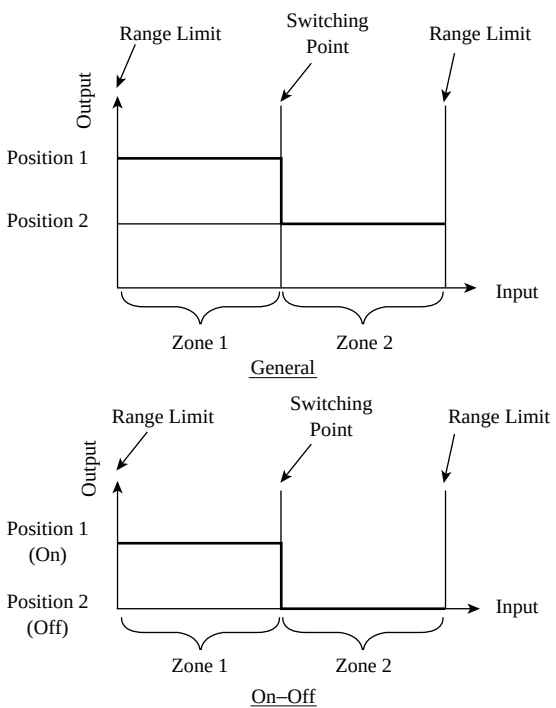

FIG. 1.3n
Two-position controller.

low limiting value. (Ref. 8, "control action, low limiting")

Control mode. A specific type of *control action* such as *proportional*, *integral*, or *derivative*. (8)

Control, optimizing. Control that automatically seeks and maintains the most advantageous value of a specified variable rather than maintaining it at one set value. (Ref. 4, "control action, optimizing")

Control room area. See *area, control room.*

Control, shared time. Control in which one *controller* divides its computation or control time among several control loops rather than by acting on all loops simultaneously. (Ref. 4, "control action, shared time")

Control, supervisory. Control in which the control loops operate independently subject to intermittent corrective action, e.g., *setpoint* changes from an external source. (Ref. 4,"control action supervisory")

Control system. A system in which deliberate guidance or manipulation is used to achieve a prescribed value of a variable. See Figure 1.3p. *Note:* It is subdivided into a *controlling system* and a *controlled system*. (4, 8)

Control system, automatic. A *control system* that operates without human intervention. (4) See also *control system.*

© 2003 by Béla Lipták

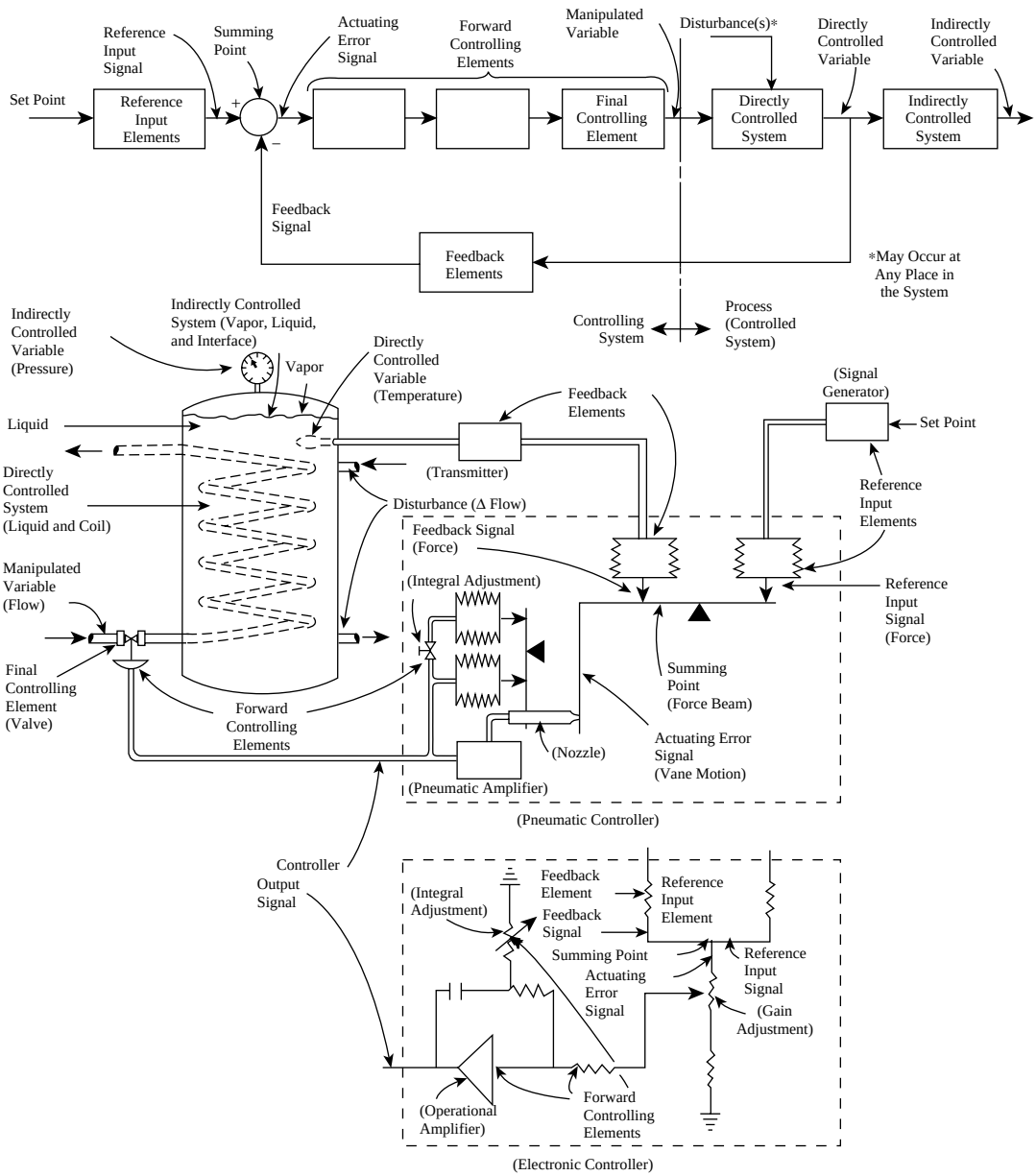

FIG. 1.3p
Control system diagrams.

Control system, multi-element (multivariable). A *control system* utilizing *input signals* derived from two or more *process* variables for the purpose of jointly affecting the action of the *control system. Note 1:* Examples are *input signals* representing pressure and temperature, or speed and flow, or other conditions. (Ref. 8) *Note 2:* A term used primarily in the power industry.

Control system, noninteracting. A *control system* with multiple inputs and outputs in which any given input–output pair is operating independently of any other input–output pair.

Control, time proportioning. Control in which the output *signal* consists of periodic pulses whose duration is varied to relate, in some prescribed manner, the time average of the output to the *actuating error signal.* (Ref. 4, "controller, time proportioning")

Control valve. A *final controlling element,* through which a fluid passes, which adjusts the size of flow passage as directed by a *signal* from a *controller* to modify the rate of flow of the fluid. (Ref. 17, "value")

Control, velocity limiting. Control in which the rate of change of a specified variable is prevented from exceeding a predetermined limit. (Ref. 8, "control action, velocity limiting")

Corner frequency. In the asymptotic form of *Bode diagram,* that frequency indicated by a *break point,* i.e.,

© 2003 by Béla Lipták

the junction of two confluent straight lines asymptotic to the log *gain* curve. (4)

Correction. In process instrumentation, the algebraic difference between the *ideal value* and the indication of the *measured signal.* It is the quantity that, added algebraically to the indication, gives the *ideal value.*

$$\text{(correction = ideal value − indication).} \qquad \textbf{1.3(5)}$$

See *error.* (Ref. 4, Ref. 8) *Note:* A positive correction denotes that the indication of the instrument is less than the *ideal value.*

Correction time. See *time, settling.*

Cycling life. The specified minimum number of full-scale excursions or specified partial *range* excursions over which a *device* will operate as specified without changing its performance beyond specified tolerances. (Ref. 11)

Damped frequency. See *frequency, damped.*

Damping. (1) (noun) The progressive reduction or suppression of oscillation in a *device* or system. (2) (adjective) Pertaining to or productive of damping. *Note 1:* The response to an abrupt stimulus is said to be "critically damped" when the *time response* is as fast as possible without overshoot, "underdamped" when overshoot occurs, or "overdamped" when response is slower than critical. *Note 2:* Viscous damping uses the viscosity of fluids (liquids or gases) to effect damping. *Note 3:* Magnetic damping uses the current induced in electrical conductors by changes in magnetic flux to effect damping. (Ref. 4, Ref. 8, Ref. 11)

Damping factor. For the free oscillation of a second-order *linear system,* a measure of *damping,* expressed (without sign) as the quotient of the greater by the lesser of a pair of consecutive swings of the output (in opposite directions) about an ultimate *steady-state* value. See Figure 1.3q. (8, Ref. 4)

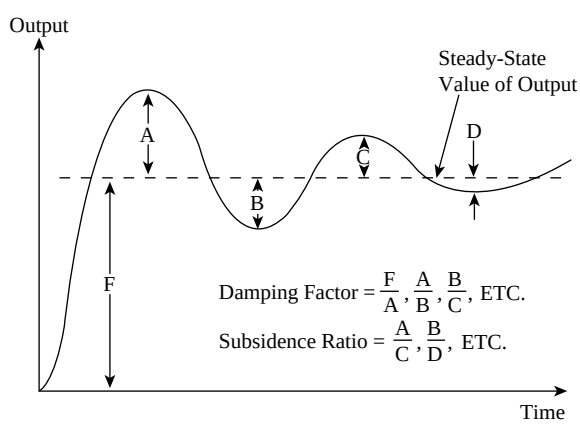

FIG. 1.3q
Underdamped response of system with second-order lag.

Damping ratio. For a *linear system* of the second order described by the differential equation

$$\frac{d^2x}{dt^2} + 2\zeta\omega_0\frac{dx}{dt} + \omega_0^2 = 0 \qquad \textbf{1.3(6)}$$

The damping ratio is the value of the factor ζ. *Note:* ω_0 is called the angular *resonance* frequency of the system. (17)

Damping, relative. For an underdamped system, a number expressing the quotient of the actual *damping* of a second-order *linear system* or *element* by its critical *damping. Note:* For any system whose transfer function includes a quadratic factor $s^2 + 2\zeta\omega_n s + \omega_n^2$, relative damping is the value of ζ, since $\zeta = 1$ for critical damping. Such a factor has a root $-\sigma + j\omega$ in the complex s-plane, from which $\zeta = \sigma/\omega_n = \sigma/(0^2 + \omega^2)^{1/2}$.

D controller. See *controller, derivative (D).*

Dead band. In process instrumentation, the range through which an input signal may reverse direction without initiating observable change in output signal. (See Figure 1.3r. Ref. 8) *Note 1:* There are separate and distinct input–output relationships for increasing and decreasing signals as shown in Figure 1.3r(b). *Note 2:* Dead band produces phase lag between input and output. *Note 3:* Dead band is usually expressed in percent of *span.* (Ref. 4, Ref. 8) See *zone, dead* and *test procedure.*

Dead time. See *time, dead.*

Dead zone. See *zone, dead.*

Delay. The interval of time between a changing *signal* and its repetition for some specified duration at a downstream point of the *signal* path; the value L in the transform factor $\exp(-Ls)$. See *time, dead.* (4)

Derivative action gain. See *gain, derivative action (rate gain).*

Derivative action time. See *time, derivative action.*

Derivative action time constant. See *time constant, derivative action.*

Derivative control. See *control action, derivative (D).*

Derivative control action. See *control action, derivative.*

Derivative controller. See *controller, derivative.*

Design pressure. See *pressure, design.*

Desired value. See *value, desired.*

Detector. See *transducer.* (11)

Deviation. Any departure from a *desired value* or expected value or pattern. (4, 8)

Deviation, steady-state. The *system deviation* after *transients* have expired. (4, 8) See also *offset.*

Deviation, system. The instantaneous value of the *directly controlled variable* minus the *setpoint.* (8, Ref. 4) See also *signal, actuating error.*

Deviation, transient. The instantaneous value of the *directly controlled variable* minus its *steady-state* value. (Ref. 4)

© 2003 by Béla Lipták

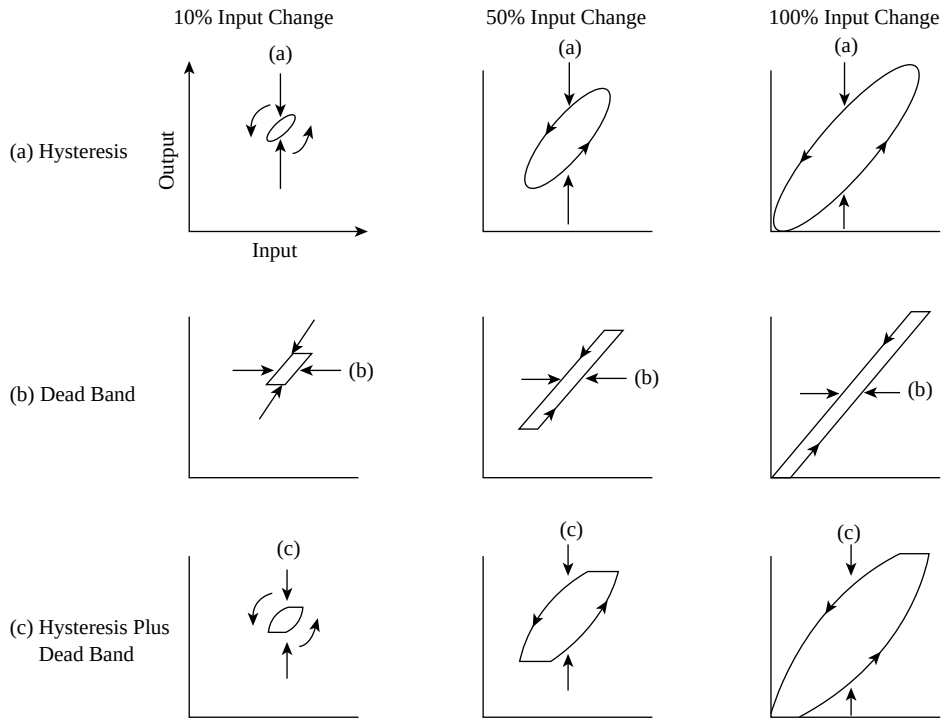

FIG. 1.3r
Hysteresis and dead band.

Device. An apparatus for performing a prescribed function. (8)

Differential gap control. See *control, differential gap.*

Differential-mode interference. See *interference, normal-mode.* (2, 8)

Digital signal. See *signal, digital.*

Direct acting controller. See *controller, direct acting.*

Direct digital control. See *control, direct digital.*

Directly controlled system. See *system, directly controlled.*

Directly controlled variable. See *variable, directly controlled.*

Distance/velocity lag. A delay attributable to the transport of material or to the finite rate of propagation of a *signal.* (Ref. 4, Ref. 17)

Disturbance. An undesired change that takes place in a *process* and that tends to affect adversely the value of a controlled variable. (8, Ref. 4)

Dither. A useful oscillation of small magnitude, introduced to overcome the effect of friction, *hysteresis,* or recorder pen clogging. See also *hunting.* (Ref. 4)

Drift. An undesired change in output over a period of time, the change being unrelated to the input, environment, or load. (4)

Drift, point. The change in output over a specified period of time for a constant input under specified *reference operating conditions. Note:* Point drift is frequently determined at more than one input, as, for example, at 0, 50, and 100% of *range.* Thus, any *drift* of zero or *span* may be calculated. Typical expression of drift: The *drift* at mid-scale for *ambient temperature* (70 ± 2°F) for a period of 48 h was within 0.1% of output *span.* (8) See *test procedure.*

Droop. See *offset.*

Dynamic gain. See *gain, dynamic.*

Dynamic response. See *response, dynamic.*

Electromagnetic interference. See *interference, electromagnetic.*

Electrostatic field interference. See *interference, electromagnetic.*

Element. A component of a device or system. (8)

Element, final controlling. The *forward controlling element* that directly changes the value of the *manipulated variable.* (8, Ref. 4, "controlling element, final")

Element, primary. The system *element* that quantitatively converts the *measured variable* energy into a form suitable for measurement. *Note:* For *transmitters* not used with external primary elements, the sensing portion is the primary element. (Ref. 2, "detecting means," Ref. 8)

Element, reference-input. The portion of the *controlling system* that changes the *reference-input signal* in response to the *setpoint.* See Figure 1.3p. (8, Ref. 4)

Element, sensing. The *element* directly responsive to the value of the *measured variable. Note:* It may include the case protecting the sensitive portion. (Ref. 8)

Elements, feedback. Those *elements* in the *controlling system* that act to change the *feedback signal* in response

© 2003 by Béla Lipták

to the *directly controlled variable.* See Figure 1.3p. (Ref. 4, Ref. 8)

Elements, forward controlling. Those *elements* in the *controlling system* that act to change a variable in response to the *actuating error signal.* See Figure 1.3p. (Ref. 4, Ref. 8)

Elevated range. See *range, suppressed-zero.* (4, Ref. 1, "Range, suppressed-zero")

Elevated span. See *range, suppressed-zero.*

Elevated-zero range. See *range, elevated-zero.*

Elevation. See range, *suppressed-zero.*

Environmental area. See *area, environmental.*

Environmental influence. See *operating influence.*

Error. In process instrumentation, the algebraic difference between the indication and the *ideal value* of the *measured signal.* It is the quantity that, algebraically subtracted from the indication, gives the *ideal value*. *Note:* A positive error denotes that the indication of the instrument is greater than the *ideal value.* See *correction.* (Ref. 2, Ref. 8)

$$\text{error} = \text{indication} - \textit{ideal value} \qquad \textbf{1.3(7)}$$

Error curve. See *calibration curve*.

Error, environmental. Error caused by a change in a specified *operating condition* from *reference operating condition.* See *operating influence.* (Ref. 8, "operating influence")

Error, frictional. Error of a *device* due to the resistance to motion presented by contacting surfaces.

Error, hysteresis. See *hysteresis.*

Error, hysteretic. See *hysteresis*.

Error, inclination. The change in output caused solely by an inclination of the *device* from its normal operating position. (Ref. 1, "influence, position")

Error, mounting strain. Error resulting from mechanical deformation of an instrument caused by mounting the instrument and making all connections. See also *error, inclination.*

Error, position. The change in output resulting from mounting or setting an instrument in a position different from the position at which it was *calibrated*. See also *error, inclination.*

Error signal. See *signal, error.*

Error, span. The difference between the actual *span* and the ideal *span*. *Note:* It is usually expressed as a percentage of ideal *span*. (8)

Error, systematic. An *error* that, in the course of a number of measurements made under the same conditions of the same value of a given quantity, either remains constant in absolute value and sign or varies according to a definite law when the conditions change.

Error, zero. In process instrumentation, the *error* of a *device* operating under specified conditions of use, when the input is at the *lower range value*. (Ref. 8) *Note:* It is usually expressed as percent of ideal *span*.

Excitation. The external supply applied to a *device* for its proper operation. *Note:* It is usually expressed as a range of supply values. See also *excitation, maximum.* (Ref. 11)

Excitation, maximum. The maximum value of excitation *parameter* that can be applied to a *device* at rated *operating conditions* without causing damage or performance degradation beyond specified tolerances. (Ref. 11)

Feedback control. See *control, feedback.*

Feedback elements. See *elements, feedback.*

Feedback loop. See *loop, closed (feedback loop).*

Feedback signal. See *signal, feedback.*

Feedforward control. See *control, feedforward.*

Final controlling element. See *element, final controlling.*

Floating control action. See *control action, floating.*

Floating controller. See *controller, floating.*

Flowmeter. A *device* that measures the rate of flow or quantity of a moving fluid in an open or closed conduit. It usually consists of both a primary and a secondary device. *Note:* It is acceptable, in practice, to further identify the flowmeter by its applied theory (such as differential pressure, velocity, area, force, and so forth) or by its applied technology (such as orifice, turbine, vorex, ultrasonic, and so on). Examples include turbine flowmeter, magnetic flowmeter, and the fluidic pressure flowmeter.

Flowmeter primary device. The *device* mounted internally or externally to the fluid conduit that produces a signal with a defined relationship to the fluid flow in accordance with known physical laws relating the interaction of the fluid to the presence of the primary *device*. *Note:* The primary device may consist of one or more *elements* required to produce the primary device *signal*.

Flowmeter secondary device. The *device* that responds to the *signal* from the primary *device* and converts it to a display or to an output signal that can be translated relative to flow rate or quantity. *Note:* The secondary *device* may consist of one or more *elements* as needed to translate the primary device *signal* into standardized or nonstandardized display or transmitted units.

Forward controlling elements. See *elements, forward controlling.*

Frequency, damped. The apparent frequency of a damped oscillatory *time response* of a system resulting from a nonoscillatory stimulus. (4)

Frequency, gain crossover. (1) On a *Bode diagram* if the *transfer function* of an *element* or system, the frequency at which the *gain* becomes unity and its decibel value zero. (2) Of *integral control action*, the frequency at which the *gain* becomes unity. See Figure 1.3f. (4)

Frequency, phase crossover. Of a *loop transfer function*, the frequency at which the phase angle reaches ±180°. (Ref. 4)

© 2003 by Béla Lipták

Frequency response characteristic. In process instrumentations, the frequency-dependent relation, in both amplitude and phase, between *steady-state* sinusoidal inputs and the resulting fundamental sinusoidal outputs. *Note:* Frequency response is commonly plotted on a *Bode diagram*. See Figure 1.3b. (8, Ref. 4, "frequency-response characteristics")

Frequency, undamped (frequency, natural). (1) Of a second-order *linear system* without damping, the frequency of free oscillation in radians or cycles per unit of time. (2) Of any system whose *transfer function* contains the quadratic factor $s^2 + 2z\omega_n s + \omega_n^2$ the value ω_n, where

s = complex variable
z = constant
ω_n = natural frequency in radians per second

(3) Of a *closed-loop control system* or *controlled system*, a frequency at which continuous oscillation (*hunting*) can occur without periodic stimuli. *Note:* In *linear systems*, the undamped frequency is the phase crossover frequency. With *proportional control action* only, the undamped frequency of a *linear system* may be obtained, in most cases, by raising the *proportional* gain until continuous oscillation occurs. (Ref. 4, Ref. 8)

Frictional error. See *error, frictional.*

Gain, closed loop. In process instrumentation, the *gain* of a *closed loop* system, expressed as the ratio of the output change to the input change at a specified frequency. (8, Ref. 4)

Gain, crossover frequency. See *frequency, gain crossover.*

Gain, derivative action (rate gain). The ratio of maximum *gain* resulting from *proportional plus derivative control action* to the *gain* due to *proportional control action* alone. See Figures 1.3g and 1.3i. (4, 8)

Gain, dynamic. The magnitude ratio of the *steady-state* amplitude of the *output signal* from an *element* or system to the amplitude of the *input signal* to that *element* or system, for a sinusoidal *signal*. (8)

Gain, loop. In process instrumentation, the ratio of the absolute magnitude of the change in the *feedback signal* to the change in its corresponding *error signal* at a specified frequency. *Note:* The *gain* of the loop *elements* is frequently measured by opening the loop, with appropriate termination. The *gain* so measured is often called the "open loop gain." (8, Ref. 5)

Gain (magnitude ratio). For a *linear system* or *element*, the ratio of the magnitude (amplitude) of a *steady-state* sinusoidal output relative to the causal input; the length of a phasor from the origin to a point of the transfer locus in a complex plane. *Note:* The quantity may be separated into two factors: (1) a proportional amplification, often denoted K, which is frequency independent and associated with a dimensioned scale factor relating to the units of input and output; (2) a dimensionless factor, often denoted $G(j\omega)$, which is frequency dependent. Frequency, conditions of operation, and conditions of measurement must be specified. A *loop gain characteristic* is a plot of log gain vs. log frequency. In nonlinear systems, gains are often amplitude-dependent. (4, 8)

Gain, open loop. See *gain, loop.*

Gain, proportional. The ratio of the change in output due to *proportional control action* to the change in input. See *proportional band.* (4, 8)

Illustration: $Y = \pm PX$

where

P = proportional gain
X = input transform
Y = output transform

Gain, static (zero-frequency gain). If *gain* of an *element*, or *loop gain* of a system, the value approached as a limit as frequency approaches zero. *Note:* Its value is the ratio of change of *steady-state* output to a step change in input, provided the output does not saturate. (4, Ref. 8)

Gain, zero frequency. See *gain, static (zero-frequency gain).*

Hardware. Physical equipment directly involved in performing industrial *process* measuring and controlling functions.

Hazardous (classified) location. See *location, hazardous (classified).*

High limiting control. See *control, high limiting.*

Hunting. An undesirable oscillation of appreciable magnitude, prolonged after external stimuli disappear. *Note:* In a *linear system*, hunting is evidence of operation at or near the stability limit; nonlinearities may cause hunting of well-defined amplitude and frequency. See also *dither.* (4)

Hysteresis. That property of an *element* evidenced by the dependence of the value of the output, for a given excursion of the input, on the history of prior excursions and the direction of the current traverse. *Note 1:* It is usually determined by subtracting the value of the *dead band* from the maximum measured separation between upscale going and downscale going indications of the *measured variable* (during a full *range* traverse, unless otherwise specified) after *transients* have decayed. This measurement is sometimes called "hysteresis error" or "hysteretic error." See Figure 1.3r. *Note 2:* Some reversal of output may be expected for any small reversal of input; this distinguishes hysteresis from *dead band*. See *test procedure*.

I controller. See *controller, integral (reset) (I).*

© 2003 by Béla Lipták

Idealized system. See *system, idealized.*

Ideal value. See *value, ideal.*

Impedance, input. Impedance presented by a *device* to the source. (3, 8)

Impedance, load. Impedance presented to the output of a *device* by the load. (8, Ref. 3)

Impedance, output. Impedance presented by a *device* to the load. (8, Ref. 3)

Impedance, source. Impedance presented to the input of a *device* by the source. (8, Ref. 3)

Inclination error. See *error, inclination.*

Independent conformity. See *conformity, independent.*

Independent linearity. See *linearity, independent.*

Indicating instrument. See *instrument, indicating.*

Indicator travel. The length of the path described by the indicating means or the tip of the pointer in moving from one end of the scale to the other. *Note 1:* The path may be an arc or a straight line. *Note 2:* In the case of knife-edge pointers and others extending beyond the scale division marks, the pointer shall be considered as ending at the outer end of the shortest scale division marks. (2, 8)

Indirectly controlled system. See *system, indirectly controlled.*

Indirectly controlled variable. See *variable, indirectly controlled.*

Inherent regulation. See *self-regulation.*

Input impedance. See *impedance, input.*

Input signal. See *signal, input.*

Instrumentation. A collection of instruments or their application for the purpose of observation, measurement, or control.

Instrument, computing. A *device* in which the output is related to the input or inputs by a mathematical function such as addition, averaging, division, integration, lead/lag, signal limiting, squaring, square root extraction, or subtraction.

Instrument, indicating. A *measuring instrument* in which only the present value of the *measured variable* is visually indicated. (Ref. 8)

Instrument, measuring. A *device* for ascertaining the magnitude of a quantity or condition presented to it. (Ref. 8)

Instrument, recording. A *measuring instrument* in which the values of the *measured variable* are recorded. *Note:* The record may be either analog or digital and may or may not be visually indicated. (Ref. 8)

Insulation resistance. The resistance measured between specified insulated portions of a *device* when a specified direct current voltage is applied, at *reference operating conditions* unless otherwise stated. *Note:* The objective is to determine whether the leakage current would be excessive under *operating conditions*. (Ref. 11)

Insulation voltage breakdown. The voltage at which a disruptive discharge takes place through or over the surface of the insulation. (3)

Integral action limiter. A *device* that limits the value of the *output signal* due to *integral control action* to a predetermined value. (8)

Integral action rate (reset rate). (1) Of *proportional plus integral* or *proportional plus integral plus derivative control action devices;* for a step input, the ratio of the initial rate of change of output due to *integral control action* to the change in *steady-state* output due to *proportional control action. Note: Integral action rate is often expressed as the number of repeats per minute, because it is equal to the number of times per minute that the proportional response to a step input is repeated by the initial integral response*.

(2) Of integral control action devices; for a step input, the ratio of the initial rate of change of output to the input change. (8, Ref. 4)

Integral action time constant. See *time constant, integral action.*

Integral control action. See *control action, integral.*

Integral controller. See *controller, integral (reset).*

Interference, common-mode. A form of interference that appears between measuring circuit terminals and ground. (3, 8)

Interference, differential-mode. See *interference, normal-mode.*

Interference, electromagnetic. Any spurious effect produced in the circuits or *elements* of a *device* by external electromagnetic fields. *Note:* A special case of interference from radio transmitters is known as "radio frequency interference (RFI)."

Interference, electrostatic field. See *interference, electromagnetic.*

Interference, longitudinal. See *interference, common-mode.*

Interference, magnetic field. See *interference, electromagnetic.*

Interference, normal-mode. A form of interference that appears between measuring circuit terminals. (2, 8)

Interference, transverse. See *interference, normal-mode.*

Intermediate zone. See *zone, intermediate.*

Intrinsically safe equipment and wiring. Equipment and wiring that are incapable of releasing sufficient electrical or thermal energy under normal or abnormal conditions to cause ignition of a specific hazardous atmospheric mixture in its most easily ignited concentration. (14)

Laplace transform, unilateral. Of a function $f(t)$, the quantity obtained by performing the operation

$$F(s) = \int_{\sigma}^{\infty} F(t)e^{-st}dt \qquad \textbf{1.3(8)}$$

© 2003 by Béla Lipták

where
$F(s)$ = function of s
s = complex variable, $\sigma + j\omega$
$f(t)$ = function of t
t = time, seconds
σ = real part of the complex variable s
$j = \sqrt{-1}$
ω = angular velocity, radians per second (8, Ref. 4)

Leak pressure. See *pressure, leak.*

Linear system. See *system, linear.*

Linearity. The closeness to which a curve approximates a straight line. *Note 1:* It is usually measured as a nonlinearity and expressed as linearity; e.g., a maximum *deviation* between an average curve and a straight line. The average curve is determined after making two or more full *range* traverses in each direction. The value of linearity is referred to the output unless otherwise stated. *Note 2:* As a performance specification, linearity should be expressed as *independent linearity, terminal based linearity,* or *zero-based linearity.* When expressed simply as linearity, it is assumed to be *independent linearity.* See *conformity.* (8, Ref. 4, "Linearity of signal")

Linearity, independent. The maximum *deviation* of the *calibration curve* (average of upscale and downscale readings) from a straight line positioned so as to minimize the maximum *deviation.* See Figure 1.3s. See *test procedure.* (Ref. 8)

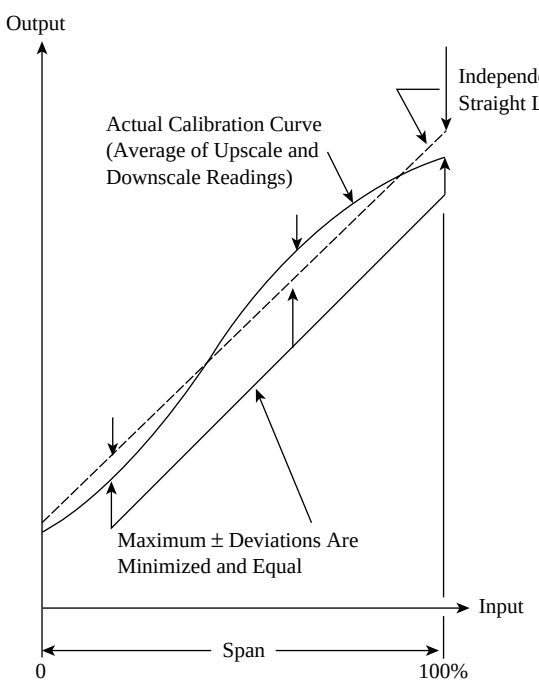

FIG. 1.3s
Independent linearity.

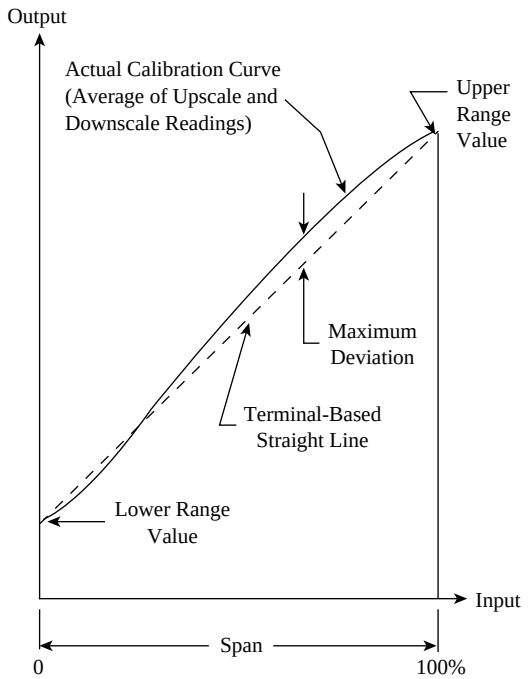

FIG. 1.3t
Terminal-based linearity.

Linearity, terminal-based. The maximum *deviation* of the *calibration curve* (average of upscale and downscale readings) from a straight line coinciding with the *calibration curve* at the *upper* and *lower range values.* See Figure 1.3t. See *test procedure.* (Ref. 8)

Linearity, zero-based. The maximum *deviation* of the *calibration curve* (average of upscale and downscale readings) from a straight line positioned so as to coincide with the *calibration curve* at the *lower range value* and to minimize the maximum *deviation.* See Figure 1.3u. See *test procedure.* (Ref. 8)

Live zone. See *zone, live.*

Load impedance. See *impedance, load.*

Load regulation. The change in output (usually speed or voltage) from no-load to full-load (or other specified load limits) conditions. See *offset.* *Note:* It may be expressed as the percentage ratio of the change from no-load to full-load conditions divided by the no-load value. (8)

Location, hazardous (classified). That portion of a plant where flammable or combustible liquids, vapors, gases, or dusts may be present in the air in quantities sufficient to produce explosive or ignitable mixtures. (Ref. 9)

Longitudinal interference. See *interference, common-mode.*

Loop, closed (feedback loop). A *signal* path that includes a forward path, a *feedback* path, and a *summing point,* and forms a closed circuit. (4, 8)

Loop, feedback. See *loop, closed (feedback loop).* (4, 8)

Loop gain. See *gain, loop.*

© 2003 by Béla Lipták

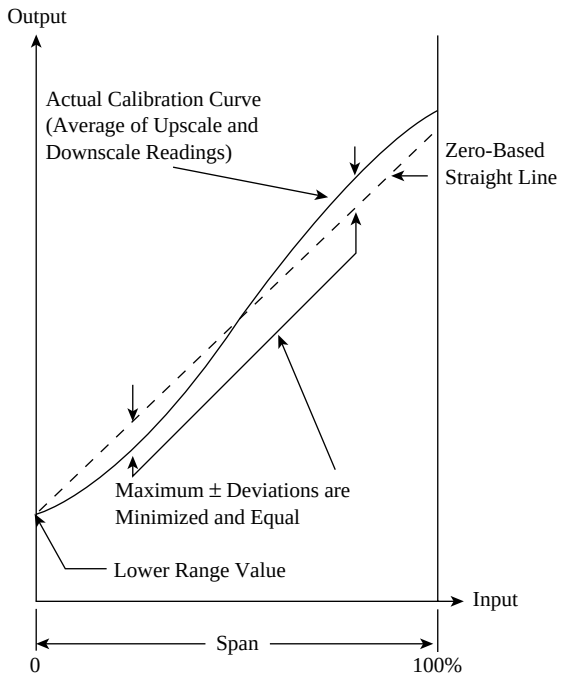

FIG. 1.3u
Zero-based linearity.

Loop gain characteristics. In process control, of a *closed loop*, *the characteristic curve* of the ratio of the change in the *return signal* to the change in the corresponding *error signal* for all real frequencies. (8)

Loop, open. A *signal* path without *feedback.* (4, 8)

Loop transfer function. Of a *closed loop*, the *transfer function* obtained by taking the ratio of the *Laplace transform* of the *return signal* to the *Laplace transform* of its corresponding *error signal*. (4, 8)

Lower range limit. See *range limit, lower.*

Lower range value. See *range value, lower.*

Low limiting control. See *control, low limiting.*

Magnetic field interference. See *interference, electromagnetic.*

Magnitude ratio. See *gain (magnitude ratio).*

Manipulated variable. See *variable, manipulated.*

Maximum excitation. See *excitation, maximum.*

Maximum working pressure. See *pressure, maximum working (MWP).*

Measurand. See *variable, measured.*

Measured accuracy. See *accuracy, measured.*

Measured signal. See *signal, measured.*

Measured value. See *value, measured.*

Measured variable. See *variable, measured.*

Measuring instrument. See *instrument, measuring.*

Mechanical shock. The momentary application of an acceleration force to a device. *Note:* It is usually expressed in units of acceleration of gravity (g). (Ref. 8)

Modulation. The process, or result of the process, whereby some characteristic of one wave is varied in accordance with some characteristic of another wave. (4, 8)

Module. An assembly of interconnected components that constitutes an identifiable *device*, instrument, or piece of equipment. A module can be disconnected, removed as a unit, and replaced with a spare. It has definable performance characteristics that permit it to be tested as a unit. *Note:* A module could be a card or other subassembly of a larger *device*, provided it meets the requirements of this definition.

Mounting position. The position of a *device* relative to physical surroundings. (8)

Mounting strain error. See *error, mounting strain.*

Multi-element control system. See *control system, multi-element (multivariable).*

Multiposition controller. See *controller, multiposition.*

Multispeed floating controller. See *controller, multiple-speed floating.*

Multivariable control system. See *control system, multi-element (multivariable).*

Natural frequency. See *frequency, undamped.*

Neutral zone. See *zone, neutral.*

Noise. An unwanted component of a signal or variable. *Note:* It may be expressed in units of the output or in percentage of output span. See *interference, electromagnetic.* (Ref. 4, Ref. 8)

Nonincendive equipment. Equipment that, in its *normal operating condition*, would not ignite a specific hazardous atmosphere in its most easily ignited concentration. *Note:* The electrical circuits may include sliding or make-and-break contacts releasing insufficient energy to cause ignition. Wiring that, under normal conditions, cannot release sufficient energy to ignite a specific hazardous atmospheric mixture by opening, shorting, or grounding shall be permitted using any of the methods suitable for wiring in ordinary locations.

Noninteracting control system. See *control system, noninteracting.*

Normal-mode interference. See *interference, normal-mode.*

Normal-mode rejection. The ability of a circuit to discriminate against a *normal-mode voltage. Note:* It may be expressed as a dimensionless ratio, a scalar ratio, or in decibels as 20 times the $\log_{10}$ of that ratio.

Normal-mode voltage. See *voltage, normal-mode.*

Normal operating conditions. See *operating conditions, normal.*

Offset. The steady-state deviation when the setpoint is fixed. See also *deviation, steady-state. Note:* The offset resulting from a no-load to a full-load change (or other specified limits) is often called "droop" or "*load regulation.*" See *load regulation.* (8, Ref. 4)

On–off controller. See *controller, on–off.*

© 2003 by Béla Lipták

Operating conditions. Conditions to which a *device* is subjected, not including the variable measured by the *device.* Examples of *operating conditions* include *ambient pressure, ambient temperature,* electromagnetic fields, gravitational force, inclination, power supply variation (voltage, frequency, harmonics), radiation, *shock,* and *vibration.* Both static and dynamic variations in these conditions should be considered. (Ref. 2, Ref. 8)

Operating conditions, normal. The range of *operating conditions* within which a *device* is designed to operate and for which *operating influences* are stated. See Figure 1.3v. *Note:* In case of normally open or normally closed switches, the *normal* position is the unactuated position.

Operating conditions, reference. The range of *operating conditions* of a *device* within which *operating influences* are negligible. See Figure 1.3v. *Note 1:* The range is usually narrow. *Note 2:* They are the conditions under which reference is stated and the base from which the values of *operating influences* are determined. (8)

Operating influence. The change in a performance characteristic caused by a change in a specified *operating condition* from *reference operating condition,* all other conditions being held within the limits of *reference operating conditions. Note:* The specified *operating conditions* are usually the limits of the *normal operating conditions.*

Operating influence may be stated in either of two ways:

1. As the total change in performance characteristics from *reference operating condition* to another specified *operating condition.* Example: Voltage influence on *accuracy* may be expressed as 2% of *span* based on a change in voltage from reference value of 120 V to value of 130 V.
2. As a coefficient expressing the change in a performance characteristic corresponding to unit change of the *operating condition,* from *reference operating condition* to another specified *operating condition.* Example: Voltage influence on *accuracy* may be expressed as

$$\frac{2\% \text{ of span}}{130 \text{ V} - 120 \text{ V}} = 0.2\% \text{ of span per vol} \qquad \textbf{1.3(9)}$$

Note: If the relationship between operating influence and change in *operating condition* is linear, one coefficient will suffice. If it is nonlinear, it may be desirable to state more than one coefficient such as 0.05% per volt from 120 to 125 V, and 0.15% from 125 to 130 V. (8, Ref. 2)

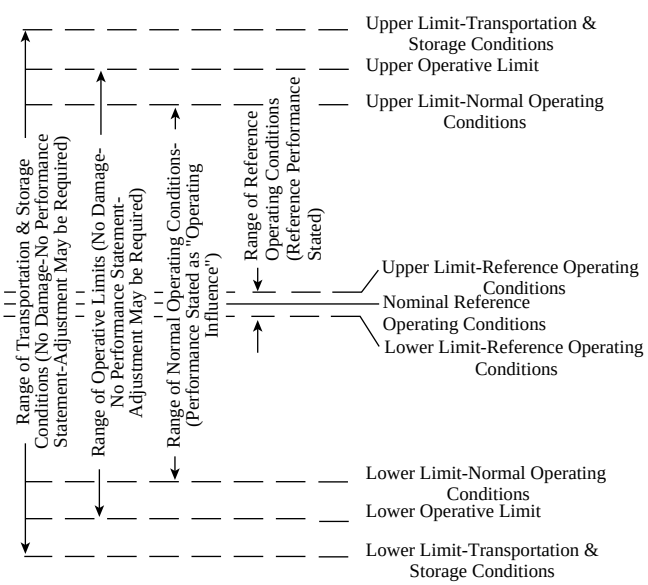

FIG. 1.3v
Diagram of operating conditions.

Operating pressure. See *pressure, operating.*

Operative limits. The range of *operating conditions* to which a *device* may be subjected without permanent impairment of operating characteristics. See Figure 1.3v. *Note 1:* In general, performance characteristics are not stated for the region between the limits of *normal operating conditions* and the operative limits. *Note 2:* Upon returning with the limits of *normal operating conditions,* a *device* may require adjustments to restore normal performance. (Ref. 2, "design limits," Ref. 8)

Optimizing control. See *control, optimizing.*

Outdoor area. See *area, outdoor.*

Output impedance. See *impedance, output.*

Output signal. See *signal, output.*

Overdamped. See *damping.*

Overrange. In process instrumentation, of a system or *element,* any excess value of the *input signal* above its *upper range value* or below its *lower range value.* (8, Ref. 4)

Overrange limit. The maximum input that can be applied to a *device* without causing damage or permanent change in performance.

Overshoot. See *transient overshoot.*

Parameter. A quantity or property that is treated as a constant but sometimes may vary or be adjusted. (6)

P controller. See *controller, proportional.*

PD controller. See *controller, proportional plus derivative.*

Pen travel. The length of the path described by the pen in moving from one end of the chart scale to the other. The path may be an arc or a straight line. (8)

Phase crossover frequency. See *frequency, phase crossover.*

Phase shift. (1) Of a *transfer function,* a change of phase angle with test frequency, as between points on a loop phase characteristic. (2) Of a *signal,* a change of phase angle with transmission. (4)

© 2003 by Béla Lipták

PI controller. See *controller, proportional plus integral.*

PID controller. See *controller, proportional plus integral plus derivative.*

Pneumatic delivery capability. The rate at which a pneumatic *device* can deliver air (or gas) relative to a specified output pressure change. *Note:* It is usually determined, at a specified level of input *signal*, by measuring the output flow rate for a specified change in output pressure. The results are expressed in cubic feet per minute (ft^3/min) or cubic meters per hour (m^3/h), corrected to standard (normal) conditions of pressure and temperature.

Pneumatic exhaust capability. The rate at which a pneumatic *device* can exhaust air (or gas) relative to a specified output pressure change. *Note:* It is usually determined, at a specified level of input *signal*, by measuring the output flow rate for a specified change in output pressure. The results are expressed in cubic feet per minute (ft^3/min) or cubic meters per hour (m^3/h), corrected to standard (normal) conditions of pressure and temperature.

Point drift. See *drift, point.*

Position. Of a *multiposition controller,* a discrete value of the *output signal*. See Figure 1.3l.

Position error. See *error, position.*

Power consumption, electrical. The maximum power used by a *device* within its operating *range* during *steady-state signal* condition. *Note 1:* For a power factor other than unity, power consumption shall be stated as maximum volt-amperes used under the above-stated condition. *Note 2:* For a *device* operating outside of its operating *range*, the maximum power might exceed what is experienced within the operating *range.* (Ref. 8, "Power consumption")

Power factor. The ratio of total watts to the total root-mean-square (rms) volt-amperes.

$$F_p = \frac{\Sigma \text{ watts per phase}}{\Sigma \text{ rms volt - amperes per phase}} = \frac{\text{active power}}{\text{apparent power}} \qquad \textbf{1.3(10)}$$

Note: If the voltages have the same waveform as the corresponding currents, power factor becomes the same as phasor power factor. If the voltages and currents are sinusoidal and for polyphase circuits, from symmetrical sets, $F_p = \cos(\alpha - \beta)$. (3)

Pressure, ambient. The pressure of the medium surrounding a *device.*

Pressure, design. The pressure used in the design of a vessel or *device* for the purpose of determining the minimum permissible thickness or physical characteristics of the parts for a given *maximum working pressure (MWP)* at a given temperature.

Pressure, leak. The pressure at which some discernible leakage first occurs in a *device.*

Pressure, maximum working (MWP). The maximum total pressure permissible in a *device* under any circumstances during operation, at a specified temperature. It is the highest pressure to which it will be subjected in the *process*. It is a designed safe limit for regular use. *Note:* MWP can be arrived at by two methods: (1) designed, by adequate design analysis, with a safety factor and (2) tested, by rupture testing of typical samples. See *pressure, design.*

Pressure, operating. The actual pressure at which a *device* operates under normal conditions. This pressure may be positive or negative with respect to atmospheric pressure.

Pressure, process. The pressure at a specified point in the *process* medium. (Ref. 8)

Pressure, rupture. The pressure, determined by test, at which a *device* will burst. *Note:* This is an alternative to the design procedure for establishing *maximum working pressure* (MWP). The rupture pressure test consists of causing the *device* to burst.

Pressure, static. The *steady-state* pressure applied to a *device;* in the case of a differential-pressure *device,* the *process pressure* applied equally to both connections.

Pressure, supply. The pressure at the supply port of a *device.* (8)

Pressure, surge. Operating pressure plus the increment above *operating pressure* to which a *device* may be subjected for a very short time during pump starts, valve closings, and so on.

Primary element. See *element, primary.*

Process. Physical or chemical change of matter or conversion of energy; e.g., change in pressure, temperature, speed, electrical potential, and so on.

Process control. The regulation or manipulation of variables influencing the conduct of a *process* so as to obtain a product of desired quality and quantity in an efficient manner.

Process measurement. The acquisition of information that establishes the magnitude of *process* quantities.

Process pressure. See *pressure, process.*

Process temperature. See *temperature, process.*

Program controller. See *controller, program.*

Proportional band. The change in input required to produce a full *range* change in output due to *proportional control action. Note 1:* It is reciprocally related to proportional gain. *Note 2:* It may be stated in input units or as a percentage of the input span (usually the indicated or recorded input span). The preferred term is "proportional gain." See *gain, proportional.* (8)

Proportional control action. See *control action, proportional.*

Proportional controller. See *controller, proportional.*

Proportional gain. See *gain, proportional.*

Proportional plus derivative control action. See *control action, proportional plus derivative.*

© 2003 by Béla Lipták

Proportional plus derivative controller. See *controller, proportional plus derivative.*

Proportional plus integral control action. See *controller, proportional plus integral.*

Proportional plus integral controller. See *controller, proportional plus integral.*

Proportional plus integral plus derivative control action. See *control action, proportional plus integral plus derivative.*

Proportional plus integral plus derivative controller. See *controller, proportional plus integral plus derivative.*

Proportional plus rate control action. See *controller, proportional plus derivative.*

Proportional plus rate controller. See *controller, proportional plus derivative.*

Proportional plus reset control action. See *control action, proportional plus integral plus derivative.*

Proportional plus reset controller. See *controller, proportional plus integral plus derivative.*

Proportional speed floating controller. See *controller, integral.*

Ramp response. See *response, ramp.*

Ramp response time. See *time, ramp response.*

Range. The region between the limits within which a quantity is measured, received, or transmitted, expressed by stating the *lower* and *upper range values. Note 1:* For example, (a) 0 to 150°F, (b) –20 to +200°F, and (b) 20 to 150°C. *Note 2:* Unless otherwise modified, input *range* is implied. *Note 3:* The following compound terms are used with suitable modifications in the units: *measured variable range, measured signal range,* indicating scale range, chart scale range, and so on. See Tables 1.3w and 1.3x. *Note 4:* For multirange *devices,* this definition applies to the particular range that the *device* is set to measure. (3, 8)

Range, elevated-zero. A *range* in which the zero value of the *measured variable, measured signal,* or other quantity is greater than the *lower range value.* See Table 1.3w. *Note 1:* The zero may be between the lower and upper range values, at the upper range value, or above the upper range value. *Note 2:* Terms *suppression, suppressed range,* or *suppressed span* are frequently used to express the condition in which the zero of the *measured variable* is greater than the *lower range value.* The term "elevated-zero range" is preferred. (Ref. 8)

Range limit, lower. The lowest value of the *measured variable* that a *device* can be adjusted to measure. *Note:* The following compound terms are used with suitable modifications to the units: *measured variable* lower range limit, *measured signal* lower range limit, and so on. See Tables 1.3w and 1.3x. (Ref. 8)

Range limit, upper. The highest value of the *measured variable* that a *device* can be adjusted to measure. *Note:* The following compound terms are used with suitable modifications to the units: *measured variable* upper range limit, *measured signal* upper range limit, and so on. See Tables 1.3w and 1.3x. (Ref. 8)

Range, suppressed-zero. A *range* in which the zero value of the *measured variable* is less than the *lower range value.* (Zero does not appear on the scale.) See Table 1.3w. *Note 1:* For example: 20 to 100. *Note 2:* Terms *elevation, elevated range,* or *elevated span* are frequently used to express the condition in which the zero of the *measured variable* is less than the *lower range value.* The term "suppressed-zero range" is preferred. (Ref. 2, Ref. 8)

Range value, lower. The lowest value of the *measured variable* that a *device* is adjusted to measure. *Note:* Several compound terms are used with suitable modifications to the units, including *measured variable* lower range value, *measured signal* lower range value, and others. See Tables 1.3w and 1.3x. (Ref. 8)

Range value, upper. The highest value of the *measured variable* that a *device* is adjusted to measure. *Note:* Several compound terms are used with suitable modifications to the units, including *measured variable* upper range value, *measured signal* upper range value, and others. See Tables 1.3w and 1.3x. (Ref. 8)

Rate. See *control action, derivative.*

TABLE 1.3w

Illustrations of the Use of Range and Span Terminology

Typical Ranges	*Name*	*Range*	*Lower Range Value*	*Upper Range Value*	*Span*	*Supplementary Data*
0 +100	—	0 to 100	0	+100	100	—
20 +100	Suppressed zero range	20 to 100	20	+100	80	Suppression Ratio = 0.25
–25 0 +100	Elevated zero range	–25 to +100	–25	+100	125	—
–100 0	Elevated zero range	–100 to 0	–100	0	100	—
–100 –20	Elevated zero range	–100 to –20	–100	–20	80	—

© 2003 by Béla Lipták

TABLE 1.3x
USA Domestic Units: Illustrations of the Use of the Terms "Measured Variable" and "Measured Signal"

Typical Ranges	Type of Range	Range	Lower Range Value	Upper Range Value	Span
(1) Thermocouple 0 2000°F Type K T/C	Measured variable	0 to 2000°F	0°F	2000°F	2000°F
–0.68 +44.91 mV	Measured signal	–0.68 to +44.91 mV	–0.68 mV	+44.91 mV	45.59 mV
0 20 ×100 = °F	Scale and/or chart	0 to 2000°F	0°F	2000°F	2000°F
(2) Flowmeter 0 10 000 lb/h	Measured variable	0 to 10 000 lb/h	0 lb/h	10 000 lb/h	10 000 lb/h
0 100 in H_2O	Measured signal	0 to 100 in H_2O	0 in H_2O	100 in H_2O	100 in H_2O
0 10 ×1000 = lb/h	Scale and/or chart	0 to 10 000 lb/h	0 lb/h	10 000 lb/h	10 000 lb/h
(3) Tachometer 0 500 rpm	Measured variable	0 to 500 rpm	0 rpm	500 rpm	500 rpm
0 5 V	Measured signal	0 to 5 V	0 V	5 V	5 V
0 80 ft/s	Scale and/or chart	0 to 80 ft/s	0 ft/s	80 ft/s	80 ft/s

Rate control action. See *control action, derivative.*
Rate gain. See *gain, derivative action.*
Ratio controller. See *controller, ratio.*
Recording instrument. See *instrument, recording.*
Reference accuracy. See *accuracy rating.*
Reference-input element. See *element, reference-input.*
Reference-input signal. See *signal, reference-input.*
Reference junction. The thermocouple junction that is at a known or reference temperature. *Note:* The reference junction is physically the point at which the thermocouple or thermocouple extension wires are connected to a *device* or where the thermocouple is connected to a pair of lead wires, usually copper. (Ref. 7)
Reference junction compensation. A means of counteracting the effect of temperature variations of the *reference junction* when allowed to vary within specified limits.
Reference operating conditions. See *operating conditions, reference.*
Reference performance. Performance attained under *reference operating conditions*. *Note:* Performance includes such things as accuracy, dead band, hysteresis, linearity, repeatability, etc. (8)
Regulator. See *controller, self-operated (regulator).*
Relative damping. See *damping, relative.*
Reliability. The probability that a *device* will perform its objective adequately, for the period of time specified, under the *operating conditions* specified. (Ref. 4)
Repeatability. The closeness of agreement among a number of consecutive measurements of the output for the same value of the input under the same *operating conditions*, approaching from the same direction, for full *range* traverses. See Figure 1.3y. *Note:* It is usually measured as nonrepeatability and expressed as *repeatability* in percent of *span*. It does not include *hysteresis*. See *test procedure*. (8, Ref. 2)

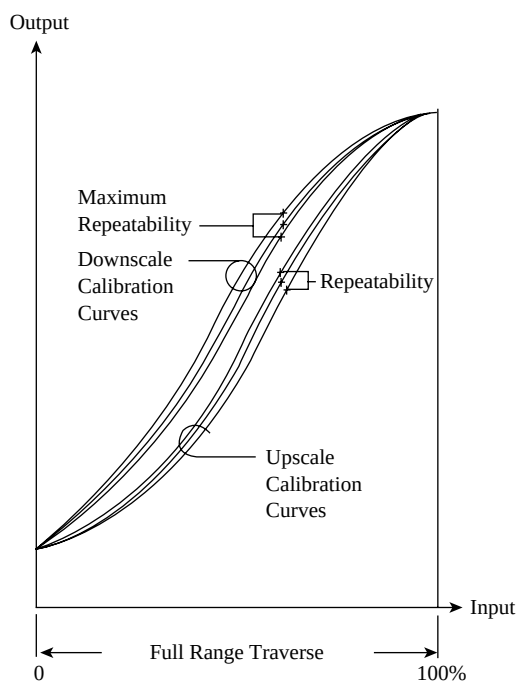

FIG. 1.3y
Repeatability.

© 2003 by Béla Lipták

Reproducibility. In process instrumentation, the closeness of agreement among repeated measurements of the output for the same value of input made under the same *operating conditions* over a period of time, approaching from both directions. *Note 1:* It is usually measured as nonreproducibility and expressed as reproducibility in percent of *span* for a specified time period. Normally, this implies a long period of time, but, under certain conditions, the period may be a short time during which *drift* may not be included. *Note 2:* Reproducibility includes hysteresis, dead band, drift, and repeatability. *Note 3:* Between repeated measurements, the input may vary over the *range* and *operating conditions* may vary within *normal operating conditions.* See *test procedures.* (8)

Reset control action. See *control action, integral (reset).*

Reset rate. See *integral action rate.*

Resolution. The least interval between two adjacent discrete details that can be used to distinguish one from the other. (4)

Resonance. Of a system or element, a condition evidenced by large oscillatory amplitude, which results when a small amplitude of periodic input has a frequency approaching one of the natural frequencies of the driven system. (4, 8)

Response, dynamic. The behavior of the output of a *device* as a function of the input, both with respect to time. (8, Ref. 2)

Response, ramp. The total (transient plus *steady-state*) *time response* resulting from a sudden increase in the rate of change from zero to some finite value of the input stimulus. (Ref. 4, "response, ramp-forced")

Response, step. The total (*transient* plus *steady-state*) *time response* resulting from a sudden change from one constant level of input to another. (4, "response, stepforced")

Response, time. An output expressed as a function of time, resulting from the application of a specified input under specified *operating conditions.* See Figure 1.3z. (4, 8)

Return signal. See *signal, return.*

Reverse action controller. See *controller, reverse acting.*

Rise time. See *time, rise.*

rms value. See *value, rms.*

Rupture pressure. See *pressure, rupture.*

Sampling controller. See *controller, sampling.*

Sampling period. The time interval between observations in a periodic sampling control system. (4, 8)

Scale factor. The factor by which the number of scale divisions indicated or recorded by an instrument should be multiplied to compute the value of the measured variable. (Ref. 8) *Note:* Deflection factor is a more general term than scale factor in that the instrument response may be expressed alternatively in units other than scale divisions. (Ref. 3)

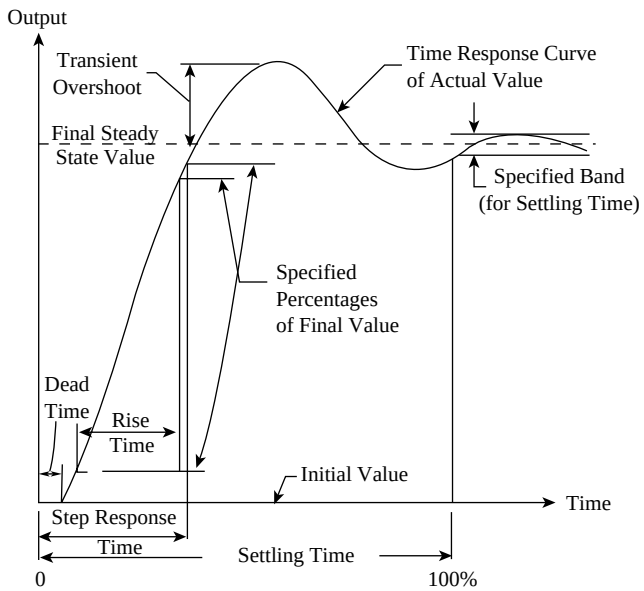

FIG. 1.3z
Typical time response of a system to a step increase of input.

Self-heating. Internal heating resulting from electrical energy dissipated with a device. (Ref. 11)

Self-operated controller. See *controller, self-operated (regulator).*

Self-regulation (inherent regulation). The property of a process or machine that permits attainment of equilibrium, after a disturbance, without the intervention of a controller. (4)

Sensing element. See *element, sensing.*

Sensing element elevation. The difference in elevation between the sensing element and the instrument. *Note:* The elevation is considered positive when the sensing element is above the instrument. (8)

Sensitivity. The ratio of the change in output magnitude to the change of the input that causes it after the steady-state has been reached. *Note 1:* It is expressed as a ratio with the units of measurement of the two quantities stated. (The ratio is constant over the range of a linear device. For a nonlinear device, the applicable input level must be stated.) *Note 2:* Sensitivity has frequently been used to denote the dead band. However, its usage in this sense is deprecated, since it is not in accordance with accepted standard definitions of the term. (8, Ref. 4)

Sensor. See *transducer.* (11)

Servomechanism. An automatic feedback control device in which the controlled variable is mechanical position or any of its time derivatives. (Ref. 4)

Setpoint. An input variable that sets the desired value of the controlled variable. *Note 1:* The input variable may be manually set, automatically set, or programmed. *Note 2:* It is expressed in the same units as the controlled variable. (8, Ref. 4, "command")

© 2003 by Béla Lipták

Settling time. See *time, settling.*

Shared time control. See *control, shared time.*

Sheltered area. See *area, sheltered.*

Signal. In process control, a physical variable, one or more *parameters* of which carry information about another variable (which the signal represents). (17)

Signal, actuating error. In process instrumentation, the *reference-input signal* minus the *feedback signal.* See Figure 1.3p. See also *deviation, system.* (8, Ref. 4, "signal, actuating")

Signal amplitude sequencing (split ranging). Action in which two or more *signals* are generated or two or more *final controlling elements* are actuated by an *input signal,* each one responding consecutively, with or without overlap, to the magnitude of that *input signal.* See Figure 1.3aa. (8)

Signal, analog. A *signal* representing a variable that may be continuously observed and continuously represented.

Signal converter. See *signal transducer.*

Signal, digital. Representation of information by a set of discrete values in accordance with a prescribed law. These values are represented by numbers.

Signal, error. In a *closed loop,* the *signal* resulting from subtracting a particular *return signal* from its corresponding *input signal.* See also *signal, actuating error.* (4, 8)

Signal, feedback. In process instrumentation, the *return signal* that results from a measurement of the *directly controlled variable.* See Figure 1.3p. (8. Ref. 4)

Signal, feedforward. See *control, feedforward.*

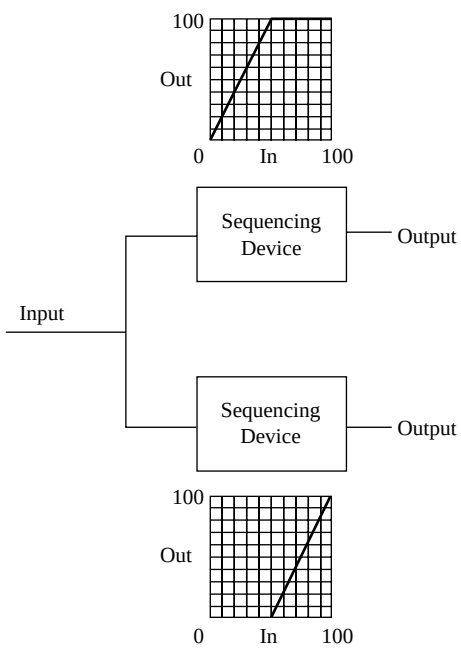

FIG. 1.3aa
Signal amplitude sequencing.

Signal, input. A *signal* applied to a *device, element,* or system. (8, Ref. 4)

Signal, measured. The electrical, mechanical, pneumatic, or other variable applied to the input of a *device.* It is the analog of the *measured variable* produced by a *transducer* (when such is used).

Example 1: In a thermocouple thermometer, the measured signal is an electromotive force (emf), which is the electrical analog of the temperature applied to the thermocouple.

Example 2: In a *flowmeter,* the measured signal may be a differential pressure, which is the analog of the rate of flow through the orifice.

Example 3: In an electric tachometer system, the measured signal may be a voltage, which is the electrical analog of the speed of rotation of the part coupled to the tachometer generator.

See *variable, measured.* (8, Ref. 2)

Signal, output. A *signal* delivered by a *device, element,* or system. (8, Ref. 4)

Signal, reference-input. One external to a control loop, serving as the standard of comparison for the *directly controlled variable.* See Figure 1.3p. (4, 8)

Signal, return. In a *closed loop,* the *signal* resulting from a particular *input signal* and transmitted by the loop and to be subtracted from the *input signal.* See also *signal, feedback.* (4, 8)

Signal selector. A *device* that automatically selects either the highest or lowest *input signal* from among two or more *input signals. Note:* This device is sometimes referred to as a "signal auctioneer." (Ref. 8, "auctioneering device")

Signal-to-noise ratio. Ratio of *signal* amplitude to *noise* amplitude. *Note:* For sinusoidal and non-sinusoidal *signals,* amplitude may be peak or rms and should be so specified. (Ref. 8)

Signal transducer (signal converter). A transducer that converts one standardized transmission *signal* to another. (Ref. 8)

Single-speed floating controller. See *controller, single-speed floating.*

Source impedance. See *impedance, source.*

Span. The algebraic difference between the upper and lower range values. *Note 1:* For example, (a) *range* 0 to 150°F, *span* 150°F, (b) *range* –20 to 200°F, *span* 220°F, and (c) *range* 20 to 150°C, *span* 130°C. *Note 2:* The following compound terms are used with suitable modifications to the units, e.g., *measured variable span,* and *measured signal span. Note 3:* For multirange *devices,* this definition applies to the particular *range* that the *device* is set to measure. See Tables 1.3w and 1.3x. (8, Ref. 3)

Span adjustment. See *adjustment, span.*

Span error. See *error, span.*

© 2003 by Béla Lipták

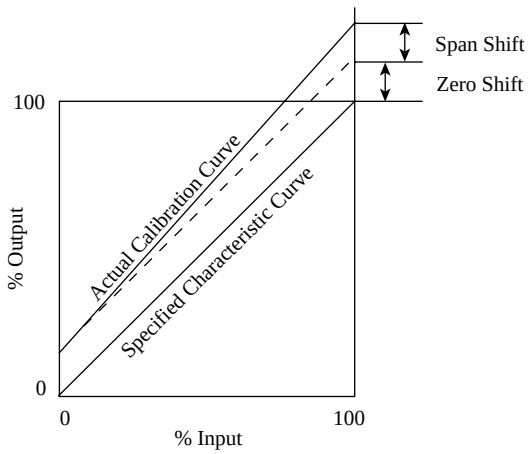

FIG. 1.3bb
Shift, span, and zero.

Span shift. Any change in slope of the input–output curve. See Figure 1.3bb.

Split ranging. See *signal amplitude sequencing (split ranging).*

Static friction. See *stiction.*

Static gain. See *gain, static.*

Static pressure. See *pressure, static.*

Steady state. A characteristic of a condition, such as value, rate, periodicity, or amplitude, exhibiting only negligible change over an arbitrarily long period of time. *Note:* It may describe a condition in which some characteristics are static and others are dynamic. (8, Ref. 4)

Steady-state deviation. See *deviation, steady-state.*

Step response. See *response, step.*

Step response time. See *time, step response.*

Stiction (static friction). Resistance to the start of motion, usually measured as the difference between the driving values required to overcome static friction upscale and downscale. (4)

Stiffness. In process control, the ratio of change of force (or torque) to the resulting change in deflection of a spring-like *element. Note:* Stiffness is the opposite of compliance.

Subsidence. See *damping,* also *subsidence ratio.*

Subsidence ratio. In process instrumentation, the ratio of the peak amplitudes of two successive oscillations of the same sign, the numerator representing the first oscillation in time. See Figure 1.3q. (Ref. 16)

Summing point. Any point at which *signals* are added algebraically. See Figure 1.3p. (4, 8)

Supervisory control. See *control, supervisory.*

Supply pressure. See *pressure, supply.*

Suppressed range. See *range, elevated-zero.*

Suppressed span. See *range, elevated-zero.*

Suppressed-zero range. See *range, suppressed-zero.*

Suppression. See *range, elevated-zero.*

Suppression ratio (of a suppressed zero range). The ratio of the lower range value to the span. *Note:* For example: *range* 20 to 100, suppression ratio = 20/80 = 0.25. See Table 1.3w. (8, Ref. 2)

Surge pressure. See *pressure, surge.*

Switching point. A point in the input *span* of a *multiposition controller* at which the *output signal* changes from one *position* to another. See Figure 1.3l. (8)

Systematic error. See *error, systematic.*

System, control. See *control system.*

System, controlled. The collective functions performed in and by the equipment in which the variable(s) is (are) to be controlled. *Note:* Equipment as embodied in this definition should be understood not to include any automatic control equipment. (Ref. 8, "process")

System, controlling. (1) Of a *feedback control system*, the portion that compares functions of a *directly controlled variable* and a *setpoint* and adjusts a *manipulated variable* as a function of the difference. It includes the *reference-input elements*; *summing point*; *forward* and *final controlling elements*; and *feedback elements* (including *sensing element*). (2) Of a *control system* without *feedback*, the portion that manipulates the *controlled system.* (Ref. 4, Ref. 8)

System deviation. See *deviation, system.*

System, directly controlled. The body, *process,* or machine directly guided or restrained by the *final controlling element* to achieve a prescribed value of the *directly controlled variable.* (4, 8)

System, idealized. An imaginary system whose ultimately controlled variable has a stipulated relationship to a specified *setpoint. Note:* It is a basis for performance standards. (8, Ref. 4)

System, indirectly controlled. The portion of the *controlled system* in which the *indirectly controlled variable* is changed in response to changes in the *directly controlled variable.* See Figure 1.3p. (Ref. 4, Ref. 8)

System, linear. One of which the *time response* to several simultaneous inputs is the sum of their independent *time responses. Note:* It is represented by a linear differential equation and has a *transfer function,* which is constant for any value of input within a specified *range.* A system not meeting these conditions is described as "nonlinear." (Ref. 4)

Tapping. See *dither.*

Temperature, ambient. The temperature of the medium surrounding a *device. Note 1:* For *devices* that do not generate heat, this temperature is the same as the temperature of the medium at the point of *device* location when the *device* is not present. *Note 2:* For *devices* that do generate heat, this temperature is the temperature of the medium surrounding the *device* when it is present and dissipating heat. *Note 3:* Allowable ambient temperature limits are based on the assumption that the *device* in question is not exposed to significant radiant energy sources. (8)

© 2003 by Béla Lipták

Temperature, process. The temperature of the *process* medium at the *sensing element.* (8)

Terminal-based conformity. See *conformity, terminal-based.*

Terminal-based linearity. See *linearity, terminal-based.*

*Terminal shock. A*n abrupt temperature change applied to a device. (8)

Three-position controller. See *controller, three-position.*

Time constant. In process instrumentation, the value T in an exponential response term $A \exp(-t/T)$ or in one of the transform factors

$$1 + sT,\ 1 + j\omega T,\ 1/(1 + sT),\ 1/(1 + j\omega T) \qquad \textbf{1.3(11)}$$

where

s = complex variable
t = time, seconds
T = time constant
$j = \sqrt{-1}$
ω = angular velocity, radians per second

Note: For the output of a first-order system forced by a step or an impulse, T is the time required to complete 63.2% of the total rise or decay; at any instant during the process, T is the quotient of the instantaneous rate of change divided into the change still to be completed. In higher-order systems, there is a time constant for each of the first-order components of the process. In a *Bode diagram,* break points occur at $\omega = 1/T$. (Ref. 4, Ref. 8)

Time constant, derivative action. Of *proportional plus derivative control action,* a *parameter* the value of which is equal to $1/2\pi\ f_d$ where f_d is the frequency (in hertz) on a *Bode diagram* of the lowest frequency gain corner resulting from *derivative control action.* (4, 8)

Time constant, integral action. (1) Of *proportional plus integral control action,* a *parameter* whose value is equal to $1/2\pi f_i$ where f_i is the frequency (in hertz) on a *Bode diagram* of the highest frequency gain corner resulting from *integral control action.* (2) It is the reciprocal of *integral action rate. Note:* The use of integral action rate is preferred. (8, Ref. 4)

Time, correction. See *time, settling.*

Time, dead. The interval of time between initiation of an input change or stimulus and the start of the resulting observable response. See Figure 1.3z. (Ref. 4, Ref. 8)

Time, derivative action. In *proportional plus derivative control action,* for a unit ramp *signal* input, the advance in time of the *output signal* (after *transients* have subsided) caused by *derivative control action,* as compared to the *output signal* due to *proportional control action* only. (Ref. 5, Ref. 8)

Time proportioning control. See *control, time proportioning.*

Time, ramp response. The time interval by which an output lags an input when both are varying at a constant rate. (4, Ref. 3, "response time, ramp-forced")

Time response. See *response, time.*

Time, rise. The time required for the output of a system (other than a first-order one) to change from a small specified percentage (often 5 or 10) of the *steady-state* increment to a large specified percentage (often 90 to 95), either before or in the absence of overshoot. See Figure 1.3z. *Note:* If the term is unqualified, response to a unit step stimulus is understood; otherwise, the pattern and magnitude of the stimulus should be specified. (Ref. 4, Ref. 8)

Time schedule controller. See *controller, time schedule.*

Time, setting. The time required, following the initiation of a specified stimulus to a system, for the output to enter and remain within a specified narrow band centered on its *steady-state* value. See Figure 1.3z. *Note:* The stimulus may be a step impulse, ramp, parabola, or sinusoid. For a step or impulse, the band is often specified as ±2%. For nonlinear behavior, both magnitude and pattern of the stimulus should be specified. (8, Ref. 4)

Time, step response. Of a system or an *element,* the time required for an output to change from an initial value to a large specified percentage of the final *steady-state* value either before or in the absence of overshoot, as a result of a step change to the input. See Figure 1.3z. *Note:* Usually stated for 90, 95, or 99% change. See *time constant* for use of 63.2% value. (Ref. 4, "time response," Ref. 8)

Transducer. An *element* or *device* that receives information in the form of one quantity and converts it to information in the form of the same or another quantity. *Note:* This is a general term and definition and, as used here, applies to specific classes of *devices* such as *primary element, signal transducer,* and *transmitter.* See *primary element, signal transducer,* and *transmitter.* (Ref. 4, Ref. 8)

Transfer function. A mathematical, graphical, or tabular statement of the influence that a system or *element* has on a *signal* or action compared at input and at output terminals. (4, 8)

Transient. In process instrumentation, the behavior of a variable during transition between two *steady states.* (17)

Transient deviation. See *deviation, transient.*

Transient overshoot. The maximum excursion beyond the final *steady-state* value of output as the result of an input change. (Ref. 8)

Transient overvoltage. A momentary excursion in voltage occurring in a *signal* or supply line of a *device* that exceeds the maximum rated conditions specified for that *device.*

Transmitter. A *transducer* that responds to a *measured variable* by means of a *sensing element* and converts it to a standardized transmission *signal* that is a function only of the *measured variable.* (Ref. 8)

Transportation and storage conditions. The conditions to which a *device* may be subjected between the time

© 2003 by Béla Lipták

of construction and the time of installation. Also included are the conditions that may exist during shutdown. See Figure 1.3v. *Note:* No permanent physical damage or impairment of operating characteristics shall take place under these conditions, but minor adjustments may be needed to restore performance to normal. (8)

Transverse interference. See *interference, normal-mode.*

Two-position controller. See *controller, two-position.*

Ultimately controlled variable. See *variable, ultimately controlled.*

Undamped frequency. See *frequency, undamped.*

Underdamped. See *damping.*

Upper range limit. See *range limit, upper.*

Upper range value. See *range value, upper.*

Value, desired. In process instrumentation, the value of the *controlled variable* wanted or chosen. *Note:* The desired value equals the *ideal value* in an *idealized system.* (8)

Value, ideal. In process instrumentation, the value of the indication, output, or *ultimately controlled variable* of an idealized *device* or system. *Note:* It is assumed that an ideal value can always be defined even though it may be impossible to achieve. (8)

Value, measured. The numerical quantity resulting, at the instant under consideration, from the information obtained by a measuring *device.* (Ref. 16)

Value, rms (root-mean-square value). The square root of the average of the squares of the instantaneous values. *Note:*

$$\text{rms value} = \left[\frac{1}{T}\int_{t_o}^{t_o+T} x^2 dt\right]^{1/2} \qquad \textbf{1.3(12)}$$

where

x is the instantaneous value

t_o is any value of time

T is the observation period (4)

Variable, directly controlled. In a control loop, the variable whose value is sensed to originate a *feedback signal.* (4, 8)

Variable, indirectly controlled. A variable that does not originate a *feedback signal* but is related to and influenced by the *directly controlled variable.* (4, 8)

Variable, manipulated. A quantity or condition that is varied as a function of the *actuating error signal* so as to change the value of the *directly controlled variable.* (4, 8)

Variable, measured. A quantity, property, or condition that is measured. *Note 1:* It is sometimes referred to as the measurand. *Note 2:* Common measured variables are temperature, pressure, rate of flow, thickness, speed, and others. (Ref. 8)

Variable, ultimately controlled. The variable whose control is the end purpose of the *automatic control system.*

Velocity limit. A limit that the rate of change of a specified variable may not exceed. (Ref. 8)

Velocity limiting control. See *control, velocity limiting.*

Vibration. A periodic motion or oscillation of an *element, device,* or system. *Note 1:* Vibration is caused by any excitation that displaces some or all of a particular mass from its position of equilibrium. The resulting vibration is the attempt of the forces, acting on and within the mass, to equalize. *Note 2:* The amplitude and duration of any vibration is dependent on the period and amplitude of the excitation and is limited by the amount of *damping* present.

Voltage, common-mode. A voltage of the same polarity on both sides of a differential input relative to ground. See Figure 1.3cc.

Voltage, normal-mode. A voltage induced across the input terminals of a *device.* See Figure 1.3dd.

Warm-up period. The time required after energizing a *device* before its rated performance characteristics apply. (8)

Zero adjustment. See *adjustment, zero.*

Zero-based conformity. See *conformity, zero-based.*

Zero-based linearity. See *linearity, zero-based.*

Zero-elevation. For an *elevated-zero range,* the amount by which the *measured variable* zero exceeds the

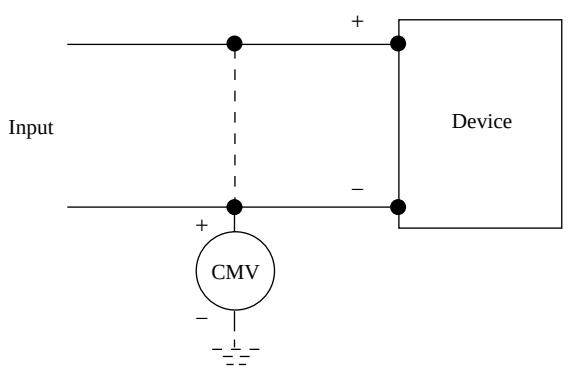

FIG. 1.3cc
Common mode voltage.

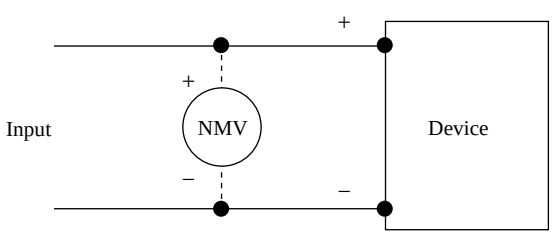

FIG. 1.3dd
Normal mode voltage.

© 2003 by Béla Lipták

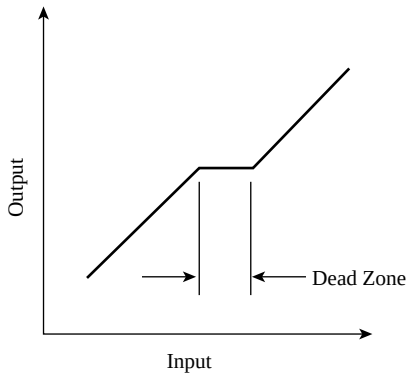

Fig. 1.3ee
Dead zone.

lower range value. It may be expressed either in units of *measured variable* or in percent of *span.* (8)

Zero error. See *error, zero.*

Zero frequency gain. See *gain, zero frequency.*

Zero shift. Any parallel shift of the input–output curve. See Figure 1.3bb.

Zero suppression. For a *suppressed-zero range,* the amount by which *measured variable* zero falls below the *lower range value.* It may be expressed either in units of the *measured variable* or in percent of *span.* (8)

Zone. On a *multiposition controller,* the *range* of input values between selected switching points or any *switching point* and range limit. See Figure 1.3l. (8)

Zone, dead. (1) For a *multiposition controller,* a *zone* of input in which no value of the output exists. It is usually intentional and adjustable. See Figure 1.3m. (Ref. 8) (2) A predetermined range of input through which the output remains unchanged, irrespective of the direction of change of the *input signal.* See Figure 1.3ee. The notes apply to definition (2) only. *Note 1:* There is but one input-output relationship, as shown in Figure 1.3ee. *Note 2:* Dead zone produces no phase lag between input and output.

Zone, intermediate. Any *zone* not bounded by a range limit. (8)

Zone, live. A *zone* in which a value of the output exists. (8)

Zone, neutral. A predetermined *range* of input values in which the previously existing output value is not changed. See Figure 1.3o. (Ref. 4)

TEST PROCEDURES

The purpose of the test procedures, as described herein, is to illustrate and clarify accuracy-related terms. It is intended only that the procedures indicate a generalized method of test. The test procedures that follow are for the following terms:

accuracy, measured
dead band
drift, point
hysteresis
linearity, independent
linearity, terminal-based
linearity, zero-based
repeatability
reproducibility

Tests described are for determination of static, not dynamic, performance characteristics. When relating performance characteristics such as values of *accuracy* to values of other terms such as *linearity, hysteresis, dead band,* and *repeatability,* equivalent units must be used.

The *accuracy rating* of reference measuring means as related to the characteristics being tested shall, preferably, be no greater than one-tenth the tolerance allowed on the test device, but in any case not greater than one-third the allowed tolerance.

Example: dead band
Test device, allowed dead band 0.2%
Measuring *device,* preferred *dead band* 0.02%
Measuring *device,* allowed *dead band* 0.06%

When the *accuracy rating* of the reference measuring means is one-tenth or less than that of the *device* under test, the *accuracy rating* of the reference measuring means may be ignored. When the *accuracy rating* of the reference measuring means is one-third or less but greater than one-tenth that of the *device* under test, the *accuracy rating* of the reference measuring means shall be taken into account.

The *device* under test and the associated test equipment shall be allowed to stabilize under *steady-state operating conditions.* All testing shall be done under these conditions. The *operating conditions* that would influence the test shall be observed and recorded. If the performance characteristic being determined requires *reference operating conditions,* the conditions of test shall be maintained at *reference operating conditions.*

The number of test points to determine the desired performance characteristic of a *device* should be distributed over the *range.* They should include points at or near (within 10%) the *lower* and *upper range values.* There should not be less than five points, and preferably more. The number and location of these test points should be consistent with the degree of exactness desired and the characteristics being evaluated.

Before recording observations, the *device* under test shall be exercised by a number of full range traverses in each direction.

At each point being observed, the input shall be held steady until the *device* under test becomes stabilized at its apparent final value.

© 2003 by Béla Lipták

Tapping or vibrating the *device* under test is not allowed unless the performance characteristic under study requires such action.

Calibration Cycle

Maintain test conditions and precondition the test device as indicated above in the introduction. Observe and record output values for each desired input value for one full-range traverse in each direction starting near the mid-range value. The final input must be approached from the same direction as the initial input. Apply the input in such a way as to not overshoot each input value.

Calibration Curve

For the purpose of the following test procedures, the *calibration curve* will be prepared as a "deviation plot." Determine the difference between each observed output value and its corresponding ideal output value. This difference is the *deviation* and may be expressed as a percent of ideal output *span.* The *deviation* is plotted vs. input or ideal output. Figure 1.3ff illustrates percent *deviation* plotted vs. percent input. A positive *deviation* denotes that the observed output value is greater than the ideal output value.

Test Procedures

Accuracy, measured. *Measured accuracy* may be determined from the *deviation* values (Table 1.3gg) of a number of calibration cycles. It is the greatest positive and negative *deviation* of the recorded values (from both an upscale and a downscale output traverse) from the reference or zero *deviation* line. *Measured accuracy* may be expressed as a plus and minus percentage of ideal output *span.* Example: The *measured accuracy* is +0.26% to −0.32% of output *span.*

Dead band. Maintain test conditions and precondition the test *device* as indicated in the introduction and proceed as follows:

1. Slowly vary (increase or decrease) the input to the *device* being tested until a detectable output change is observed.
2. Observe the input value.
3. Slowly vary the input in the opposite direction (decrease or increase) until a detectable output change is observed.
4. Observe the input value.

The increment through which the *input signal* is varied (difference between steps 2 and 4) is the *dead band.* It is determined from a number of cycles (steps 1 through 4). The maximum value is reported. The *dead band* should be determined at a number of points to make certain that the maximum *dead band* has been observed. *Dead band* may be expressed as a percent of input *span.*

Example: The dead band is 0.10% of input span.

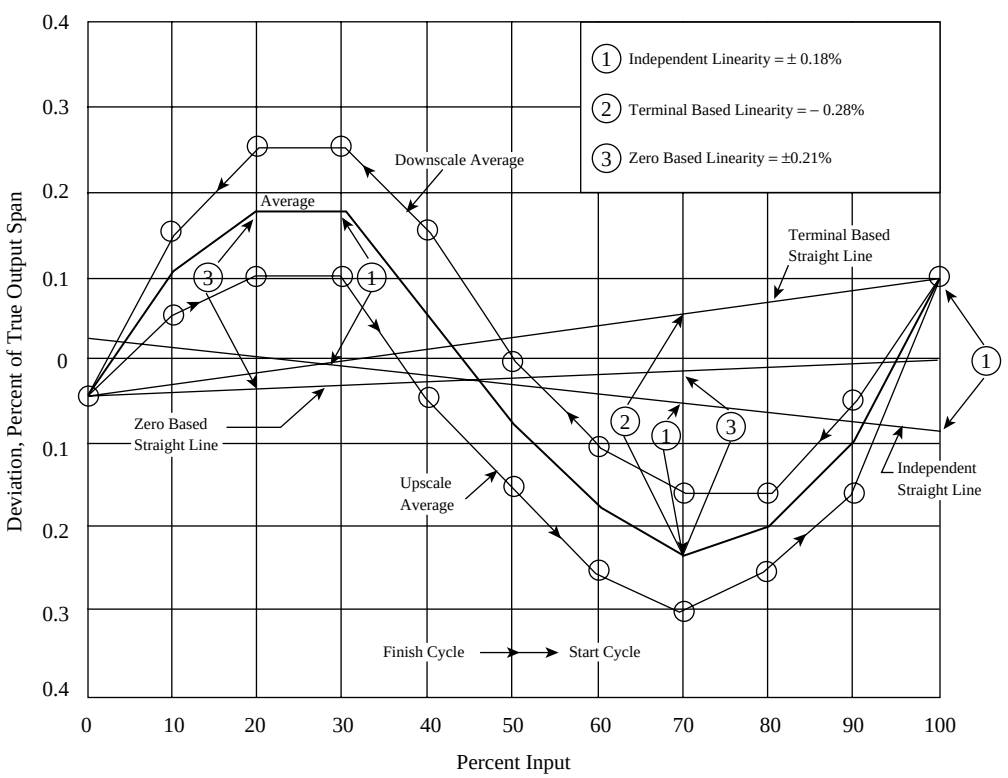

FIG. 1.3ff
Calibration curve (of data from Table 1.3gg).

© 2003 by Béla Lipták

TABLE 1.3gg
Calibration Report (see Fig. 1.3ff)

Input	ERROR										
	Up Actual	Down Actual	Up Actual	Down Actual	Up Actual	Down Actual	Up Actual	Up Average	Down Average	Up Average	Average Error
%	%	%	%	%	%	%	%	%	%	%	%
0		–0.04		–0.05		–0.06			–0.05		–0.05
10		+0.14	+0.04	+0.15	+0.05	+0.16	+0.06		+0.15	+0.05	+0.10
20		+0.23	+0.08	+0.26	+0.09	+0.26	+0.13		+0.25	+0.10	+0.175
30		+0.24	+0.09	+0.25	+0.10	+0.26	+0.11		+0.25	+0.10	+0.175
40		+0.13	–0.07	+0.15	–0.04	+0.17	–0.04		+0.15	–0.05	+0.05
50	–0.18	–0.02	–0.16	+0.01	–0.13	+0.01	–0.13	–0.15	0	–0.15	–0.075
60	–0.27	–0.12	–0.25	–0.10	–0.23	–0.08		–0.25	–0.10		–0.175
70	–0.32	–0.17	–0.30	–0.16	–0.28	–0.12		–0.30	–0.15		–0.225
80	–0.27	–0.17	–0.26	–0.15	–0.22	–0.13		–0.25	–0.15		–0.20
90	–0.16	–0.06	–0.15	–0.05	–0.14	–0.04		–0.15	–0.05		–0.10
100	+0.09		+0.11		+0.10			+0.10			+0.10

Measured Accuracy = +0.26%
–0.32%
Hysteresis plus Dead Band = +0.22%
Repeatability = 0.05%

Note: Accuracy of reference measuring means was not considered in the determination of the average error.

Drift, point. Maintain test conditions and precondition the test device as indicated in the introduction and proceed as follows:

1. Adjust the input to the desired value without overshoot and record the output value. *Note:* The test *device* should be permitted to warm up (if required) before recording the initial output value.
2. Maintain a fixed *input signal* and fixed *operating conditions* for the duration of the test.
3. At the end of the specified time interval, observe and record the output value.

In evaluating the results of this test, it is presumed that the *dead band* is either negligible or of such a nature that it will not affect the value of *drift.*

Point drift is the maximum change in recorded output value observed during the test period. It is expressed as a percentage of ideal output *span* for a specified time period. Example: The point drift is 0.1% of output span for a 24-h test.

Hysteresis. Hysteresis results from the inelastic quality of an *element* or *device.* Its effect is combined with the effect of *dead band.* The sum of the two effects may be determined directly from the *deviation* values (Table 1.3gg) of a number of test cycles and is the maximum difference between corresponding upscale and downscale outputs for any single test cycle. *Hysteresis* then is determined by subtracting the value of *dead band* from the corresponding value of *hysteresis* plus *dead band* for a given input. The maximum difference is reported. The difference may be expressed as a percentage of ideal output *span.* Example: The hysteresis is 0.12% of output span.

Linearity, independent. Independent linearity may be determined directly from the *calibration* curve (Figure 1.3ff) using the following procedure:

1. Plot a *deviation* curve, which is the average of the corresponding upscale and downscale output readings.
2. Draw a straight line through the average *deviation* curve so as to minimize the maximum *deviation.* It is not necessary that the straight line be horizontal or pass through the end points of the average *deviation* curve.

Independent linearity is the maximum *deviation* between the average *deviation* curve and the straight line. It is determined from the *deviation* plots of a number of calibration cycles. It is measured in terms of independent nonlinearity as a plus or minus percentage of ideal output *span.* Example: The ideal *independent linearity* is ±0.18% of output *span. Note:* The average *deviation* curve is based on the average of corresponding upscale and downscale readings. This permits observation of *independent linearity* independent of *dead band* or *hysteresis.* This concept assumes that, if no *hysteresis* or *dead band* were present, the *deviation* curve would be a single line midway between upscale and downscale curves.

Linearity, terminal-based. Terminal-based linearity may be determined directly from the *calibration curve* (Figure 1.3ff) using the following procedure:

© 2003 by Béla Lipták

1. Plot a *deviation* curve, which is the average of corresponding upscale and downscale output readings.
2. Draw a straight line such that it coincides with the average *deviation* curve at the *upper range value* and the *lower range value.*

Terminal-based linearity is the maximum *deviation* between the average *deviation* curve and the straight line. It is determined from the *deviation* plots of a number of calibration cycles. It is measured in terms of terminal-based nonlinearity as a plus or minus percentage of ideal output *span.* Example: The *terminal-based linearity* is 0.28% of output *span. Note:* The average deviation curve is based on the average of corresponding upscale and downscale readings. This permits observation of terminal-based linearity independent of dead band or hysteresis. This concept assumes that, if no hysteresis or dead band were present, the deviation curve would be a single line midway between upscale and downscale readings.

Linearity, zero-based. Zero-based linearity may be determined directly from the calibration curve (Figure 1.3ff) using the following procedure:

1. Plot a *deviation* curve, which is the average of corresponding upscale and downscale output readings.
2. Draw a straight line such that it coincides with the average *deviation* curve at the *lower range value* (zero) and minimizes the maximum deviation.

Zero-based linearity is the maximum *deviation* between the average *deviation* curve and the straight line. It is determined from the *deviation* plots of a number of calibration cycles. It is measured in terms of zero-based linearity as a plus or minus percentage of the ideal output *span.* Example: The *zero-based linearity* is ±0.21% of output *span. Note:* The average *deviation* curve is based on the average of corresponding upscale and downscale readings. This permits observation of *zero-based linearity* independent of *dead band* or *hysteresis.* This concept assumes that, if no *hysteresis* or *dead band* were present, the *deviation* curve would be a single line midway between upscale and downscale readings.

Repeatability. Repeatability may be determined directly from the *deviation* values (Table 1.3gg) of a number of calibration cycles. It is the closeness of agreement among a number of consecutive measurements of the output for the same value of input approached from the same direction. Fixed *operation conditions* must be maintained.

Observe the maximum difference in percentage *deviation* for all values of output considering upscale and downscale curves separately. The maximum value from either upscale or downscale curve is reported.

Repeatability is the maximum difference in percentage *deviation* observed above and is expressed as a percent of output *span.* Example: The *repeatability* is 0.05% of output *span.*

Reproducibility.

1. Perform a number of calibration cycles as described under "Calibration Cycle."
2. Prepare a calibration curve based on the maximum difference between all upscale and downscale readings for each input observed. The *deviation* values are determined from the number of calibration cycles performed for step 1 above. See section titled "Calibration Curve."
3. Maintain the test device in its regular operating condition, energized and with an *input signal* applied.
4. At the end of the specified time, repeat steps 1 and 2.

The test *operating conditions* may vary over the time interval between measurements if they stay within the *normal operating conditions* of the test *device.* Tests under step 4 above must be performed under the same *operating conditions* that existed for the initial tests.

Reproducibility is the maximum difference between recorded output values (both upscale and downscale) for a given input value. Considering all input values observed, the maximum difference is reported. The difference is expressed as a percentage of output *span* per specified time interval. Example: The *reproducibility* is 0.2% of output *span* for a 30-day test.

References

1. American National Standard C39.2–1964, *Direct-Acting Electrical Recording Instruments (Switchboard and Portable Types).*
2. American National Standard C39.4–1966, *Specifications for Automatic Null-Balancing Electrical Measuring Instruments.*
3. American National Standard C42.100–1972, *Dictionary of Electrical and Electronics Terms.*
4. American National Standard C85.1–1963, *Terminology for Automatic Control.*
5. American National Standard C85.1a-1966, C85.1–1963, *Automatic Control Terminology (suppl.).*
6. American National Standard C85.lb-1966, C85.1–1963, *Automatic Control Terminology (suppl.).*
7. American National Standard MC96.1–1975, *Temperature Measurement Thermocouples.*
8. Scientific Apparatus Makers Association Standard PMC20.1–1973, *Process Measurement and Control Terminology.*
9. ISA-RP12.1–1960, *Electrical Instruments in Hazardous Atmospheres.*
10. ISA-RP12.2–1965, *Intrinsically Safe and Non-Incendive Electrical Instruments.*
11. ISA-S37.1–1969, *Electrical Transducer Nomenclature and Terminology.*
12. ISA-S60.7–1975 (draft standard), *Control Center Construction.*
13. Institute of Electrical and Electronics Engineers, *IEEE 279.*
14. National Fire Protection Association, *NFPA 493.*
15. National Fire Protection Association, *NFPA 501.*
16. International Electrotechnical Commission, International Electrotechnical Vocabulary Publication 50(37)-1966, *Automatic Controlling and Regulating Systems.*
17. International Electrotechnical Commission, International Electrotechnical Vocabulary Draft Chapter 351 (1037)-1972, *Automatic Control and Regulation-Servomechanisms.*
18. International Electrotechnical Commission Technical Committee 65-Working Group 2 (IEC/TC65/WG2), *Service Conditions.*

© 2003 by Béla Lipták

1.4 System Accuracy*

B. G. LIPTÁK (1982, 1995, 2003)

DEFINITIONS OF TERMS

Accuracy (Webster). Freedom from error or the absence of error. Syn. precision, correctness, exactness. (In this sense, the term is a qualitative, not quantitative, concept.)

Accuracy (ISA). In process instrumentation, degree of conformity of an indicated value to a recognized accepted standard value, or ideal value.

Accuracy, measured (ISA). The maximum positive and negative deviation observed in testing a device under specified conditions and by a specified procedure.

Accuracy of measurement (NIST). Closeness of the agreement between the result of a measurement and the value of the measurand…. Because accuracy is a quantitative concept, one should not use it quantitatively or associate numbers with it. (NIST also advises that neither *precision* nor *inaccuracy* should be used in place of *accuracy*.)

Error (ISA). In process instrumentation, the algebraic difference between the indication and the ideal value of the measured signal. It is the quantity that, algebraically subtracted from the indication, gives the ideal value.

Range (ISA). The region between the limits within which a quantity is measured, received, or transmitted, expressed by stating the lower and upper range values.

Rangeability (recommended by IEH). Rangeability of a sensor is the measurement range over which the error statement, in the units of a percentage of actual reading, is guaranteed.

Repeatability (ISA). The closeness of agreement among a number of consecutive measurements of the output for the same value of the input under the same operating conditions, approaching from the same direction, for full-range traverses.

Repeatability (NIST). Closeness of agreement between the results of successive measurements of the same measurand carried out under the same conditions of measurement…. Repeatability may be expressed quantitatively in terms of the dispersion characteristics of the results.

Reproducibility (ISA). In process instrumentation, the closeness of agreement among repeated measurements of the output for the same value of input made under the same operating conditions over a period of time, approaching from both directions.

Reproducibility (NIST). Closeness of agreement between the results of measurements of the same measurand carried out under changed conditions of measurement.

Uncertainty (Webster). A feeling of unsureness about something.

Uncertainty (IEH Section 1.5). Measurement uncertainty is expressed to a confidence level of 95%, and it is the limit to which an error may extend.

Language, Terminology, and Reality

The guide titled *International Vocabulary of Basic and General Terms in Metrology* (commonly referred to as *VIM*) was published by ISO in the name of seven organizations and contains the VIM definitions of 24 terms relevant to measurement and accuracy. So, from a theoretical point of view, we do have standards and internationally agreed upon definitions.

But the reality in the average industrial plant is different, and this *Instrument Engineers' Handbook* is written for the average instrumentation and control (I&C) engineer in those plants. Therefore, when we quantify an error herein, which one should expect when making a measurement with a particular instrument, we will not (yet) use terms such as *uncertainty* but will try to stay on familiar grounds. On the other hand, we will try to take a step in the right direction by improving the clarity of our language.

When an instrument is specified to have ±1% accuracy, people do not expect it to have 99% error! The intended meaning of that statement is ±1% inaccuracy or a ±1% error relative to some reference standard. It is important to emphasize the role of a reference standard in all measurements, as we humans are incapable of measuring anything in the absolute. All we can do is compare an unknown quantity to a known one and determine which is larger or smaller and by how much. The presence of a reference also means that a measurement can be in error not only because the sensor is inaccurate but also because the reference has drifted or was inaccurate to start with.

* Used with permission of the Instrumentation, Systems and Automation Society.

© 2003 by Béla Lipták

CLARIFYING THE "ACCURACY" STATEMENT

In a volume dealing with process measurement, no subject is more deserving of in-depth evaluation than the error that is inherent in all measurement. Good control is possible only if the controlled variable is precisely measured. Yet the term *accuracy* (or, more precisely, *inaccuracy* or *uncertainty*) itself is poorly defined, frequently misunderstood, and often used as a sales gimmick. Consequently, use of this term cries out for international standardization and, as was noted above, ISO has already prepared such standards. The need for clarity of language and standardization exists for the following reasons:

1. When the error or inaccuracy of an instrument is stated to be ±1%, one would assume that this statement refers to the actual measurement—the actual reading. One would assume that, if this particular instrument happens to read 100, the true value of that measurement must fall between 99 and 101, but this frequently is not the case. Some manufacturers express their error statements (inaccuracy percentages) on the basis of "percent of actual span," while others might base it on "percent of full scale," "percent of range," or "percent of upper range value," and so on. This inconsistency is undesirable, because it is confusing. It would be better if all measurement error statements always referred to the *actual measurement.*
2. To make error statements expressed as percentages of the actual measurement truly meaningful, the statement should also specify the measurement range over which the statement holds true. This would be a simple matter if all manufacturers agreed to define *rangeability* as the *measurement range over which their error statement (as a percentage of actual reading units) is guaranteed*. This approach would allow all sensor inaccuracies to be stated on the same basis and therefore would eliminate the confusion. If all detector inaccuracies were stated as "*x*% of actual reading throughout the range of *y*," users could be "comparing apples with apples" when comparing bids, and the room for "creative specmanship" would at least be reduced.
3. Further confusion occurs because different manufacturers include different factors in their error statements. Most suppliers include only linearity, rangeability, and hysteresis errors in their total error statement; they list the error contributions caused by drift, temperature effects, overrange, power supply, humidity, RFI, and vibration separately. Actually, some manufacturers claim an apparent increase in accuracy not by improving precision but by considering fewer and fewer effects in the total error statement. Naturally, to reverse this trend, international agreement is needed with regard to the amount of variation (in ambient temperature, power supply, and others) that the manufacturer's error statements must include.

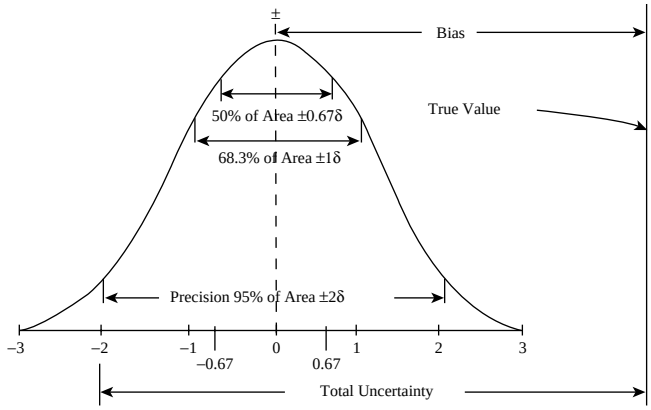

FIG. 1.4a
In any measurement, the total uncertainty (total error) is the sum of the sensor's random error (precision) and its systematic error (bias).

4. Yet another source of confusion is the fact that, when the error of 100 sensors is tested, the results fall onto a "bell curve" (Figure 1.4a). It would be desirable to reach international agreement so that all error statements would always be based on the performance of at least 95% of the units tested. In addition, an error statement should always state if it is based on self-evaluation performed by the supplier or on an evaluation by an independent testing laboratory and, in the latter case, if the test report is available for review.

If the above four recommendations were universally accepted, the subject of sensor error and inaccuracy would be much less confusing. While this is not likely to occur soon, a better understanding of the factors that cause the present state of confusion should be helpful, because it can speed the development of universal standards for sensor error and performance.

TERMINOLOGY OF INACCURACY AND REPEATABILITY

The purpose of all measurement is to obtain the true value of the quantity being measured, and error is thought of as the difference between the measured and the true quantity. Because it is impossible to measure a value without some uncertainty, it is equally impossible to know the exact size of the error. What is possible is to state the limits within which the true value of a measurement will fall.

The accuracy-related terminology used in the process control industry can be illustrated by an example of target shooting (Figure 1.4b). The spread of the nine shots fired into the upper right-hand corner of the target in a tight pattern represents the random error of the shooter. Looking at the penetration of the bullets, one can say that his shooting is repeatable and precise, but precision alone does not guarantee accuracy; it is only the measure of the ability of the shooter, which is called *random error.*

© 2003 by Béla Lipták

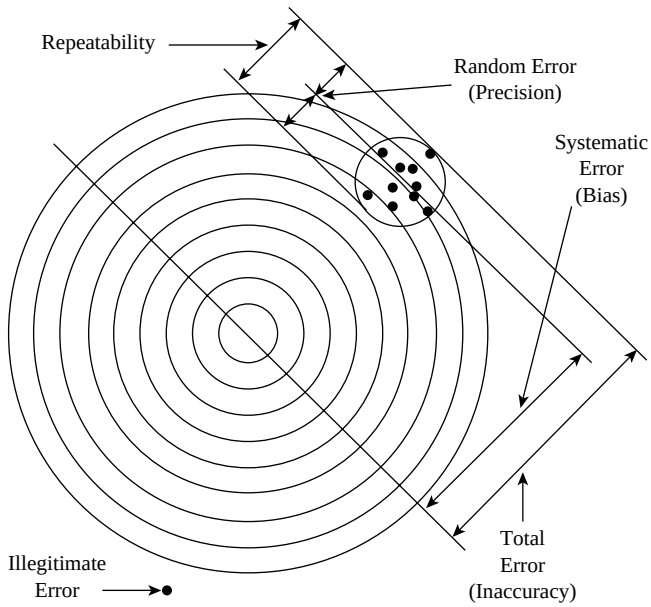

FIG. 1.4b
Accuracy terminology.

The distance between the mean impact of the nine bullets and the bull's-eye of the target is the *systematic error.* This error (caused by the wind or by the faulty adjustments of the sights) is repeatable and can be eliminated (in case of sensors, by calibration or by rezeroing; in case of the shooter, by waiting until the wind stops or by readjusting the sights). This error is not related to the shooter's inability to duplicate his shots. Systematic error is also referred to as *bias*, which is the systematic displacement of the measured value from the true one. It can be reduced by recalibrating the sensor against a reference standard, such as a calibrated (standard) thermal element, a known composition analytical sample, or dead weights.

The shot in the lower left-hand corner of the target is an illegitimate error, which is caused by blunders and can be totally eliminated.

The total error in a measurement can thus be defined as *the sum of the random error and the systematic error or bias.* If the purpose of an installation is to maintain the process conditions at previously experienced levels, and there is no interest in their true values, then the goal is to reduce the random error, without paying much attention to the remaining bias. In many industrial installations, such a repeatable (but inaccurate) measurement is sufficient.

Conversely, if the interest is in determining the true value of the measurement, because the installation serves such absolute purposes as accounting or quality control, the repeatable measurement is insufficient, and attention must be concentrated on absolute (total) accuracy. This can be obtained only through the reduction of both the random and the systematic errors, which is usually achieved by recalibration.

THE ACCURACY STATEMENT

The accuracy of a product category (sensors, transmitters, and so on) is established on the basis of testing large numbers of these products. For the more important sensors, the accuracy statements[1] should also include information on testing. An example of such a statement is quoted below from a National Bureau of Standards Calibration Certificate for a turbine flowmeter:

> *The results given are the arithmetic mean of ten separate observations, taken in groups of five successive runs on two different days. The reported values have an estimated overall uncertainty of ±0.13%, based on a standard error of ± 0.01% and an allowance of ±0.1% for possible systematic error.*

Figure 1.4a illustrates the results of such a test. In that test, the precision (half of repeatability) of 68% of the devices tested has been found to be ±1% of the true value, while, for 95% of the devices, it fell within ±2%, and, for all 100% of the devices, it amounted to ±3%. The total error (total uncertainty) is the sum of precision plus bias, which is the systematic error of the bell curve itself. Because the bias can be reduced by calibration and rezeroing, but the precision (or repeatability) cannot, it would be desirable if manufacturers identified both of these values. Manufacturers should also state if the basis of this data is 68, 95, or 100% of the devices tested. To allow the I&C profession to mature, manufacturers should eliminate "specmanship" from their sales literature, so that users can "compare apples with apples" when making a selection.

FLOW MEASUREMENT EXAMPLE

Figure 1.4c illustrates three flow sensors installed in series in the same process pipe, with each measurement signal being totalized. All three flow sensors are sized for the same full range of 100 GPM (380 l/min) flow rate. The goal of this example is to illustrate how the total system error is determined at the flow rates of 20 GPM (76 l/min) and 80 GPM (304 l/min) in two different cases. In Case 1, the basic assumption is that the component errors are additive. In Case 2, the assumption is that the total system error will be the error of the least precise component in the system. Errors introduced by counter-totalizers, which is usually one count, will be neglected.

For the purposes of the example of Figure 1.4c, the magnetic flowmeter, transmitters, and integrators will all have ±0.5% full-scale (FS) error. The orifice plate will be assumed to have an inaccuracy of ±0.5% of rate and the error of the turbine flowmeter will be assumed to have an inaccuracy of ±0.25%. (The orientation table in Chapter 2 [Table 2.1b] provides complete data for all flow sensors, including their performance characteristics.)

© 2003 by Béla Lipták

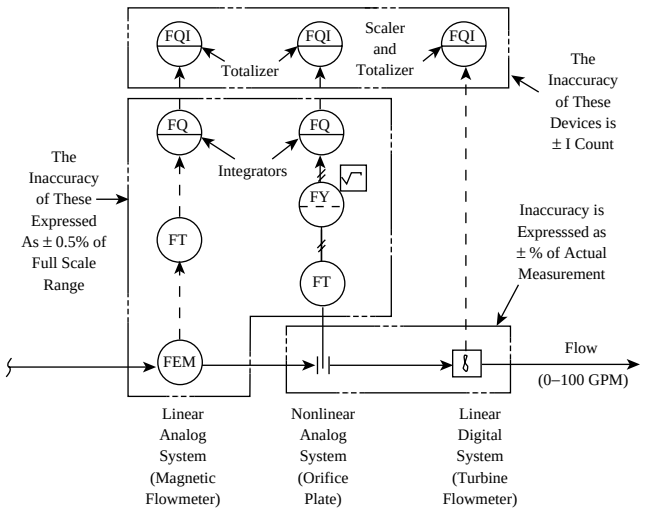

FIG. 1.4c
Errors of the components of three different flow totalization loops.

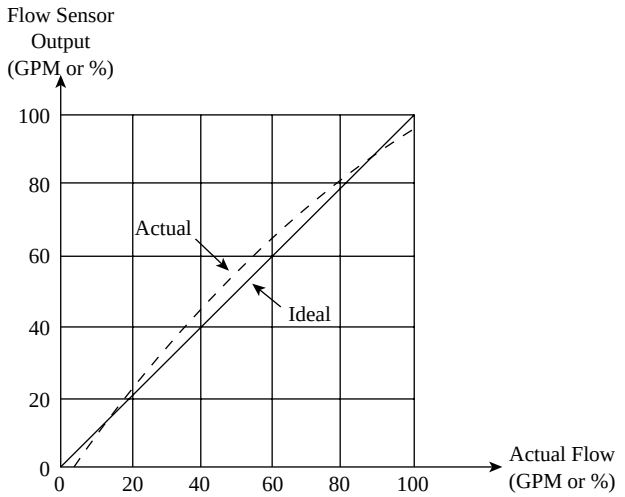

FIG. 1.4d
Performance of a linear analog flow sensor, such as a magnetic flowmeter.

In the more detailed discussion that follows, it will be shown that the overall system error can be much greater than the component errors. It will be shown that, at 20% of full-scale flow, the error of a turbine flowmeter will be around 0.25% of actual flow, the error of a magnetic flowmeter might range from 3% to 9% of actual flow, and the measurement error of an orifice-based measurement error will range from 5 to 12% of actual rate.

The ±0.5% maximum inaccuracy (some based on actual readings, others on full-scale readings) was selected to reflect the typical installations in the existing plants. Today, when "smart" transmitters and improved sensors are available, one can select more accurate system components, some with maximum errors of ±0.1% of actual span. Here, we will assume that the maximum error of any of the system components is ±0.5% and, based on that assumption, we will determine the resulting total system error. The performance of analog and digital, linear and nonlinear devices will be discussed separately.

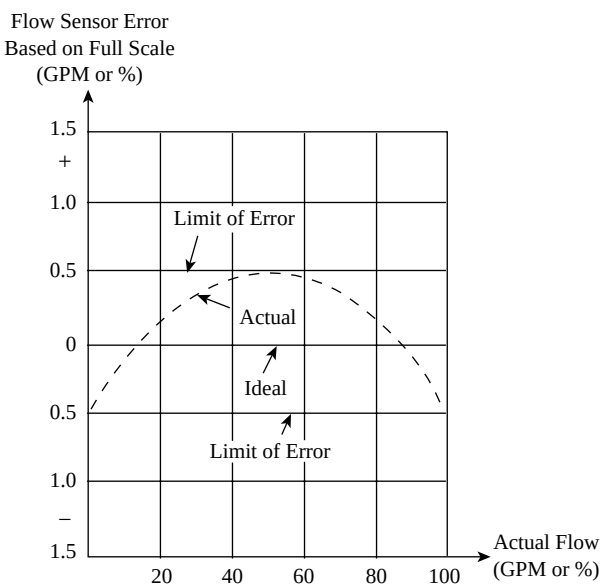

FIG. 1.4e
Error plot for a percentage of full-scale flow sensor.

Analog and Linear Devices—Traditional Magnetic Flowmeters

The performance of a linear analog flow sensor, such as a magnetic flowmeter, is shown in Figure 1.4d. The line marked "actual" represents the relationship between the actual flow and the output signal generated by the flow sensor. Figure 1.4e illustrates this error as a percentage of full scale (FS), with the error limits being ±0.5% FS.

In Figure 1.4f, the same ±0.5% FS sensor performance is illustrated, but against a vertical coordinate that is a percentage of actual flow units (instead of full scale). The specific detector performance is likely to be better at most points of its range than what these error limits would imply. The main message is that, for sensor with percent-FS performance, the measurement error increases as the flow rate drops, as shown in Figure 1.4g.

It should be noted that the performance described here is representative of the older designs of magnetic flowmeters, which continuously maintained their magnetic fields. In the newer designs, the field is cycled on and off, and the sensor can be automatically rezeroed, so the measurement error can be reduced. Therefore, the inaccuracy of these newer magnetic flowmeters can approach ±0.5% of actual flow.

Analog, Nonlinear—Orifice Plates

The orifice plate itself is rather accurate and is a percent-of-actual-flow sensor, having an error limit of ±0.5% of actual flow rate, as shown in Figure 1.4h.

© 2003 by Béla Lipták

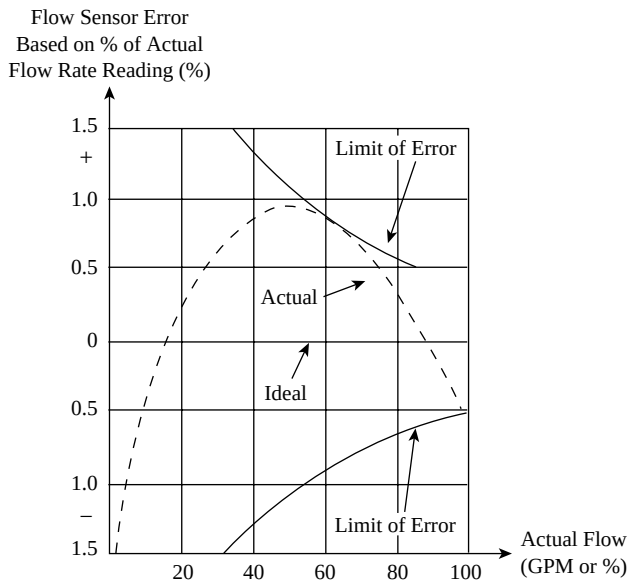

FIG. 1.4f
The error of a linear flow sensor shown in units of percentage of full-scale flow.

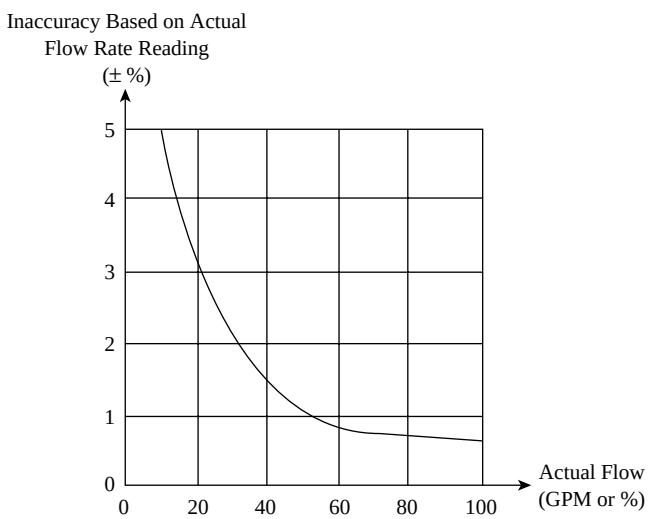

FIG. 1.4g
The error of a linear flow sensor shown in units of percentage of actual flow.

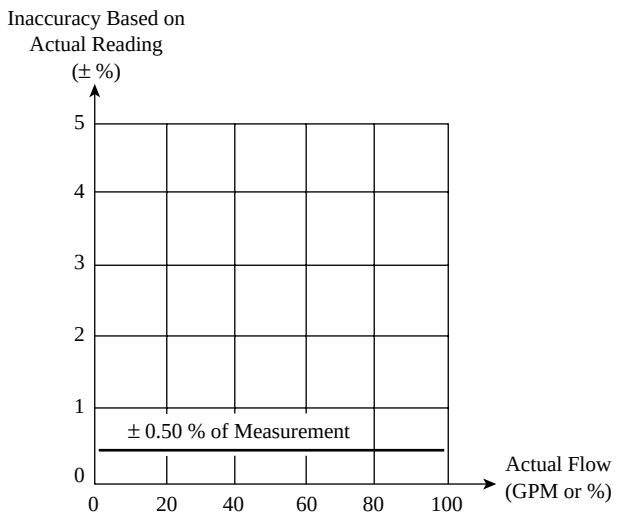

FIG. 1.4h
The error contribution of the orifice plate alone.

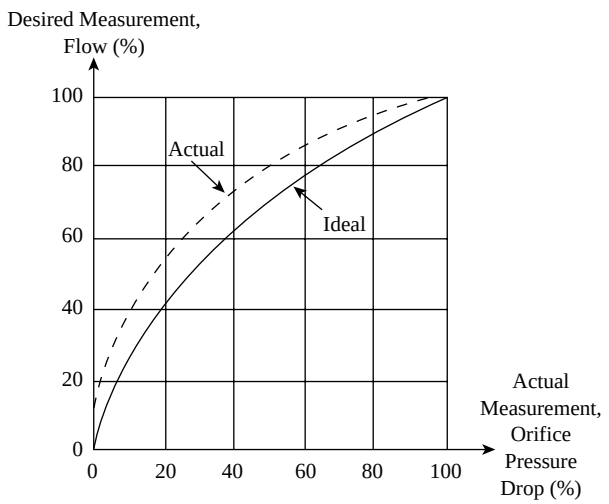

FIG. 1.4i
Performance of an orifice type nonlinear analog flow sensor.

The pressure drop through an orifice relates to the square of the flowing velocity or volumetric flow rate through the orifice plate. Figure 1.4i illustrates both, i.e., this ideal nonlinear (square root) relationship and the actual performance of a specific differential-pressure (d/p) cell used in an orifice type, nonlinear flow sensor.

To the error contribution of the orifice plate shown in Figure 1.4h (±0.5% of actual flow rate), one must add the error of the differential-pressure transmitter shown in Figure 1.4i (±0.5% FS). In addition, when the square root must be extracted before the signal can be integrated (Figure 1.4c), the error contribution (the *gain effect*) of this extraction must also be recognized. Figure 1.4j illustrates that this extraction of the square root improves the accuracy at the higher flow rates but degrades it as the flow rate is reduced.

Digital Linear—Turbine Flowmeter

The calibration of a turbine meter in terms of the K factor, given in units of pulses per gallon, is rather similar to the calibration curve of an orifice plate (Figure 1.4k). The inaccuracy of a turbine meter is also in units of percentage of the actual flow and is rather constant over a fairly wide range of flows. Turbine flowmeter inaccuracy can be improved by reducing the rangeability requirement of the unit (Figure 1.4l).

© 2003 by Béla Lipták

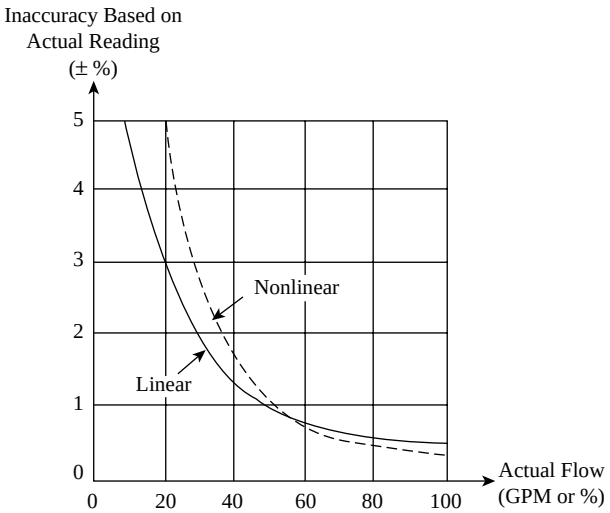

FIG. 1.4j
Comparing the inaccuracies of linear and a nonlinear flowmeter.

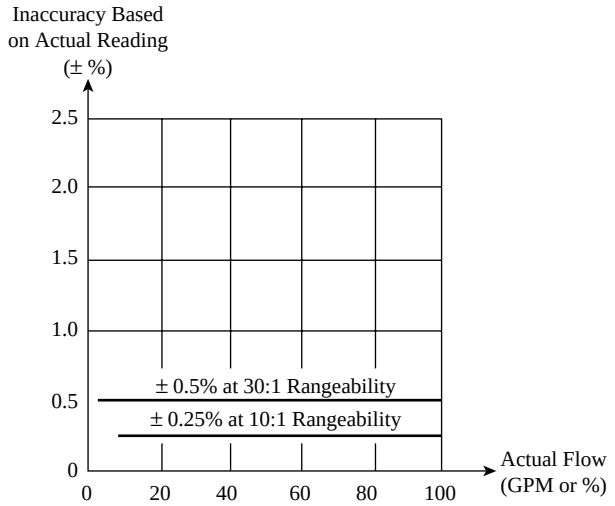

FIG. 1.4l
Turbine flowmeter inaccuracy as a function of rangeability.

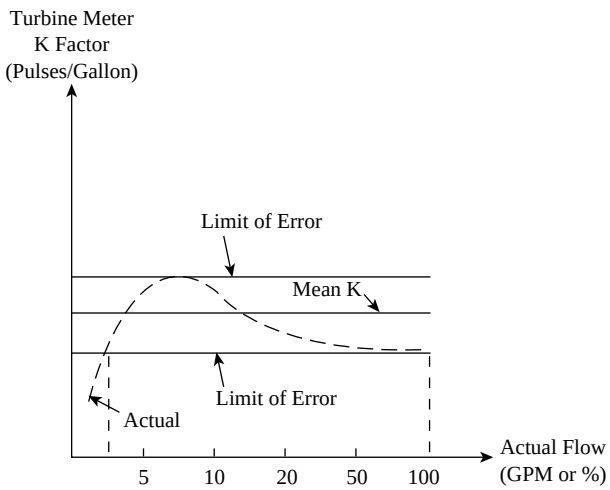

FIG. 1.4k
Turbine flowmeter calibration curve.

TABLE 1.4m
System Inaccuracy (Total Loop Error) in Units of Percentage of Actual Readings

Assumption Used to Estimate Accumulated System Inaccuracy	*Basis 1*		*Basis 2*	
	Operating Flow Rate (GPM)			
Type of flow detection loop	*20*	*80*	*20*	*80*
Analog, linear (magnetic flowmeter)	±9.0%	±1.5%	±3.0%	±0.5%
Analog, nonlinear (orifice flowmeter)	±12.0%	±2.0%	±5.0%	±0.5%
Digital, linear (turbine flowmeter)	±0.25%	±0.25%	±0.25%	±0.25%

Combined System Accuracy

Having reviewed the inaccuracies of the three flow sensors and the various loop components shown in Figure 1.4c, the next step is to evaluate the resulting total loop errors. There is no proven basis for determining the accumulative effect of component inaccuracies, and only an actual system calibration can reliably establish the total loop inaccuracy.

Still, we have learned the following from experience. We know that, the fewer the number of components in an analog measurement loop, the better the loop's performance. In digital systems, no additional error seems to be introduced by the addition of functional modules.

It has also been reported that the averaging of the outputs of several sensors that are detecting the same process variable will reduce the measurement error. These reports suggest that the error is reduced by the square root of the number of sensors in parallel. So, if two sensor outputs (each having a 1% error) are averaged, the error will be reduced to $1/\sqrt{2} = 0.7\%$ (and with three outputs, to 0.58%, with four outputs, to 0.5%, and so on).

Without actual system calibration, the evaluation of the overall loop accuracy must be based on some assumptions. Table 1.4m summarizes the system inaccuracies for the three loops in Figure 1.4c at 20 and 80% of flow rate and by evaluating the accumulated effect of component inaccuracies on the basis of one of two assumptions:

Basis 1 — Here, it is assumed that the inaccuracy of each component is additive, and therefore the total loop inaccuracy is the sum of component inaccuracies (a very conservative basis).

Basis 2 — Here, the assumption is that the system inaccuracy is the same as the inaccuracy of the least accurate component

© 2003 by Béla Lipták

and therefore other inaccuracies can be neglected (a very optimistic assumption).

If Basis 1 is accepted for evaluating the total system error, an orifice-type installation operating at 20% of full-scale flow will have an error of ±12% of the reading, although the inaccuracy of any component in the loop does not exceed ±0.5% FS.

The data in Table 1.4m is based on the performance of conventional d/p transmitters and on conventional magnetic flowmeters. With the newer, pulsed DC magnetic flowmeters, the error can be reduced to ±0.5% of actual flow over a 10:1 range. Similarly, if the intelligent, multiple-range d/p cells are used, orifice measurement error can be reduced to ±1% of actual flow over a 10:1 range.[2] To achieve this level of performance, it is necessary to automatically switch the d/p cell span from its "high" to its "low" setting, based on the actual flow measurement.

If the conventional magnetic flowmeters and d/p cells are considered, and if they are evaluated on a basis that is slightly more conservative than Basis 2 but less conservative than Basis 1, the resulting loop errors are as shown in Figure 1.4n.

From the data in Table 1.4m and Figure 1.4n, it can be concluded that neither error nor inaccuracy is by any means a clearly defined single number and that the required rangeability of the measurement has a substantial impact on performance. Therefore, a meaningful accuracy statement should answer the following questions: (1) What portion of the total error is the precision (random error) of the sensor? (2) Is the sensor error based on full scale (FS) or on actual reading (AR)? (3) Over what range of measurement values is the error statement applicable?

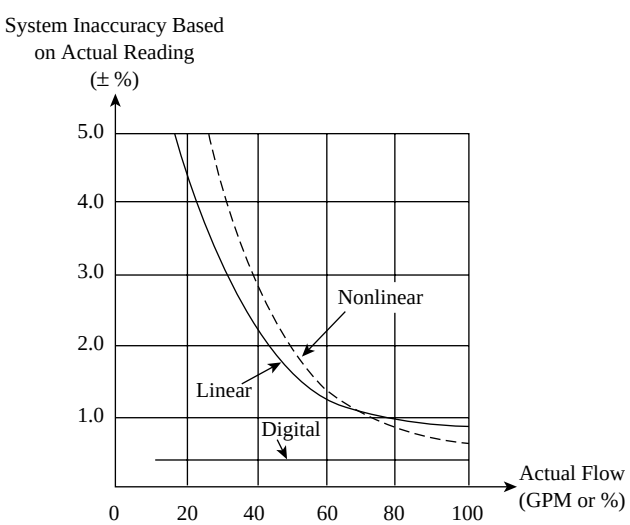

FIG. 1.4n

Total loop inaccuracies as a function of sensor type and flow rate, calculated on the basis of equation 1.4(1), where the total loop error is obtained by taking the square root of the sum of the component errors squared. (Accuracy in simple flow measurement. TI-1-30a. The Foxboro Company.)

TEMPERATURE AND PRESSURE EFFECTS

If a sensor such as a d/p cell has been tested at temperatures and pressures that differ from the operating temperature and pressure, this will affect the total error. The total error includes the d/p cell error (E), which is determined under atmospheric ambient conditions. Therefore, E reflects the linearity, repeatability, and hysteresis errors of the sensor.

For the purposes of this example, it is assumed that E = ±0.2% of actual span. Other factors that affect the total error include the zero (T_z) and span shifts (T_s) that might occur as a result of temperature variations. For a temperature variation of 100°F (55°C), T_z is assumed to be ±0.5% of maximum range, while T_s is assumed to be ±0.5% of actual reading.

The effect of changes in static pressure on the zero and span are noted by P_z and P_s. They are evaluated as the consequence of the physical distortion caused by 2000 psig (138 bars) of operating pressure. For the purposes of this example, it will be assumed that P_z = ±0.25% of maximum range, and P_s = ±0.5% of actual reading.

For the purposes of this example, assume a d/p cell with a maximum range of 0 to 750 in (0 to 19 m) H_2O and an actual span of 0 to 100 in (0 to 2.54 m) H_2O. It is further assumed that the actual operating temperature of the d/p cell is within 50°F (18°C) of the temperature at which the unit was calibrated and that the actual operating pressure is 1000 psig (69 bars). When the process measurement is 100 in. (2.54 m) H_2O, the above assumptions will result in the following error components:

E = ±0.2%
T_z = 0.5 (750 in./100 in.) (50°F/100°F) = ±1.875%
T_s = 0.5 (50°F/100°F) = ±0.25%
P_z = 0.25 (1000 psig/2000 psig) (750 in./100 in.) = ±0.9375%
P_s = 0.5 (1000 psig/2000 psig) = ±0.25%

If we calculate the total error (E_t) as being the square root of the sum of the square of the individual errors, the result is:

$$E_t = \sqrt{(0.2^2 + 1.875^2 + 0.25^2 + 0.9375^2 + 0.25^2)} = \pm 2.13\% \qquad \textbf{1.4(1)}$$

From the above example, one might note that the largest contributions to the total error are the zero shifts caused by the pressure and temperature differences between the calibration and the operating conditions. These errors can be reduced by selecting a d/p cell with a maximum range that is closer to the actual reading. One might also note that the total error (E_t) would have been even higher if the actual measurement did not correspond to 100% of the actual span (100 in H_2O), but only some fraction of it.

It should also be noted that the above E_t value is not the total measurement error of the loop but only the error

© 2003 by Béla Lipták

contribution of the d/p cell. Finally, one should note that one advantage of the "smart" transmitters is their ability to reduce the pressure and temperature effects on the span and zero. Therefore, if E is ±0.1% in an intelligent transmitter, the total error E_t can be kept within about ±0.3%.

REPEATABILITY VS. TOTAL ERROR

Based on the information presented above, the following qualitative conclusions can be drawn:

1. Inaccuracy is likely to be improved by reducing the number of components in a measurement loop.
2. Inaccuracy statements are meaningful only when given in combination with rangeability. The wider the rangeability required (expected load variations), the more inaccurate the measurement is likely to be. Furthermore, the rangeability effect on digital systems is the least; it increases when linear analog system are used, and it is the highest in case of nonlinear analog systems.
3. On nonaccounting systems, the interest is focused on repeatability (random error) and not on total inaccuracy. The repeatability of most measurement loops is several-fold better than their total error.
4. Instrumentation worth installing is usually also worth calibrating. In this regard, several points should be made: (a) The accuracy of a multicomponent system is unknown unless it is calibrated as a system. (b) The calibration equipment used must be at least three times more accurate than the system being calibrated. (c) Periodic recalibration is a prerequisite to good control.
5. Instrumentation worth installing should also be worth keeping in good condition. The performance of all sensors is affected by corrosion, plugging, coating, and process property variations. Therefore, scheduled maintenance is required to guarantee reliable operation.

In summary, (a) inaccuracy should be stated as a function of rangeability, (b) multicomponent systems require system calibration, and (c) maintaining good performance requires periodic recalibration and scheduled maintenance.

References

1. Kemp, R. E., *Accuracy for Engineers*, Instrumentation Technology, Inc., Painesville, Ohio.
2. Rudbäck, S., Optimization of orifice plates, venturies and nozzles, *Meas. Control*, June 1991.

Bibliography

Applicable standards: DIN/IEC Standard #770 and ASME PTC19.1.

Englund, D. R., Loading Effects in Measurement Systems, *Instrument and Control Syst.*, February 1970, 63–68.

Shinskey, F. G., *Estimating System Accuracy*, Foxboro Publication #413–5, Invensys Systems, Inc., Foxboro, MA.

Taylor, B. N. and Kuyatt, C. E., *Guidelines for Evaluating and Expressing the Uncertainty of NIST Measurement Results*, NIST Technical Note 1297, NIST, Gaithersburg, MD, 1994.

Vom Berg, H., What is accuracy? *Meas. Control*, April 1991.

© 2003 by Béla Lipták

1.5 Uncertainty Calculations

R. H. DIECK (2003)

The purpose of this section is to outline the fundamental methods of measurement uncertainty analysis for use as an objective estimator of data quality. These methods apply to all test, evaluation, and process data secured by a measurement instrument or system. Some examples are given to clarify the application of the principles presented.

UNCERTAINTY AND ERROR

Measurements are made so that the resulting data may be used for decision-making. In fact, the most fundamental definition of "good" data is "data that are applicable, or useful, for drawing conclusions or making decisions." Because of this, no test or evaluation data should be presented or used without including its measurement uncertainty. It is a properly evaluated measurement uncertainty that provides the information needed to properly assess the usefulness of data. For data to be useful, it is necessary that their measurement errors be small in comparison to the changes or effect under evaluation. The actual measurement error is unknown and unknowable. Measurement uncertainty estimates its limits with some confidence.

Therefore, *measurement uncertainty* may be defined as the limits to which a specific error or system error may extend with some confidence. The most commonly used confidence in uncertainty analysis is 95%, but other confidences may be employed where appropriate. In this section, all examples will be at 95% confidence.

Error is most often defined as the difference between the measured value of one data point and the true value of the measurand. That is:

$$E = (measured) - (true) \qquad \textbf{1.5(1)}$$

where

E = measurement error
measured = value obtained by a measurement
true = true value of the measurand

It is possible to estimate only the expected limits to an error at some confidence. The most common method for estimating those limits is to use the *normal distribution*.[1]

For an infinite population ($N = \infty$), the standard deviation, σ, would be used to estimate the expected limits of a particular error with some confidence. That is, the average, plus or minus 2σ divided by the square root of the number of data points, would contain the true average, μ, 95% of the time.

However, in test measurements, one typically cannot sample the entire population and must make do with a sample of data points. The sample standard deviation, S_X, is then used to estimate σ_X. For a large data set (defined as having 30 or more degrees of freedom[1]) $\pm 2S_X$ divided by the square root of the number of data point e reported average contains the true average, μ, 95% of the time. That S_X divided by the square root of the number of data points in the reported average, M, is called the *standard deviation* of the average (sometimes also called the *random uncertainty*) and is written as

$$S_{\bar{X}} = \sqrt{\frac{\sum_{i=1}^{N}(X_i - \bar{X})^2}{N-1}} \Big/ \sqrt{M} = S_X/\sqrt{M} \qquad \textbf{1.5(2)}$$

where

$S_{\bar{X}}$ = standard deviation of the average; the sample standard deviation of the data divided by the square root of M
S_X = sample standard deviation
$\bar{X}$ = sample average, that is,

$$\bar{X} = \sum_{i=1}^{M}(X_i/N) \qquad \textbf{1.5(3)}$$

X_i = ith data point used to calculate the sample standard deviation and the average
N = number of data points used to calculate the sample standard deviation
$(N - 1)$ = degrees of freedom of S_X and $S_{\bar{X}}$
M = the number of data points in the reported average test result

Note in Equation 1.5(3) that, usually, $N = M$. This is not a requirement, however. N does not necessarily equal M. It is possible to obtain S_X from historical data with many degrees of freedom ($(N - 1)$ greater than 30) and to take only M data points in a specific test. The test result, or average, would therefore be based on M measurements, and the standard deviation of the average could still be calculated with Equation 1.5(3). In that case, there would be two averages. One average

© 2003 by Béla Lipták

would be from the historical data used to calculate the sample standard deviation, and the other would be the average test result for M measurements.

In summary, the error for any particular error source is unknown and unknowable. To use data for decisions, it is necessary to estimate the limits to which a particular error may extend with some confidence. This estimate is called the *uncertainty.* Many are familiar with the term *accuracy.* However, *accuracy* is sometimes ambiguous. For example, if an experimenter needed an instrument with twice the accuracy of ±1%, would that be ±0.5% or ±2%? For this reason, this section will use the term *uncertainty* throughout to describe the quality of test data.

CLASSIFYING ERROR SOURCES AND THEIR UNCERTAINTIES

When estimating the limits of errors, their sources may be grouped into classifications to ease their understanding. The most common error source and uncertainty classifications now utilized are the International Standards Organization (ISO)[2] classifications and the United States/American Society of Mechanical Engineers (US/ASME)[3] classifications. The first groups error sources and their uncertainties by a type designation depending on whether there are data available to calculate the sample standard. The second classification groups errors and their uncertainties by their effects on the experiment or test data. That is, the US/ASME classification groups error sources and uncertainties by *random* and *systematic* types with subscripts used to denote whether there are data to calculate a standard deviation. For this reason, the US/ASME, or engineering, classification system groups usually are more useful and recommended for engineering applications.

The ISO Classification of Errors and Uncertainties

The ISO error and uncertainty classification system is not recommended in this section. However, the total uncertainty it yields is in complete agreement with the recommended classification system, the engineering classification system. In this system, errors and uncertainties are classified as Type A if there are data to calculate a sample standard deviation and Type B if there are not.[2]

The impact of multiple sources of error is estimated by root-sum-squaring their corresponding uncertainties. The equations follow.

ISO Type A Uncertainties and Errors For Type A, where data exist for the calculation of a standard deviation,

$$U_A = \left[\sum_{i=1}^{N_A} \left(\theta_i U_{A_i} \right)^2 \right]^{1/2} \qquad \textbf{1.5(4)}$$

where

U_{A_i} = standard deviation (based on data) of the average for uncertainty source i of Type A each with its own degrees of freedom (U_A is in units of the test or measurement result. It is an $S_{\bar{X}}$).
N_A = number of parameters of Type A uncertainty
θ_i = sensitivity (or influence coefficient) of the test or measurement result, R, to the ith Type A uncertainty

The uncertainty of each error source is in units of that source. When multiplied by the sensitivity for that source, it is converted to that uncertainty in result units. The effects of several error sources may be estimated by root-sum-squaring their uncertainties, as they are now all in the same units. The sensitivities, θ_i, are obtained for a measurement result, R, which is a function of several parameters, P_i. The equations follow.

R = the measurement result where
$R = f(P_1, P_2, P_3 ... P_N)$
P = a measurement parameter used to calculate the result, R

$$\theta_i = \frac{\partial R}{\partial P_i}$$

Obtaining the θ_i is often called error propagation or uncertainty propagation.

ISO Type B Uncertainties and Errors For Type B, where there are no data to calculate a standard deviation,

$$U_B = \left[\sum_{i=1}^{N_B} \left(\theta_i U_{B_i} \right)^2 \right]^{1/2} \qquad \textbf{1.5(5)}$$

where

U_{B_i} = standard deviation of the average for uncertainty source i of Type B. (U_B is in units of the test or measurement result, R. It is an $S_{\bar{X}}$. This standard deviation of the average is an estimate and not based on data.)
N_B = number of parameters with a Type B uncertainty
θ_i = sensitivity of the test or measurement result to the ith Type B uncertainty R

For these uncertainties, it is assumed that the U_{B_i} represent one standard deviation of the average for one uncertainty source with an assumed normal distribution of errors. Here, the degrees of freedom associated with this standard deviation (also standard deviation of the average) is assumed to be infinity.

Note that θ_i, the sensitivity of the test or measurement result to the ith Type B uncertainty, is actually the change in the result, R, that would result from a change of the size of the Type B uncertainty in the ith input parameter used to calculate that result.

The degrees of freedom from both the U_{A_i} and the U_{B_i} are needed to compute the degrees of freedom of the combined

© 2003 by Béla Lipták

total uncertainty. The degrees of freedom for this total uncertainty are needed to select a proper Student's *t* for the confidence of interest, usually 95%. Those degrees of freedom are calculated with the Welch–Satterthwaite approximation. The general formula for degrees of freedom[4] is

$$df_R = \nu_R = \frac{\left[\sum_{i=1}^{N}\left(S_{\bar{X}_i}\right)^2\right]^2}{\left[\sum_{i=1}^{N}\frac{\left(S_{\bar{X}_i}\right)^4}{(\nu_i)}\right]} \qquad \textbf{1.5(6)}$$

where

$df_R = \nu_R$ = degrees of freedom for the result

ν_i = the degrees of freedom of the *i*th standard deviation of the average

For the ISO model, Equation 1.5(6) becomes

$$df_{R,ISO} = \nu_{R,ISO} = \frac{\left[\sum_{i=1}^{N_A}\left(\theta_i U_{A_i}\right)^2 + \sum_{i=1}^{N_B}\left(\theta_i U_{B_i}\right)^2\right]^2}{\left[\sum_{i=1}^{N_A}\frac{\left(\theta_i U_{A_i}\right)^4}{(\nu_i)} + \sum_{i=1}^{N_B}\frac{\left(\theta_i U_{B_i}\right)^4}{(\nu_i)}\right]} \qquad \textbf{1.5(7)}$$

The degrees of freedom calculated with Equation 1.5(7) is often a fraction. The *U.S. National Standard on Test Uncertainty*[5] recommends that this be truncated to the next lower whole number to be conservative.

In computing a total uncertainty, the uncertainties noted by Equations 1.5(5) and 1.5(6) are combined. For the ISO model,[3] this is calculated as

$$U_{R,ISO} = \pm t_{95}\left[(U_A)^2 + (U_B)^2\right]^{1/2} \qquad \textbf{1.5(8)}$$

where t_{95} = Student's *t* for ν_R degrees of freedom

Student's *t* may be obtained from Table 1.5a.

Note that alternative confidences are permissible; 95% is recommended by the ASME,[5] but 99% or 99.7% (or any other confidence) is obtained by choosing the appropriate Student's *t*. However, 95% confidence is recommended for uncertainty analysis.[5]

In all of the above, the errors were assumed to be independent. Independent sources of error are those for which an error in a measurement in one source cannot be used to predict the magnitude or direction of an error from the other, independent, error source. Nonindependent error sources are related. That is, if it were possible to know the error in a measurement from one source, one could calculate or predict an error magnitude and direction from the other nonindependent error source. These are sometimes called *dependent error sources*. Their degree of dependence may be estimated with the linear correlation coefficient. If there are some nonindependent errors, whether Type A or Type B, Equation 1.5(8) becomes[6]

$$U_{R,ISO} = t_{95}\left\{\sum_{T=A}^{B}\sum_{i=1}^{N_{i,T}}\left[(\theta_i U_{i,T})^2 + \sum_{j=1}^{N_{j,T}}\theta_i\theta_j U_{(i,T),(j,T)}(1-\delta_{i,j})\right]\right\}^{1/2} \qquad \textbf{1.5(9)}$$

where

$U_{i,T}$ = *i*th elemental uncertainty of Type T (can be Type A or B)

$U_{R,ISO}$ = total uncertainty of the measurement or test result

θ_i = sensitivity of the test or measurement result to the *i*th Type T uncertainty

θ_j = sensitivity of the test or measurement result to the *j*th Type T uncertainty

$U_{(i,T),(j,T)}$ = covariance of $U_{i,T}$ on $U_{j,T}$

$$= \sum_{l=1}^{K} U_{i,T}(l)U_{j,T}(l) \qquad \textbf{1.5(10)}$$

= sum of the products of the elemental systematic uncertainties that arise from a common source (l)

l = an index or counter for common uncertainty sources

K = number of common source pairs of uncertainties

$\delta_{i,j}$ = Kronecker delta ($\delta_{i,j} = 1$ if $i = j$, and $\delta_{i,j} = 0$ otherwise[6])

TABLE 1.5a

Student's t Statistic for 95% Confidence, t_{95}, Degrees of Freedom, v. This is Frequently Written as $t_{95,v}$

ν	t_{95}	ν	t_{95}	ν	t_{95}
1	12.706	11	2.201	21	2.080
2	4.303	12	2.179	22	2.074
3	3.182	13	2.160	23	2.069
4	2.776	14	2.145	24	2.064
5	2.571	15	2.131	25	2.060
6	2.447	16	2.120	26	2.056
7	2.365	17	2.110	27	2.052
8	2.306	18	2.101	28	2.048
9	2.262	19	2.093	29	2.045
10	2.228	20	2.086	≥30	2.000

© 2003 by Béla Lipták

This ISO equation will yield the same total uncertainty as the engineering equation, but the ISO classification does not provide insight into how to improve an experiment's or test's uncertainty—that is, whether to possibly take more data because the random uncertainties are too high or calibrate better because the systematic uncertainties are too large. The engineering classification presented next is therefore the recommended approach.

Engineering Classification of Errors and Uncertainties

The engineering classification recognizes that experiments and tests have two major types: systematic and random. Their corresponding estimates of the limits of those errors are the systematic uncertainties and random uncertainties, respectively.

Random Errors and Uncertainties The general expression for random uncertainty is the $(1\,S_{\bar{X}})$ standard deviation of the average[9]

$$S_{\bar{X},R} = \left[\sum_{T=A}^{B}\sum_{i=1}^{N_{i,T}}\left(\theta_i S_{\bar{X}_{i,T}}\right)^2\right]^{1/2} = \left[\sum_{T=A}^{B}\sum_{i=1}^{N_{i,T}}\left(\theta_i S_{X_{i,T}}\Big/\sqrt{M_{i,T}}\right)^2\right] \qquad \textbf{1.5(11)}$$

where

$S_{X_{i,T}}$ = sample standard deviation of the ith random error source of Type T

$S_{\bar{X}_{i,T}}$ = random uncertainty (standard deviation of the average) of the ith parameter random error source of Type T

$S_{\bar{X},R}$ = random uncertainty of the measurement or test result

$N_{i,T}$ = total number of random uncertainties, Types A and B, combined

$M_{i,T}$ = number of data points averaged for the ith error source, Type A or B

Note that $S_{\bar{X},R}$ is in units of the test or measurement result as a result of the use of the sensitivities, θ_i. Here, the elemental random uncertainties have been root-sum-squared with due consideration for their sensitivities, or influence coefficients. Since these are all random uncertainties, there is, by definition, no correlation in their corresponding error data, so these can always be treated as independent uncertainty sources.

Systematic Errors and Uncertainties The systematic uncertainty of the result, B_R, is the root-sum-square of the elemental systematic uncertainties with due consideration for those that are correlated.[6] The general equation is

$$B_R = \left\{\sum_{T=A}^{B}\sum_{i=1}^{N_T}\left[(\theta_i B_{i,T})^2 + \sum_{j=1}^{N_T}\theta_i\theta_j B_{(i,T),(j,T)}(1-\delta_{i,j})\right]\right\}^{1/2} \qquad \textbf{1.5(12)}$$

where

$B_{i,T}$ = ith parameter elemental systematic uncertainty of Type T

B_R = systematic uncertainty of the measurement or test result

N = total number of systematic uncertainties

θ_i = sensitivity of the test or measurement result to the ith systematic uncertainty

θ_j = sensitivity of the test or measurement result to the jth systematic uncertainty

$B_{(i,T),(j,T)}$ = covariance of B_i on B_j

$$= \sum_{l=1}^{M} B_{i,T}(l)B_{j,T}(l) \qquad \textbf{1.5(13)}$$

= sum of the products of the elemental systematic uncertainties that arise from a common source (l)

l = an index or counter for common uncertainty sources

$\delta_{i,j}$ = Kronecker delta ($\delta_{i,j} = 1$ if $i = j$, and $\delta_{i,j} = 0$ otherwise[6])

Here, each $B_{i,T}$ and $B_{j,T}$ are estimated as $2\,S_{\bar{X}}$ for an assumed normal distribution of errors at 95% confidence with infinite degrees of freedom. If there are less than an infinite number of degrees of freedom, the appendix of Reference 5 details that analysis.

The random uncertainty, Equation 1.5(11), and the systematic uncertainty, Equation 1.5(12), must be combined to obtain a total uncertainty,

$$U_{R,ENG} = t_{95}\left[(B_R/2)^2 + (S_{\bar{X},R})^2\right]^{1/2} \qquad \textbf{1.5(14)}$$

Note that B_R is in units of the test or measurement result, as was $S_{\bar{X},R_i}$.

The degrees of freedom will need to be determined for the engineering system total uncertainty. It is done with the Welch–Satterthwaite approximation, the general form of which is Equation 1.5(10). The specific formulation here is

$$df_R = \nu_R = \frac{\left\{\sum_{T=A}^{B}\left[\sum_{i=1}^{N_{S_{\bar{X}_i,T}}}\left(S_{\bar{X}_i,T}\right)^2 + \sum_{j-1}^{N_{B_j,T}}\left(\frac{\theta_j B_{j,T}}{2}\right)^2\right]\right\}}{\left\{\sum_{T=A}^{B}\left[\sum_{i=1}^{N_{S_{\bar{X}_i,T}}}\frac{\left(S_{\bar{X}_i,T}\right)^4}{\nu_{i,T}} + \sum_{j-1}^{N_{B_j,T}}\frac{\left(\theta_j B_{j,T}/2\right)^4}{\nu_j}\right]\right\}} \qquad \textbf{1.5(15)}$$

where

$N_{S_{\bar{X}_i,T}}$ = number of random uncertainties of Type T

$N_{Bj,T}$ = number of systematic uncertainties of Type T

© 2003 by Béla Lipták

$\nu_{i,T}$ = degrees of freedom for the ith uncertainty of Type T
$\nu_{\varphi,T}$ = infinity for all systematic uncertainties

TOTAL UNCERTAINTY

ISO Total Uncertainty

The ISO total uncertainty, which ISO refers to as the *expanded uncertainty*, for independent uncertainty sources (the most common) is [from Equation 1.5(8)]

$$U_{ISO} = \pm K\left[(U_A)^2 + (U_B)^2\right]^{1/2} \qquad \textbf{1.5(16)}$$

The ISO uncertainty with some non-independent uncertainty sources is [from Equation 1.5(9)]

$$U_{R,ISO} = \pm\left\{\sum_{T=A}^{B}\sum_{i=1}^{N_{i,T}}\left[(\theta_i U_{i,T})^2 + \sum_{j=1}^{N_{j,T}}\theta_i\theta_j U_{(t,T),(j,T)}(1-\delta_{i,j})\right]\right\}^{1/2} \qquad \textbf{1.5(17)}$$

Engineering Total Uncertainty

The engineering equation for total uncertainty for independent uncertainty sources (the most common) is [from Equation 1.5(14)]

$$U_{R,ENG} = \pm t_{95}\left[(B_R/2)^2 + (S_{\bar{X},R})^2\right]^{1/2} \qquad \textbf{1.5(18)}$$

Here, just the first term of Equation 1.5(17) is needed, as all the systematic uncertainty sources are independent.

The engineering equation for uncertainty for nonindependent uncertainty sources (those with correlated systematic uncertainties) is also Equation 1.5(18), but it is necessary to also to use the full expression for B_R [Equation 1.5(12)]

$$B_R = \left\{\sum_{T=A}^{B}\sum_{i=1}^{N_T}\left[(\theta_i B_{i,T})^2 + \sum_{j=1}^{N_T}\theta_i\theta_j B_{(i,T),(j,T)}(1-\delta_{i,j})\right]\right\}^{1/2} \qquad \textbf{1.5(19)}$$

The number of degrees of freedom needed to define Student's t for Equations 1.5(16) through 1.5(19) is calculated with the Welch–Satterthwaite approximation, Equation 1.5(7) for the ISO system and Equation 1.5(15) for the engineering system.

It usually may be assumed that the degrees of freedom equal 30 or higher. In these cases, the equations for uncertainty simplify further by setting t_{95} equal to 2.000. This approach is recommended for a first-time user of uncertainty analysis procedures, as it is a fast way to get to an approximation of the measurement uncertainty.

CALCULATION EXAMPLE

In the following calculation example, all the uncertainties are independent, and are all in the units of the test result, temperature. More detailed examples are given in many of the references cited. Their review may be needed to assure a more comprehensive understanding of uncertainty analysis. Of particular importance is the concept of uncertainty propagation. This is needed when the uncertainties are for parameters that contribute to a calculated result.

It has been shown[7] that there is often little difference among the uncertainties calculated with the different models. The data from Table 1.5b[8] will be used to calculate measurement uncertainty with these two models. This data are all in temperature units, so the influence coefficients, or sensitivities, are all unity.

Note the use of subscripts "A" and "B" to denote where data exist to calculate a standard deviation. Also note that, in this example, all errors (and therefore uncertainties) are independent and that all degrees of freedom for the systematic uncertainties are infinity except for the reference junction, whose degrees of freedom are 12. Also note that B_R is calculated as

$$B_R = 2\left[\left(\frac{0.06}{2}\right)^2 + \left(\frac{0.07}{2.18}\right)^2 + \left(\frac{0.1}{2}\right)^2\right]^{1/2} = 0.13 \qquad \textbf{1.5(20)}$$

TABLE 1.5b
Test Measurement Uncertainties, F

Defined Measurement Process	*Systematic Uncertainty, B_i*	*Degrees of Freedom for B_i*	*Standard Deviation, $S_{X,i}$*	*Number of Data Points, N_i*	*Random Uncertainty, $S_{\bar{X},i}$*	*Degrees of Freedom for $S_{\bar{X},i}$*
Calibration of thermocouple	0.06_A	∞	0.3_A	10	0.095_A	9
Reference junction	0.07_B	12	0.1_A	5	0.045_A	4
Data acquisition	0.10_A	∞	0.6_A	12	0.73_A	11
RSS	$B_R = 0.13$	N/A	N/A	N/A	$S_{\bar{X},R} = 0.20$	N/A

© 2003 by Béla Lipták

Notice that the 0.07 is not divided by t but by its appropriate Student's t for 12 degrees of freedom. The use of "2" for Student's t is only appropriate for all degrees of freedom of 30 or more.[5]

Each uncertainty model will now be used to derive a measurement uncertainty.

ISO Uncertainty Calculation Example

For the U_{ISO} model we have, from Equation 1.5(13), the following expressions:

$$U_A = \left[(0.095)^2 + (0.045)^2 + (0.173)^2 + \left(\frac{0.07}{2.18}\right)^2\right]^{1/2} = 0.21 \qquad \textbf{1.5(21)}$$

$$U_B = \left[\left(\frac{0.06}{2}\right)^2 + \left(\frac{0.10}{2}\right)^2\right]^{1/2} = 0.058 \qquad \textbf{1.5(22)}$$

$$U_{R,ISO} = \pm K[(U_A)^2 + (U_B)^2]^{1/2} = \pm K[(0.21)^2 + (0.058)^2]^{1/2} \qquad \textbf{1.5(23)}$$

Here, remember that the 0.21 is the root sum square of the 1 $S_{\bar{X}}$ Type A uncertainties in Table 1.5b, and 0.058 is that for the 1 $S_{\bar{X}}$ Type B uncertainties. Also note that, in most cases, the Type B uncertainties have infinite degrees of freedom and represent an equivalent 2 $S_{\bar{X}}$. That is why they are divided by 2 to get an equivalent 1 $S_{\bar{X}}$. Where there are less than 30 degrees of freedom, one needs to divide by the appropriate Student's t that gave the 95% confidence interval. For the reference junction systematic uncertainty above, that was 2.18.

If K is taken as Student's t_{95}, the degrees of freedom must first be calculated. Remember that all the systematic components of Type B have infinite degrees of freedom except for the 0.07, which has 12 degrees of freedom. Also, all the B_i in Table 1.5a represent an equivalent 2 $S_{\bar{X}}$ except for 0.07, which represents 2.18 $S_{\bar{X}}$, as its degrees of freedom are 12 and not infinity. To use their data here, divide all of them except the 0.07 by 2, and divide the 0.07 by 2.18; they all now represent 1 $S_{\bar{X}}$ as do the random components. All Type A uncertainties, whether systematic or random in Table 1.5a, have degrees of freedom as noted in the table. The degrees of freedom for U_{ISO} is then

$$df_R = \nu_R = \frac{[(0.095)^2 + (0.045)^2 + (0.173)^2 + (0.06/2)^2 + (0.07/2.18)^2 + (0.10/2)^2]^2}{\left[\frac{(0.095)^4}{9} + \frac{(0.045)^4}{4} + \frac{(0.173)^4}{11} + \frac{(0.06/2)^4}{\infty} + \frac{(0.07/2(0.07/2.18)^4)^4}{12} + \frac{(0.10/2)^4}{\infty}\right]}$$

$$= 22.51 \approx 22 \qquad \textbf{1.5(24)}$$

t_{95} is therefore 2.07. $U_{R,ISO}$ is then

$$U_{R,ISO} = \pm 2.07[(0.21)^2 + (0.058)^2]^{1/2} = 0.45 \quad \text{for 95\% confidence} \qquad \textbf{1.5(25)}$$

Engineering Uncertainty Calculation Example

For the engineering System, $U_{R,ENG}$, model [Equation 1.5(18)], we have the following expression:

$$U_{R,ENG} = \pm t_{95}[(0.13/2)^2 + (0.20)^2]^{1/2} \qquad \textbf{1.5(26)}$$

Here, the (0.13/2) is the $B_R/2$, and the 0.20 is (as before) the random component. To obtain the proper t_{95}, the degrees of freedom need to be calculated just as in Equation 1.5(24). There, the degrees of freedom were 22, and $t_{95} = 2.07$. $U_{R,ENG}$ is then

$$U_{R,ENG} = \pm 2.07[(0.13/2)^2 + (0.20)^2]^{1/2} = 0.44 \quad \text{for 95\% confidence.} \qquad \textbf{1.5(27)}$$

This is essentially identical to $U_{R,ISO}$ [Equation 1.5(25)] within round-off errors and degrees of freedom approximations, as predicted.

SUMMARY

Although these formulae for uncertainty calculations will not handle every situation, they will provide a useful estimate of test or measurement uncertainty in most cases. For a more detailed treatment or specific applications of these principles, consult the references and bibliography.

References

1. Doebelin, E. O., *Measurement Systems, Application and Design,* 4th ed., McGraw-Hill, New York, 1990, 38ff.
2. ANSI/ASME PTC 19.1–1985, *Instruments and Apparatus,* Part 1, *Measurement Uncertainty,* ANSI, New York, 1985, 64.
3. *Guide to the Expression of Uncertainty in Measurement,* International Standards Organization, Geneva, 1993, 23.
4. Dieck, R. H., *Measurement Uncertainty, Methods and Applications,* 2nd ed., ISA, Research Triangle Park, NC, 1996, 45.
5. ANSI/ASME PTC 19.1–1998, *Instruments and Apparatus,* Part 1, *Measurement Uncertainty,* ANSI, New York, 1998.
6. Brown, K. K., Coleman H. W., Steele, W. G., and Taylor, R. P., Evaluation of correlated bias approximations in experimental uncertainty analysis, in *Proc. 32nd Aerospace Sciences Meeting & Exhibit,* Reno, NV, AIAA paper no. 94–0772, Jan. 10–13, 1996.
7. Strike, W. T. III and Dieck, R. H., Rocket impulse uncertainty; an uncertainty model comparison, in *Proc. 41st Int. Instrum. Symp.,* Denver, CO, May 1995.
8. Dieck, R. H., Measurement uncertainty models, in *Proc. 42nd Int. Instrum. Symp.,* San Diego, CA, May 1996.

© 2003 by Béla Lipták

Bibliography

Abernethy, R. B. et al., *Handbook of Uncertainty in Gas Turbine Measurement*, USAF AEDC-TR-73-5, U.S. Air Force, 1973 (adopted by ISA as its *Measurement Uncertainty Handbook*).

Abernethy, R. B. and Ringhiser, B., The history and statistical development of the new ASME-SAE-AIAA-ISO measurement uncertainty methodology, in *Proc. AIAA/SAE/ASME/ASME 21st Joint Propulsion Conf.*, Monterey, CA, July 8–10, 1985.

Dieck, R. H., *Measurement Uncertainty, Methods and Applications*, 3rd ed., ISA, Research Triangle Park, NC, 2002.

Steele, W. G., Ferguson, R. A. and Taylor, R. P., Comparison of ANSI/ASME and ISO models for calculation of uncertainty, in *Proc. 40th Int. Instrum. Symp.*, 1994, 410–438.

Strike, W. T., III and Dieck, R. H., Rocket impulse uncertainty; an uncertainty model comparison, in *Proc. 41st Int. Instrum. Symp.*, Denver, CO, May 1995.

Webster, J. G., *The Measurement, Instrumentation and Sensors Handbook*, Ed., CRC Press, Boca Raton, FL, 1999.

© 2003 by Béla Lipták

1.6 Configuring Intelligent Devices

J. BERGE (2003)

DESIGN FEATURE RECOMMENDATIONS

- Use permanently connected communications infrastructure.
- For the HART® Field Communications Protocol, use a handheld with large, user-friendly screen.
- Use device configuration templates.
- Use a fieldbus tool that requires no proprietary files from the host manufacturer.
- Be mindful of revisions when configuring fieldbus devices.

COSTS

A HART handheld, such as Smar International's HPC301, costs approximately U.S. $1000.

A FOUNDATION™ fieldbus host, such as the SYSTEM302, starts at U.S. $4000.

INTRODUCTION

Intelligent devices include "smart" instruments that have both an analog 4- to 20-mA signal with simultaneous digital communication, such as HART (Volume 3, Section 4.11), and fieldbus devices that are completely digital, such as FOUNDATION fieldbus (Volume 3, Section 4.12). Intelligence in these devices, along with networking and the right tools, can also be put to good use to improve maintenance practices.

Both FOUNDATION fieldbus and HART protocols are specifically designed for the configuration of field instruments and are therefore the most commonly used in the process industries. They both have special parameters for the specific purpose of device configuration, and both use the concept of device description (DD) files to inform a host device how to communicate these parameters with the device. This is a unique characteristic of these protocols that makes them highly suitable for instrumentation and control.

In the HART protocol, device parameter configuration is based on commands for reading and writing. There are three classes of commands: universal, common-practice, and specific. All HART devices support the universal commands, and most also support several common-practice commands. Together, the universal and common-practice commands cover most functions needed in a device. This enables a host to perform most device functions without access to the DD. Essentially, all devices also have a number of specific commands to access unique functionality. Either a DD or a special driver is required to communicate the special commands.

For FOUNDATION fieldbus device configuration parameters are arranged in a resource block and in transducer blocks. There are also function blocks, but these are used for control strategy building rather than device configuration. This distinction makes it easy to draw the line between device and strategy configuration. The block parameters are accessed using sophisticated communication services. A host needs to be loaded with the DD to be able to communicate with a device. In addition, to allow configuration of the device off-line, in advance, the capabilities file (CF) is required.

Range setting is perhaps the most important setting of a device based on a 4- to 20-mA signal such as used by a HART instrument. *Range* sets the scale for the 4- to 20-mA signal. Because FOUNDATION fieldbus devices communicate in floating-point mode and engineering units, there usually is no need to set a range. Calibration shall not be confused with range setting, since they are in fact different operations. For example, for a *transmitter* range setting means configuring the measured values at which the output shall be 4 and 20 mA, respectively. Calibration, on the other hand, means adjusting the reading from the sensor to match the correct value from a standard (Section 1.8). Range setting does not correct the sensor reading; it only affects the output scale.

To calibrate a transmitter, you must always apply a known input. Therefore, calibration cannot be done remotely. The expression *remote calibration* is often used erroneously to mean *remote range setting.* Some confusion exists in the marketplace as to what calibration is. This is a legacy from the era of analog devices in which calibration and range setting was done at the same time using the same set of potentiometers. For the HART protocol, calibration is usually called *trim* to distinguish it from range setting. FOUNDATION fieldbus avoids this confusion by calling range setting *scaling*. Still it is quite common in HART devices to change the range instead of calibrating the device when the sensor reading is wrong. The result is a correct 4- to 20-mA output, but any digital reading in the display or host will be wrong, which may lead to confusion.

© 2003 by Béla Lipták

CONFIGURATION TOOLS

FOUNDATION fieldbus devices are permanently connected via a network to a host in a convenient central location. HART devices, on the other hand, normally operate only using 4 to 20 mA, and a hand-held HART communicator is connected and communicates only when required. A FOUNDATION fieldbus host is therefore predominantly a stationary desktop computer, whereas a HART communicator is usually a portable device. However, portable interfaces for laptops exist for both HART and FOUNDATION fieldbus operation.

The handheld can be connected at any convenient point along the 4- to 20-mA wire as long as it is on the instrument side of the stipulated resistor (see Figure 1.6a). This connection is often done at the device itself, giving on-line access to information, configuration, remote monitoring, calibration and range setting, diagnostics, and maintenance.

The handheld can be either a dedicated text-based HART device or a HART interface for an organizer with a graphical user interface (GUI). Rapid development in the area of personal organizers has brought about tools that incorporate displays larger than three inches across and are capable of sophisticated graphics with a Windows-like appearance. They are also are very fast (see Figure 1.6b).

Fieldbus instruments are connected on the H1 field-level nework that ties in with a linking device on the HSE host-level network where the host computers with the configuration tool is (Figure 1.6c). This is a permanent connection where the network used for control, monitoring, and operation is also used for configuration and diagnostics, etc.

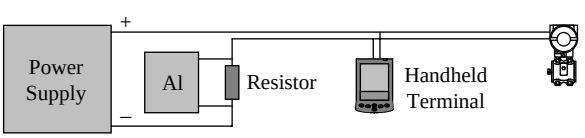

FIG. 1.6a
HART handheld connection.



FIG. 1.6b
HART pocket Configurator. (Courtesy of Smar International.)

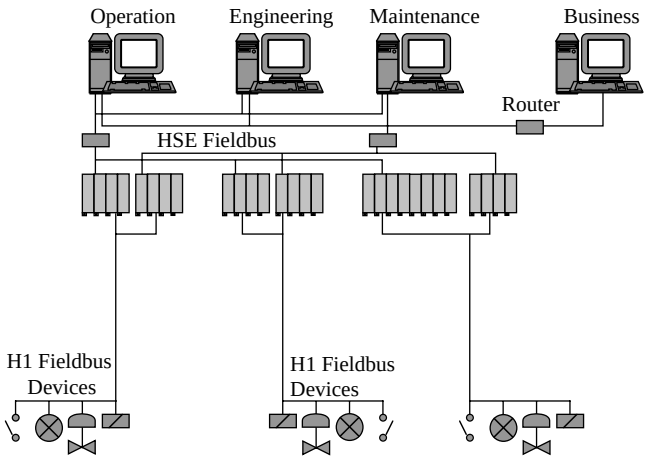

FIG. 1.6c
FOUNDATION™ fieldbus system architecture.



FIG. 1.6d
FOUNDATION™ fieldbus linking device. (Courtesy of Smar International.)

Linking device is typically one of many functions integrated in a single device. Usually the same device is responsible for powering the field instruments, etc. A linking device typically has several H1 ports and can be connected in a redundant scheme for high availability (Figure 1.6d).

For FOUNDATION fieldbus interoperability with the host is achieved through DD. By installing the device support files for a device, the host computer has the information required to communicate with the device and to allow the user to prepare a configuration in advance, even without being connected to the device. The files usually can be obtained from the manufacturer's site on the Internet. To guarantee interoperability, an open host uses only standard files to support any device. However, some tools may require proprietary files for each device to work, in which case a short list of approved devices applies.

© 2003 by Béla Lipták

DEVICE CONFIGURATION

HART devices are typically configured on line only, using a handheld unit communicating directly with the device. However, some handhelds also support off-line configuration for later download.

Although HART transmitters can operate in a purely digital mode, the 4- to 20-mA output is almost always used to deliver the process variable to the central controller. Setting the range of the transmitter is therefore required. The primary variable output settings are the most important part of the configuration. The lower range value (LRV) is the measured value at which the transmitter output will be 4 mA, and the upper range value (URV) is the input value at which the output will be 20 mA; i.e., 0 and 100% of range, respectively. Although LRV and URV are the proper terms, most call them *zero* and *span* instead. But span is really the difference between the URV and the LRV. The engineering unit can also be selected.

Range setting can be accomplished from the handheld by simply keying in the desired range values, regardless of input. This can even be done remotely and stored as an off-line configuration. Another method is to apply an input and (by pressing a button on the handheld or on the transmitter itself) informing the device that the applied input is to be the LRV or URV, thus setting the range (see Figure 1.6e). The latter method is often used for pressure transmitters that are installed with impulse lines that add hydrostatic pressure. Pressing the button elevates or suppresses the zero, ensuring that the output is 4 mA when appropriate. If the transmitter has a noninteractive zero and span, the URV will be pushed by the equivalent amount, leaving the span unaffected. For example, if the range of a pressure transmitter in a level application starts off as 0 to 5.48 kPa, and applied rerange is done with 1.86 kPa input, the new range becomes 1.86 to 7.34 kPa. However, when a rerange is applied for the URV, this does not affect the zero; i.e., the span is changed instead.

The damping is a first-order lag filter time constant.

The transfer function is used to select linear or square root extraction for differential-pressure flowmeters, and possibly for other options such as a freely configurable lookup table or square root of third or fifth power for open-channel flow measurements. Square root extraction is often done in the central control system, but it is in fact better to do it in the transmitter, as this results in less A/D and D/A conversion error.

Fail-safe mode can be set as upscale or downscale as per the NAMUR NE-43 standard. *Downscale* means that the output current will be set to 3.6 mA in case the internal diagnostics detect a fault. *Upscale* means the output will be set to 21 mA. Ideally, the receiving controller should have an input module that can interpret the failure signal and use this to shut down the control loop.

It is also possible to review the write protection status of the device—if the device has been write protected using a jumper or other solution.

When performing range setting or calibration, the user needs to know the sensor limits and is therefore usually prompted with this information, which typically can be reviewed at any time (see Figure 1.6f). HART device information includes lower range limit (LRL), upper range limit (URL), and the minimum span. The minimum span is the smallest permitted absolute difference between the URL and LRL for the sensor.

Many configuration options are device specific in HART devices. For example, for a temperature transmitter, the sensor type and wiring has to be configured (see Figure 1.6g). For a valve positioner, the actuator type has to be configured.

In most FOUNDATION system installations, the device configuration is created off-line for all devices in advance and downloaded after installation. Moreover, the device configuration is typically accomplished with the network and control

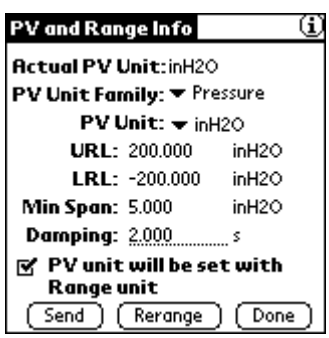

FIG. 1.6f
HART transmitter sensor limits.

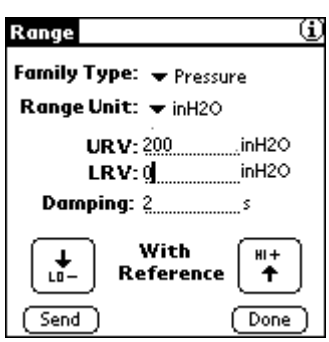

FIG. 1.6e
HART transmitter range setting.

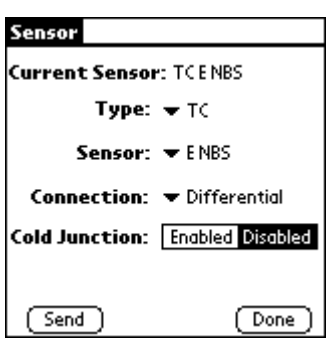

FIG. 1.6g
Sensor and wiring selection is device specific.

© 2003 by Béla Lipták

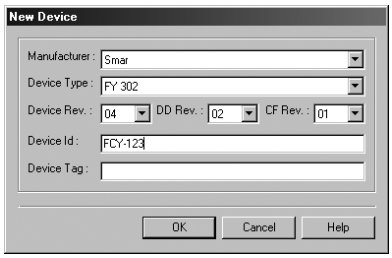

FIG. 1.6h
Pay attention to revisions when creating device configurations.

strategy configuration, all in the same tool. Thus, when configuring devices in a FOUNDATION system, the first step is to create the devices on the networks and give the devices a physical device tag (PD_TAG). Fieldbus devices are developing very rapidly. New versions are constantly being released, and many users already have several versions around the plant and in the store, this on top of a variety of brands of the same kind of device. When inserting new devices, it is important to specify the revisions to be used (see Figure 1.6h). Usually, the latest revision is the default. There is a risk that you will accidentally download a device configuration to the wrong model or wrong version device. A good tool prevents this and thus avoids the many headaches that could result.

Fieldbus devices do not require any range, because all values are communicated as floating-point values in engineering units. Ranges are typically used only in PID function blocks, or possibly in AI function blocks, to cater for conversions in inferred measurements, such as converting differential pressure to flow within specified ranges. That is, scaling is done as part of the control strategy configuration, not as part of the device configuration.

Every fieldbus device, H1 as well as HSE, needs to have one resource block. Really, the only parameter that must be configured is the mode. The MODE_BLK parameter *target* shall be set to automatic.

A fieldbus transducer block is required, in conjunction with every sensor and actuator, to act as an interface between the device and the control strategy. By parameterizing the transducer blocks, the device can be set up for the proper sensor or actuator type, such as HART devices. Similarly the transducer block also contains information about sensor limits. Indeed, there is a transducer scale range indication in the transducer block, but it is essentially a reflection of a setting done in the associated I/O function block. The MODE_BLK parameter target shall be set to automatic.

IDENTIFICATION

Information for identifying the device is very helpful during commissioning and maintenance. During the commissioning stage, it is useful for further assurance that connection has been made to the correct device. During maintenance, it is helpful for retrieving serial numbers, special instructions, important dates, and model numbers. The user can configure some of these parameters to be pertinent to the application. These parameters do not affect the operation of the device.

In addition to the sensor information such as range limits, HART device data such as sensor serial number, final assembly number, message, device tag, descriptor, date, manufacturer, device type, software and hardware revisions, and circuit board serial number are provided. For HART devices, the tag can use up to eight characters. The descriptor and message are 16 and 32 characters in length and can be configured as annotations describing the application and remind technicians of special precautions when servicing a device (see Figure 1.6i).

The date has no specific purpose but may be used to store when calibration or maintenance was last performed or is scheduled. Manufacturer, model, and version information can also be accessed (see Figure 1.6j).

HART devices such as pressure transmitters usually provide additional information about the materials of construction for the parts wetted by the process, e.g., the sensor isolating diaphragm, O-ring, flange and remote seal parts, and so on.

The resource block found in any FOUNDATION fieldbus device contains, among other things, identification information for the device. The tag descriptor parameter may be used to describe the application of the device. Manufacturer, model, and version information can also be accessed (see Figure 1.6k).



FIG. 1.6i
Application information from a HART device.



FIG. 1.6j
Detail attributes of a HART device.

© 2003 by Béla Lipták

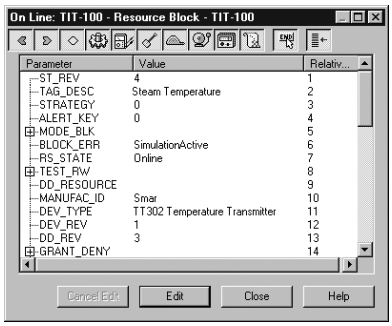

FIG. 1.6k
Fieldbus device identification from resource block.



FIG. 1.6m
Zero calibration of HART transmitter.

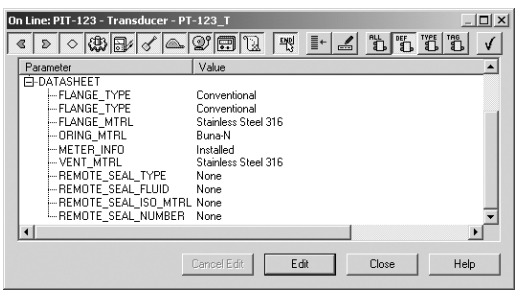

FIG. 1.6l
Pressure transmitter materials of construction.

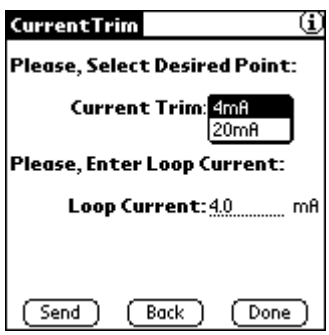

FIG. 1.6n
Loop current calibration.

Fieldbus devices such as pressure transmitters usually provide additional information about the materials of construction for the parts wetted by the process, e.g., the sensor isolating diaphragm, O-ring, flange and remote seal parts, and so on (see Figure 1.6l).

If any changes are ever made to the device parts, it is important to update this information.

CALIBRATION

When the sensor reading differs from the actual applied input, the sensor has to be calibrated. The correct reading is entered from the maintenance tool, and the device then performs the necessary adjustment. A special case of sensor calibration is zeroing, which by definition is done with a zero value applied. This is accomplished, for example, by venting in the case of a pressure transmitter; hence, no value has to be entered (see Figure 1.6.m).

Nonzero calibration is usually done with a precision source applied. Calibration is usually done in two points, known as the low and high calibration points, respectively. For most transmitters, calibration of these two points is noninteractive. There is a limit to how close the two calibration points can be, and the distance is referred to as the *minimum span.* Output converters also need to be calibrated. This is usually done by first forcing an output at one end of the scale and then comparing the actual output against a standard. The actual reading is entered into the device that makes the necessary correction. Control valve positioners usually calibrate their position-sensing sensor themselves by automatically stroking the valve over its entire travel.

Since HART devices rely on 4 to 20 mA, this current loop can also be calibrated. However, it is rarely done because, being totally electronic, this part of the device rarely experiences any drift at all. For a HART transmitter, this means that a fixed output current is generated. The technician checks the current against a standard and keys it into a device that makes the necessary correction (see Figure 1.6n). For HART output devices, a signal is injected, and the device is informed of the true current.

Sensor or actuation calibration for FOUNDATION fieldbus devices is done from the associated transducer block. The standard transducer block also includes several parameters for storing information about the last calibration. This includes two parameters for keeping the values of the two calibration points. This is useful when determining if a device has been calibrated at points that are suitable for the operating range. Additional information that can be stored includes calibration date, location, the method used, and who performed the calibration. It is good practice to update this information at each calibration and to display it along with useful sensor limit information (Figure 1.6o).

© 2003 by Béla Lipták

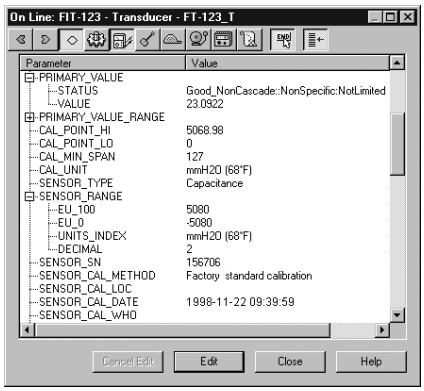

FIG. 1.6o
Calibration-related information.

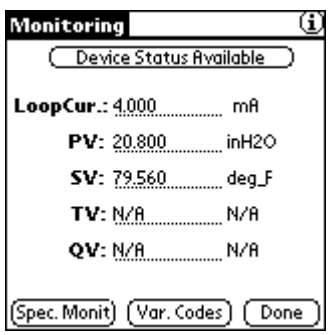

FIG. 1.6p
Monitoring of dynamic transmitter variables from a HART tool.

MONITORING

Configuration tools for HART and FOUNDATION fieldbus systems are generally designed in different ways, not only in terms of the way they look, but also the way they work. In HART tools, menus are usually arranged according to the function performed, whereas device configuration in fieldbus tools is arranged according to the resource and transducer blocks. Thus, in a HART device, there generally is a screen on which the transmitter variables can be monitored on line (see Figure 1.6p).

SIMULATION

At the time of commissioning, it is common to check that all indicators, recorders, and computer screens show the correct values, that alarm trips are working properly, and so on. This is particularly important for HART devices, because there is a chance that the range set in the device does not match that set in the central controller, and any difference would result in operational problems. To verify that all ranges are consistent, it is helpful to use the simulation function found in HART and fieldbus devices.

When performing simulation in a HART transmitter, the output current is manipulated independently of the applied

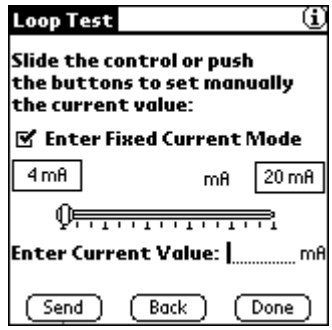

FIG. 1.6q
Using loop test to simulate process variable from a handheld.

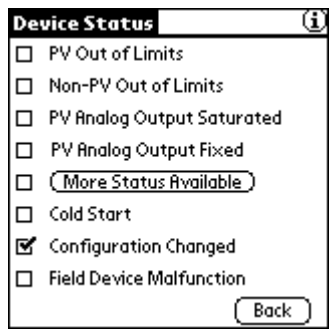

FIG. 1.6r
Basic HART diagnostics.

input (see Figure 1.6q). Generally, the handheld allows the current to be set slightly above and below the 4- to 20-mA range to simulate fault conditions.

Simulation is primarily used to test the control strategy. Therefore, simulation for FOUNDATION fieldbus devices is done from the input and output function blocks.

DIAGNOSTICS

Many device diagnostics can be performed from a configuration tool, but only if communication is established. If there is no functional communication, troubleshooting has to rely on traditional means. When it comes to diagnostics, one of the major differences in the application of HART and FOUNDATION fieldbus becomes most evident. While fieldbus devices are constantly communicating, making it possible to monitor device conditions continuously and instantly detect faults, communication with HART devices is typically carried out to confirm a problem only after the failure has already been detected. Although applications with continuous HART communications do exist, they are rare. To fully benefit from intelligence in field devices, the engineering tool should continuously communicate with the instruments.

Generic diagnostic information is communicated in every exchanged HART message, giving the device the opportunity to inform the user of any failure. Such error message includes general malfunction, exceeded limits, and a message that more detailed status report is available (see Figure 1.6r).

© 2003 by Béla Lipták

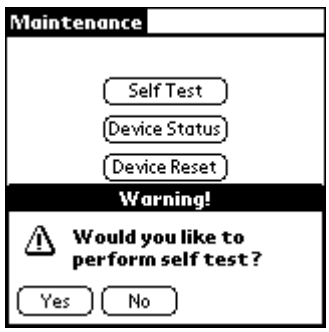

FIG. 1.6s
Advanced diagnostic self-test.

For some devices, a more thorough diagnostic self-test routine can be invoked (see Figure 1.6s).

Every FOUNDATION block, including function blocks, contains a block error parameter with some basic condition for the block itself, including configuration errors, I/O or memory failure, and others. In addition, the block mode parameter is useful for spotting problems, which often results in the actual mode being different from the target mode. Yet another good source of diagnostic information is the status associated with the function block inputs and outputs, and also with some of the parameters contained in transducer blocks and function blocks (see Figure 1.6t).

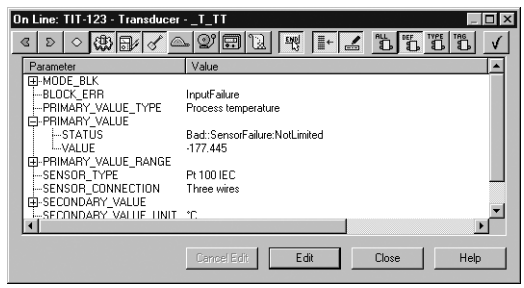

FIG. 1.6t
Abnormal status and actual mode are useful for tracing problems.

Diagnostic information for sensors and actuators is kept in their respective transducer blocks. The primary source for this information is the transducer error parameter that displays a single error at the time. Transducer blocks are always customized and typically contain extensive manufacturer-specific parameters related to diagnostics.

Reference

1. Berge, J., *Fieldbuses for Process Control Engineering, Operation and Maintenance*, ISA, Research Triangle Park, NC, 2002.

© 2003 by Béla Lipták

1.7 Instrument Installation

I. H. GIBSON (2003)

COST

- On the order of 40 to 50% of the capital cost of the equipment—extremely variable.
- A full set of PIP Process Control Practices documents cost U.S. $6500 in 2002.

For process measurements to achieve the targets of safety, accuracy, reliability, and economy, more than measuring equipment is involved. The entire system—from the process fluid characteristics, the ambient conditions, legal and regulatory requirements, and operations/maintenance requirements—must be coordinated to ensure that the equipment can be installed, calibrated, operated, recalibrated, maintained, and, if necessary, rebuilt or replaced while meeting the above primary criteria.

This section attempts to provide guidance to persons who are unfamiliar with current industrial practice; it does not attempt to cover all industries and all measurements. Specifically, it cannot cover the multitude of legal and regulatory requirements mandated by bodies such as the Occupational Safety and Health Administration (OSHA).

INSTALLATION DOCUMENTATION

The primary installation document is commonly called the *instrument index* (see Figure 1.7a). This tabulates all the tagged physical devices and commonly also includes tagged software devices. Each of the physical devices is then referenced to the associated installation drawings, such as the physical location plans, installation details (mechanical support, piping and wiring), cable ladder and conduit routing diagrams, and the connection diagrams. The instrument index is usually one of many documents from a large database, which also keeps track of calculations, specifications, and procurement documents and may also interface with a three-dimensional CAD model of the plant.

In a plant being designed with three-dimensional modeling, many of the dimensional drawings that otherwise would have been made previously are generated on demand by selection from the model. This enhances the quality of the design by flagging and eliminating clashes between equipment, piping and electrical/instrumentation space requirements and permits virtual walk-through reviews for operations and maintenance personnel.

Physical vs. Schematic Documents

The physical or scalar documents are the location plans (often sectional plans), cable/conduit routing plans, and the room layout drawings. These are based on the mechanical or piping layouts, commonly with the instrument information available as an overlay. The instrument tapping locations will be defined on the vessels and piping, and the final location for the various instruments becomes a matter for negotiation between the various groups to balance the requirements for operability with accessibility for maintenance. Traditionally, the instrument installation details have been essentially schematic, being used largely for material take-off. But with the growing use of three-dimensional CAD techniques, there is a tendency to produce approximately scale models for the common details to ensure that access requirements are addressed. Connection diagrams (electronic, electrical, pneumatic, hydraulic, and process) are purely schematic. These are now largely automated, with a minimal amount of input data being fed to a database loaded with connection rules for the various types of equipment.

SAFETY IN DESIGN

The instrument connections to the process are commonly the least mechanically secure components in the system. Consider the relative strength of a 1/2NS (DN15) Sch. 160 pipe as used by the piping designer to the usual 0.5-inch (12.7-mm) OD seamless 316L tube with 0.049-inch (1.24-mm) wall used for equivalent duty by the instrument designer. Yet this material has in fact an adequate strength for most applications within the range of Class 600 piping, provided that it is adequately protected and supported. Supported not only when the equipment is in service, but when any components are removed for maintenance. Many installations can be found with long runs of tube run to an absent transmitter, with the tube supported at best by a rope or wire. Not only are long tubing runs a significant source of measurement error, the lack of support is inherently hazardous. Modern installation details will anchor the tubing runs by supporting the instrument manifold, which remains in place if the transmitter is removed, and minimize any hazard from the temptation to use tubing runs as a hand (or foot) support.

The first valve off the process (known as the “root valve”) has traditionally been the province of the piping designer. More recently, the selection of this valve has become a joint

© 2003 by Béla Lipták

Tag Number	Instrument Type	I/O Type	Status	Service	Location	Equipment	Manufacturer	Model	Price
101-FE -100	D/P TYPE FLOW ELEMENT		N	Feed from V-8	Field		FISHER-PORTER		$110
101-FT -100	D/P TYPE FLOW TRANSMITTER	AI	N	Feed from V-8	Field		ROSEMOUNT	1151DP4E22S2B1M2	$1095
101-FY -100	I/P TRANSDUCER	AO	N	Feed from V-8	Field		FISHER	461	$580
101-FV -100	CONTROL VALVE		N	Feed from V-8	Field		FISHER	ES	$3250
101-PI -100	PRESSURE GAUGE		N	Heat exchanger inlet	Field		ASHCROFT	MGS-136	$65
101-PI -102	PRESSURE GAUGE		N	Heat exchanger outlet	Field		ASHCROFT	MGS-136	$65
101-HY -101	I/P TRANSDUCER	AO	N	C-101 Bypass	Field	C-101	FISHER	461	$580
101-HV -101	CONTROL VALVE		N	C-101 Bypass	Field		FISHER	ET	$2100
101-FE -102	D/P TYPE FLOW ELEMENT		N	Feed from C-1	Field				$120
101-FT -102	D/P TYPE FLOW TRANSMITTER	AI	N	Feed from C-1	Field		ROSEMOUNT	1151DP4E22S2B1M2	$1095
101-PI -101	PRESSURE GAUGE		N	F-102 Stripper inlet	Field		ASHCROFT	MGS-136	$65
101-TW -203	THERMOWELL		N	F-102 Overhead	Field				
101-TI -203	BI-METAL THERMOMETER		N	F-102 Overhead	Field		ASHCROFT	EVERY-ANGLE-13/02	$45
101-PSH -208	HIGH-PRESSURE SWITCH	DI	N	F-102 Overhead	Field		ASCO	8351B23	$720
101-PT -201	PRESSURE TRANSMITTER	AI	N	F-102 TOP	Field	F-102	ROSEMOUNT	3051S1256	$1095
101-LT -201	DISPLACER TYPE LEVEL	AI	N	F-102 Middle section	Field	F-102	MASONEILAN	9600	$1095
101-LY -201	I/P TRANSDUCER	AO	N	F-102 Middle section	Field		FISHER	461	$580
101-LV -201	CONTROL VALVE		N	F-102 Middle section	Field		FISHER	ED	$1340
101-TW -202	THERMOWELL		N	F-102 Top	Field	F-102			$45
101-TE -202	THERMOCOUPLE		N	F-102 Top	Field	F-102	ASHFORD	TE-11-34/13	$22
101-TT -202	TEMPERATURE TRANSMITTER	AI	N	F-102 Top	Field	F-102	ROSEMOUNT	3051S1256	$650
101-TY -202	I/P TRANSDUCER	AO	N	F-102 Top	Field		FISHER	461	$580
101-TV -202	CONTROL VALVE		N	F-102 Top	Field		FISHER	V500	$2300
101-TW -201	THERMOWELL		N	F-102 Top	Field	F-102			$51
101-TI -201	BI-METAL THERMOMETER		N	F-102 Top	Field	F-102	ASHCROFT	EVERY-ANGLE-13/02	$45
101-FT -201	D/P TYPE FLOW TRANSMITTER	AI	N	Stripping Steam to F-102	Field		ROSEMOUNT	1151DP4E22S2B1M2	$1095

Test 1			Test 2		DEFAULT STYLE Report	Test 3	Test 4
						Filter: None	FLUOR
						Sort: None	
						Plant name: New Refinery	
						Area name: Crude Area	
						Unit name: Crude unit 1	Sheet 1 of 3
							Horizontal Section 1 of 1
						Domain: FDMELB	Last Revision:
No.	By	Date	Chk	App	Revision	Client	Dwg. Name:

FIG. 1.7a

Typical instrument index report (extracted from Intools database).

© 2003 by Béla Lipták

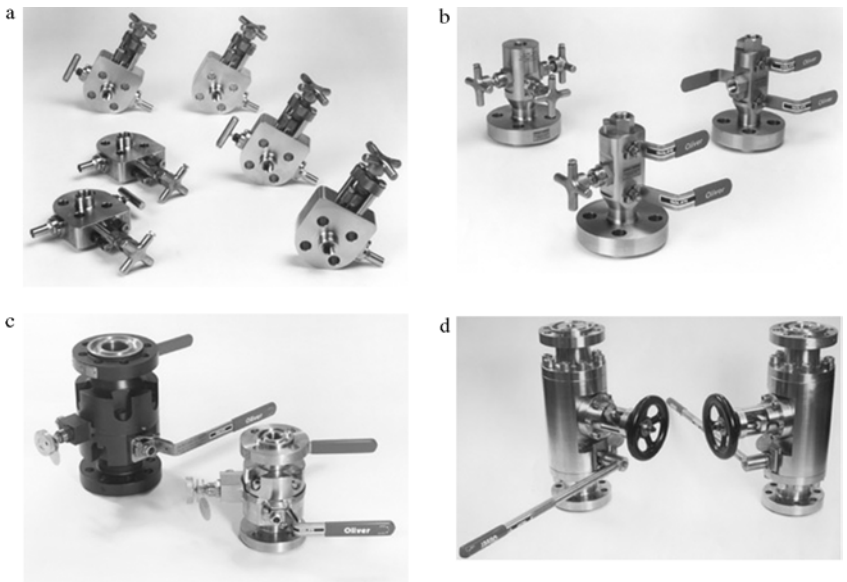

FIG. 1.7b
Current generation instrument isolation and process DBB valves. (Courtesy of Oliver Valve Ltd.)

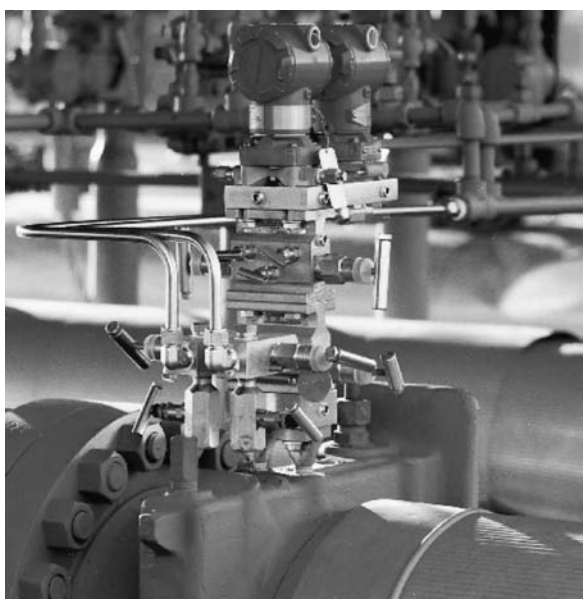

FIG. 1.7c
Fiscal orifice metering installation using direct-mounting technique. (Courtesy of Tyco/Anderson Greenwood.)

responsibility, with 'process-rated' instrument valves being available which give 'double-block and bleed' (DBB) capability in the envelope of a 1NS (DN40) blind flange (Figures 1.7b and c). The ability to close couple a transmitter to the line in this manner can reduce potential leak points and weight significantly for offshore installations at similar cost to older designs.

The point of DBB deserves comment. For a technician to work on a transmitter or gauge, the process must be securely isolated. If the process fluid is flammable or at high or low temperature any chance of a leak should be obviated. DBB provides this by providing two isolation valves between the technician and the process, with the space between vented to a safe place. The definition of where DBB is required is normally part of the operating company's standards, but Class 600 (and higher) piping should always be covered by it. Toxic materials call for more stringent techniques, with tubed vents and designed-in decontamination methods.

Pipe and Tube Material

Current minimum design practice is to use a stainless steel meeting both 316 and 316L for tubing and fittings for both pneumatic and process connections. The pneumatic tubing may be 0.25 inch (6.35 mm) or 0.375 inch (9.53 mm) OD, while process connections are usually 0.375 or 0.5 inch (9.53 or 12.7 mm). The wall thickness of pneumatic tube is commonly 0.035 inch, while process tubing is a minimum of 0.048 inch, with heavier (0.064 inch) used for pressures above about 1000 psi (6800 kPa). This is the heaviest wall tube that can conveniently be bent and fitted off without using hydraulic benders and setters.

Plants using metric standards may use either metric or inch series tube but mixing the two in the same plant should be avoided, as accidents can be caused by mismatching. 12 mm OD tube will fit in a half-inch compression fitting but will rapidly disassemble itself under test. Always use seamless drawn tube for compression fitting installations, as electric-resistance-welded (ERW) tube has a small flat on the outside that makes for difficulty in achieving a leaktight connection.

316 stainless is a good general-purpose material, but it is prone to chloride attack at temperatures above 140°F (60°C).

© 2003 by Béla Lipták

This can be significant both internally and externally—tropical marine installations can easily achieve such temperature in sunlight. Monel™ (cupronickel) and duplex stainless are both widely used in such locations; duplex offers higher tensile strength and pressure rating. Ensure that the tube wall thickness chosen meets the most stringent pressure and temperature combination likely to be found.

If possible, avoid using or having tube with identical diameter but different wall thicknesses and materials in the same plant, even at the expense of using more costly material, because the probability of getting under-rated material installed during maintenance or modification is severely increased. If it is necessary, ensure that the installations with higher-grade material are permanently flagged on drawings and in the field (Table 1.7d).

Electrical Installations in Potentially Explosive Locations

While the practices for piping/tubing installations are similar around the world, there is a split between North American and European practices (commonly described as NEC v. IEC practices) in wiring methods. Fortunately this divide is now closing, as IEC design practices are becoming accepted in parallel with NEC in North America, though there are still a few standards where features mandated by IEC are prohibited by NEC. The best advice is to determine the statutory and regulatory rules for the site, and try to avoid any violation of them. 'Try' may be the operative word in many cases, where considerable negotiating might be required with the regulatory inspectors if 'state-of-the-art' equipment is required, and the approval certification is not quite ready for your site.

Physical Support

The traditional support for field instruments is 2NS (DN50) pipe. Most non-inline field instruments are provided with mounting brackets designed to attach to vertical or horizontal pipe, and also to flat plate. Traditionally, these supports have been fabricated from carbon steel pipe and plate and been hot-dip galvanized after fabrication. Some design details endeavour to weld zinc plated material, but this practice is difficult in achieving good welds and the 'zinc fume' from the welding is toxic. Therefore, one should generally avoid the use of zinc coatings. Also, there have been a number of

TABLE 1.7d
Instrument Tubing Properties

						–198 °C < T < 37 °C –325 °F < T < 100 °F		*–254 °C < T < 37 °C –425 °F < T < 100 °F*		*–29 °C < T < 37 °C –20 °F < T < 100 °F*	
Outside Diameter		*Wall Thickness*		*Bore*		*Max. WP 316/316L*		*Max. WP 304*		*Max. WP Alloy400*	
inch	*mm*	*inch*	*mm*	*inch*	*mm*	*psi*	*kPa*	*psi*	*kPa*	*psi*	*kPa*
0.125	3.18	0.036	0.91	0.053	1.35	11416	78729	10651	73454	10651	73454
0.1875	4.76	0.036	0.91	0.1155	2.93	7039	48545	6567	45292	6567	45292
0.250	6.35	0.036	0.91	0.178	4.52	5088	35091	4747	32740	4747	32740
		0.048	1.22	0.154	3.91	7039	48545	6567	45292	6567	45292
		0.064	1.63	0.122	3.10	9880	68137	9218	63572	9218	63572
0.375	9.53	0.036	0.91	0.303	7.70	3274	22577	3054	21065	3054	21065
		0.048	1.22	0.279	7.09	4469	30821	4170	28756	4170	28756
		0.064	1.63	0.247	6.27	6154	42443	5742	39599	5742	39599
0.500	12.70	0.036	0.91	0.428	10.87	2413	16642	2251	15527	2251	15527
		0.048	1.22	0.404	10.26	3274	22577	3054	21065	3054	21065
		0.064	1.63	0.372	9.45	4469	30821	4170	28756	4170	28756

Notes:
Max. working pressure based on the ASME B31.3 formula P = 2tSE/(D – 2tY), allowing a factor of 4 safety factor
t taken as 0.85 of the nominal wall thickness, according to ASTM A-269 manufacturing tolerance.
316/316L is a dual-graded cold-drawn seamless tube to ASTM A269/A213, max hardness Rb80.

Ultimate tensile strength			75000	70000	70000	psi
Temperature Correction at other temperatures at nominal temperature (above)			1	1	1	
	200°F	93°C	1	1	0.88	
	400°F	204°C	0.96	0.93	0.79	
	600°F	316°C	0.85	0.82	0.79	
	800°F	427°C	0.79	0.76	0.76	
	1000°F	538°C	0.76	0.76	—	

© 2003 by Béla Lipták

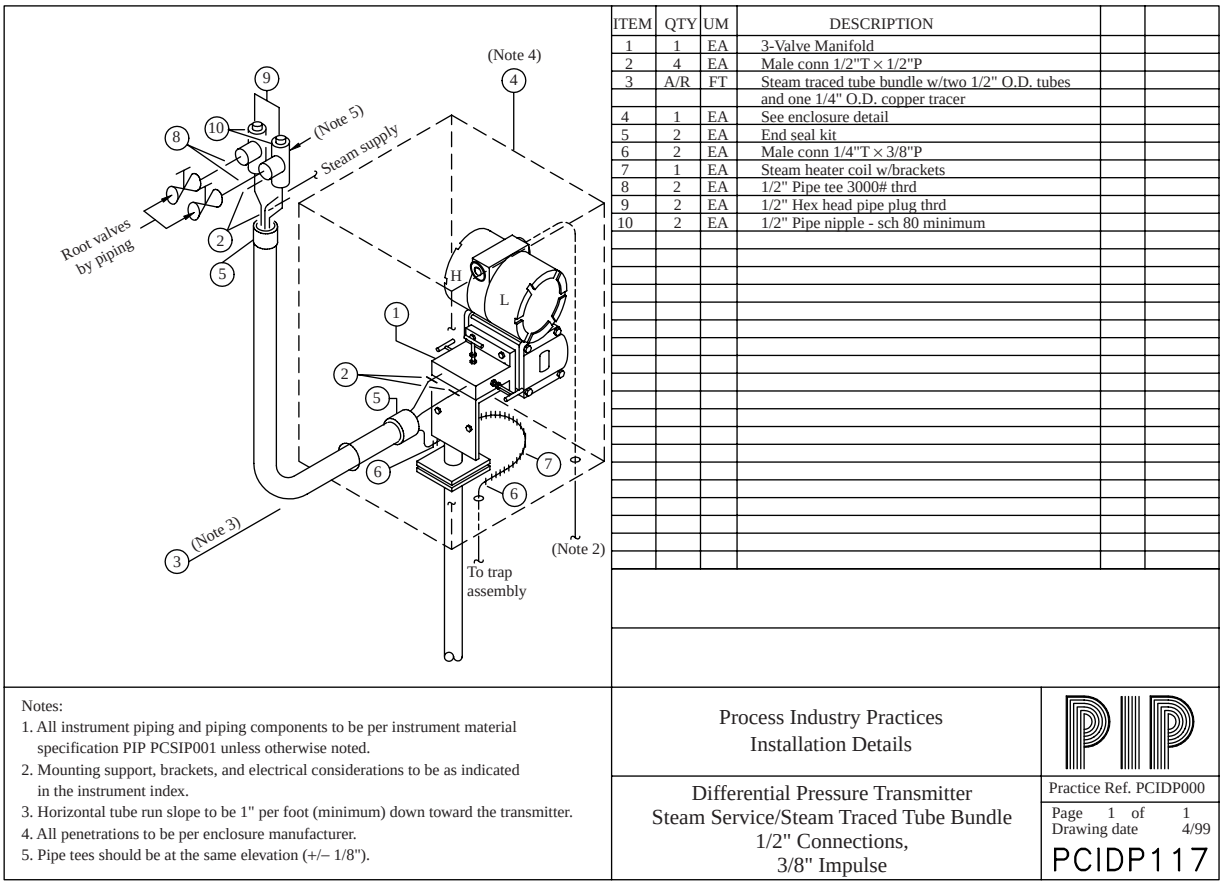

ITEM	QTY	UM	DESCRIPTION		
1	1	EA	3-Valve Manifold		
2	4	EA	Male conn 1/2"T × 1/2"P		
3	A/R	FT	Steam traced tube bundle w/two 1/2" O.D. tubes and one 1/4" O.D. copper tracer		
4	1	EA	See enclosure detail		
5	2	EA	End seal kit		
6	2	EA	Male conn 1/4"T × 3/8"P		
7	1	EA	Steam heater coil w/brackets		
8	2	EA	1/2" Pipe tee 3000# thrd		
9	2	EA	1/2" Hex head pipe plug thrd		
10	2	EA	1/2" Pipe nipple - sch 80 minimum		

Notes:
1. All instrument piping and piping components to be per instrument material specification PIP PCSIP001 unless otherwise noted.
2. Mounting support, brackets, and electrical considerations to be as indicated in the instrument index.
3. Horizontal tube run slope to be 1" per foot (minimum) down toward the transmitter.
4. All penetrations to be per enclosure manufacturer.
5. Pipe tees should be at the same elevation (+/– 1/8").

Process Industry Practices
Installation Details

Differential Pressure Transmitter
Steam Service/Steam Traced Tube Bundle
1/2" Connections,
3/8" Impulse

PIP

Practice Ref. PCIDP000

Page 1 of 1
Drawing date 4/99

PCIDP117

FIG. 1.7e
Typical PIP transmitter installation detail.

significant failures of stainless and high alloy piping when minor fires melted the zinc from galvanized walkways, etc. If molten zinc comes in contact with an austenitic alloy, it penetrates its grain structure within seconds and the strength of the alloy vanishes. To protect from this effect and to avoid corrosion, a number of sites are now using stainless steel "strut" supports.

PROCESS INDUSTRIES PRACTICES

A consortium of the major petroleum, chemical, and related manufacturers, together with major engineer-constructors have joined to form the Process Industry Practices (PIP) division of the Construction Industry Institute, an organization associated with The University of Texas at Austin. The PIP offices are located to 3925 West Braker Lane (R4500), Austin, TX 78759.

PIP (website *http://www.pip.org*) has generated a wide-ranging series of standard practices in a variety of engineering fields. Among the 20 Practices for Process Control are some 9 sets covering instrument installation. These are available to members of the consortium and subscribers for their direct use, and can be purchased by other organizations Figures 1.7e, f, and g).

In an effort to minimize the cost of process industry facilities, these Practices have been prepared from the technical requirements in the existing standards of major industrial users, contractors, or standards organisations. By harmonising these technical requirements into a single set of Practices, administrative, application, and engineering costs to both the purchaser and the manufacturer should be reduced. While these Practices are expected to incorporate the majority of requirements of most users, individual applications may involve requirements that will be appended to and take precedence over individual Practices. Determinations concerning fitness for purpose and particular matters or application of the Practice to particular project or engineering situations should not be made solely on information contained in these materials.

The tabulation of PIP installation documents (Table 1.7h) is not exhaustive, and they are frequently edited and extended.

Bibliography

Process Industry Practices (see Table 1.7h) issued by Process Industry Practices, 3925 West Braker Lane (R4500), Austin, TX 78759, USA.

© 2003 by Béla Lipták

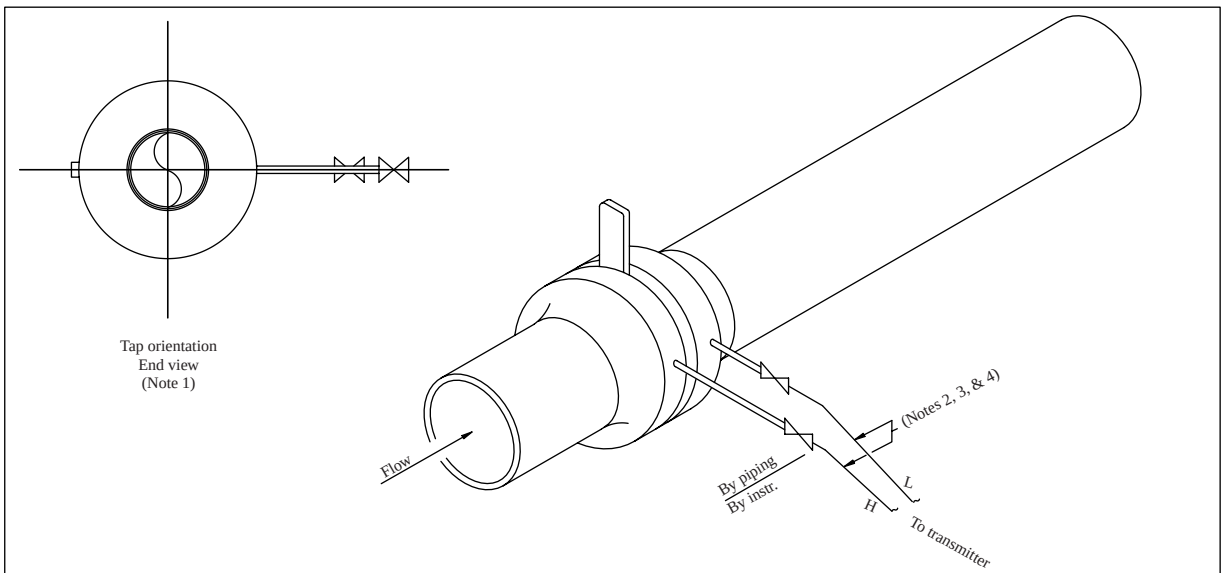

Notes:
1. Tap orientation is shown for orifice flange taps. Orientation may be used with other taps (e.g., pipe taps, radius taps) and venturimeters, flow nozzles, etc.
2. Slope down (minimum 1 inch per foot) from process taps to equalizing manifold.
3. Refer to installation details in PIP PCIDPOOO for materials.
4. If required, locate optional tee pressure transmitter connection in high pressure side of flow measurement in close proximity to equalizing manifold.
5. Refer to piping connection details in PIP PNF0200.

Process Industry Practices
Installation Details

Head meter with remote transmitter
below for liquid and steam service
horizontal run - horizontal side taps

PIP

Practice Ref. PCIFL000
Page 1 of 1
Drawing date 5/99
PCIFL012

FIG. 1.7f
Typical PIP element installation detail.

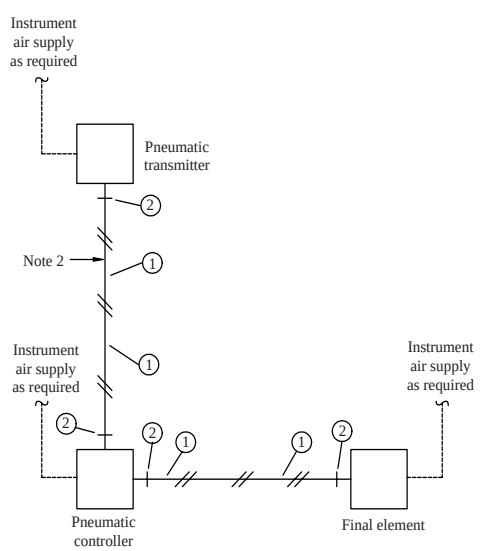

ITEM	QTY	UM	DESCRIPTION		
1		FT	1/4" O.D. Tubing. See note 1		
2	4	EA	1/4"T × 1/4"P Male tube connector. See note 1		

Notes:
1. All instrument piping and tubing components to be as specified in the instrument index per material specifications from PIP PCSIP001, instrument piping and tubing specifications, unless otherwise noted.
2. Routing, installation and support to be per PIP PCCIP001, instrument piping and tubing systems criteria.

Process Industry Practices
Installation Detail

Instrument Signal
Pneumatic Loop

PIP

Practice Ref. PCIIA000
Page 1 of 1
Drawing date 4/99
PCIIA102

FIG. 1.7g
Typical PIP pneumatic installation detail.

© 2003 by Béla Lipták

TABLE 1.7h
Listing of Process Industry Practices for Instrument Installation

Differential Pressure

PCIDP000 Differential Pressure Installation Details Date: 07-01 (revised)
Native DGN PCIDP000_dgn.exe 5265 KB Native DWG PCIDP000_dwg.exe 9651 KB Native Text PCIDP000.doc 89 KB
PDF PCIDP000.pdf 4415 KB File

Electrical

PCFEL000 Instrumentation Electrical Fabrication Details Date: 12-99
Native DGN PCFEL000.dgn 97 KB File Native DWG PCFEL000.dwg 96 KB File Native Text PCFEL000.doc 50 KB File
PDF PCFEL000.pdf 122 KB File

PCIEL000 Instrumentation Electrical Installation Details Date: 02-00
Native DGN PCIEL000_DNG.ZIP 2293 KB Native DWG PCIEL000_DWG.ZIP 3485 KB Native Text PCIEL000.doc 119 KB
PDF PCIEL000.pdf 3040 KB

Flow

PCFFL000 Flow Measurement Fabrication Details Date: 01-01
Native DGN PCFFL000_DGN.EXE 1294 KB Native DWG PCFFL000_DWG.ZIP 1334 KB Native Text PCFFL000.doc 74 KB
PDF PCFFL000.pdf 238 KB

PCIFL000 Flow Measurement Installation Details Date: 04-01
Native DGN PCIFL000_DGN.exe 2573 KB Native DWG PCIFL000_DWG.exe 3532 KB Native Text PCIFL000.doc 76 KB
PDF PCIFL000.pdf 594 KB

General

PCCGN001 General Instrumentation Design Checklist Date: 07-01
Native PCCGN001.doc 893 KB
PDF PCCGN001.pdf 157 KB

PCCGN002 General Instrument Installation Criteria Date: 10-01
Native PCCGN002.doc 104 KB
PDF PCCGN002.pdf 44 KB

PCFGN000 Instrument Pipe Support Fabrication Details Date: 06-00
Native DGN PCFGN000_DGN.EXE 204 KB Native DWG PCFGN000_DWG.ZIP 248 KB Native Text PCFGN000.doc 93 KB
PDF PCFGN000.pdf 314 KB

PCIGN000 Instrument Pipe Support Installation Date: 06-00
Native DGN PCIGN000_DGN.ZIP 329 KB Native DWG PCIGN000_DWG.ZIP 475 KB Native Text PCIGN000.doc 68 KB
PDF PCIGN000.pdf 341 KB

PCIGN001 General Instrument Purge Details Date: 09-01
Native DGN PCIGN001_DGN.ZIP 860 KB Native DWG PCIGN001_DWG.ZIP 697 KB Native Text PCIGN001.doc 68 KB
PDF PCIGN001.pdf 234 KB

Instrument Air

PCIIA000 Instrument Air Installation Details Date: 07-01
Native DGN PCIIA000_DGN.ZIP 274 KB Native DWG PCIIA000_DWG.ZIP 1175 KB Native Text PCIIA000.doc 62 KB
PDF PCIIA000.pdf 482 KB

Instrument Piping

PCCIP001 Instrument Piping and Tubing Systems Criteria Date: 07-98
Native Text PCCIP001.doc 88 KB
PDF PCCIP001.pdf 30 KB

PCSIP001 Instrument Piping and Tubing Systems Specifications Date: 07-98
Native Text PCSIP001.doc 121 KB
PDF PCSIP001.pdf 103 KB

Process Analyzers

PCIPA001 Process Analyzer System Field Installation Date: 10-01
Native Text PCIPA001.doc 110 KB
PDF PCIPA001.pdf 39 KB

© 2003 by Béla Lipták

TABLE 1.7h Continued

Listing of Process Industry Practices for Instrument Installation

Pressure

PCIPR000 Pressure Installation Details Date: 04-99
Native DGN PCIPR000_dgn.exe 3912 KB Native DWG PCIPR000_dwg.exe 3137 KB Native Text PCIPR000.doc 154 KB PDF PCIPR000.pdf 8314 KB

Temperature

PCFTE000 Temperature Measurement Fabrication Details Date: 04-00
Native DGN PCFTE000_DGN.ZIP 242 KB Native DWG PCFTE000_DWG.ZIP 393 KB Native Text PCFTE000.doc 73 KB PDF PCFTE000.pdf 632 KB

© 2003 by Béla Lipták

1.8 Instrument Calibration

H. M. HASHEMIAN (2003)

INTRODUCTION

The performance of a process instrument such as a temperature or pressure sensor normally depends on its accuracy and response time. *Accuracy* is a qualitative term that describes how well the instrument may measure the process parameter (see Section 1.4 for an in-depth discussion), and *response time* specifies the speed by which the instrument can detect any significant change in the value of a process parameter. Accuracy and response time are largely independent and are therefore identified through separate procedures.

The accuracy of a process instrument is established through its calibration, and the response time is determined by exposing the instrument to a dynamic input and measuring its response time from the transient output. Response time is discussed in more detail in Section 1.9. Calibration is done by providing the instrument with a number of known and stable inputs to ensure that the output accurately represents the input.

Two terms are important in instrument calibration. These terms are *zero* and *span*, as illustrated in Figure 1.8a. In this figure, the calibration of a linear transmitter is approximated with a straight line, represented by the equation $y = mx + b$, where y is the output, x is the input, m is the slope of the line, and b is the intercept. The calibration of an instrument may change due to a change in zero, a change in span, or a change in both zero and span. A change in zero is also referred to as a *bias error*, *DC offset*, or *zero shift*. A zero shift results in a change in instrument reading (either positive or negative) at all points along its range (Figure 1.8b). A zero shift can result from several causes, such as a change in ambient temperature affecting the calibration. For example, if an instrument is calibrated at room temperature and used at a different temperature, its output may include a bias error (or zero shift) due to the temperature difference.

The change in span is also referred to as a *gain error* or span shift. A span shift means an increase or a decrease in the slope of the instrument output line for the same input (see Figure 1.8c). Typically, calibration errors involving span shift alone are less common than calibration errors due to both zero and span shifts. In Figure 1.8c, both cases are shown: span shift without zero shift and span shift with zero shift. In pressure transmitters, about 40% of the calibration changes are caused by zero shift, about 30% by span shift, and only about 20% by span shift alone.[1] As for the remaining 10%, the calibration changes are due to other effects, such as nonlinearity.

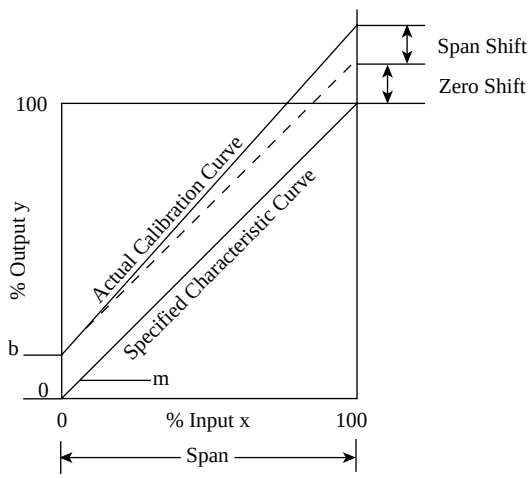

FIG. 1.8a
Illustration of zero and span. b = zero elevation; m = gain of a linear transmitter; span = the change in input (x) as it travels from 0–100%; range = the change in output (y) corresponding to 0–100% span; output @ input = 0 is called lower range value; output @ input = 100% is called upper range value.

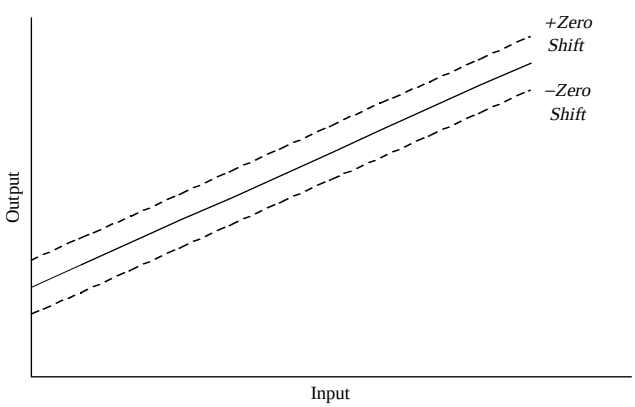

FIG. 1.8b
Illustration of a zero shift in an instrument calibration.

Calibration of Pressure Sensors

Calibration of pressure sensors (including both absolute and differential-pressure sensors) involves using a constant pressure source such as a deadweight tester (see Figure 1.8d). With a deadweight tester, constant pressure is produced for the sensor while the sensor output is monitored and adjusted

© 2003 by Béla Lipták

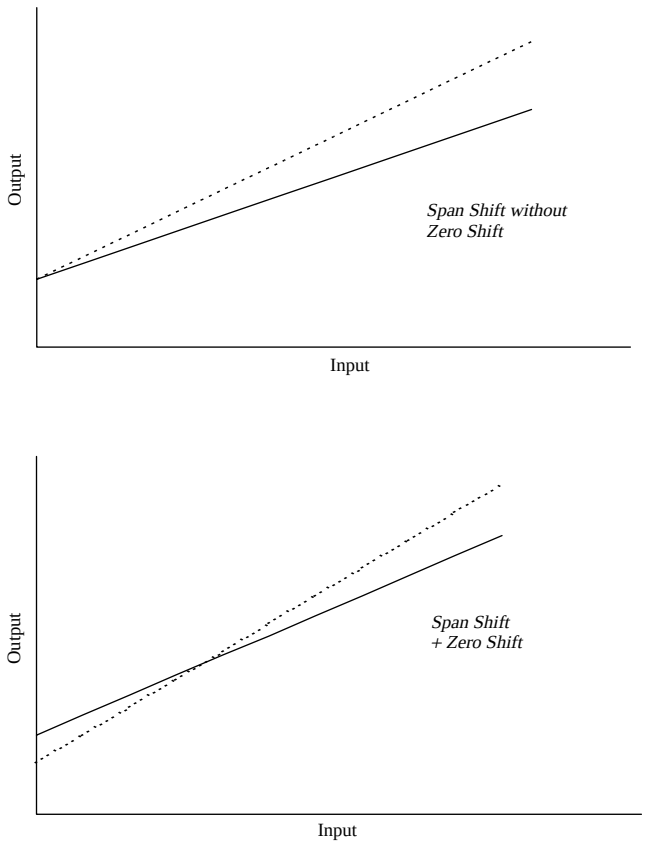

FIG. 1.8c
Illustration of span shifts.

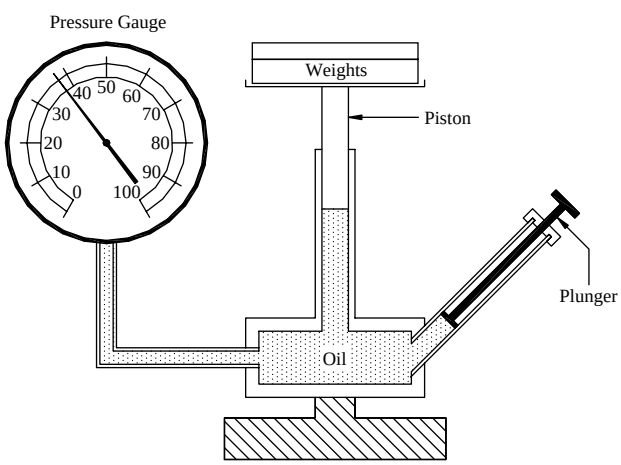

FIG. 1.8d
Schematic of a typical deadweight tester.

to make the electrical output proportional to the applied pressure. For example, a pressure sensor may be calibrated to produce an output in the range of 4 to 20 mA for pressure inputs covering the whole span of the sensor (0 to 100%). For most pressure sensors, with no pressure applied, the transmitter output is adjusted to produce a 4-mA signal. Next, a pressure that corresponds to 100% of the span is applied by the deadweight tester, and the sensor output is adjusted to 20 mA. These adjustments to the output are made by setting two potentiometers provided in the pressure sensor. These adjustment devices are referred to as the *zero* and *span* potentiometers. The next step in the calibration of a pressure transmitter is to apply known pressures between 0 and 100% of span to verify the linearity of the transmitter and to make any necessary adjustments to obtain accurate mA outputs for all inputs.

The zero and span adjustments of a pressure sensor interact, meaning that changing one will cause the other to change, and vice versa. Thus, in calibrating a pressure sensor, the zero and span are often both adjusted to produce the most accurate output that can be achieved for each input pressure. Because of the nonlinearities in some pressure sensors, the input/output relationships cannot be exactly matched, no matter how well the span and zero adjustments are tuned together. For that reason, in most pressure sensors, a linearity adjustment is also provided (in addition to the zero and span potentiometers) to help achieve the best agreement between the input pressure and the output current.

In lieu of a deadweight tester, one can also use a stable pressure source and a precision pressure gauge as the input. Precision pressure gauges are available in a variety of ranges from a number of manufacturers (see Section 5.11). Highly accurate digital pressure indicators can also be used for calibration. As will be seen later, automated pressure sensor calibration equipment is also available that uses digital technology to offer both accuracy and convenience.

As-Found and As-Left Data

The calibration of an instrument can change with time. Therefore, instruments are recalibrated periodically. The periodic calibration procedure typically involves two steps: (1) determine if calibration is needed, and (2) calibrate if needed. In the first step, known input signals (e.g., 0, 25, 50, 75, and 100% of span) are applied to the instrument, and its output is recorded on a data sheet. The data thus generated is referred to as the *as-found* calibration data (see Table 1.8e). If the as-found data show that the instrument's calibration is still acceptable, no calibration is needed. Otherwise, the instrument is

TABLE 1.8e
Example of an Instrument Calibration Data

Input Signal (% of Span)	*Desired Output (mA)*	*As-Found Data (mA)*	*As-Left Data (mA)*
0	4.00	3.93	3.99
25	8.00	8.03	8.01
50	12.00	11.92	12.04
75	16.00	16.09	15.96
100	20.00	20.12	19.97

© 2003 by Béla Lipták

calibrated by systematically applying a series of input signals and making zero and span adjustments as necessary to bring the sensor within acceptance limits or criteria. The input/output data after this calibration is referred to as the *as-left* data, and the difference between the as-found and as-left data is often termed the *calibration drift* or *calibration shift.*

The acceptance criterion for calibration is normally established by the user, based on the accuracy requirements for the instrument and/or on the manufacturer's specification. Typically, manufacturers state the inaccuracy (the error or uncertainty) of an instrument in terms of a percentage of span throughout the range of the instrument. For example, pressure sensor errors can be as low as about 0.05% of span in high-precision sensors or as high as about 1% of span in sensors for general applications.

The high-precision performance can only be obtained if the sensor is properly calibrated, because overall accuracy depends as much on the quality of the calibration process as it does on the ability of the sensor to provide a particular accuracy. Reliable calibration requires the availability of trained personnel, written procedures, and accurate calibration equipment. Obviously, the accuracy of the calibration equipment must be much better than the equipment being calibrated, and the calibration personnel must understand the calibration process and exercise care in performing the calibration task, reading the calibration data, and documenting the results. If an instrument is not properly calibrated, it will not produce accurate and reliable measurements, even if the quality of the instrument itself is high.

Hysteresis

Hysteresis is a phenomenon that causes an instrument's output to vary, depending on the direction of the applied input signals, i.e., whether it is increasing or decreasing (see Figures 1.3b and 1.8f). To account for hysteresis, instruments are sometimes calibrated using both increasing and decreasing input signals, and the results are averaged. For example, a pressure sensor may be calibrated using input signals in this sequence: 0, 25, 50, 75, 100, 75, 50, 25, and 0% of span.

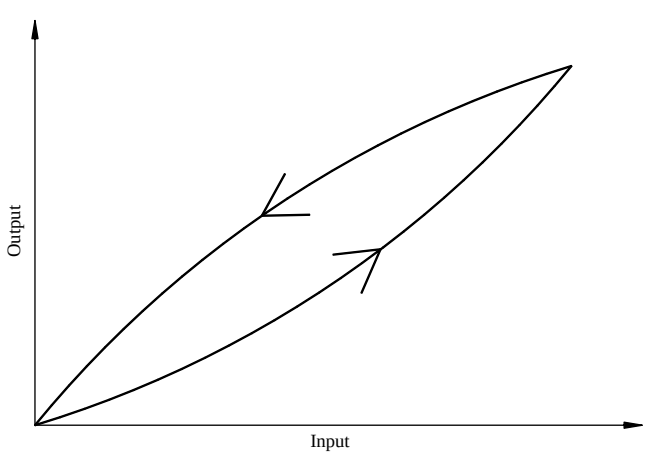

FIG. 1.8f
Illustration of hysteresis.

Normally, a manufacturer's specification of an instrument's accuracy is arrived at considering hysteresis, linearity, repeatability, and other factors that can affect the instrument's input/output relationship (see Section 1.3 for the definitions of these terms).

Calibration Traceability

To be valid and acceptable, all calibrations should be traceable to a national standard or to a known physical phenomenon. In the United States, equipment calibrations are expected to be traceable to the National Institute of Standards and Technology (NIST), in Gaithersburg, MD. Each country has its own standard calibration laboratory for a variety of parameters such as pressure, temperature, voltage, resistance, weight, time, and so on. The national standards laboratories are normally charged with calibration of primary standards. A primary standard is an instrument that is calibrated at the national standard laboratory like the NIST and used to calibrate other equipment. For example, the primary standard for calibration of resistance temperature detectors (RTDs) is a precision RTD that is referred to as a *standard platinum resistance thermometer* or *SPRT.* Each RTD calibration laboratory has one or more SPRTs that are sent to NIST periodically to be calibrated.

To be calibrated by a national standard laboratory such as NIST, a primary standard must be in good working condition and meet certain requirements. Otherwise, NIST may not calibrate it. National standards laboratories are charged with helping to maintain primary standards and therefore do not calibrate common-purpose equipment, nor do they repair equipment that is not in good working order.

To protect the primary standard equipment, a secondary standard (also called *transfer standard*) may be used. In this case, the primary standard is used to calibrate the secondary standard, which is then used for calibration of other instruments. The advantage of this approach is that it preserves the integrity as well as the accuracy of the primary standard by minimizing its handling and use. The disadvantage is that, every time an instrument is calibrated, the accuracy that can be claimed is below the accuracy of the standard that is used in its calibration. Therefore, in going from a primary standard to a secondary standard, a loss of accuracy results.

A common rule is that an instrument shall be calibrated using a standard that is at least four times more accurate than the instrument being calibrated. This requirement is sometimes difficult to meet, as instruments have become so accurate in recent years that one may not find a standard that can be four times more accurate.

Linearity and Damping Adjustments

As was mentioned before, in addition to zero and span, some instruments also have a linearity adjustment that is used to produce the most linear input/output relationship throughout the span. A damping adjustment is also available in

© 2003 by Béla Lipták

some instruments. This adjustment does not affect the calibration of an instrument, but it affects its response time. The purpose of the damping adjustment is to reduce the noise in the output signal of the instrument when the process is very noisy. This is accomplished by increasing the damping, which slows the dynamic response of the instrument so that it is not sensitive to high-frequency or noisy inputs.

Automated Calibration Equipment

Recent advancements in electronics and computer technologies have resulted in the development of a variety of automated test equipment and computer-aided calibrations. For example, Figure 1.8g illustrates the components of an automated pressure sensor calibration system. It consists of a programmable pressure source that is controlled by a computer and produces known pressure inputs that are applied to the sensor being calibrated. The output of the sensor is recorded by the same computer and produces the record of the *as-found* data. The sensor is calibrated using both increasing and decreasing input signals as shown in Figure 1.8h, and a hysteresis curve is also produced. Next, the software compares the as-found data against the acceptance criteria and automatically determines if the sensor needs to be recalibrated. If so, the system provides the necessary input signals to the sensor under calibration and holds the input value constant until zero and span adjustments are made manually. After the calibration, the software produces a report and stores the calibration data for trending, incipient failure detection, and other purposes.

Calibration of Temperature Sensors

Temperature sensors such as RTDs and thermocouples are calibrated using a constant-temperature bath and a standard thermometer. The type of calibration bath used depends on the temperature range, the accuracy requirements, and the application of the sensor. For example, for the calibration of

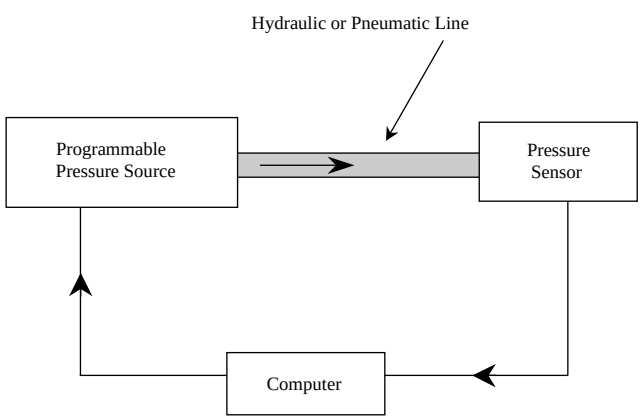

FIG. 1.8g
Principle of an automated pressure sensor calibration system.

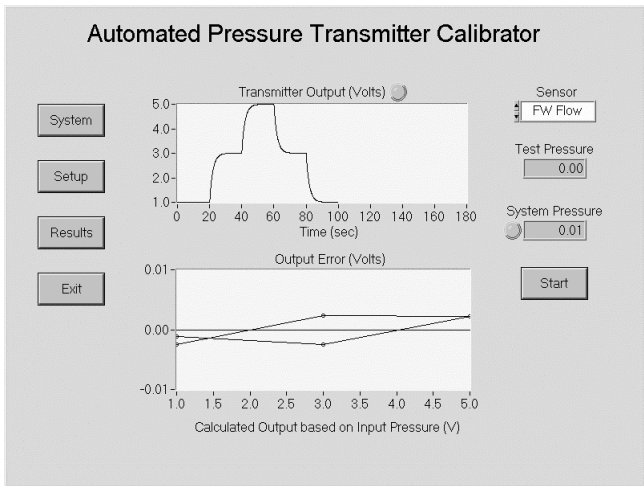

FIG. 1.8h
Calibration results from automated calibration.

primary and secondary temperature standards, melting- or freezing-point cells are used. These cells are made of such material as tin, zinc, silver, and gold whose melting or freezing temperatures are set by nature and are accurately known. These cells are referred to as *intrinsic standards*. These *fixed-point cells* are expensive, difficult to maintain, and normally are used only in standard laboratories.

For the calibration of average temperature sensors, the fixed-point cells are seldom used. The more likely choice for a reference cell is an ice bath, an oil bath, or an electric furnace-controlled bath. As shown in Figure 1.8i, the sensor to be calibrated is installed in a temperature bath along with a standard reference sensor. The reference sensor is used to measure the bath temperature. A data table is then made of the bath temperature vs. the output of the sensor being calibrated. This procedure is repeated for a number of widely spaced temperatures covering the temperature range of the sensor.

Each pair of measurements is referred to as a *calibration point*. The number of calibration points depends on the type of sensor and the temperature range. For RTDs, three calibration points may be sufficient, whereas thermocouples normally require a larger number. This is because the temperature vs. resistance relationship of RTDs is quadratic, but the thermocouple output relates to temperature by a higher-order polynomial. The calibration data is then fit to an interpolation equation, and the constants of the equation are identified and used to produce a calibration table for the sensor. The calibration table should not be extrapolated much beyond the calibration end points. A good rule of thumb is to extrapolate the calibration table above the highest calibration point or below the lowest calibration point by no more than 20%.[2]

Automated equipment is often used in the calibration of temperature sensors. These systems automatically control and change the bath temperature, record the reading of both the reference sensor and the sensor(s) being calibrated, fit the

© 2003 by Béla Lipták

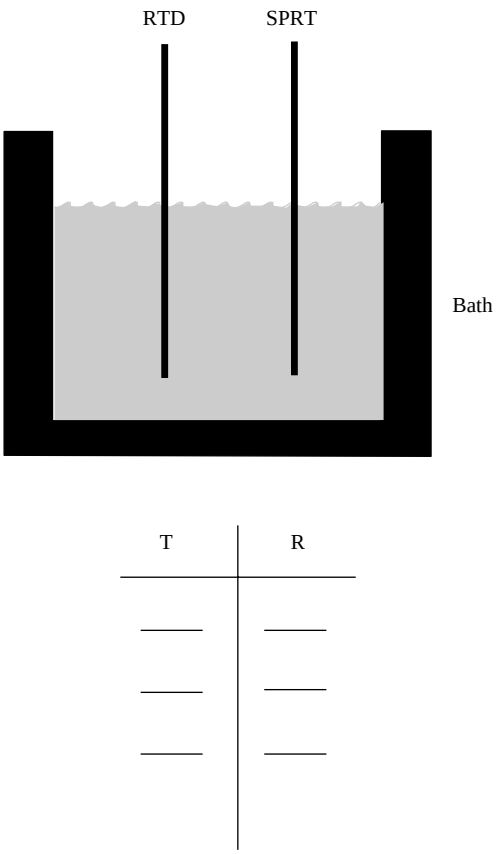

FIG. 1.8i
Temperature sensor calibration setup.

calibration data to interpolation equations, and print both a calibration table and a report or certification of the results. Using such a system, a number of sensors can be calibrated simultaneously with excellent repeatability and consistency.

Calibration Intervals

Instruments are traditionally calibrated once a year, or more often, depending on the accuracy requirements. However, due to the great advances in electronics in recent years, it has been determined that annual calibrations may not be needed for high-quality instruments, especially if an on-line monitoring system is implemented to verify their performance. This is described in detail in Section 1.9.

To determine the right calibration interval for an instrument, two pieces of information are required: (1) the accuracy requirement for the sensor and (2) the instrument drift rate. For example, if a pressure transmitter drift rate is 0.25% of span per year, and the accuracy requirement is 0.50% of span, then biannual calibrations may be sufficient. The problem is that the drift rates of most instruments are usually not known. Research has shown that instruments such as temperature and pressure sensors do not drift unidirectionally upward or downward so as to provide an opportunity to calculate an objective drift rate. Rather, these and most other instruments drift randomly within a certain band. Typically, the band is the largest at the beginning of the life cycle of the instrument, then it narrows and remains stable for a long period before it widens again as the instrument ages.

Calibration of Smart Instruments

Smart instruments such as smart pressure sensors often can be calibrated remotely and without the need for manual zero or span adjustment at the sensor location. The zero is adjusted by adding or subtracting a bias signal at the output of the sensor as necessary to offset the zero shift. The span is adjusted by changing the gain of the sensor output as necessary to make up for changes in sensor span.

The main advantage of the remote calibration of smart instruments is time conservation. For example, to calibrate a conventional pressure sensor, its cover must be removed to access the zero and span potentiometers. This can be a difficult and time-consuming task when the pressure sensor is installed in a harsh industrial environment.

Assessment of Accuracy

The accuracy of an instrument is determined from its calibration accuracy, environmental effects on calibration, and instrument drift rate. Right after calibration, the accuracy of an instrument is derived from the accuracy of the calibration standard and the calibration process. Next, the effects of the environment on the calibration must be determined. For example, the calibration of a pressure sensor is often changed by variations in the ambient temperature. In the case of differential-pressure sensors, changes in the static pressure of the process can also change the calibration. The manufacturer can usually provide data on temperature and static pressure effects on accuracy. The errors caused by these effects must be combined with the calibration errors to arrive at the total error of the installed sensor.

Next, the instrument drift must be accounted for in determining the total error. Usually, the drift error is added to the sum of calibration error and the errors due to the environmental effects so as to calculate the total error. The inaccuracy of the sensor is then stated based on this total error. A common formula for determining the total error is

$$\text{Total error} = \text{Root sum squared (RSS) of random errors} + \text{Sum of bias errors} \qquad \textbf{1.8(1)}$$

Typically, the total error may be a number like 0.35% of span, of range, or of the actual indicated value, depending on the type of sensor used. This number, although an indication of the total error, is referred to as the *inaccuracy* or *uncertainty* of the instrument.

Calibration and Range Setting

Calibration and range setting are the same in case of analog transmitters. As for intelligent devices, calibration and range setting are different. For example, for smart (HART) transmitters, calibration is called *trim* to distinguish it from range.

© 2003 by Béla Lipták

For fieldbus devices, ranging is called *scale* to distinguish it from calibration. Ranging is accomplished by selecting input values at which the outputs are 4 mA and 20 mA, while calibration is performed to correct the sensor reading when it is inaccurate.

For example, if a differential-pressure sensor has a lower range limit (LRL) of −200 inches of water and an upper range limit (URL) of +200 inches of water, and if one wants to use it to measure a differential pressure in the range of 0 to 100 inches of water, then both the LRV and the URV settings must be changed. This adjustment would "range" (increase) the lower range value (LRV) to equal 0 and lower the upper range value (URV) to be 100 inches of water. Note that this is ranging and not calibration. Calibration is when at zero differential pressure the transmitter reading is found to be 1 inch of water and it is corrected to read 0 inches of water.

References

1. EPRI Topical Report, *On-Line Monitoring of Instrument Channel Performance*, TR-104965-R1 NRC SER, Electric Power Research Institute, Final Report, Palo Alto, CA, September 2000.
2. Hashemian, H. M. et al., *Aging of Nuclear Plant Resistance Temperature Detectors*, U.S. Nuclear Regulatory Commission, Report Number NUREG/CR-5560, Washington, DC, June, 1990.

© 2003 by Béla Lipták

1.9 Response Time and Drift Testing

H. M. HASHEMIAN (2003)

Off-line calibration of the zero and span of measurement was the topic of the previous section. In this section, the on-line methods of response time determination and calibration verification will be described for sensors that have already been installed in operating processes. As in Section 1.8, the discussion here will also focus on temperature and pressure sensors.

FUNDAMENTALS OF RESPONSE TIME TESTING

The response time of an instrument is measured by applying a dynamic input to it and recording the resulting output. The recording is then analyzed to measure the response time of the instrument. The type of analysis is a function of both the type of instrument under test and on the type of dynamic input applied, which can be a step, a ramp, a sine wave, or even just random noise.

The terminology used in connection with time response to a step change was defined in Figure 1.3z. The time constant (T) of a first-order system was defined as the time required for the output to complete 63.2% of the total rise (or decay) resulting from a step change in the input. Figures 1.9a and 1.9b show the responses of instruments to both step changes and ramps in their inputs and identify the time constant (T) and response times (τ) of these instruments.

As shown in Figure 1.9a, the time constant of an instrument that responds as a first-order system equals its response time and it is determined by measuring, after a step change in the input, the time it takes for the output to reach 63.2% of its final value. The response of a first-order system is mathematically described by a first-order differential equation,

$$c(t) = K(1 - e^{-t/\tau}) \qquad \textbf{1.9(1)}$$

where

c = output
t = time
K = gain
τ = time constant of the instrument

The 63.2% mentioned earlier is obtained from this equation by calculating the output when the time equaling the time constant ($t = \tau$) has passed.

$$c(\tau) = K(1 - e^{-1}) = 0.632\ K \qquad \textbf{1.9(2)}$$

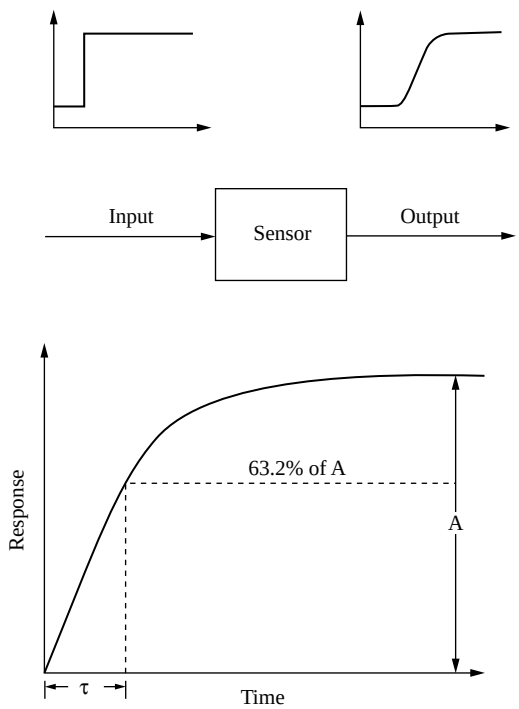

FIG. 1.9a
Illustration of step response and calculation of time constant.

Although most instruments are not first-order systems, their response time is often determined as if they were, and as if their response time were synonymous with their time constant. However, if the system is of higher than first order, there is a time constant for each first-order component in the system. In spite of this, in the field, the definition of the first-order time constant is often also used in connection with higher-order systems.

The ramp response time is the time interval by which the output lags the input when both are changing at a constant rate. For a ramp input, the response time (τ) is defined as the delay shown in Figure 1.9b. This is also referred to as *ramp time delay* and can be measured after the initial transient, when the output response has become parallel with the input ramp signal. For a first-order system, the ramp time delay, response time, and time constant are synonymous. The ramp time delay can be mathematically described as

$$c(t) = C(t - \tau) \qquad \textbf{1.9(3)}$$

© 2003 by Béla Lipták

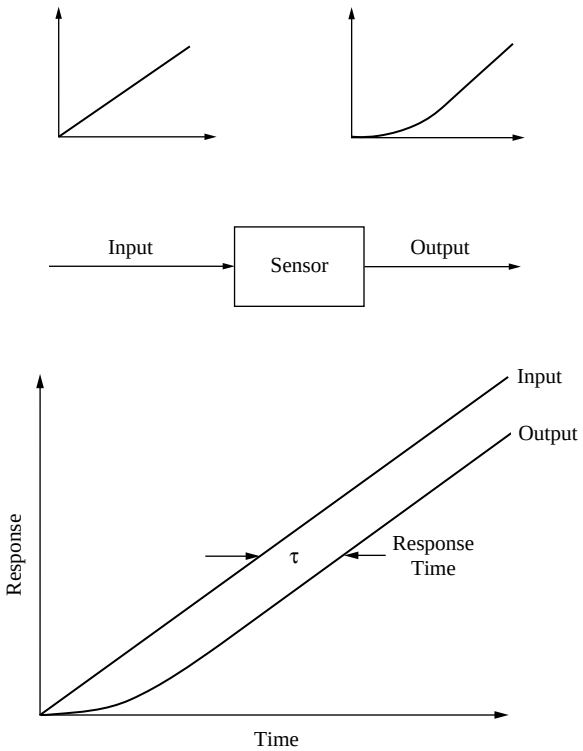

FIG. 1.9b
Illustration of ramp response and calculation of ramp time delay.

where C is the ramp rate of the input signal. The derivations of Equations 1.9(1) through 1.9(3) and the topic of Laplace transformation is covered in the second volume of the *Instrument Engineers' Handbook* and also in Reference 1.

LABORATORY TESTING

The response time of temperature sensors is measured by using a step input, whereas the response time of pressure sensors is usually detected by using ramp input signals. This is because obtaining a step change in temperature is easier and more repeatable than obtaining a step change in pressure. Ramp inputs are also preferred for the testing of pressure sensors, because a step input can cause oscillation of the pressure transmitter output, which may complicate the measurement.

Testing of Temperature Sensors

Figure 1.9c illustrates the equipment used in determining the response time of a temperature sensor. This experiment is called the *plunge test.* At the beginning of the test, the sensor is held by a hydraulic plunger, and its output is connected to a recorder. The heated sensor is then plunged into a tank of water at near-ambient temperature. This step change in temperature determines the type of transient in its output, as was illustrated in Figure 1.9a. To identify the response time of the temperature sensor, the time corresponding to 63.2% of the full response is measured.

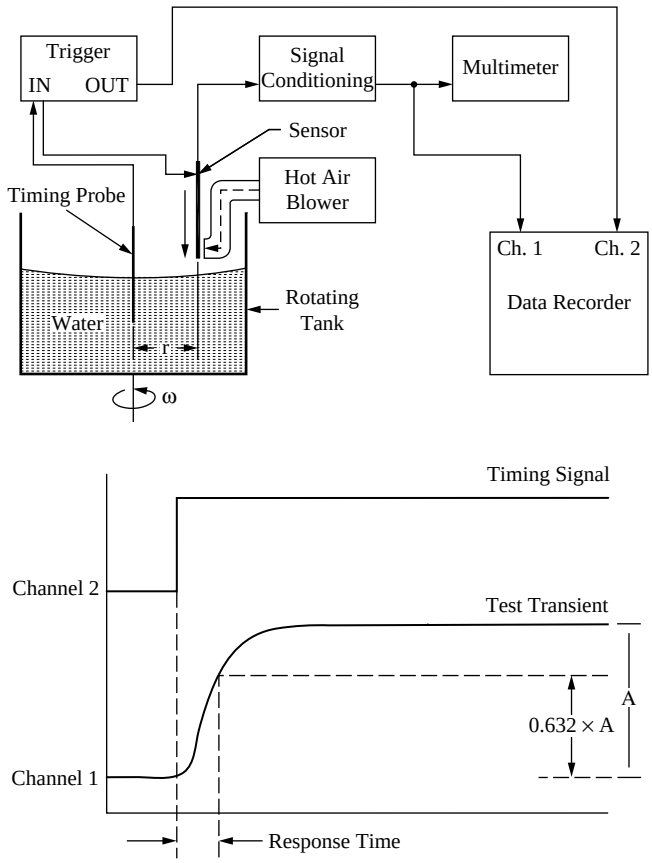

FIG. 1.9c
Plunge test setup.

Because the response time of a temperature sensor is a function of the type, flow rate, and temperature of the media in which the test is performed, the American Society for Testing and Material (ASTM) has developed Standard E644 (Reference 2), which specifies a standard plunge test. This document specifies that a plunge test should be performed in water that is at near room temperature and is flowing at a velocity of 3 ft/sec (1 m/sec). A plunge test can therefore be performed by heating the sensor and then plunging it into a rotating tank that contains water at room temperature. By controlling the speed and the radial position of the sensor, the desired water velocity can be obtained for the plunge test.

There can be other ways for performing the plunge test. For example, the sensor can be at room temperature and plunged into warm water. Although the actual temperatures have an effect on response time, this effect is usually small; therefore, the response time is not significantly different if the water is at a few degrees above or below room temperature.

Testing of Pressure Sensors

The response time of pressure sensors is usually determined by using hydraulic ramp generators, which produce the ramp test input signals. A photograph of a hydraulic ramp generator is provided in Figure 1.9d. This equipment consists of two pressure bottles, one bottle filled with gas or air and the other

© 2003 by Béla Lipták



FIG. 1.9d
Photograph of pressure ramp generator for response time testing of pressure sensors.

with water, as shown in Figure 1.9e. In the outlet from the gas bottle, an on–off and a throttling valve is provided. The setting of the adjustable valve determines the flow rate of the gas into the water bottle. Therefore, the desired ramp pressure rate can be generated by adjusting the throttling valve.

The water pressure is detected simultaneously by two sensors, a high-speed reference sensor and the sensor under test, as shown in Figure 1.9f. The outputs of the two sensors are recorded on a two-pen recorder, and the time difference (delay) between the two outputs is measured as the response time of the sensor being tested. This delay time measurement is taken after the pressure in the water bottle has reached a predetermined setpoint or after the input and output curves have become parallel.

The pressure setpoint is based on the requirements of the process where the sensor is going to be used. For example, if a full process shutdown is initiated, and if the pressure exceeds a certain upper limit, then this pressure is likely to be used as the setpoint pressure at which the response time of the pressure sensor is measured. When testing differential-pressure sensors (serving the measurement of level or flow), the setpoint pressure can be selected to correspond to the low level or flow alarm setpoint of the process. In such cases, a decreasing ramp input signal is used during the response time test and the setpoint that initiates the test reading corresponds to the low d/p pressure setting at which the alarm or shutdown is triggered in the process.

These response time measurements can be important to overall process safety if the instrument delay time is significant relative to the total time available to take corrective action after the process pressure has exceeded safe limits.

IN SITU RESPONSE TIME TESTING

The laboratory testing methods described earlier are useful for testing of sensors if they can be removed from the process and brought to a laboratory for testing, but this is often not the case. For testing installed sensors, a number of new techniques have been developed as described below. They are referred to as *in situ*, on-line, or in-place testing techniques.

To measure the in-service response time of a temperature sensor, *in situ* testing is mandatory. This is because the response time of a temperature sensor always is a function of the particular process temperature, process pressure, and process flow rate. The most critical effect is process flow rate, followed by the effect of process temperature and then pressure. The reason why the response time is affected by the process pressure and flow rate is because they affect the heat transfer of the film of the temperature-sensing surface of the detector. In contrast, the process temperature affects not only the heat transfer of the film but also the properties of the sensor internals and sensor geometry.

Consequently, it is not normally possible to accurately predict or model the effect of process temperature on the response time of temperature sensors; predicting the effects

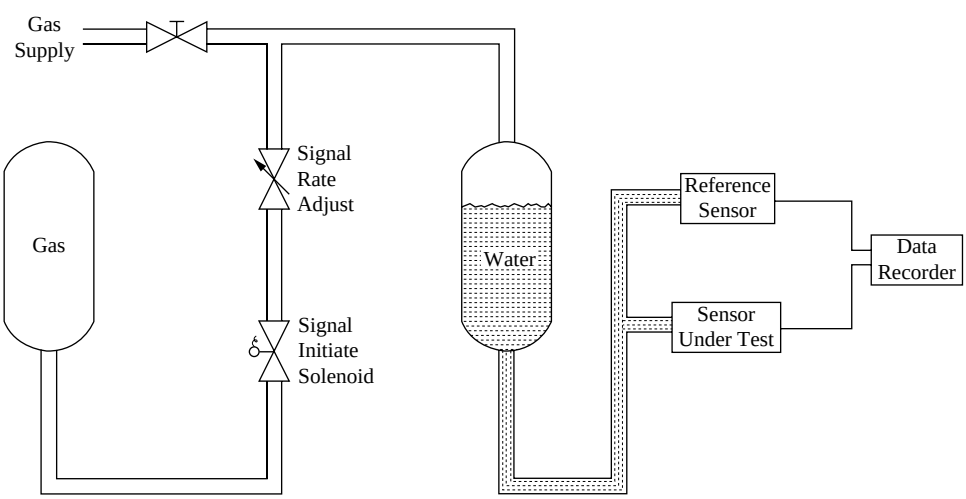

FIG. 1.9e
Simplified diagram of pressure ramp generator.

© 2003 by Béla Lipták

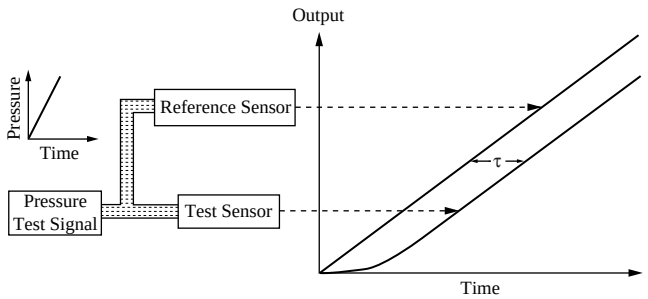

FIG. 1.9f
Ramp test setup.

of process pressure and flow rate are easier. This is because we know that, as the process pressure or flow rate increases, the heat transfer coefficient on the sensor surface also increases and causes a decrease in the response time, and vice versa. In contrast, an increase in process temperature can cause either an increase, or a decrease in the response time of a sensor. This is because, on the one hand, an increase in process temperature can result in an increase in the heat transfer coefficient, which reduces sensor response time. On the other hand, an increase in process temperature can also expand or contract the various air gaps in the internals of the temperature sensor, causing dimensional changes or altering material properties, which can increase or decrease the response times of the various sensors.

In the case of pressure sensors, the response time is normally not changed by variations in process conditions. Thus, for pressure sensors, the choice of *in situ* response time testing is based on considering the convenience of *in situ* testing and less on the basis of the accuracy of the test results. Therefore, one can measure the response time of an installed pressure sensor without removing it from the process by taking the ramp test generator (Figure 1.9d) to the installed sensor (if this can be done efficiently and safely). In fact, this operation is often tedious, time consuming, and expensive, especially in hazardous locations or in processes such as exist in nuclear power plants. Still, if one can afford it, using an *in situ* technique to measure the response time of a pressure sensor is preferred.

Testing of Temperature Sensors

The *in situ* response time testing of temperature sensors is referred to as the *loop current step response (LCSR)* test. LCSR is performed by electrically heating the temperature sensor by sending electric current through the sensor extension leads. This causes the temperature of the sensor to rise above the ambient temperature. Depending on the sensor involved, the amount of current and the amount of temperature rise used in the LCSR test can be adjusted. When testing resistance temperature detectors (RTDs), the use of 30 to 50 mA of DC current is normally sufficient. This amount of current raises the internal temperature of the RTD sensor by about 5 to 10°C (8 to 18°F) above the ambient temperature, depending on the RTD and the process fluid surrounding it.

For thermocouples, a higher current (e.g., 500 mA) is typically required. This is because the electrical resistance of a thermocouple is distributed along the length of the thermocouple leads, but the resistance of an RTD is concentrated at the tip of the sensing element. In the case of thermocouples, the LCSR current heats the entire length of the thermocouple wire, not only the measuring junction. Because, in testing thermocouples, we are interested only in heat transfer at the measuring junction, it is preferred to heat up the thermocouple first and measure its output only after the heating current has been turned off. Also, for LCSR testing of thermocouples, AC current is used instead of DC to avoid Peltier heating or cooling, which can occur at the thermocouple junction if DC current is used. The direction of the DC current determines whether the measuring junction is cooled or heated.

Testing RTDs As shown in Figure 1.9g, a Wheatstone bridge is used in the LCSR testing of RTDs. The RTD is connected to one arm of the bridge, and the bridge is balanced while the electrical current in the circuit is low (switch is open). Under these conditions, the bridge output is recorded, and the current is then switched to high (switch closed) to produce the bridge output for the LCSR test shown in Figure 1.9h. In preparing for the LCSR test, the power supply is adjusted to provide a low current within the range of 1 to 2 mA and a high current in the range of 30 to 50 mA. The actual values depend on the RTD and on the environment in which the RTD is operating. In addition, the amplifier gain is adjusted to give an output in the range of 5 to 10 V for the bridge.

Figure 1.9i shows a typical LCSR transient for a 200-Ω RTD that was tested with about 40 mA of current in an operating power plant. In some plants, because of process

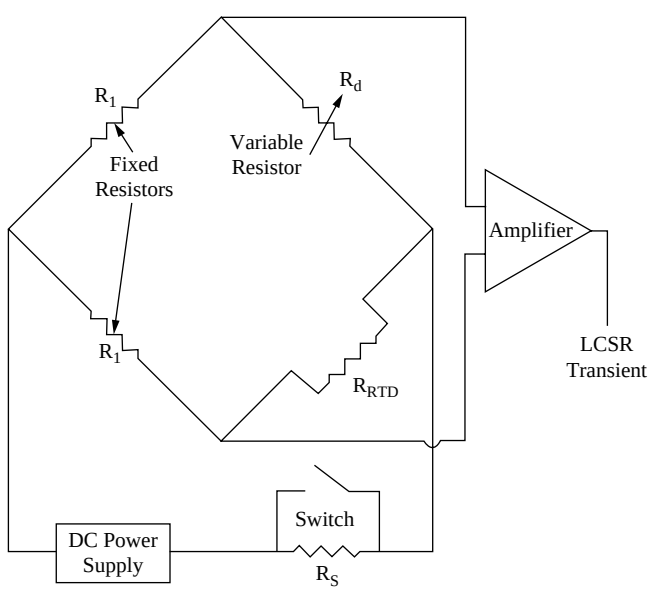

FIG. 1.9g
Wheatstone bridge for LCSR test of RTDs.

© 2003 by Béla Lipták

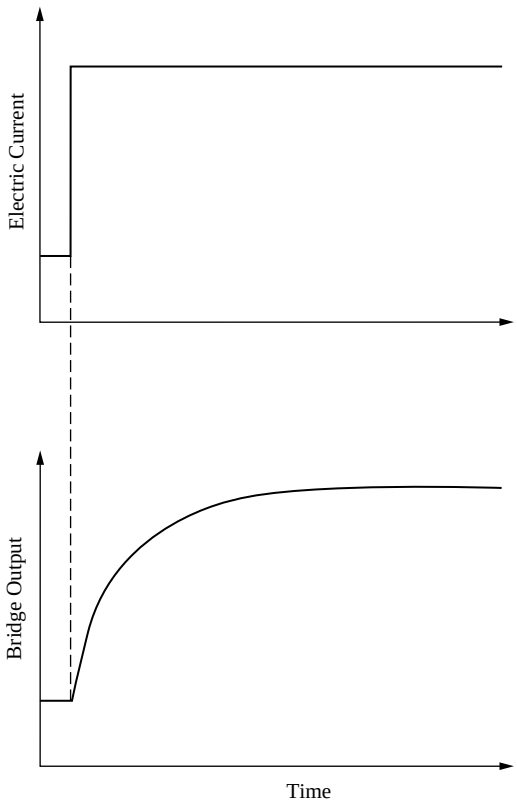

FIG. 1.9h
Principle of LCSR test.

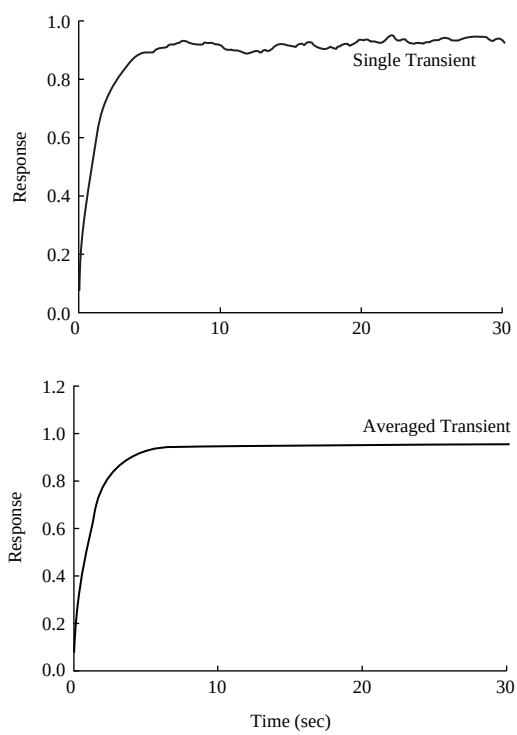

FIG. 1.9i
In-plant LCSR transients for RTDs.

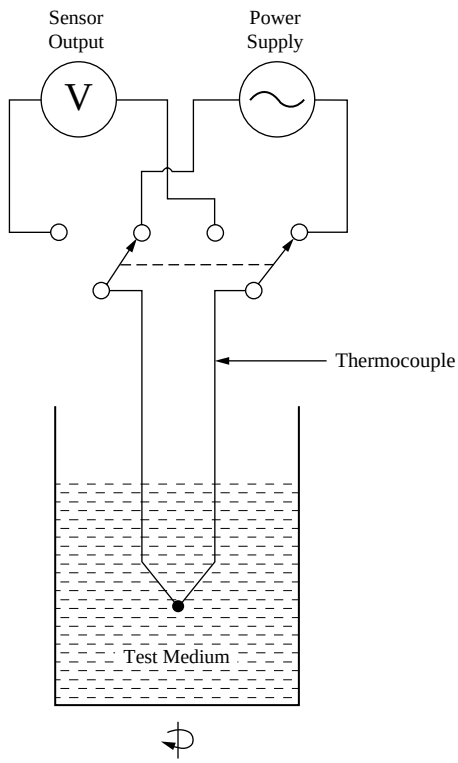

FIG. 1.9j
Simplified schematic of LCSR test equipment for thermocouples.

temperature fluctuations, the LCSR transient is not as smooth as shown in Figure 1.9i. In such cases, the LCSR test is repeated several times on the same RTD, and the results are averaged to obtain a smooth LCSR transient as in Figure 1.9i. The LCSR test duration is typically 30 sec for RTDs mounted in fast-response thermowells and tested in flowing water. The LCSR test duration, when the sensor is detecting the temperature of liquids, typically ranges from 20 to 60 sec but is much longer for air or gas applications.

Testing Thermocouples The LCSR test equipment for thermocouples includes an AC power supply and circuitry shown in the schematic in Figure 1.9j. The test is performed by first applying the AC current for a few seconds while the thermocouple is heated above the ambient temperature. After that, the current flow is terminated, and the thermocouple is connected to a millivolt meter to record its temperature as it cools down to the ambient temperature (Figure 1.9k). The millivolt output records a transient representing the cooling of the thermocouple junction alone. The rate of cooling is a function of the dynamic response of the thermocouple.

Figure 1.9l shows an LCSR transient of a thermocouple that was tested in flowing air. As in the case of RTDs, LCSR transients for thermocouples can also be noisy as a result of fluctuations in process temperature and other factors. To overcome noise, the LCSR test can be repeated a few times, and the resulting transients can be averaged to produce smooth

© 2003 by Béla Lipták

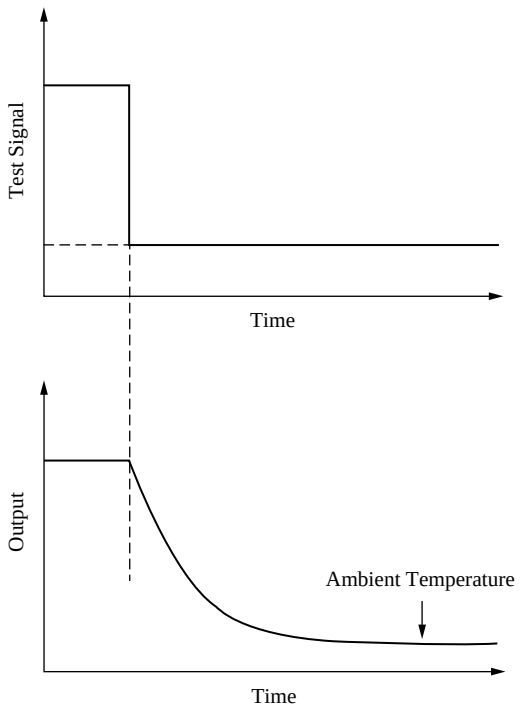

FIG. 1.9k
Illustration of LCSR test principle for a thermocouple.

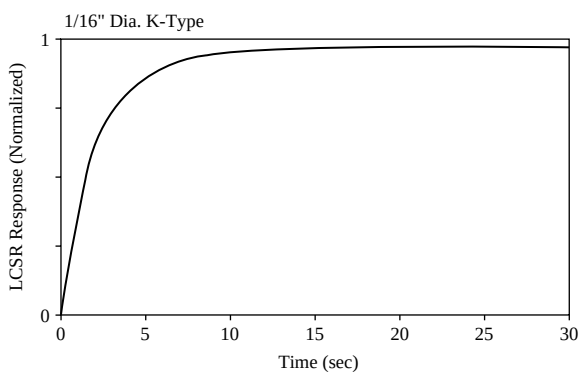

FIG. 1.9l
LCSR transient from a laboratory test of a sheathed thermocouple.

LCSR results. In the case of thermocouples, extraneous high-frequency noise superimposed on the LCSR transient can be removed by electronic or digital filtering.

Analysis of LCSR Test Results The raw data from the LCSR test cannot be interpreted easily into a response time reading. This is because the test data is the result of step change in temperature inside the sensor, whereas the response time of interest should be based on a step change in temperature outside the sensor. Fortunately, the heat from inside the sensor to the ambient fluid is transferred through the same materials as the heat that is transferred from the process fluid to the sensor (Figure 1.9m). Therefore, the sensor response due to internal temperature step (LCSR test) and external temperature step

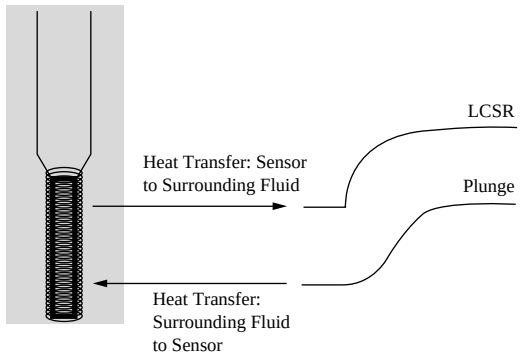

FIG. 1.9m
Heat transfer process in plunge and LCSR tests.

(plunge test) are related if the heat transfer is unidirectional (radial) and the heat capacity of the sensing element is insignificant. These two conditions are usually satisfied for industrial temperature sensors. Nevertheless, to prove that the LCSR test is valid for an RTD or a thermocouple, laboratory tests using both plunge and LCSR methods should be performed on each sensor design to ensure that the two tests produce the same results.

Because, for most sensors, the heat transfer path during LCSR and plunge tests is usually the same, one can use LCSR test data to estimate the sensor response of a plunge test where the step change in temperature occurs outside the sensor. The equivalence between the two tests has been shown mathematically (theoretically) as well as in numerous laboratory tests (see References 3 through 5). Therefore, it can be concluded that the test results gained from internal heating of a sensor (LCSR) can be analyzed to yield the response time of a sensor to a step change in temperature that occurred in the medium outside the sensor.

One can mathematically prove the similarities between the transient outputs, which are generated by the same temperature sensor, when evaluated by the plunge and the LCSR tests. For the plunge test, the sensor output response $T(t)$ to a step change in the temperature of the surrounding fluid is given by

$$T(t) = A_0 + A_1 e^{-t/\tau_1} + A_2 e^{-t/\tau} + \cdots \qquad \textbf{1.9(4)}$$

Each of the three (or more) elements in Equation 1.9(4) is referred to as a mode, while the terms τ_1 and τ_2 are called the *modal time constants*, and the terms (A_0, A_1, A_2,…) are called the *modal coefficients*. For the LCSR test, the sensor output response $T'(t)$ to a step change in the temperature inside the sensor is given by

$$T'(t) = B_0 + B_1 e^{-t/\tau_1} + B_2 e^{-t/\tau_2} + \cdots \qquad \textbf{1.9(5)}$$

Note that the exponential terms in the above two equations are identical; only their modal coefficients are different. The response time (τ) of a temperature sensor is defined by Equation

© 2003 by Béla Lipták

1.9(5), and it is therefore independent of the modal coefficients, although it does depend on the modal time constants.

$$\tau = \tau_1\left[1 - ln\left(1 - \frac{\tau_2}{\tau_1}\right) - ln\left(1 - \frac{\tau_3}{\tau_1}\right)\ldots\right] \qquad \textbf{1.9(6)}$$

The other terms in the equation are the natural logarithm, *ln*, and the response time (τ) of the sensor. Therefore, one might list the steps required in the LCSR test to obtain the response time of a temperature sensor as follows:

1. Perform the LCSR test and generate the raw data.
2. Fit the LCSR data to Equation 1.9(5) and identify the modal time constants (τ_1, τ_2,…).
3. Use the results of Step 2 in Equation 1.9(6) to obtain the sensor response time.

The above procedure has been successfully used for determining the response times of both RTDs and thermocouples, both in laboratory and *in situ* applications. As a result, it has been demonstrated that the LCSR test can determine the response time of a temperature sensor within about 10% of the conclusions of a plunge test if both were performed under the same conditions.

Applications of LCSR Testing Nuclear industry applications of the LCSR test include the response time determination of reactor coolant temperature sensors. The LCSR technique has been approved by the U.S. Nuclear Regulatory Commission (NRC) for *in situ* measurement of the response time of RTDs in nuclear power plants.[6] The LCSR test has also been used in aerospace applications to correct transient temperature data and in solid rocket motors to determine the quality of the bonding of thermocouples with the solid materials such as the nozzle liners.[7]

In addition to response time measurements, the LCSR test has been used for sensor diagnostics such as

1. The *in situ* determination of discontinuities or nonhomogeneities in thermocouples.[8] In this case, the purpose of running the LCSR test on the thermocouple is to check if the resulting LCSR signal is normal. This test is especially useful if a reference set of baseline LCSR data is available, representing the test results on normal thermocouples so that gross nonhomogeneities can be easily noted.
2. Determining if "strap-on" RTDs are properly bonded to pipes or tubes. In case of the Space Shuttle main engine,[7] in an experiment, the LCSR test was used to verify the quality of "strap-on" RTD bonding within the fuel lines. In this application, the RTD-based temperature measurement is used to detect fuel leakages.
3. Verifying the bonding of strain gauges to solid surfaces. Figure 1.9n illustrates how the transients resulting from LCSR tests change as a function of the strength of RTD bonding to the pipe. Therefore, the LCSR test can determine the degree of bonding between the solid surface and RTDs or strain gauges (Figure 1.9o).

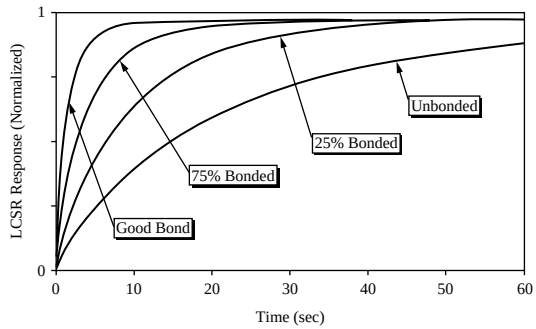

FIG. 1.9n
LCSR test to verify the attachment of a temperature sensor to a solid surface.

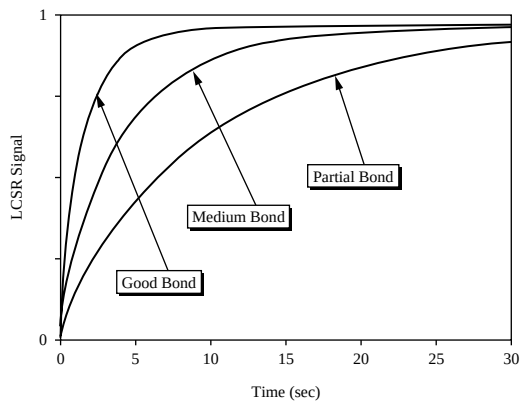

FIG. 1.9o
LCSR test to verify the attachment of a strain gauge to a solid surface.



FIG. 1.9p
RTD response time test equipment.

Figures 1.9p and 1.9q illustrate the commercial equipment used in LCSR testing of RTDs and thermocouples. In Figure 1.9p, an LCSR test system includes six channels for RTD response time measurements so that six RTDs can be simultaneously tested. This system automatically performs the LCSR test, obtains and analyzes the LCSR data, and

© 2003 by Béla Lipták

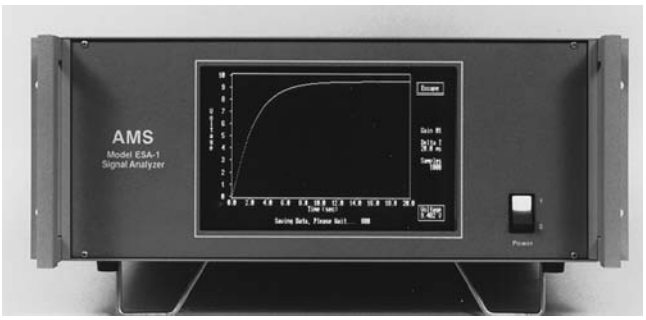

FIG. 1.9q
Thermocouple response time test analyzer.

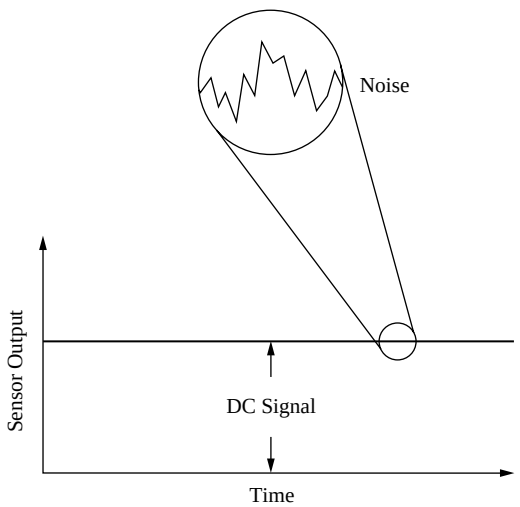

FIG. 1.9r
Principle of noise analysis technique.

determines the response times for each RTD. The system can send the data to a printer and print a table of RTD response times. A response time test transient display of a thermocouple is illustrated in Figure 1.9q.

In Situ Testing of Pressure Sensors

The response time of installed pressure sensors can be measured remotely while the plant is in operation. This technique is called *noise analysis* and is based on the monitoring of the normally present fluctuations of the pressure transmitter output signals. In Figure 1.9r, such an output signal is shown at a steady state that corresponds to the normal process pressure. This steady-state value is referred to as the DC reading. When magnified, it displays some small fluctuations. This magnified signal is called the noise or the AC component of the signal.

Analyzing of Noise Data The noise is produced by two sources. The first source is the fluctuation of the process pressure caused by turbulence, random heat transfer, vibration, and other effects. Second, there is electrical noise superimposed on the pressure transmitter output signal. Fortunately, these two phenomena occur at widely different frequencies and thus

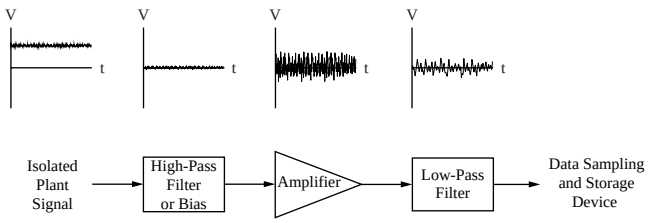

FIG. 1.9s
Block diagram of the noise data acquisition equipment.

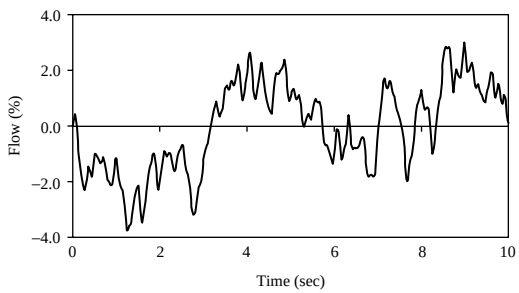

FIG. 1.9t
Raw noise data from a flow sensor in a power plant.

can be separated by filtering. This is necessary, because only the process pressure fluctuations are of interest.

Figure 1.9s illustrates how the noise can be extracted from a raw signal that includes both the DC and the AC components. The first step to remove the DC component is by adding a negative bias or by *highpass* electronic filtering. Next, the signal is amplified and passed through a lowpass filter, which removes the extraneous noise and provides for *anti-aliasing*. Next, the signal is sent through an analog-to-digital (A/D) converter and subsequently to a data acquisition computer. The computer samples the data and stores it for analysis.

The raw noise data from a pressure transmitter (Figure 1.9t) represents the natural process pressure fluctuations and includes the information required to determine the response time of the pressure sensor that generated the steady-state (DC) signal. The raw noise data is a small portion of a noise record, which is normally about 30 to 60 min.

For noise data analysis, the two techniques available are the frequency-domain analysis and the time-domain analysis. The first uses the power spectral density (PSD) technique involving fast Fourier transform (FFT). The PSD is obtained by bandpass filtering the raw signal in a narrow frequency band and calculating the variance of the result. This variance is divided by the width of the frequency band, and the results are plotted as a function of the center frequency of the band pass. This procedure is repeated from the lowest to the highest expected frequencies of the raw signal to obtain the PSD. In Figure 1.9u, the frequency spectrum of the noise signal from a pressure transmitter in an operating power plant is shown against PSD. If the pressure transmitter is a first-order system, its response time can be determined on the basis of measuring the break frequency of the PSD as shown in Figure 1.9v.

© 2003 by Béla Lipták

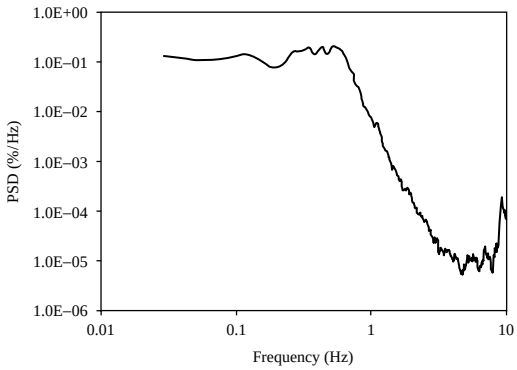

FIG. 1.9u
Pressure sensor PSD.

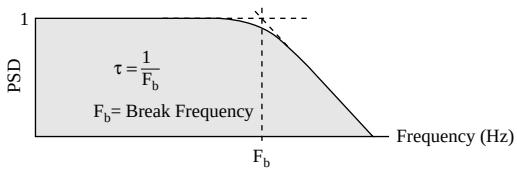

FIG. 1.9v
First-order system PSD.

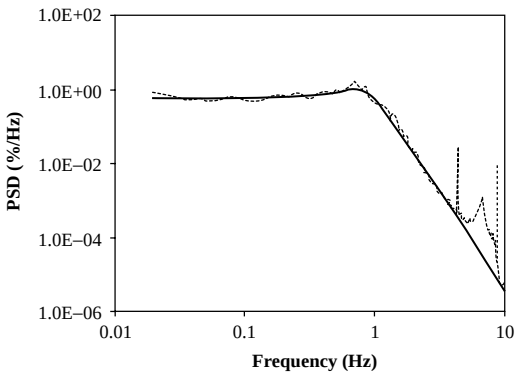

FIG. 1.9w
Flow sensor PSD and its model fit.

However, pressure sensors are not necessarily first order, and PSD plots for actual process signals are not smooth enough to allow the accurate measurement of the break frequency. In addition, PSDs often also contain resonance and other disturbances that further complicate the response-time analysis. Therefore, both experience and a validated dynamic model of the sensor are needed to obtain the sensor response time by analyzing a PSD plot. The model, which usually is a frequency-domain equation, is fit to the PSD to yield the model parameters, which are then used to calculate the response time of the pressure sensor. A PSD for a flow sensor in an operating power plant and its model fit are shown in Figure 1.9w.

Autoregressive (AR) modeling is used for noise data analysis in the time domain. An AR model is a time series equation to which the noise data is fit and the model parameters are calculated. These parameters are then used to calculate the response time of the sensor.[9] Time-domain analysis is generally simpler to code in a computer and therefore is preferred for automated analysis. However, in time-domain analysis, it is often difficult to remove noise data components that are unrelated to the sensor response time. For example, if the noise data contains very low-frequency process fluctuations, the AR model will take them into account. In such a case, it gives an erroneously large response time value. In contrast, in frequency-domain analysis, it is easier to ignore low-frequency process fluctuations and to fit the PSD to that portion of the data that most accurately represents the sensor.

Commercial, off-the-shelf equipment is available for both the frequency-domain and the time-domain analysis of noise data. A number of companies provide spectrum analyzers (also called FFT analyzers), which take the raw noise data from the output of a sensor and provide the necessary conditioning and filtering to analyze it and calculate the sensor response time. However, because of resonance and other influences, simple FFT analysis does not always yield the correct response time reading. This is not a shortcoming of the FFT equipment but a consequence of the inherent nature of the input signal with which they must work.

ON-LINE VERIFICATION OF CALIBRATION

The calibration of installed instruments such as industrial pressure sensors involves (1) the decision whether calibration is needed at all and (2) the actual calibration, when necessary. The first step can be automated by implementing an on-line drift monitoring system. This system samples the steady-state output of operating process instruments and, if it is found to have drifted, it calls for it to be calibrated. Conversely, if there is no (or very little) drift, the instrument is not calibrated at all (or calibrated less frequently). The accuracy requirements of the sensor involved determines the amount of allowable drift.

Drift Evaluation Using Multiple Sensors

In drift evaluations, it is necessary to distinguish the drift that occurs in the process from instrument drift before a reference limit of "allowable drift" can be defined. For example, if redundant sensors are used to measure the same process parameter, their average reading can be assumed to closely represent the process and used as the reference. This is done by first sampling and storing the normal operating outputs of the redundant instruments and then averaging these readings for each instant of time. These average values are then subtracted from the corresponding individual readings of the redundant instruments to identify the deviation of each from the average.

© 2003 by Béla Lipták

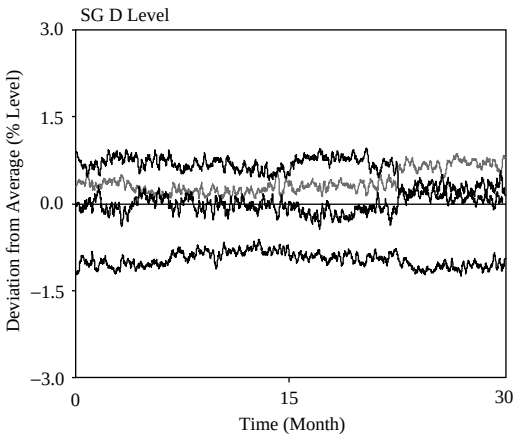

FIG. 1.9x
On-line monitoring data for steam generator level transmitters.

In Figure 1.9x, the results of on-line monitoring of four steam-generator level transmitters in a nuclear power plant are shown. The difference between the average of the four transmitters and the individual readings are shown on the *y* axis as a function of time in months. The data are shown for a period of about 30 months of operation, and the four signals show no significant drift during this period. Consequently, one can conclude that the calibration of these transmitters did not change and, therefore, they do not need to be recalibrated. If it is suspected that all four transmitters are drifting in an identical manner (drifting together in one direction), the data for deviation from the average would not reveal the drift. Therefore, to rule out any systematic or common drift, one of the four transmitters can be recalibrated.

Empirical Models, Neural Networks Another approach for detecting systematic drift is to obtain an independent estimate of the monitored process and track that estimate along with the indication of the redundant sensors. Both empirical and physical modeling techniques are used to estimate systematic drift. They each monitor various related process variables and, based on their values, evaluate the drift in the monitored parameter. For example, in a process involving the boiling of water (without superheating of the steam), temperature and pressure are related. Thus, if temperature is measured, the corresponding saturated steam pressure can be easily determined, tracked, and compared with the measured pressure as a reference to identify systematic drift. The use of this method of drift detection does not require the use of multiple sensors, and individual sensors can also be tracked and their calibration drift evaluated on line.

The relationship between most process variables is much more complex than the temperature–pressure relationship of saturated steam. Therefore, most process parameters cannot be evaluated from measurement of another variable. In addition, an in-depth knowledge of the process is needed to provide even an estimate of a parameter on the basis of physical

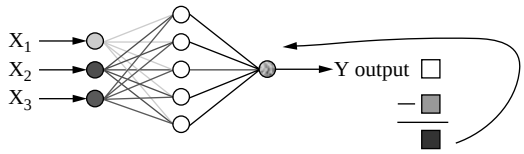

FIG. 1.9y
Illustration of training of a neural network.

models. Therefore, for the verification of on-line calibration, empirical models are often preferred. Such empirical models use empirical equations, neural networks, pattern recognition, and sometimes a combination of these, including fuzzy logic for data clustering, are used to generate the model's output(s) based on its multiple inputs.[10–14]

Before using the empirical model, it is first trained under a variety of operating conditions. As shown in Figure 1.9y, if the output parameter (y) is to be estimated on the basis of measuring the input parameters x_1, x_2, and x_3, then, during the training period, weighting factors are applied to the input variables. These factors are gradually adjusted until the difference between measured output and the output of the neural network is minimized. Such training can continue while the neural network learns the relationship between the three inputs and the single output, or while additional input and output signals are provided to minimize the error in the empirical model. Training of the model is completed when the measured output is nearly identical to the estimate generated by the neural network. Once the training is completed, the output of the model can be used for drift evaluation or control purposes.

An on-line calibration monitoring system might use a combination of averaging of redundant signals (averaging can be both straight and weighted), empirical modeling, physical modeling, and calibrated reference sensor(s) in a configuration similar to the one shown in Figure 1.9z. In such a system, the raw data is first screened by a data-qualification algorithm and then analyzed to provide an estimate of the process parameter being monitored. In the case of averaging analysis, a consistency algorithm is used to make sure that a reasonable agreement exists among the redundant signals and that unreasonable readings are either excluded or weighted less that the others before the signals are averaged. Such systems as the one illustrated in Figure 9.1z can be considered for both power plants and chemical industry applications for the on-line verification of the calibration requirements of process sensors.

The data for on-line monitoring can be obtained from the plant computer or from a dedicated data acquisition system. Figure 1.9aa illustrates a data acquisition system used in a power plant for on-line calibration monitoring purposes. The computer applies the on-line calibration algorithms and, based on the sampled data from a variety of process instruments, provides such information as plots of deviation for each instrument from a process estimate and a listing of instruments that have drifted. The data acquisition system

© 2003 by Béla Lipták

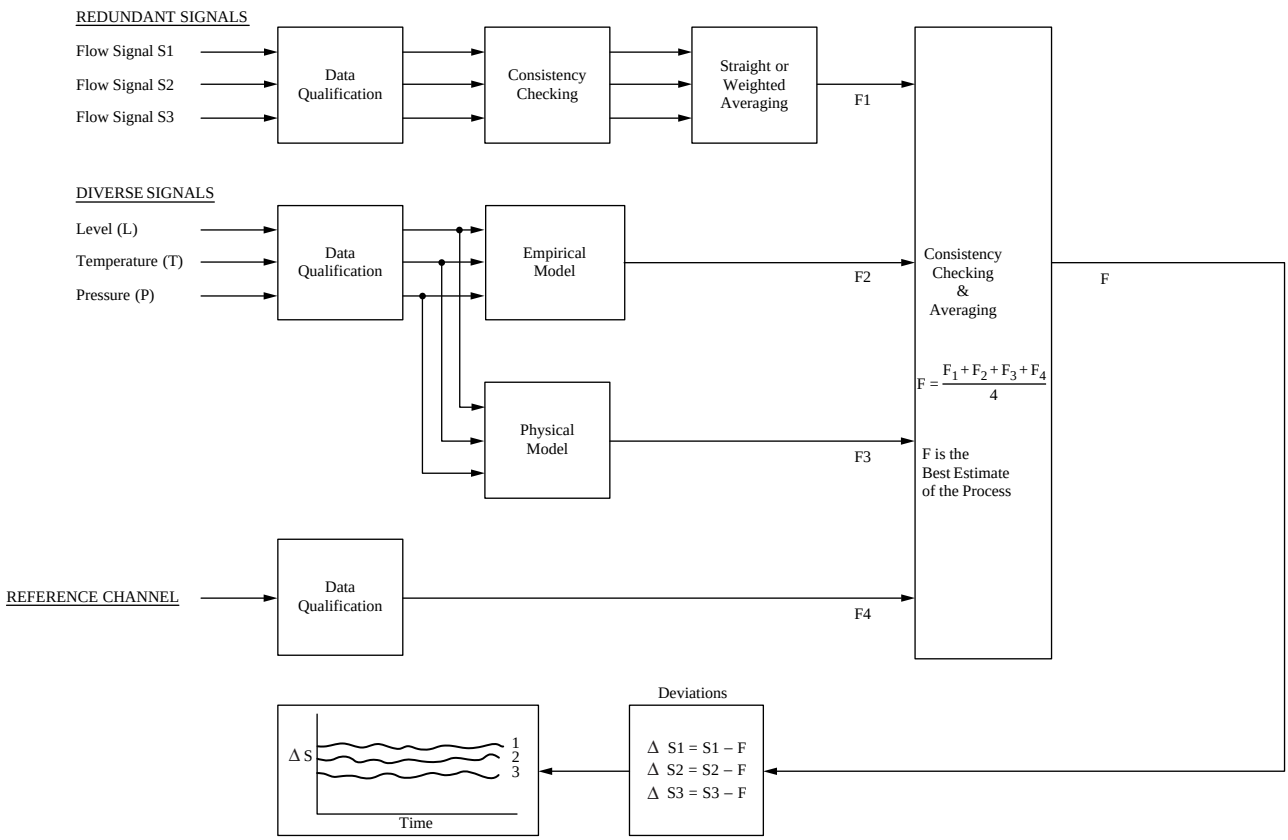

FIG. 1.9z
Conceptual design of an on-line monitoring system.

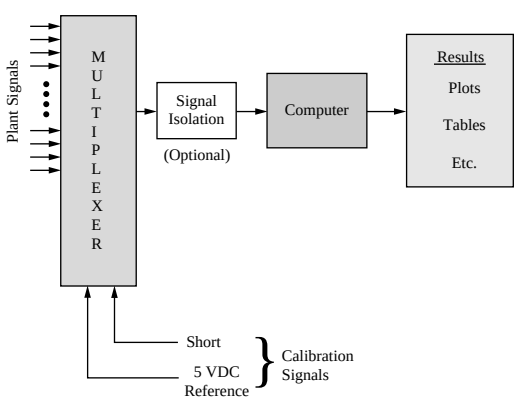

FIG. 1.9aa
Dedicated system.

includes its own calibration signals so that test equipment drift can be isolated from the drift that occurs in process instruments. If on-line monitoring data is already available in the plant computer, it can be stored or analyzed to provide calibration verification results.

On-line calibration monitoring identifies calibration problems at the monitored point (i.e., the process operating conditions). As such, the above approach may be labeled as a one-point calibration check. To verify the calibration of instruments over their entire range, on-line monitoring data shall also be collected during plant startup and shutdown episodes. With data from these episodes, the instrument calibration can be verified for a wide range.

According to research data on pressure transmitters in nuclear power plants,[14] about 70% of the time, the one-point calibration monitoring can reveal calibration problems throughout the instrument range. This is because the drift in pressure transmitters is usually due to a zero shift, which does affect the entire operating range of the transmitter.

References

1. Hashemian, H. M. et al., Effect of Aging on Response Time of Nuclear Plant Pressure Sensors. U.S. Nuclear Regulatory Commission, NUREG/CR-5383, 1989.
2. American Society for Testing and Materials (ASTM), *Standard Methods for Testing Industrial Resistance Thermometers*, Standard E 644 78, Annual Book of ASTM Standards, Part 44, Philadelphia, PA, 1979.
3. Hashemian, H. M., New Technology for Remote Testing of Response Time of Installed Thermocouples, United States Air Force, Arnold Engineering Development Center, Report No. AEDC-TR-91–26, Vol. 1, Background and General Details, 1992.

© 2003 by Béla Lipták

4. Hashemian, H. M. and Petersen, K. M., Loop current step response method for in-place measurement of response time of installed RTDs and thermocouples, in *Proceedings of American Institute of Physics, Seventh International Symposium on Temperature*, Vol. 6, 1151–1156, Toronto, Can., 1992.
5. Hashemian, H. M. et al., Advanced Instrumentation and Maintenance Technologies for Nuclear Power Plants, U.S. Nuclear Regulatory Commission, NUREG/CR-5501, August 1988.
6. NUREG-0809, Review of Resistance Temperature Detector Time Response Characteristics, U.S. Nuclear Regulatory Commission, Washington, D.C., 1981.
7. Hashemian, H. M., Shell, C. S., and Jones, C. N., New Instrumentation Technologies for Testing the Bonding of Sensors to Solid Materials, National Aeronautics and Space Administration, Marshall Space Flight Center, NASA/CR-4744, 1996.
8. Hashemian, H. M. and Petersen, K. M., Measurement of performance of installed thermocouples, in *Proceedings of Aerospace Industries and Test Measurement Divisions of The Instrument Society of America, 37th International Instrumentation Symposium*, 913–926, ISA Paper #91–113, San Diego, CA, 1991.
9. Glocker, O. and Upadhyaya, B. R., *Results and Interpretation of Multivariate Autoregressive Analysis Applied to Loss-of-Fluid Test Reactor Process Noise Data*, SMORN-V, Vol. 21, *Progress in Nuclear Energy*, Pergamon Press, Burlington, MA, 447–456, 1988.
10. Hashemian, H. M., On-Line Testing of Calibration of Process Instrumentation Channels in Nuclear Power Plants, U.S. Nuclear Regulatory Commission, NUREG/CR-6343, 1995.
11. Upadhyaya, B. R., Glocker, O., and Eklund, J. J., Multivariate statistical signal processing technique for fault detection and diagnostics, *ISA Transactions*, 29(4), 79–95, 1990.
12. Tsoukalas, L. H. and Uhrig, R. E., *Fuzzy and Neural Approaches in Engineering*, John Wiley & Sons, New York, 1997.
13. Fantoni, P. F., Figedy, S., and Papin, B., A Neuro-Fuzzy Model Applied to Full Range Signal Validation of PWR Nuclear Power Plant Data, Second OECD Specialist Meeting on Operator Aids for Severe Accident Management (SAMOA-2), Lyon, France, 1997.
14. EPRI Topical Report, On-line Monitoring of Instrument Channel Performance, TR-104965-R1 NRC SER, Electric Power Research Institute, Final Report, Palo Alto, CA, September 2000.

© 2003 by Béla Lipták

1.10 Redundant and Voting Systems

T. J. WILLIAMS, E. J. SCHAFFER (1982) **T. J. WILLIAMS** (1995) **A. ROHR** (2003)

INTRODUCTION

Reliability in process control computing can be defined as the correct operation of a system up to a time $t = T$, given that it was operating correctly at the starting time $t = 0$.[1] However, correct operation can have many meanings, depending on the requirements previously established for the system. A common attitude today is that single or multiple failures can be accepted as long as the system does not go down or the desired operation is not interrupted or disturbed. Reliability is therefore a goal to be expected of a system and is set by the users.

To obtain a certain measure of reliability, the term *fault-tolerant computing* can be used. It may be defined as "the ability to execute specified algorithms correctly regardless of hardware errors and program errors."[2] Since different computers in different applications have widely different requirements for reliability, availability, recovery time, data protection, and maintainability, an opportunity exists for the use of many different fault-tolerant techniques.[3]

The understanding of fault tolerance can be helped by first understanding faults. A fault can be defined as "the deviation of one or more logic variables in the computer hardware from their design-specified values."[1] A logic value for a digital computer is either a zero or a one. A fault is the appearance of an incorrect value such as a logic gate "stuck on zero" or "stuck on one." The fault causes an "error" if it, in turn, produces an incorrect operation of the previously correctly functioning logic elements. Therefore, the term *fault* is restricted to the actual hardware that fails.

Faults can be classified in several ways. Their most important characteristic is a function of their duration. They can be either permanent (solid or "hard") or transient (intermittent or "soft"). Permanent faults are caused by solid failures of components.[4] They are easier to diagnose but usually require the use of more drastic correction techniques than do transient faults. Transient faults cause 80 to 90% of faults in most systems.[5] Transient faults, or intermittents, can be defined as random failures that prevent the proper operation of a unit for only a short period of time—not long enough to be tested and diagnosed as a permanent failure. Often, transient faults become permanent with further deterioration of the equipment. Then, permanent fault-tolerant techniques must be used for system recovery.

The goal of system reliability or of fault-tolerant computing therefore is to either prevent or be able to recover from faults and continue correct system operation. This also includes immunity to software faults induced into the system. To achieve a high reliability, it is essential that component reliability be as high as possible. "As the complexity of computer systems increase, almost any level of guaranteed reliability of individual elements becomes insufficient to provide a satisfactory probability of successful task completion."[6] Therefore, successful fault-tolerant computers must use a judicious selection of protective redundancy to help meet the reliability requirements. The three redundancy techniques are as follows:

1. Hardware redundancy
2. Software redundancy
3. Time redundancy

These three techniques cover all methods of fault tolerance. *Hardware redundancy* can be defined as any circuitry in the system that is not necessary for normal computer operation should no faults occur. *Software redundancy*, similarly, is additional program instructions present solely to handle faults. Any retrial of instructions is known as *time redundancy.*

Hardware Redundancy

Hardware redundancy can be described as the set of all hardware components that need to be introduced into the system to provide fault tolerance with respect to operational faults.[1] These components would be superfluous should no faults occur, and their removal would not diminish the computing power of the system in the absence of faults.

In achieving hardware fault tolerance, it is clear that one should use the most reliable components available.[7] However, increasing component reliability has only a small impact on increasing system reliability. Therefore, it is "more important to be able to recover from failures than to prevent them."[8] Redundant techniques allow recovery and are thus very important in achieving fault-tolerant systems. The techniques used in achieving hardware redundancy can be divided into two categories: static (or masking) redundancy and dynamic redundancy.

© 2003 by Béla Lipták

Static techniques are effective in handling both transient and permanent failures. Masking is virtually instantaneous and automatic. It can be defined as any computer error correction method that is transparent to the user and often to the software. Redundant components serve to mask the effect of hardware failures of other components.

Many different techniques of static redundancy can be applied. The simplest or lowest level of complexity is by a massive replication of the individual components of the system.[1] For example, four diodes connected as two parallel pairs that are themselves connected in series will not fail if any one diode fails "open" or "short." Logical gates in similar quadded arrangements[9,10] can also guard against single faults, and even some multiple faults, for largely replicated systems.

More sophisticated systems use replication at higher levels of complexity to mask failures. Instead of using a mere massive replication of components configured in fault-tolerant arrangements, identical nonredundant computer sections or modules can be replicated and their outputs voted upon. Examples are triple modular redundancy (TMR) and more massive modular redundancy (NMR), where N can stand for any odd number of modules.

In addition to component replication, coding can be used to mask faults as well as to detect them. With the use of some codes, data that has been garbled (i.e., bits changed due to hardware errors) can sometimes be recovered instantaneously with the use of redundant hardware. Dynamic recovery methods are, however, better able to handle many of these faults.

Higher levels of fault tolerance can be achieved more easily through dynamic redundancy and implemented through the dual actions of fault detection and recovery. This often requires software help in conjunction with hardware redundancy. Many of these methods are extensions of static techniques.

Massive redundancy in components can often be better utilized when controlled dynamically. Redundant modules, or spares, can have a better fault tolerance when they are left unpowered until needed, since they will not degrade while awaiting use. This technique, standby redundancy,[11] often uses dynamic voting techniques to achieve a high degree of fault tolerance. This union of the two methods is referred to as *hybrid redundancy.*[12] Additional hardware is needed for the detection and switching out of faulty modules and the switching in of good spares within the system by this technique.

Error detecting and error correcting codes[13] can be used to dynamically achieve fault tolerance in a computing system. Coding refers to the addition of extra bits to and the rearranging of the bits of a binary word that contains information. The strategy of coding is to add a minimum number of check bits, the additional bits, to the message in such a way that a given degree of error detection or correction is achieved.[4] Error detection and correction is accomplished by comparing the new word, hopefully unchanged after transmission, storage, or processing, with a set of allowable configurations of bits. Discrepancies discovered in this manner signal the existence of a fault, which sometimes be corrected if enough of the original information remains intact.

This means that the original binary word can be reconstructed with some such codes if a set number of bits in the coded word have not changed. Encoding and decoding words with the use of redundant hardware can be very effective in detecting errors. Through hardware or software algorithms, incorrect data can also often be reconstructed. Otherwise, the detected errors can be handled by module replacement and software recovery actions. The actions taken depend on the extent of the fault and of the recovery mechanisms available to the computing system.

Software Redundancy

Software redundancy refers to all additional software installed in a system that would not be needed for a fault-free computer. Software redundancy plays a major role in most fault-tolerant computers. Even computers that recover from failures mainly by hardware means use software to control their recovery and decision-making processes. The level of software used depends on the recovery system design. The recovery design depends on the type of error or malfunction that is expected. Different schemes have been found to be more appropriate for the handling of different errors. Some can be accomplished most efficiently solely by hardware means. Others need only software, but most use a mixture of the two.

For a functional system, i.e., one without hardware design faults, errors can be classified into two varieties: (1) software design errors and (2) hardware malfunctions.

The first category can be corrected mainly by means of software. It is extremely difficult for hardware to be designed to correct for programmers' errors. The software methods, though, are often used to correct hardware faults—especially transient ones. The reduction and correction of software design errors can be accomplished through the techniques outlined below.

Computers may be designed to detect several software errors.[14,15] Examples include the use of illegal instructions (i.e., instructions that do not exist), the use of privileged instructions when the system has not been authorized to process them, and address violations. This latter refers to reading or writing into locations beyond usable memory. These limits can often be set physically on the hardware. Computers capable of detecting these errors allow the programmer to handle the errors by causing interrupts. The interrupts route the program to specific locations in memory. The programmer, knowing these locations, can then add his own code to branch to his specific subroutines, which can handle each error in a specified manner.

Software recovery from software errors can be accomplished via several methods. As mentioned before, parallel programming, in which alternative methods are used to determine a correct solution, can be used when an incorrect solution can be identified. Some less sophisticated systems print out diagnostics so that the user can correct the program off line

© 2003 by Béla Lipták

from the machine. This should only be a last resort for a fault-tolerant machine. Nevertheless, a computer should always keep a log of all errors incurred, memory size permitting.

Preventive measures used with software methods refer mainly to the use of redundant storage. Hardware failures often result in a garbling or a loss of data or instructions that are read from memory. If hardware techniques such as coding cannot recover the correct bit pattern, those words will become permanently lost. Therefore, it is important to at least duplicate all necessary program and data storage so that it can be retrieved if one copy is destroyed. In addition, special measures should be taken so that critical programs such as error recovery programs are placed in nonvolatile storage, i.e., read-only memory. Critical data as well should be placed in nondestructive readout memories. An example of such a memory is a plated-wire memory.

The second task of the software in fault tolerance is to detect and diagnose errors. Software error-detection techniques for software errors often can be used to detect transient hardware faults. This is important, since "a relatively large number of malfunctions are intermittent in nature rather than solid failures."[9] Time-redundant processes, i.e., repeated trials, shall be used for their recovery.

Software detection techniques do not localize the sources of the errors. Therefore, diagnostic test programs are frequently implemented to locate the module or modules responsible. These programs often test the extent of the faults at the time of failure or perform periodic tests to determine malfunctions before they manifest themselves as errors during program execution. Almost every computer system uses some form of diagnostic routines to locate faults. In a fault-tolerant system, the system itself initiates these tests and interprets their results, as opposed to the outside insertion of test programs by operators in other systems.

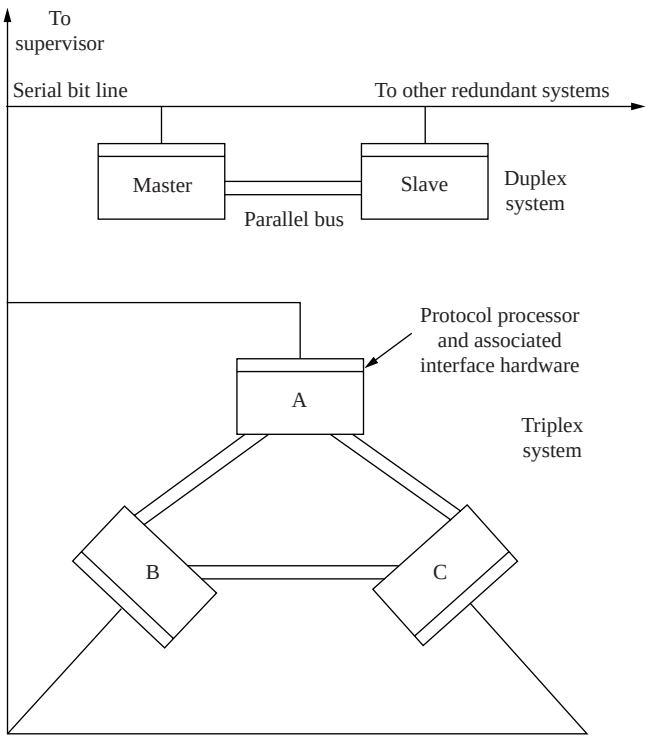

FIG. 1.10a
Comparison of duplex and triplex redundancy systems.

Fault-Tolerant Computer System Design

The design of a fault-tolerant industrial computer system should be different from that of a similar system for a spaceborne computer system. Maintenance is available in an industrial environment to replace any modules that may have failed. In addition, the system may be much larger, and a hierarchy of many computers of different sizes may be necessary to handle the various operations.[16] Therefore, a fault-tolerant communication network may be required as well.

Future advancements must also be considered when studying the design of fault-tolerant systems. Throw-away processors on a chip are no longer a myth, and the manufacture of equivalent inexpensive mass memory is probably already here as well.[6] Valid future designs must incorporate provisions for these advances and allow for larger replacement modules for quicker and simpler fault location and maintenance.

The ways in which faults manifest themselves have not changed. They may be summarized as the following:[17]

1. Intramodule data errors
2. Intermodule data transfer errors
3. Address errors
4. Control signal errors
5. Power failure
6. Timing failure
7. Reconfiguration faults

The two main designs considered here are that of a duplex system with two identical computers operating in parallel and that of a triplex system (see Figure 1.10a). The triplex system has three computers operating synchronously. In addition to those error detecting and correcting capabilities already built into the computers, fault-tolerant features will be present in software for both systems. The duplex system will feature a comparison of data for fault detection with rollback and recovery to handle transient errors. The triplex system will incorporate a software voting scheme with memory reload to recover from transient failures. This removes the overhead of rollback. Each duplicated system of computers will communicate internally via a parallel data bus that will allow high-speed communication, plus a parallel control bus that will initiate interrupts to handle any faults within the system. All computer elements will communicate with higher level systems via a full-duplex synchronous serial bit bus, a bus that will permit simultaneous message transfer in both directions, through the protocol microprocessor. With these components, a fully reliable system should be realized.

© 2003 by Béla Lipták

FIELD INSTRUMENT REDUNDANCY AND VOTING

The above concepts apply not only to process computers but also to basic process control systems (BPCSs) and safety instrumented systems (SISs), where they also improve performance, availability, and reliability. In the case of field instruments and final control elements, they mainly guarantee continuity of operation and increase uptime, whereas, in SIS systems, they minimize nuisance or spurious interventions and alarms.

The techniques used in BPCS and SIS systems are similar and have initially been developed for the inherently more demanding SIS applications. For SIS systems, the need of international regulations has been recognized (ANSI/ISA-84.01-1996,[18] IEC 61508-1998/2000,[19] and IEC 61511,[20] in draft version) while, for non-safety related control loops, this is left to good engineering practice. Therefore, the discussion of redundancy and voting techniques, as applied to the field instruments of BPCS systems, will be based on the SIS standards as guidelines. The BPCS goal is to improve control loop availability such that the trigger point for the intervention of the associated SIS system is unlikely ever to be reached. Thereby, redundancy in BPCS also improves safety. This is because increased availability reduces the number of shutdowns, which tend to shorten the life of the plant due to the resulting thermal and other stresses.

One of the main objectives of measurement and control specialists is to improve the availability and accuracy of measurements. To achieve that goal and to minimize systematic uncertainty while increasing reliability, correct specification, instrument selection, and installation are essential.

Assuming that the transmitters have been properly specified, selected, and installed, one can further improve total performance by measuring the same variable with more than one sensor. Depending on the importance of the measurement, redundancy can involve two or more detectors measuring the same process variable. When three or more sensors are used, one can select the "majority view" by voting. With this approach, one would select m measurements out of the total n number of signals so, that $m > n/2$. In industrial practice, n is normally 3 so that m is 2.

The redundant and voting techniques have been standardized in various SIS-related documents, including ANSI/ISA-84.01, IEC 61508, and IEC 61511. The SIS systems usually evaluate on–off signals or threshold limits of analog signals whereas, in process control, redundancy and voting is obtained by the evaluation of multiple analog signals. The main difference between BPCS and SIS systems is that SIS is a "dormant" system, but continuously self-checking, and it is called upon to operate only in an emergency. In addition, the SIS is fail safe; i.e., if it fails, it brings the plant to a safe status. SIS malfunctioning is inferred from diagnostic programs and not from plant conditions, because the plant cannot be shut down or brought to unsafe conditions just to test the SIS system. All international regulations follow this approach.

In contrast to SIS systems, the BPCS control loops are always active and, if they malfunction, they actuate alarms, which the operator immediately notices. The consequence is that the SIS-based definitions developed in IEC 61508, to some extent, can also be used as guidelines for control loops that require high uptime and whose unavailability would, within a short time, drive the plant to conditions requiring plant shutdown.

IEC 61508 Part 6 gives the definition of the various architectures most commonly used in the safety instrumented systems. They apply for use with one, two, or three elements and their various combinations. The elements that are used in a single or multiple configuration can be either transmitters or final control elements, but they are mainly for transmitters, and only very rarely for control valves, because of the substantial difference in costs. The control system, such as a DCS system, is usually configured with multiple controllers and redundant other system components (e.g., system bus, I/O bus, HMI). IEC 61508 considers and gives definitions to the configurations described below.

Single-Transmitter Configuration (Figure 1.10b)

1oo1 A single transmitter is used, as in many control loops. These loops consist of an analog transmitter and an analog controller (pneumatic or electronic). This configuration is the most prone to overall malfunctioning. Errors and failures can be caused by a sticking control valve or transmitter or by an out of range signal (up or down scale). In these loops,

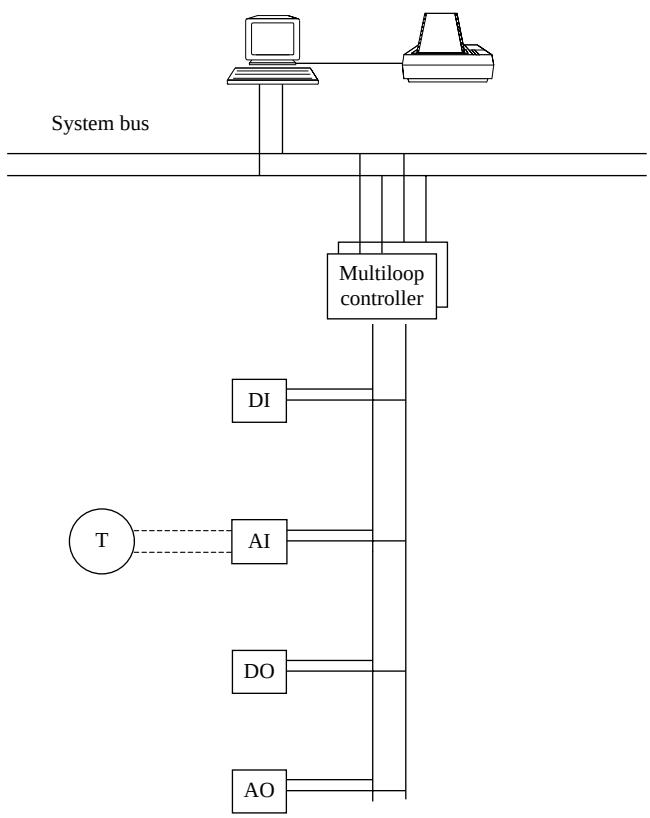

FIG. 1.10b
1oo1/1oo1D transmitter input.

© 2003 by Béla Lipták

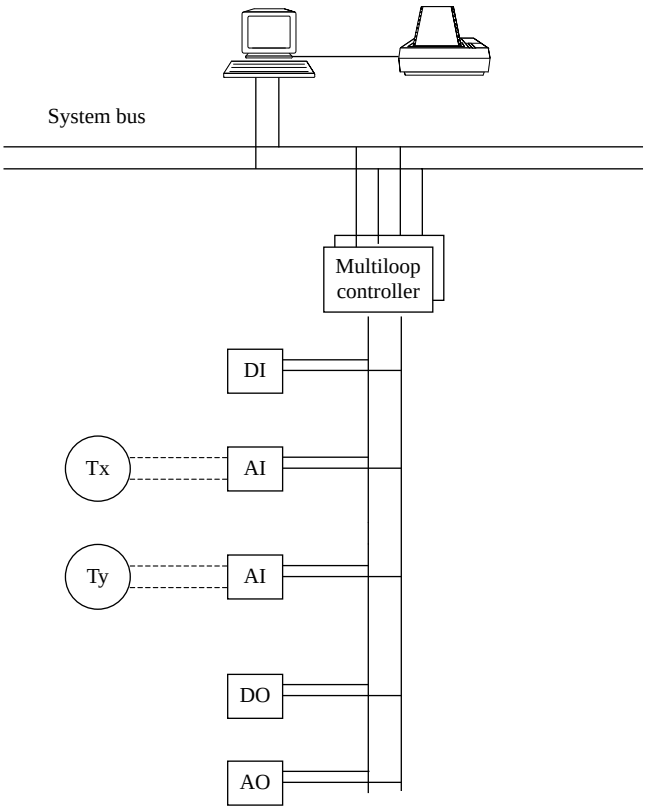

FIG. 1.10c
2oo2D transmitter input.

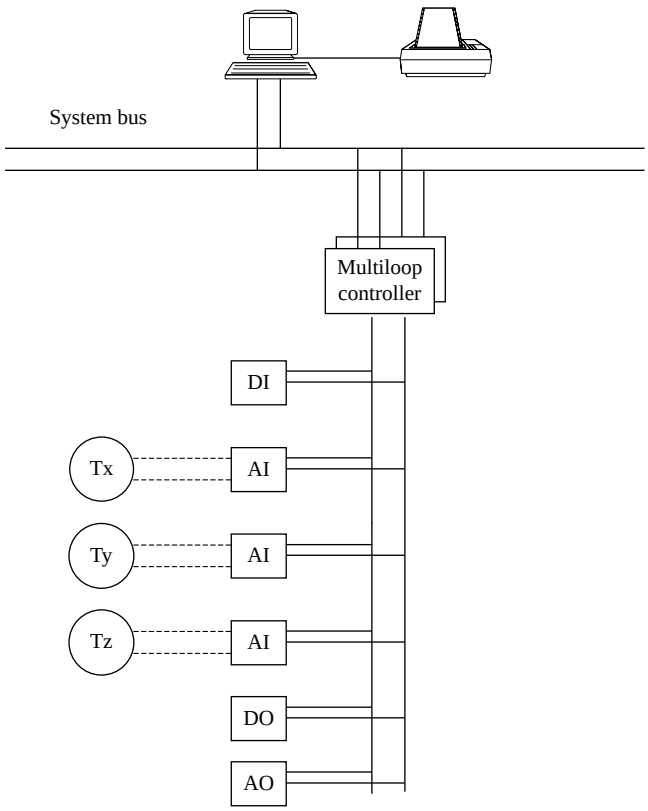

FIG. 1.10d
2oo3 transmitter input.

diagnostic protection is very limited. Remember, in the past, the burn-out feature of thermocouples was almost the only diagnostic function implemented in the mV/psi converters or mV/mA transducers.

1oo1D A single transmitter is used, with diagnostic coverage integral to the transmitter (e.g., self-validating transmitters[21,22]) and/or external in the control system.

Two-Transmitter Configuration (Figure 1.10c)

1oo2 Two transmitters in parallel are used; the failure of one determines the loss of control. In principle, this definition cannot be borrowed from IEC 61508.

1oo2D Two transmitters in parallel are used, with diagnostic coverage mainly residing in the control system. The type of diagnostic functions will be covered afterward.

2oo2 Two transmitters in parallel are used. The loss of control should be determined by the failure of both. In principle, this definition cannot be borrowed from IEC 61508.

Three-Transmitter Configuration (Figure 1.10d)

2oo3 Three transmitters in parallel are used. The concurrent value indicated by two of them is assumed as correct and representative of the process conditions. Concurrency means that they differ by no more than X%.

Diagnostic Coverage

The diagnostic coverage in the BPCS is much less than in the SIS, for reasons outlined previously, and is provided mainly in and by the DCS, which has the capability of comparing the signals received from the transmitters and determining whether they are within the imposed limits so as to consider them to be concurrent. If an inconsistency is detected, the DCS is capable of signaling the abnormal situation and to maintain control, at least in some instances, without operator intervention.

1oo1D The diagnostic coverage can be partly integral to the transmitter and/or external in the control system (rate of change alarms, overrange alarms detecting the individual fault). In a broader sense, in addition, the material balance (data reconciliation) performed in the DCS can contribute to detect a failure in the flow transmitters or their unreliable reading.

1oo2D The signal from each transmitter is checked to verify if it is within the validity limits (i.e., 4-20 mA). If a transmitter is outside the validity range, its signal

© 2003 by Béla Lipták

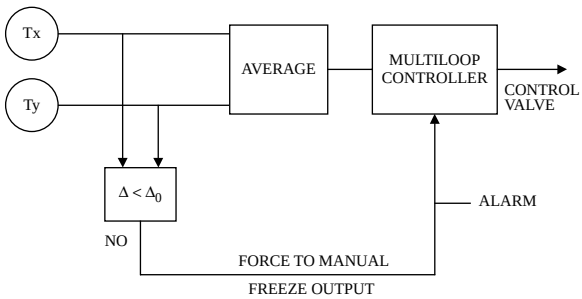

FIG. 1.10e
1oo2D signal conditioning.

is discarded, the controller receives the value from the other transmitter and an alarm is issued to warn the operator about the malfunctioning. If both transmitters are within validity limits, the difference among their signals is calculated. In case the difference is within a preset value (in the range of few percent), the average value is assumed as good and used for the control function (Figure 1.10e).

The acceptable discrepancy between the two transmitters depends on the measurement conditions; for instance, the acceptable discrepancy in the level measurement in a steam drum is larger than in the case of a pressure measurement. As an indication, for two level transmitters installed at different ends of the steam drum, 5% discrepancy is acceptable. However, for pressure measurement, 2% should not be exceeded. Normally, in the process industry, it is not necessary to select a very small discrepancy (such as twice the declared accuracy) between the transmitted values, because the difference could be the result of many causes other than a transmitter failure or the need for recalibration (the main reason could be the installation). Sometimes, a common percentage discrepancy value is chosen and used for all measures, because experience has shown that it is unlikely that a transmitter fails to a value close to the correct one.

When the discrepancy is beyond the preset value, but both signals are within validity limits, it is not possible to determine which one is invalid. In this case, an alarm is produced, and the controller is automatically forced to manual, with output frozen at the last valid value. The operator then has the responsibility to discard one of the two transmitters and use the other as the input to the controller, then switch to auto again.

2oo3 The signal from each transmitter is checked to verify whether it is within the validity limits (i.e., 4 to 20 mA). If a transmitter is outside the validity range, its signal is discarded as invalid, and the remaining two are used as if they were in 1oo2D configuration. If no invalid signal is detected, then the discrepancy between the values is calculated. Supposing the three signals are X, Y, and Z, the differences X – Y, Y – Z, and Z – X are calculated. If each of them is within the preset limits, the median value is taken as good and used as process variable by the controller. If one difference exceeds the preset limit, an alarm is issued to the operator, and the median value is used as process variable for the controller. If two differences exceed the preset limit, the value of the transmitter involved in both the excessive differences is discarded, an alarm is issued to the operator, and the average value of the remaining two is used as process value. If all three differences exceed the preset limit, this means that at least two transmitters are not reliable. In this case, the controller is automatically forced to manual, with output equal to last valid value (Figure 1.10f).

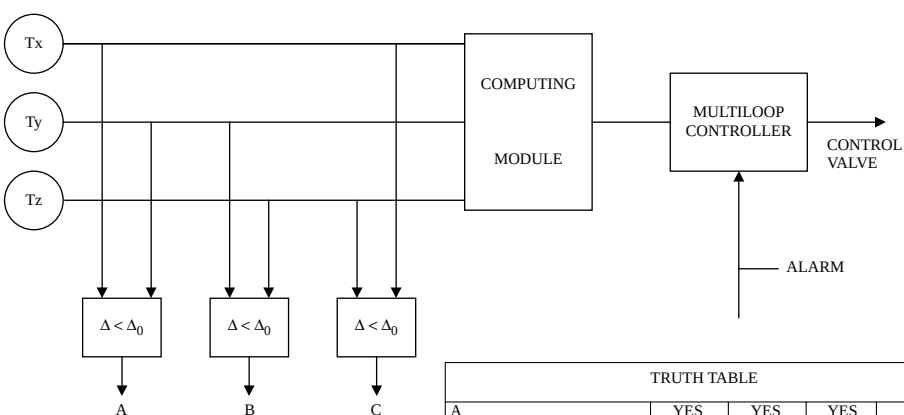

TRUTH TABLE				
A	YES	YES	YES	NO
B	YES	YES	NO	NO
C	YES	NO	NO	NO
Computing Module	Median	Median	Average	NONE
Alarm	NO	YES	YES	YES
Discard	NONE	NONE	Tz	Tx, Ty, Tz
Force contr. output to man.	NO	NO	NO	YES

FIG. 1.10f
2oo3 signal conditioning.

© 2003 by Béla Lipták

The operator has the responsibility to select one of the three transmitters as the good one, use it as input to the controller, and switch to auto again. There are some possible variations in the algorithms used for the selection of the valid signals and the discarding of the unreliable ones, and they depend on the available control blocks of the involved DCS.

Engineering Redundant Measures

When redundant measures are performed, attention shall be given to avoid common-mode failures. A possible common-mode cause of inaccuracy in flow measurement is the primary flow element, which can be erroneously calculated, wrongly installed, or show wear after extended operation. This situation is not easily corrected but can be detected by material balance and/or maintenance (i.e., by checking the size of the orifice or throat and the sharpness of the orifice edge).

Starting from the tapping point on the process, the most usual common-mode failures are examined. Two or three pressure transmitters connected to the same valved branch on a pipe or vessel are prone to common-mode failure, because the closing or clogging of the root valve puts all transmitters out of service. Such an installation is therefore to be avoided.

The same multicore cable containing the 4 to 20 mA signals of redundant transmitters is a possible cause of common-mode failure because, if it is cut, all the signals are lost at the same time. Therefore, the signals should be contained in different cables, and the cables themselves should be routed on different cable racks.

The same input card receiving the signals from redundant transmitters is a possible cause of common-mode failure because, even if only a single channel (even different from the ones under consideration) of the input card fails and the card is then replaced, all the transmitter inputs are lost simultaneously. It is appropriate to connect the redundant transmitters to different input cards.

If the multiloop controller in the DCS is not redundant (or fault tolerant), the input cards connected to the redundant transmitters should belong to different multiloop controllers to avoid common-mode faults. It is, however, highly preferable to use redundant multiloop controllers (rather than two independent nonredundant multiloop controllers) because of the increased traffic in the system bus and of a loop failure consequent to the system bus failure.

Because all the transmitters are powered from the DCS, redundant power supplies to the DCS modules should be provided, coming from different sources.

For an exhaustive evaluation of failure modes, Tables B.5.1 and B.5.2 of ANSI/ISA-84.01-1996 provide a useful guideline, even though they cover the SIS.

These simple examples clearly indicate that it is not sufficient to duplicate or triplicate the transmitters and that, to obtain the best possible results, the complete engineering of the system shall be carried out correctly. However, it is necessary to evaluate properly to what extent it is necessary to avoid common-mode failures as a factor of the criticality of the application. If, for instance, all the cables are installed on the same tray, distributing the redundant transmitters in different cables does not improve the situation; it would be unusual for only one cable to break while the others remain in operation.

Complex Control Loops

In the power generation industry, two or three transmitters in redundant or voting configuration are commonly used for all control loops. As the boiler control requires complex loops, a question to be answered is to what extent can it be justified that the transmitters be duplicated or triplicated.

Consider the steam drum level control, and suppose that duplicated measurements are the contractual requirement. Of course, the level transmitters, the relevant steam and water flow transmitters, are duplicated to allow for a fully redundant three-element control. What about the pressure transmitter used to compensate the level measurement for density? If the boiler is operating at constant pressure, a single transmitter should be sufficient. If it fails, the last valid value could be frozen and used, obviously sending an alarm to the operator. If the boiler is operating in sliding pressure, then it must also duplicate the pressure transmitter.

Consider the steam flow compensation for pressure and temperature. If the flow transmitter is duplicated, the pressure and temperature transmitters do not always require duplication; if these variables are allowed to vary only slightly and the measure is not used for custody transfer, it should be sufficient to freeze the last valid value for compensation, with a warning to the operator. But, again, if the boiler is operating in sliding pressure mode or could possibly have a variable steam temperature, then the transmitters should be duplicated.

Notwithstanding these considerations, if a plant is supplied as a turnkey operation, the specifications uniformly will call for redundancy without closely examining the real need for duplication or triplication of the transmitters.

Final Control Elements

In very rare instances, the final control elements can be duplicated, as when the erosive/corrosive or sticking characteristics of the fluid could cause unacceptable downtime. It should be noted that the need for duplicating the valves is more stringent if the valves are more sophisticated and therefore more expensive, so justifying this duplication is often difficult. The price of a critical valve can be 10 to 20 times the price of a transmitter (and on occasion, even more).

If duplicated, the control valves are not operating in parallel, but one is in "cold standby," so the analogy with redundant transmitters is not accurate.

The possible configurations of the final control elements are as listed below:

© 2003 by Béla Lipták

1oo1 A single control valve is used, as in all typical control loops. This configuration covers the majority of the applications, being the simplest; however, a valve malfunction (e.g., sticking) could be detected, with some time delay, as a drift in process variables caused by the incorrect positioning of the trim.

1oo1D A single valve is used, with some diagnostic coverage integral with the electropneumatic positioner. This is a check of the valve's actual position against the required one and verification that the dynamic response of the valve has not changed over time. This function is made possible by smart positioners that generate a position signal that is transferred to the control system as a feedback on valve behavior. The DCS compares the requested position with the actual one and gives an alarm if the discrepancy becomes excessive or does not tend to zero in a reasonable time. The value of the discrepancy being alarmed is somewhat higher than between two transmitters and is considered acceptable if it is about 5 to 7%, provided that this offset tends to zero in time.

For on–off control valves, the diagnostic function can occasionally command the valve to move from the current condition shortly and slightly, performing only a partial travel, to determine whether the trim is stuck and to prevent it from sticking. The result is monitored, and any malfunctioning sets off an alarm. This partial movement, however, shall be compatible with the process characteristics.

1oo2D Two valves in cold standby are used, with diagnostic coverage mainly residing in the DCS. The diagnostic helps to determine if and when the switching from the main valve to the spare one must be performed. To avoid encountering a faulty spare valve, it is necessary to exercise it regularly so as to achieve an awareness of and confidence about its operability.

If the problem is associated with erosion or corrosion, the Cv of the valve increases at low lift. However, if the flow remains within the operational values, it is not easy to detect a problem. Only when the valve is almost closed and the passing flow creates process upsets can the erosion/corrosion situation be detected, unless a correlation between flow and valve opening can be established and logged over time.

An example of a different application that always involves redundancy of the final control element is stroke control of the dosing pumps. In boiler applications, the chemical dosing pumps are normally redundant and in cold standby because of the criticality of the application, while the accuracy is not a major requirement (in some cases, the stroke adjustment is manual). If the stroke is controlled from the DCS, it is important that both pumps be controlled, but control redundancy is not essential. The solution can be a simple analog output feeding, in series, both of the I/P converters whose pneumatic output adjusts the pump stroke. The output to the stopped pump has no effect. If one I/P converter fails in short circuit, the signal through the other keeps flowing correctly. It is sufficient that the pump in operation is the one controlled by the healthy I/P converter, and so the plant will have no problems. To prevent the stroke from going to zero if one I/P converter fails open, it is sufficient to install a zener diode on the terminals of each I/P converter to guarantee the signal flow continuity (Figure 1.10g). In this way, if all the equipment is healthy, the 4 to 20 mA signal does not flow through the zener diodes. However, if a converter fails open, the current flows through the parallel diode without any deleterious effect.

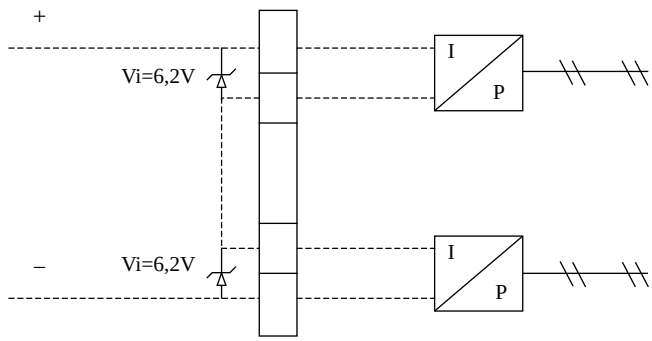

FIG. 1.10g
Single output to two I/P converters.

Availability Considerations

Availability can be defined as "the probability that a system is operating at time *t*."[23] For control loops, the availability is the major parameter in that high availability means continuity of operation. If a single component (e.g., a transmitter) is used, its failure means that the control loop is no longer operable in an automatic mode until the component has been repaired or replaced. This can require several hours and could involve a plant shutdown, which requires additional time for restarting and consequent loss of production.

By duplicating the transmitter, the failure probability is doubled, but the measure becomes almost immediately available (in terms of minutes), and the probability that the second transmitter will fail during the few hours needed to replace/repair the failed one is really close to zero. With the technique explained above, the duration of unavailability corresponds to the time needed for the operator to select the transmitter he trusts most and assign it as the process variable to the controller.

By triplicating the transmitters, the failure probability is tripled, but even the short period of unavailability of the measure is eliminated. The control system is able to automatically calculate, from the set of available measurements, the one that best represents the process.

© 2003 by Béla Lipták

Of course, these qualitative statements are true only if the maintenance activity is immediate and the faulty equipment is repaired/substituted within the shift or the day. The triple transmitters are less sensitive to the faulty operation of one (or even two) units, because it is possible for the operator to select the remaining healthy transmitter and use it as the process variable of the control loop.

These qualitative considerations can be studied quantitatively with statistical methods based on the fact that failures are random variables. Further information is available in the specialized literature.[23,24]

References

1. Avizienis, A., Architecture of fault-tolerant computer systems, *Dig. 1975 Int. Symp. Fault-Tolerant Computing*, Paris, June 1975, IEEE Computer Society, New York, 3–16.
2. Avizienis, A., Fault-tolerant computing—an overview, *Computer*, 4(1), 5–8, 1971.
3. Wensley, J. H., Levitt, K. N., and Neumann, P. G., A comparative study of architectures for fault-tolerance, *Dig. 1974 Int. Symp. Fault-Tolerant Computing*, Urbana, IL, IEEE Computer Society, New York, 4-16 to 4-21, 1974.
4. Schaeffer, E. J. and Williams, T. J., An Analysis of Fault Detection, Correction and Prevention in Industrial Computer Systems, Report No. 106, Purdue Laboratory for Applied Industrial Control, Purdue University, West Lafayette, IN, 1977.
5. Tasar, O. and Tasar, V., A study of intermittent faults in digital computers, *AFIPS Conf. Proc.*, Vol. 46, AFIPS Press, Montvale, NJ, 807–811, 1977.
6. Short, R. A., The attainment of reliable digital systems through the use of redundancy—a survey, *IEEE Computer Group News*, 2(2), 2–17, 1968.
7. Lyons, R. E. and Vanderkulk, W., The use of triple modular redundancy to improve computer reliability, *IBM J. Res. Dev.*, 6(2), 200–209, 1962.
8. Wulf, W. A., Reliable hardware/software architecture, *IEEE Trans. Software Eng.*, SE-1 (2), 233–240, 1975.
9. Higgins, A. N., Error recovery through programming, *AFIPS Conf. Proc.*, Vol. 33, AFIPS Press, Montvale, NJ, 39–43, 1986.
10. Tryon, J. G., *Quadded Logic, Redundancy Techniques for Computing Systems*, Spartan Press, Washington, DC, 1962, 205–228.
11. Losq, J., Influence of fault-detection and switching mechanisms on reliability of stand-by systems, *Dig. 1975 Int. Symp. Fault-Tolerant Computing*, Paris, France, June 1975, IEEE Computer Society, New York, 81–86.
12. Mathur, F. P. and Avizienis, A., Reliability analysis and architecture of a hybrid-redundant digital system: generalized triple modular redundancy with self-repair, *AFIPS Conf. Proc.*, Vol. 36, AFIPS Press, Montvale, NJ, 375–383, 1970.
13. Szygenda, S. A. and Flynn, M. I., Coding techniques for failure recovery in a distributive modular memory organization, *AFIPS Conf. Proc.*, Vol. 38, AFIPS Press, Montvale, NJ, 459–466, 1971.
14. Texas Instruments, Inc., Model 990/10 Computer System Hardware Reference Manual, Manual Number 945417–9701, Austin, TX, August 1977.
15. Digital Equipment Corp., Specification for DDCMP Digital Data Communications Message Protocol, 3rd ed., Maynard, MA, 1974.
16. Brosius, J. P. Jr. and Russell, B. J., Fault-tolerant plated wire memory for long duration space missions, *Dig. 1973 Int. Symp. Fault-Tolerant Computing*, Palo Alto, CA, June 1973, IEEE Computer Society, New York, 33–38.
17. Stiffler, J. J., Architectural design for near-100% fault coverage, in *Dig. 1976 Int. Symp. Fault-Tolerant Computing*, Pittsburgh, PA, June 1976, IEEE Computer Society, New York, 134–137.
18. ANSI/ISA-84.01-1996: *Application of Safety Instrumented Systems for the Process Industry*, ISA, Research Triangle Park, NC, 1997.
19. IEC 61508: *Functional Safety of Electrical/Electronic/Programmable Electronic Safety-Related Systems*, International Electrotechnical Commission, Geneva, 1998/2000.
20. IEC 61511: *Functional Safety: Safety Instrumented Systems for the Process Industry Sector (draft)*, International Electrotechnical Commission, Geneva.
21. Clarke, D. W., Validation of sensors, actuators and processes, *Proc. Interkama ISA Tech. Conf.*, Düsseldorf, Germany, 1999.
22. Manus H., Self-validating (SEVA) sensors—towards standards and products, *Proc. 29th BIAS Int. Conf.*, Milan, Italy, 2000.
23. Goble, W. M., *Control Systems Safety Evaluation & Reliability*, ISA, Research Triangle Park, NC, 1998.
24. Gruhn, P. and Cheddie, H. L., *Safety Shutdown Systems: Design, Analysis and Justification*, ISA, Research Triangle Park, NC, 1998.

Bibliography

Allen, J. R. and Yau, S. S., Real-time fault detection for small computers, *AFIPS Conf. Proc.*, Vol. 40, AFIPS Press, Montvale, NJ, 119–127, 1972.

Anderson, D. A. and Metze, G., Design of totally self-checking check circuits for m-out-of-n codes, *IEEE Trans. Comput.*, C-22, 263–269, 1973.

Anderson, T. and Lee, P., *Fault Tolerance, Principles and Practice*, 2nd ed., Springer Verlag, Vienna, 1990.

Avizienis, A., Approaches to computer reliability—then and now, *AFIPS Conf. Proc.*, Vol. 45, AFIPS Press, Montvale, NJ, 401–411, 1976.

Avizienis, A., Arithmetic error codes: cost and effectiveness studies for application in digital system design, *IEEE Trans. Comput.*, C-20 (11), 1322–1331, 1971.

Avizienis, A., Filley, G. C., Mathur, F. P., Rennels, D. A., Rohr, J. A., and Rubin, D. K., The STAR (self-testing-and-repairing) computer: an investigation of the theory and practice of fault-tolerant computer design, *IEEE Trans. Comput.*, C-20 (11), 1312–1321, 1971.

Bartow, N. and McGuire, R., System/360 model 85 micro-diagnostics, *AFIPS Conf. Proc.*, Vol. 36, AFIPS Press, Montvale, NJ, 191–197, 1970.

Bashkow, T. R., Friets, J., and Karson, A., A programming system for detection and diagnosis of machine malfunctions, *IEEE Trans. Comput.*, EC-12, 10–17, 1963.

Bennetts, R. G., *Design of Testable Logic Circuits*, Addison-Wesley, Reading, MA, 1984.

Bequaert, F. C., Quip—A system for automatic program generation, *AFIPS Conf. Proc.*, Vol. 33, Part I, AFIPS Press, Montvale, NJ, 611–616, 1968.

Borgerson, B. R., Dynamic confirmation of system integrity, *AFIPS Conf. Proc.*, Vol. 41, Part I, AFIPS Press, Montvale, NJ, 89–96, 1972.

Bouricius, W. G., Carter, W. C., Jessup, D. C., Schneider, P. R., and Wadia, A. B., Reliability modeling for fault-tolerant computers, *IEEE Trans. Comput.*, C-20 (11), 1306–1311, 1971.

Brosius, D. B. and Jurison, J., Design of a voter-comparator-switch for redundant computer modules, *Dig. 1973 Int. Symp. Fault-Tolerant Computing*, Palo Alto, CA, IEEE Computer Society, New York, 113–117, 1973.

Buckley, J. E., IBM protocols part 2: SDLC, *Computer Des.*, 14(2), 14–16, 1975.

Burchby, D. D., Kern, L. W., and Sturm, W. A., Specification of the fault-tolerant spaceborne computer (FTSC), *Dig. 1976 Int. Symp. Fault-Tolerant Computing*, Pittsburgh, PA, IEEE Computer Society, New York, 129–133, 1976.

Carter, W. C., Jessup, D. C., Bwadia, A. B., Schneider, P. R., and Bouricius, W. G., Logic design for dynamic and interactive recovery, *IEEE Trans. Comput.*, C-20 (11), 1300–1305, 1971.

© 2003 by Béla Lipták

Carter, W. C. and McCarthy, C. E., Implementation of an experimental fault-tolerant memory system, *IEEE Trans. Comput.*, C-25 (6), 557–568, 1976.

Chandy, K. M. and Ramamoorthy, C. V., Rollback and Recovery Strategies, *IEEE Trans. Comput.*, C-21 (6), 546–556, 1972.

Chandy, K. M., Ramamoorthy, C. V., and Coway, A., A framework for hardware-software trade-offs in the design of fault-tolerant computers, *AFIPS Conf. Proc.*, Vol. 41, Part 2, AFIPS Press, Montvale, NJ, 53–56, 1972.

Conn, R. B., Alexandridis, N. A., and Avizienis, A., Design of a fault-tolerant, modular computer with dynamic redundancy, *AFIPS Conf. Proc.*, Vol. 41, Part 2, AFIPS Press, Montvale, NJ, 1057–1067, 1972.

Daly, T. E., Tsou, H. S. E., Lewis, J. L., and Hollowich, M. E., The design and verification of a synchronous executive for a fault-tolerant system, *Dig. 1973 Int. Symp. Fault-Tolerant Computing*, Palo Alto, CA, IEEE Computer Society, New York, 3–9, 1973.

DeAnglis, D. and Lauro, J. A., Software recovery in the fault-tolerant spaceborne computer, *Dig. 1976 Int. Symp. Fault-Tolerant Computing*, Pittsburgh, PA, IEEE Computer Society, New York, 143–147, 1976.

Elliot, B. H. and Williams, T. J., Proposal for a Hierarchical Computer Control System, Systems Engineering of Hierarchy Computer Control Systems for Large Steel Manufacturing Complexes, Report No. 84, Vol. 1, Chap. 1-4, Purdue Laboratory for Applied Industrial Control, Purdue University, West Lafayette, IN, August 1976, 4-71 to 4-119.

Elmondorf, W. R., Fault-tolerant programming, *Dig. 1972 Int. Symp. Fault-Tolerance Computing*, Newton, MA, IEEE Computer Society, New York, 79–83, 1972.

Hamming, R. W., Error detecting and error correcting codes, *Bell System Technol. J.*, 29(2), 147–160, 1950.

Hayes, J. P., Checksum test methods, *Dig. 1976 Int. Symp. Fault-Tolerant Computing*, Pittsburgh, PA, IEEE Computer Society, New York, 114–120, 1976.

Himmelblau, D. M., *Fault Detection and Diagnosis in Chemical and Petrochemical Process*, Elsevier Scientific, New York, 1978.

Hopkins, A. L. Jr. and Smith, T. B. III, The architectural elements of a symmetric fault-tolerant multiprocessor, *Dig. 1974 Int. Symp. Fault-Tolerant Computing*, Urbana, IL, IEEE Computer Society, New York, 4-2 to 4-6, 1974.

Horning, J. J., Lauer, H. C., Melliar-Smith, P. M., and Randell, B., *A Program Structure for Error Detection and Recovery*, in Lecture Notes in Computer Science, G. Goos and J. Hartmanis, Eds., Vol. 16, Springer-Verlag, Berlin, 171–187, 1974.

IBM Systems Development Division, IBM Synchronous Data Link Control General Information, IBM Manual GA 27-3093-0, IBM Systems Development Division, Research Triangle Park, NC, 1974.

Jensen, P. A., Quadded nor logic, *IEEE Trans. Reliability*, Vol. R-12, 22–31, 1963.

Kim, K. H. and Ramamoorthy, C. V., Failure-tolerant parallel programming and its supporting system architecture, *AFIPS Conf. Proc.*, Vol. 45, AFIPS Press, Montvale, NJ, 413–423, 1976.

King, J. C., Proving programs to be correct, *IEEE Trans. Comput.*, C-20 (11), 1331–1336, 1971.

Kompass, E. J. and Williams, T. J., Eds., Total control systems availability, *Proc. 15th Annu. Advanced Control Conf.*, Purdue University, West Lafayette, IN, September 11–13, 1989.

Kopetz, H., Fault tolerance in real-time systems, *Proc. 11th IFAC World Congress*, Tallinn, Estonia, Vol. 7, 111–118, 1990.

Losq, J., A highly efficient redundancy scheme: self-purging redundancy, *IEEE Trans. Comput.*, C-25 (6), 569–578, 1976.

Mathur, F. P. and deSousa, P. T., GMR: general modular redundancy, *Dig. 1974 Int. Symp. Fault-Tolerant Computing*, Urbana, IL, IEEE Computer Society, New York, 2-20 to 2-25, 1974.

Mills, H. D., Structured programming in large systems, in *Debugging Techniques in Large Systems*, R. Rustin, Ed., Prentice Hall, Englewood Cliffs, NJ, 44–55, 1971.

Mine, H. and Koga, Y., Basic properties and construction method for fail-safe logical systems, *IEEE Trans. Electronic Comput.*, EC-16 (3), 282–289, 1967.

O'Brien, F. J., Rollback point insertion, *Dig. 1976 Int. Symp. Fault-Tolerant Computing*, Pittsburgh, PA, IEEE Computer Society, New York, 138–142, 1976.

Patel, A. M. and Hsiao, M. Y., An adaptive error correction scheme for computer memory system, *AFIPS Conf. Proc.*, Vol. 41, Part 1, AFIPS Press, Montvale, NJ, 83–85, 1972.

Peterson, W. W. and Brown, D. T., Cyclic codes for error detection, *Proc. IRE*, 22(1), 228–235, 1961.

Peterson, W. W. and Weldon, E. J. Jr., *Error Correcting Codes*, MIT Press, Cambridge, MA, 1972.

Pradhan, D. K., *Fault-Tolerant Computing—Theory and Techniques*, Vols. I and II, Prentice Hall, Englewood Cliffs, NJ, 1986.

Randell, B., System Structure for Software Fault-Tolerance, *IEEE Trans. Comput.*, SE-1 (2), 220–232, 1975.

Rennels, D. A. and Avizienis, A., RMS: a reliability modeling system for self-repairing computers, *Dig. 1973 Int. Symp. Fault-Tolerant Computing*, Palo Alto, CA, IEEE Computer Society, New York, 131–135, 1973.

Rohr, J. A., STAREX: self-repair routines: software recovery in the JPL-STAR computer, *Dig. 1973 Int. Symp. Fault-Tolerant Computing*, Palo Alto, CA, IEEE Computer Society, New York, 11–16, 1973.

Sellers, F. F. Jr., Hsiao, M. Y., and Bearnson, L. W., *Error Detection Logic for Digital Computers*, McGraw-Hill, New York, 1968.

Shepherd, M. Jr., Distributed Computing Power: Opportunities and Challenges, 1977 National Computer Conference Address, Dallas, TX, 1977.

Texas Instruments, Inc., 990 Computer Family Systems Handbook, Manual No. 945250-9701, Texas Instruments, Inc., Austin, TX, 1976.

Wachter, W. J., System malfunction detection and correction, *Dig. 1975 Int. Symp. Fault-Tolerant Computing*, Paris, France, IEEE Computer Society, New York, 196–201, 1975.

Wakerly, J., Error Detecting Codes, Self-Checking Circuits and Applications, North Holland, New York, 1978.

Wensley, J. H., SIFT—software implemented fault-tolerance, *AFIPS Conf. Proc.*, Vol. 41, Part 1, AFIPS Press, Montvale, NJ, 243–253, 1972.

Williams, T. J., The development of reliability in industrial control systems, *Proc. IEEE Micro.*, 4(6), 66–80, 1984.

Williams, T. W. and Parker, K. P., Design for testability—a survey, *IEEE Trans. Comput.*, C-31 (1), 2–14, 1982.

© 2003 by Béla Lipták

1.11 Instrument Evaluation

J. BARTH, W. M. WALRAVEN (1995) **ROBERT J. SMITH II** (2003)

Instrumentation evaluations are difficult to accomplish in the field. Independent evaluations by users and associations prove to be the best sources for determining whether a particular instrument will work in a given application. Manufacturers' specifications can provide many details about the instrument, but comparing apples to apples is sometimes difficult.

Instrumentation undergoes rapid changes every year. The pressure on manufacturers to implement techniques that are novel in theory proves to be a challenge. The development cycle is furious, resulting in instruments that do not meet users' expectations. This results in:

1. Delays in design/engineering, construction, and start-up
2. Increased cost for commissioning
3. Decreased performance of the plant's process or adverse consequences on personnel, plant, or the environment

End users cannot assume these risks in today's market. Although the supplier usually corrects problems with the instruments, the cost of any resulting damage is still paid by the end user.

Independent evaluation has become difficult for users whose time constrains do not allow them to perform tests that verify certain design criteria of a particular instrument. When it was found that cooperative evaluations could substantially reduce the costs and workloads for the individual users, internationally orientated instrument users' associations were founded.

EVALUATION RESULTS

Statistics show the potential problems one might expect from an instrument (see Table 1.11a). Improvements have increased over the years. This implies that evaluation results have provided manufacturers with feedback that benefits the user. The types of instruments evaluated are shown in Figure 1.11b. It is desirable for a manufacturer to have a good quality management system, based on internationally accepted standards, such as those of International Standards Organization (ISO),

TABLE 1.11a
Instrumentation Evaluation Results (Numbers Represent Percentages of Population)

	1963–77	*1980–82*	*1984–88*	*1995–99*
Defective on arrival	25	18	7	18
Defective during testing	17	35	17	18
Outside manufacturer's own specifications	27	48	33	49
Variations in output in excess of 0.5%	N/A	N/A	29	N/A
Sensitive to external influences that cannot be expressed in percentages	N/A	N/A	68	N/A
Unanticipated effects	N/A	N/A	39	N/A
Inadequate documentation	54	47	25	86
Modified after evaluation	29	35	44	27
Population (number of reports issued)	710	193	750	105

Data provided by Evaluation International.

© 2003 by Béla Lipták

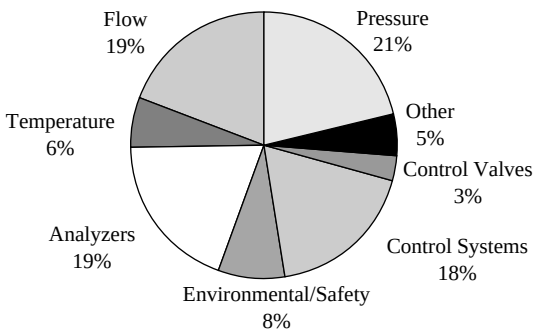

FIG. 1.11b
Type of instruments evaluated by WIB, SIREP, and EXERA from 1984–1988 (268 reports).

to ensure that its instruments all have the same characteristics. Independent firms regularly audit these systems. It has been found, however, that even the most reputable auditors sometimes lack the instrumentation know-how needed to perform an effective audit. This weakness can be remedied by the participation of an instrument engineer on the audit team.

ORGANIZATION

The International Instrument Users' Association (WIB) is a nonprofit organization located in The Hague, the Netherlands. It has more then 50 members worldwide. Its working language is English. An executive elected by and from the members is responsible for the association's general policy and finances, while a full-time professional staff handles day-to-day business.

The association's funds are provided by the annual membership fees, which are determined at the General Members Meeting. After the deduction of a share for organizational costs, each member has a say in determining the evaluations upon which the balance is spent.

The evaluation work is always contracted out to independent, internationally renowned laboratories such as the Netherlands Organisation for Applied Scientific Research (TNO), Sira Certification Service, NEL Laboratories, Laboratoire Central des Industries Electriques (LCIE), The KEMA group, and so on. The interested members and the manufacturer base the work on a mutually acceptable test program. After completion of the evaluation, all findings are reported along with any observations from the manufacturer. The reports contain an objective comparison with the manufacturer's specifications and do not provide a rating of *good* or *not recommended*. Applications and requirements vary so widely that only the individual user can decide whether the instrument is suitable for a particular application. Similar user associations exist in the United Kingdom (e.g., SIREP International Instrument Users Association) and France (Association des Exploitants d'Equipements de Mesure, de Régulation et d'Automatisme, EXERA). A Liaison Agreement was concluded in 1982 to ensure similarity in reporting and a free exchange of reports and other information. The three associations together have approximately 100 members, covering many multinationals in markets varying from oil, chemical, steel, food, and beer to utilities such as the electricity, gas, water, and nuclear industries.

EVALUATION METHODOLOGY

Evaluations of instruments and systems aim at confirming the claims made by manufacturers' specifications. Where these are lacking, user requirements or relevant IEC/ISO evaluation standards may be used. The methodology in use in the evaluation laboratories of TNO, Netherlands, provides guidance to the engineers involved in the evaluation. An evaluation is an iterative process in which the evaluator needs the involvement of user and manufacturer for setting up the evaluation objectives and techniques. Evaluation is becoming increasingly complex because of the introduction of sophisticated electronics and software-based data processing, measurement, and communication techniques.

Evaluation requires an analysis of four main aspects of the device being tested, as follows:

1. System configuration in terms of functional and physical modules
2. Functions relevant for the user
3. Properties relevant to the quality of the functions
4. External environmental and operating conditions that affect performance

The first three items can be interrelated with the last one in a multidimensional matrix that has the structure shown in Table 1.11c. Each field represents a test. In actual practice, not all possible tests will be performed. The choices by the parties involved (user, manufacturer, evaluator) may depend on priorities of the intended application, cost and time constraints, and knowledge of system performance based on other applications. The completed matrix then forms the unambiguous agreement on the evaluation program, which still has to be supplemented by a description of the tests.

SYSTEM CONFIGURATION

The description of a system to be evaluated is based on the functional models of Figure 1.11d and the physical mode of Figure 1.11e.

In the functional model the following modules are distinguished:

- The input module converting the physical quantities (analog and/or digital) to be measured into signals suitable for further processing.

© 2003 by Béla Lipták

TABLE 1.11c
Evaluation Matrix

	Subsystem A												*Subsystem Layer*
	Function a					*Function b*				*Function c*			*Functions Layer*
	Properties												
Test Conditions	*K*	*L*	*M*	*N*	*O*	*K*	*L*	*P*	*Q*	*M*	*N*	*Q*	*R*	*Properties Layer*
Condition A														
1														
2														
3														
Condition B														
1														
2														

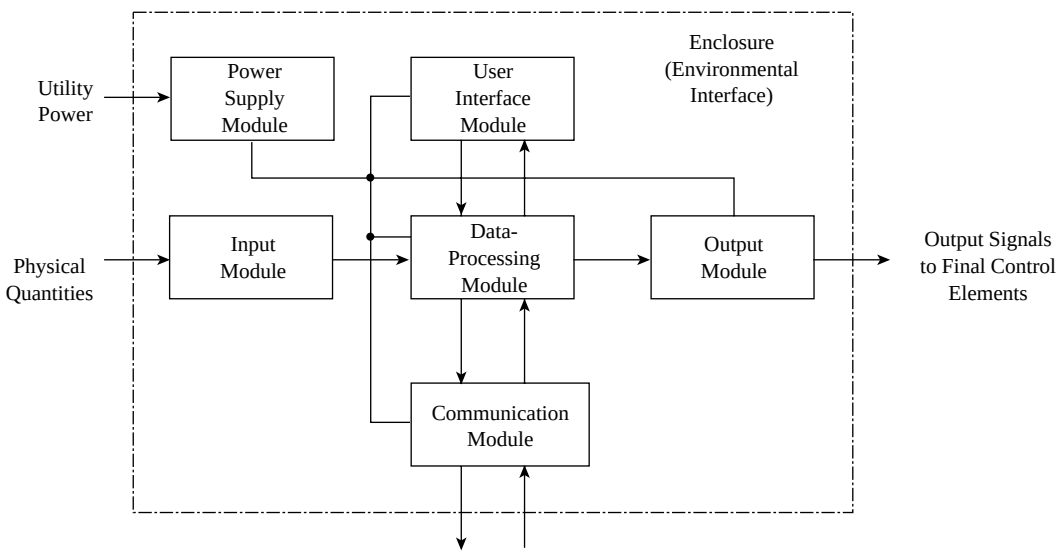

FIG. 1.11d
Functional system model.

- The data processing module that processes the various input signals (measurements, human inputs, and foreign system inputs) through a library of algorithms and programs for self-monitoring and maintaining integrity, security, and data storage. It sends the processed data to the various output facilities.
- The output module providing signals suitable for steering final control elements such as valves or motors.
- The communication module that provides a digital communication between the various elements or units of a system or with foreign systems. This does not apply to single, stand-alone instruments.
- The user interface module providing means for manual control and access to relevant data including data presentation (measurements in real time or historic trends and system status).
- The power supply module providing properly conditioned power to the system modules.
- The enclosure providing environmental protection. It may consist of a simple housing, but it can also provide temperature control and vibration protection through active dampers.

The physical model of Figure 1.11e shows the physical elements (subsystem, units, and so on) that can be identified in a system and are its building blocks. Specific system configurations for specific applications can be built that utilize the various physical elements in any required amount within

© 2003 by Béla Lipták

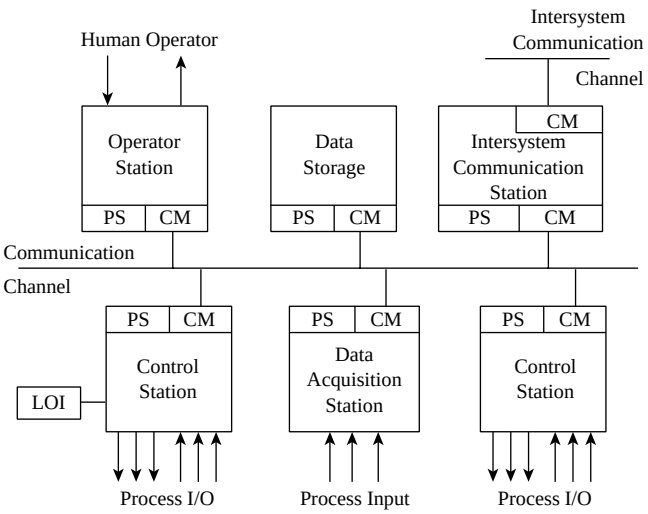

FIG. 1.11e
Physical system model: CM = communication interface module; PS = power supply module; LOI = local operation interface module.

the overall limitations of a system. Each physical element may be equipped with all or some of the basic functional modules described above.

The modules and elements of systems from different manufacturers may differ considerably in size and capabilities. The subdivision of instruments and systems into elements and modules is only relevant and practical when they can be treated and tested as separate entities and when it provides relevant information.

SYSTEM FUNCTIONS

A system function is defined as the intended relationship between a dependent variable (output) and one or more independent variables (inputs) of a system of a system element (subsystem, unit, and so forth). System functions are distinguished at the following three different hierarchical levels:

1. Management (strategic) level, dealing mainly with functions related to efficiency aspects.
2. Process measurement and control (operations) level, dealing with functions for measuring, controlling, and supervising the energy and material flows in a process or the product quality.
3. Support level, consisting of auxiliary functions at the operations level (accessible to the user) and compensation functions provided for counteracting environmental influences (not accessible to the user).

The functions of interest to system users are grouped together as follows:

- Process I/O functions (measurement, actuation)
- Data processing functions (reporting, alarming, data storage, optimization, real-time clock)
- Control functions (continuous, batch, logic, and sequential control)
- Communications functions
- Human I/O functions
- Auxiliary functions (configuration, self-diagnostics, supply, environmental protection)

PROPERTIES

System properties are grouped into the following categories: functionality, accuracy, dependability, operability, safety, and non-task-related. Each category deals with a specific set of system performance aspects.

Functionality is the extent to which a system is provided with an inherent basic hardware and software structure with which specific functional structures can be formed to control processes. Functionality comprises system capacity (number and size of elements, network structure, software size and structure), flexibility, configurability, compatibility, robustness, and so on.

Accuracy is the closeness of agreement between the theoretical function concepts and their material-bound (imperfect) realization. Accuracy comprises conformity errors, hysteresis, repeatability, and resolution. Accuracy is a property specially related to functions for measuring, controlling, processing, observing, and manipulating quantities such as pressure, temperature, density, current, and functions for calculation and communication. In systems, the routes that data follow through the functional modules affect the accuracy of data. Measurement data obtained at one module may appear with different accuracy at a local or a remote operator interface. Accuracy can be quantified either in absolute values such as V, mA, bar, or percent of full scale, or in relative values such as scale factor or percent of reading.

Dependability is the extent to which the system can be relied upon to exclusively and correctly perform the tasks and duties delegated to it. Dependability comprises availability, reliability, maintainability, integrity, and security. Some of the dependability aspects are probabilistic, while others are deterministic in nature. Dependability is strongly affected by adding redundancy to a system.

Operability is the degree to which a system is provided with the means for observing and manipulating the operation of a process. It also includes the ability to observe and manipulate the operation of a system. Operability depends on the tools and procedures for giving commands and calling up and representing process data and on the speed of response for executing commands and providing data to the demanding recipient. The term *speed of response* is related to transmission of information from:

- Process (measurement)-to-process (actuator), as in a control loop
- One system element to another system element
- Process or system element to the user (operator) and vice versa

© 2003 by Béla Lipták

Safety is the extent to which a system is provided with facilities that exclude hazards to persons, plant equipment, and the environment. Safety depends on the exclusion of and protection against electrical shocks, exceptionally high temperatures, radiation, emission of dangerous or poisonous gases, explosion and implosion, and fire. The safety aspects are in general subject to tight, well-defined rules for approval.

Non-task-related properties are not related to the above groups, and they include documentation, training, system identification, physical dimensions, weight power consumption, and so forth.

TEST CONDITIONS

Proper system operation will be affected by external environmental conditions at the application area and the demands for plant operation. Along with the application boundaries specified by the manufacturer, they provide the data for definition of the test conditions. Based on the main links between a system and the environment and demands, the test conditions are divided into the following domains:

- Process
- Utility
- Foreign systems
- Environment
- System tasks
- User
- System

Each of these domains is described below.

The process domain considers disturbances that enter a system via the I/O connections to the process, such as common- and series-mode signals, line break, earthing, conducted RFI, load effects, and so on. At the sensors and actuators, a system is in direct contact with the product, providing information concerning specific conditions of the product, such as temperature, pressure, pH, density, and corrosiveness.

The utility domain considers mainly electrical disturbances entering the system via power supply lines, such as voltage and frequency variations and interruptions, high-frequency noise, and transient overvoltages.

The foreign systems domain considers mainly electrical disturbances entering the system via the links with foreign systems, such as common-mode noise, transient overvoltage signals, short circuits, and open circuits on bus cables.

The environment domain considers a large range of disturbances, such as ambient temperature and humidity, corrosive media, dust, radiation (heat, UV, RFI), vibration, and so forth.

The system tasks domain considers disturbances imposed on a system by the various control and data acquisition tasks under normal and critical conditions (high alarm rates, periodic reporting, and so on), overload conditions (too many tasks at too high a speed), and demand from foreign systems.

The user domain considers disturbances caused by incorrect or unauthorized actions of operators and maintenance personnel.

The system (hardware) domain considers disturbances imposed on a system by the appearance of component failures in the system hardware.

EVALUATION TECHNIQUES

From the larger variety of evaluation techniques available, some techniques developed for the evaluation of microprocessor-based systems have been selected as examples for description herein.

Dependability is challenged by conditions in the hardware domain such as:

- Loss of the supply signals on printed circuit boards due to fuse burnout
- Loss of operation of units, subsystems, or their redundant parts
- Component failures and rupture of bus cables
- Incorrect connections of cables by maintenance personnel
- Incorrect exchange of printed circuit boards

In these failed or erroneous situations, the following points are raised to reveal the different dependability aspects of the system:

- Failure detection and reporting performed correctly by the self-diagnostics (integrity)
- Correct continuation of operation through redundant units (availability)
- Security against failure propagation to other units (integrity)
- The possibility of hot-swapping parts

The speed of response as an aspect of operability is defined and measured under arbitrarily agreed-upon reference conditions. For a system under test, these conditions comprise the hardware modules involved, the implemented functions and tasks, and the load under steady conditions.

Then the system is stressed in the task domain and investigated for delays in data transfer loss of information, or operation. These conditions may be

- A change of the internal load of a subsystem by changing cycle times or number of active function blocks
- Increase of the external demand by means of the introduction of large amounts of alarms or requests
- Changing the allocation of functions and tasks between subsystems mutually or between subsystems/ peripherals

© 2003 by Béla Lipták

Relevant Standards

IEC 68 series, Basic environmental testing procedures.
IEC 546–1 1987, Controllers with analogue signals for use in industrial process control systems, Part I, Methods of evaluating the performance.
IEC 746 series, Expression of performance of electrochemical analyzers.
IEC 770 1984, Methods of evaluating the performance of transmitters for use in industrial process control systems.
IEC 873 1986, Methods of evaluating the performance of electrical and pneumatic chart recorders for use in industrial process control systems.
IEC 1069 1991, Evaluation of system properties for the purpose of assessment of industrial process measurement and control systems, Part I, General Considerations.

Bibliography

Prellwitz, S.B., Do your instruments meet their specs: evaluation alternatives, *InTech*, March 1985.

© 2003 by Béla Lipták

1.12 Binary Logic Diagrams*

G. PLATT (1970, 1982) **R. A. GILBERT** (1995, 2003)

Diagrams are key components of a process documentation portfolio. The complexity of a modern production process has increased the process engineer's use and reliance on symbolic representations of a process and its unit operations. This section reviews diagram symbols and their role in binary logic diagrams. The complete description of a production process demands the use of several types of descriptive diagrams. The three important drawings that make up a specific process documentation package are the process function diagram (a site-specific binary logic diagram), the process flow sheet (a piping and instrument diagram [P&ID]), and a hardware diagram (a detailed equipment wiring diagram).

LOGIC DIAGRAMS

Consider a section of a chemical vapor deposition process that includes only a backup vacuum roughing pump. The process function diagram, Figure 1.12a, along with its accompanying process flow sheet, Figure 1.12b, are expected to provide all of the information required to understand the control scheme and general operation of this process subsystem. For the example illustrated, the process flow sheet indicates the equipment and instrumentation associated with the operation of the backup vacuum pump. However, a P&ID has its limitations. For example, this P&ID indicates that the vacuum pump is water-cooled but does not provide any plumbing details. In addition, the diagram makes little or no attempt to indicate the specific details of the reactor's backup vacuum control scheme. In fact, key control components, start and stop pushbuttons for example, are commonly omitted in P&IDs.

The role of the process function diagram and the binary logic diagram is to illustrate the overall control flow of the process. The diagram is a combination of logic and instrumentation symbols that reflects the overall control strategy. It also includes the details for the successful operation of the specified process equipment. For the example under consideration, the binary logic diagram indicates the operation requirements for the auxiliary vacuum pump. Note that the symbol for this pump doesn't even appear in the diagram; however, its operational characteristics with respect to the cooling water system are clearly indicated. In addition, the

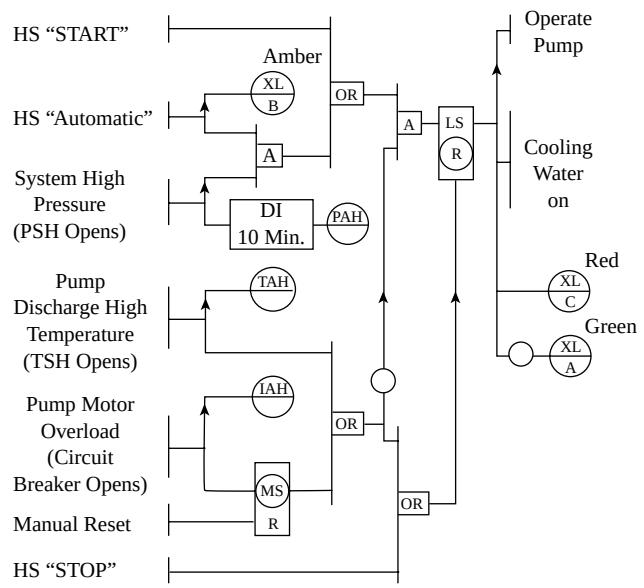

FIG. 1.12a

Logic diagram for standby vacuum pump with cooling water on and water valve (UV) open (see Table 1.12g).

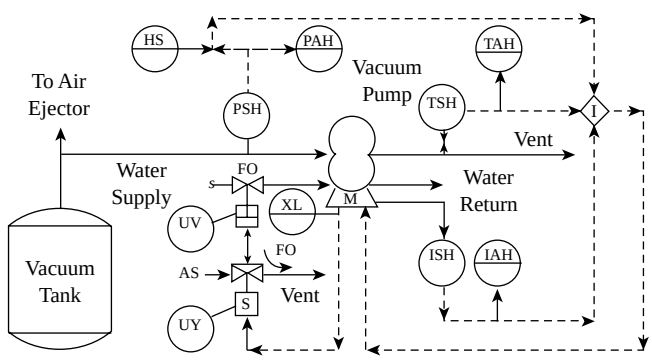

FIG. 1.12b

Control system for standby vacuum pump.

diagram does not provide for the reader or require the reader to possess knowledge of the complex and specialized circuit information associated with the assembly of the instrumentation presented. Its function is to provide an informed view

* Permission by the ISA to abstract from its standard, ANSI/ISA S5.2 Binary Logic Diagrams for Process Operators, is gratefully acknowledged.

© 2003 by Béla Lipták

of the process to operating personnel, maintenance workers, process engineers, and others who need to appreciate the expected behavior of the specified process equipment.

LOGIC SYMBOLS

Although the symbols selected to represent the logic operations associated with a control scheme are arbitrary, the choice of logic operations is universally consistent. All process function diagrams describe a process control scheme as a sequence and/or combination of the AND, the OR, the NOT, the NAND, and the NOR logic operations. Table 1.12c summarizes the ANSI/ISA standard symbols that describe these operations. The additional symbols in the table illustrate other commonly represented logic functions.

It is important to recognize that binary logic diagrams are "living" documents. Because they illustrate a process control procedure, binary logic diagrams also reflect any updates in process control strategy as well as the personalities of the process personnel who create and maintain the documents. As a result, it is likely that a selected (i.e., standard) set of diagram symbols will be modified within a company's various plant locations across the country, and completely different symbol sets may be adopted by different process industries.

Table 1.12d summarizes another common set of logic symbols. These symbols are often used in the description of digital electronic circuit operation. As a result, they are particularly popular with process technical personnel with computer science or electrical engineering backgrounds. Although this and other varieties of logic symbolism for binary logic diagrams exist, once the diagram reader's attention is focused on the logic operations represented, the significance and meaning of even unfamiliar symbols becomes apparent.

PREPARATION OF LOGIC DIAGRAMS

The number of logic operations involved dictates the arrangement of the symbols on a binary logic diagram. There are no specific rules as to symbol placement. Most process function diagrams depict the flow of information from top to bottom and left to right. Lines interconnect the logic symbols, and arrowheads might be added to lines where the input to output directions are not clear.

A summary of possible final control element operating states is often added to the diagram when the control action is not the result of one of two specific alternative states. For example, if the control action involves a control valve, it is not sufficient to indicate that the valve is not closed. This could mean that the valve is completely open or that the valve is in some position between almost closed and wide open. Since logic diagrams should be interpreted as literally as possible, in this example, the reader would accept that the diagram indicates that the valve was not closed but make no assumptions as to its degree of openness.

By contrast, if a logic diagram indicates that the result of the logic operations is the control of a constant-speed pump, it is sufficient to indicate the pump's state as either operating or not operating, i.e., the logic one or logic zero state. In this case, it would be the reader's responsibility to recognize that any variation in pump throttling was not the result of the control signal to the pump but rather due to the action of a separate signal to its accompanying valve. The two possible pump logic signals are responsible only for starting or stopping the transfer of energy to the pump. Any planned adjustment in the fluid flow rate is not the result of the logic one or logic zero binary signals delivered to the pump.

The binary logic diagram may have additional inputs to its logic symbols that do not represent actual process variables. For example, a process operation may be affected by loss of a component power supply. This would be especially true if the process equipment involved had electronic memory elements, and that memory was vital to the specific operation under consideration. Thus, the power failure might adversely affect the performance of one part of the process but not shut down its operation or directly influence the operation of other elements of the process. To take such situations into account, it would be necessary to consider the effect of that power loss on the logic of that component's operation and indicate what the new control action might be. In such cases, power or loss of power should be entered as a logic input to the diagram. The diagram should then indicate the expected sequence of events as if the power signal were just an additional binary process input to the entire process.

The indication of time delays and other time functions is common in binary logic diagrams. It is recommended for clarity that a single time function symbol be used to represent each single time function in the diagram. The use of one symbol to represent a sequence of unusual or complex time functions in immediate succession is often confusing to the reader. Even the correct use of NOT operations combined with a time function is confusing and often leads to the diagram reader reaching the opposite conclusion intended from these symbol combinations.

It is quite common for the binary logic diagram for a process to require more than one page of drawings. When the diagram has more than one page, each sheet should be clearly labeled with the plant location, the process identification, the last update to the diagram, and which page out of the total this sheet happens to be. For example, each sheet of an 11-page logic diagram might be labeled:

"Cheese Curd Vacuum Packing Process"
Tug Hill Packing Plant

The fifth sheet for this process diagram would have the additional information:

"Auxiliary Vacuum Pump Control"
Last Update: March 15, 2003
Sheet 5 of 11

© 2003 by Béla Lipták

TABLE 1.12c
Binary Logic Diagram Symbols

Function	*Symbol*	*Definition and Truth Table*	*Example*
INPUT	(Input statement) ├— Statement may be preceded by instrument balloon with tag number.	Input for logic value or sequence of values.	Start chemical injection by pushbutton. Start injection manually ├—
OUTPUT	(Output statement) ├— Statement may be followed by instrument balloon with tag number.	Logic value provided as an output signal because of an input logic sequence.	The logic sequence causes drawoff to cease. Stop drawoff ├—
AND	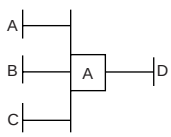	Output *D is* active only when inputs *A*, *B*, and *C* are all active. C: A B O I; O O O O; O I O O; I O O O; I I O D	Operate pump if feed tank level is high and the discharge valve is open. 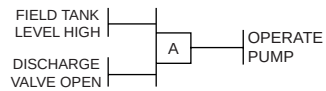
OR	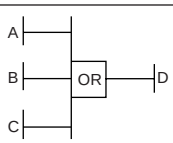	Output *D* is active only if and while one or more of inputs *A*, *B*, and *C* are active. C: A B O I; O O O D; O I D D; I O D D; I I D D	Stop compressor if cooling water pressure is low or bearing temperature is high or both. 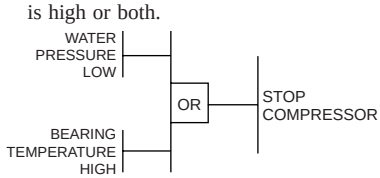
QUALIFIED OR	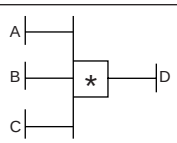 *Insert numerical quantity (see "Definition").	Output *D* is active only if and while a specified number of inputs *A*, *B*, and *C* are active. Mathematical symbols shall be used, as appropriate, in specifying the number, e.g., ≥3, to denote *3 or more.*	Operate feeder if and while two and only two mills are in service. 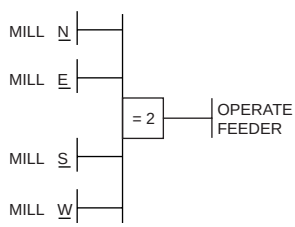
NOT	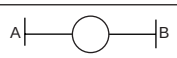	Output *B* is active only if and while input *A* is passive.	Close valve if and while pressure is low. 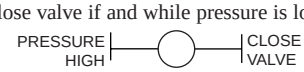
FLIP-FLOP MEMORY	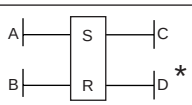 *If output *D* is not used, it shall not be shown.	*S* denotes *set memory* and *R* denotes *reset memory.* Output *C* is active as soon as input *A* is active. *C* remains active, regardless of the subsequent state of *A*, until the memory is reset, i.e., terminated when *B* is active. *C* remains passive, regardless of the subsequent state of *B*, until *A* causes the memory to be set. Output *D*, if used, is active when output *C* is passive and *D* is passive when *C* is active (i.e., a signal flip-flop). *Input-Override Option* If inputs *A* and *B* are active simultaneously, and if *A* is then required to override *B*, then *S* should be encircled, i.e., if *B* is to override *A*, then *R* should be encircled. *Loss-of-Power-Supply Option* Required action of the memory on loss of power shall be symbolized by modifying the *set* letter, *S*, as follows:	If standby pump operation is initiated, the pump shall operate, even on loss of the logic power supply, until the process sequence is terminated. The pump shall operate if START and STOP commands exist simultaneously. 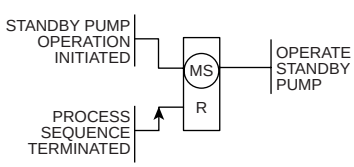

© 2003 by Béla Lipták

TABLE 1.12c Continued
Binary Logic Diagram Symbols

Function	*Symbol*	*Definition and Truth Table*	*Example*

Modified Symbol	*Required Memory Action on Loss of Power*
S (unchanged)	Was not considered by logic designer
LS	Memory lost
MS	Memory maintained
NS	Is not significant, no preference

The use of a logic feedback to symbolize a memory that is lost in the event of loss of power although depicted below, is not recommended. Thus, the following shall not be used:

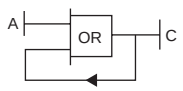

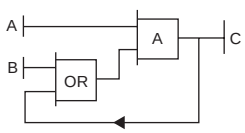

TIME ELEMENT

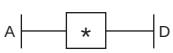

*Insert symbolism for specific functions and time interval (see "Definitions").

Basic Method
This uses the following specific symbols:

Symbol	Meaning
DI	Delay Initiation of output. The continuous existence of input *A* for a specified time causes output *B* to become active when the time expires. *B* becomes passive when *A* becomes passive.
DT	Delay Termination of output. When input *A* is active, output *B* becomes active. When *A* becomes passive for the specified time, Output *B* will become passive (terminate) as well.
PO	Pulse Output. If Input *A* becomes active and then immediately passive, output *B* is active for specified time.

If a Pressure Alarm High is active (in alarm) for 4 sec, the auxiliary vacuum pump is engaged. The pump shuts down when the PAH becomes passive.

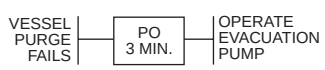

When the auxiliary vacuum pump is active (running), the water jacket pump is also engaged. When the auxiliary vacuum pump is shut down, the water jacket pump remains on for 5 min before it shuts down. If vacuum pump is started before 5 min is up, water jacket pump stays on.
If vessel purge fails even momentarily, operate evacuation pump for 3 min and then stop the pump.

In addition to this detailed labeling of each sheet of the diagram, care must be taken to identify lines that come from or go to other sheets of the drawing. There are no standards for accomplishing this, but one good practice is to repeat the label on a line that leaves one sheet as that line begins again on another sheet. Another popular approach to the task is to identify each sheet entrance and exit line with its source and destination. Numbering all exit lines from one sheet from top to bottom and then identifying each line that enters a new sheet in the same manner is the usual approach. With this numbering system in hand, each line entering or leaving a sheet can be identified with its source and destination address.

For example, suppose a diagram line that leaves sheet 5 of a binary logic diagram was labeled 5–7/8–3. This label would identify that logic signal as exit signal 7 from sheet 5 and indicate that it was going to enter sheet 8 as the third external input from the top of the page. To complete the redundancy for this numbering system, 8–3/5–7 would be the label on the third external input line from the top of sheet 8. This tag would confirm that the signal in question indeed was the third external sheet source input signal for sheet 8 and that this particular signal was also the seventh off-the-sheet output from sheet 5. Letters and numbers are often interlaced in this identification scheme, but the source, destination, and redundancy aspects of the system are always maintained.

In summary, the creation of a binary logic diagram requires specific knowledge of how the process is controlled. In addition, this type of process function diagram must be clearly

© 2003 by Béla Lipták

TABLE 1.12d
An Alternate Set of Logic Symbols

Function	Symbol	Definition
AND	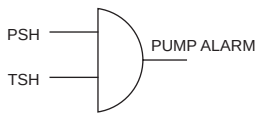	If PSH and TSH are both at logic 1, then output to pump alarm is at logic 1
OR	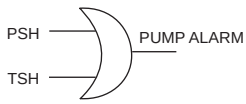	If either PSH or TSH is at logic 1, then output to pump alarm is at logic 1
AND	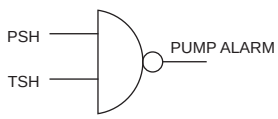	If PSH and TSH are both at logic 1, then output to pump alarm is at logic 0
OR	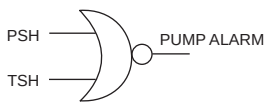	If either PSH or TSH is at logic 1, then output to pump alarm is at logic 0
Mixed	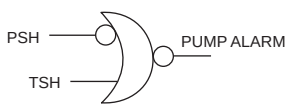	If PSH is at logic 0 or TSH is at logic 1, then output to pump alarm is at logic 0

Note: When logic 1 is assigned to the high physical signal value, the output of an AND device is active when it is at logic 1.

TABLE 1.12e
Intermediate Position Labels

Device State	Definition
Open position	Device 100% open
Not open position	Device less than 100% open (may or may not be closed)
Not closed position	Device more than 0% open
Closed position	Device that is 0% open
Intermediate position	Device at specific position (greater than 0% but less than 100% open)
Not-at-intermediate position	Device at position above or below the specified intermediate position (0% or 100% open)

labeled and religiously updated. Below are several common-sense guidelines that will help develop a good diagram:

1. Develop the logic diagram in such a way that it presents results in a positive logic format. For example, if the result of the logic operation is to completely open a valve, it should be so stated and not be stated as being "not closed."
2. Use a specific separate label to indicate conditions of final control elements that have more than two responses to binary signals. Table 1.12e defines labels for devices that have open, closed, and intermediate positions.
3. Label each input and output of each set of logic operations on every sheet of the diagram.
4. Label each external input or output for each sheet of the diagram so that its source and destination are clearly understood.
5. Adopt a standard set of logic symbols and instrument labels (see Section 1.1), and resist the temptation to modify your logic symbols for the "special situation" that inevitably develops. If the situation cannot be initially explained with relatively simple combinations of AND, OR, NOT, NAND, and NOR symbols, think about it some more until it can be done that way.
6. Avoid using ladder diagrams or ladder diagram logic symbolism. These types of icons are useful when installing or troubleshooting the control scheme but are only routinely used and understood by a small percentage of the technical personnel who need to know about the process.

These useful rules of thumb all follow from one "golden rule."

If the binary logic diagram does not clearly, easily, and unambiguously indicate what is going on in the process, then the diagram is of marginal value and should be reworked until it does.

Following this rule will increase the chances of having the diagram match what it is intended to say with what it actually says.

DIAGRAM INTERPRETATION

Even if authors follow the "golden rule" when creating logic diagrams, interpreting logic diagrams is not always an easy assignment. Consider the example process presented in this section. Its process function diagram, Figure 1.12a, describes the operation of a standby vacuum pump system for a process that needs to maintain a specified pressure in the vacuum tank illustrated in Figure 1.12b. Information about the panel instrumentation indicated in Figure 1.12b is provided in Table 1.12f. Complete details about the other instrumentation symbols used in Figure 1.12b are available in Section 1.1.

The logic diagram shown in Figure 1.12a indicates that the backup pump control is based on the binary value from seven independent process input signals. By contrast, a close inspection of the diagram reveals the existence of only one independent output signal. This example's high ratio of input to output signals is typical of most binary logic diagrams, indicates the reason why logic diagrams might be difficult to interpret, and suggests that a good way to analyze the entire diagram is to study it from right to left.

© 2003 by Béla Lipták

TABLE 1.12f
Control Panel Instrumentation

Panel Symbol	*Instrument Function*
HS	Manual control switch for pump operation. Three momentary-contacts for Start, Automatic, and Stop actions.
PAH	Alarm if vacuum fails. Alarm sounds 10 min after backup vacuum pump start request.
TAH	Temperature alarm if pump discharge temperature rises above normal operating value.
XL-A	Green pilot lamp when bright indicates pump motor circuit breaker is not closed, i.e., pump cannot operate.
XL-B	Amber pilot lamp when bright indicates pump is ready for automatic start.
XL-C	Red pilot lamp when bright indicates pump motor circuit breaker is closed, i.e., the pump can operate.

Note: XL-C is not connected to a pump motor feedback signal. It cannot confirm that motor is on.

As stated above, the condition of all four output logic signals in Figure 1.12a (i.e., the red and green pilot lamps, the cooling water control value, and the pump operation signal) depends on the logic state of a single output. This is represented as the logic output from the "memory lost on loss of power" memory operation of the LS flip-flop located on the upper far right side of the diagram. The logic one signal on this output will cause the pump to be engaged, the cold-water control valve to open, and the red closed motor circuit-breaker light to glow. The logic signal inversion represented by the circle symbol between the flip-flop output and the green not-closed motor circuit-breaker light (XL/A) assures that the green light is not glowing when the flip-flop output is at logic one.

It should be clear at this point in the analysis of Figure 1.12a that the input signals to the LS flip-flop are the key to understanding the operation of the backup vacuum pump. The diagram indicates that this flip-flop is controlled by two input logic signals: a signal that comes from an AND operation (the "pump run" AND) and a signal that comes from an OR operation (the "pump reset" OR). It is also clear, but not necessarily appreciated by the reader, which of these two input signals is more important.

The output of the "pump reset" OR device goes to the reset terminal of the memory lost on loss of power to the flip-flop. If this OR output is at logic one, the flip-flop's output resets to logic zero. This logic signal forces the pump to shut down, the cold water control valve to close, and the red panel indicator (XL/C) to go off.

The circle around the letter R in the memory lost on loss of power flip-flop symbol indicates that a logic one output from the "pump reset" OR will initiate the flip-flop reset action even if the output of the "pump run" AND device is at logic one. Since the HS "STOP" signal is directly connected to one of the inputs of the "pump reset" OR, placing the hand switch in the HS "STOP" position allows the pump to receive the logic zero reset signal from the LS flip-flop and stop running.

Although not directly connected to the "pump reset" OR, activation of either the PUMP MOTOR OVERLOAD CIRCUIT BREAKER or the PUMP DISCHARGE HIGH TEMPERATURE (TSH) alarm produces logic signals that generate the same control action as the HS "STOP" input. These two control signals feed to an OR that is connected to the other input of the "pump reset" OR. Therefore, a logic one output signal from this OR produces the same response in the "pump reset" OR as a logic one signal from the HS "STOP".

The "memory maintain on loss of power" flip-flop is located in the lower left portion of Figure 1.12a. It is arranged so that, if both its inputs are activated simultaneously, the PUMP MOTOR OVERLOAD CIRCUIT BREAKER signal overrides the MANUAL RESET signal. In other words, the pump cannot start again until the pump motor overload has been cleared. Once that pump motor circuit problem no longer exists, a logic one MANUAL RESET signal will produce a logic zero on the memory-maintain flip-flop. If the TSH sensor is not in alarm (i.e., at logic zero) or the HS "STOP" is not engaged (i.e., at logic zero), then the logic zero output from the flip-flop is passed directly to the reset input of the memory lost on loss of power flip-flop. Although, at this point, the flip-flop's output still remains at logic zero, and the pump remains off, the pump will engage the next time the "pump run" conditions are satisfied.

"Pump run" operating scenarios are determined by the output of an AND operation. This "pump run" AND is the other input connected to the "memory lost on loss of power" flip-flop. If the output of the "pump run" AND is at logic one, the pump will be turned on. The only constraint on this logic

TABLE 1.12g
Control Valve Operating Sequence

Current Vacuum Pump Status	*Motor Circuit Breaker Auxiliary Contacts*	*Solenoid Valve (UY) Coil*	*Control Valve (UV)*		
			Actuator	*Port*	*Water*
Off	Closed	Energized	Pressurized	Closed	Off
On	Open	De-energized	Vented	Open	On

© 2003 by Béla Lipták

one "pump run" signal is if the reset input to the memory-loss flip-flop is already at logic one. Under that condition, the "pump run" signal will not override the reset, and the pump will not start.

There are two inputs to the "pump run" AND operation. The HS "START," HS "AUTOMATIC," and SYSTEM HIGH PRESSURE (PSH) process signals identified in the upper left corner of Figure 1.12a all eventually feed their logic signals to one of these inputs. Basically, the pump will engage if the hand switch is in the HS "START" position or if it is in the HS "AUTOMATIC" position and the PSH is in alarm, i.e., at logic one. An operator panel alarm function is also provided when PSH goes into alarm. If the pressure alert is not corrected within 10 min (i.e., the backup vacuum pump has not returned the vacuum tank to an acceptable vacuum condition), a panel alarm, PAH, will be activated.

The other input to the "pump run" AND is a gate signal from the TSH and PUMP MOTOR OVERLOAD CIRCUIT BREAKER logic section of the diagram. This gate signal is at logic one only when the pump is not in a temperature or overload circuit alarm condition. If either such alarm condition exists, the gate input to the "pump run" AND would be at logic zero and the pump would not run even if the reset input to the "memory loss on lost power" flip-flop were at logic zero.

ACTIVE AND PASSIVE LOGIC

The example process provided in this section is adequate to illustrate the important aspects of drawing and reading a process diagram. This specific logic diagram is typical with respect to elements in the diagram but not in the number of these elements. To read diagrams that have many more components and interactions among them, it is convenient to initially identify the input and out logic signals as active or passive and then further classify the logic device inputs and outputs as active high or active low. For the example presented in Figure 1.12a, the vacuum pump is active when a logic one signal is presented to that pump. By contrast, the XLA indicator is active when the logic zero signal is presented to it. Thus, the vacuum pump input terminal is identified as an active high input while the XLA indicator input terminal is an active low input. When the vacuum pump is not running, the signal to the pump is the passive logic signal; when the XLA indicator is on, the signal to that device is the active signal. Thus, the entire logic diagram can be initially reviewed by first establishing what the active and passive signals are for each device represented in the diagram and then determining if the input and output terminals for each device are identified as active high or active low terminals.

For this standby vacuum pump example, the AND device that accepts signals directly from the HS "automatic" and PSH field elements has two active high inputs and one active high output. The AND device that controls the LS flip-flop has an active high input, an active low input, and an active high output. The three OR devices each have two active high inputs and one active high output. The efficiency of this identification scheme is appreciated once it is realized that the output of an AND logic device is active only when all its inputs are active, while the output of an OR device is active when any of its inputs are active. Thus, it becomes clear very quickly that the OR device in the lower part of the diagram that deals directly with high-temperature and motor-overload situations can prevent the HS "automatic" input from activating the standby vacuum pump. It also becomes clear that, when the output of that OR device is active, the LS flip-flop is reset, and the vacuum pump would stop if running. In other words, the vacuum pump becomes passive.

FINAL CAUTION

Now that the function diagram in Figure 1.12a has been reviewed, a few concluding remarks are in order. A complete understanding of a process requires all three types of diagrams in the process documentation package. For the example sited, no attention was focused on the hardware diagram. In fact, assumptions were made to facilitate the explanation of Figure 1.12a. For example, Figure 1.12a does not indicate how the green not-closed motor circuit-breaker light (XL/A) is wired. If it uses a pull-up resistor type wiring scheme, then the light is off when the motor is running. However, if XL/A is wired directly to its source, then the inverted logic one from the memory lost on loss of power LS flip-flop will allow the XL/A light to glow. If this were the situation, many binary logic diagram authors would draw a line over the XL/A symbol to indicate that the green not-closed motor circuit-breaker light had an active low input. This would indicate that the light would glow when it detected the low logic signal. Always check the wiring diagram to determine the active/passive signals for all sensors and final control elements included in a binary logic diagram.

The biggest danger when reading a binary logic diagram is projecting what "should" be there instead of reading the diagram as it is written. There are often different views as to how to implement the specific details for a process control strategy. The example process discussed in this section is no exception to that observation. Constructive criticism about a control scheme is an important aspect of improving the control of a process. However, it is important to distinguish between not liking the logic presented in a logic diagram and mentally refusing to read the logic as it is presented in the diagram. The responsibility of binary logic diagram creators is to produce unambiguous diagrams that explain the process's current control logic. The responsibility of binary logic diagram readers is to interpret the diagram without altering its mental image with personal bias about the control scheme described. Once the creator and reader of a logic diagram agree as to what the diagram says, then it is time to discuss

© 2003 by Béla Lipták

the merits of the current control scheme and consider any reader-suggested alterations.

Bibliography

ANSI/ISA S5.2, 1976 (reaffirmed July 13, 1992), Binary Logic Diagrams for Process Operations, ISA, Research Triangle Park, NC.

Platt, G. and Barrikka, N.E., *Process Control: A Primer for the Non-specialist and the Newcomer,* 2nd ed., ISA, Research Triangle Park, NC, 1998.

Course No. 205, Fundamentals of Process Instrumentation, Job Training Systems, Inc., Unionville, PA.

ISA Dictionary of Measurement and Control, 3rd ed., ISA, Research Triangle Park, NC, 1995.

Measurement and Control Basics, 3rd ed., ISA, Research Triangle Park, NC, 2002.

Programmable Controllers, 3rd ed., ISA, Research Triangle Park, NC, 2000.

© 2003 by Béla Lipták

Flow Measurement

2

2.1
APPLICATION AND SELECTION 156

Getting Oriented 156
Special Requirements 157
Differential Pressure 157
Reynolds Number 160
Energy Costs 161
Example 161
Orifice Plates 164
Venturi Tubes and Nozzles 164
Sonic Venturi Meters 166
Pitot Tubes 166
Elbow Taps 166
Target (or Impact) Meters 167
Electromagnetic Meters 167
Turbine Meters 167
Vortex Meters 167
Variable-Area Meters 167
Positive-Displacement Meters 168
Ultrasonic Meters 168
Metering Pumps 168
Mass Flowmeters 168
Low-Flow Applications 169
Specifying the Key Requirements 169
Inaccuracy 169
Safety 170
Installation 171
Cost 171
References 171
Bibliography 172

2.2
ANEMOMETERS 173

Mechanical Anemometers 174
Thermal Anemometers 175
Doppler Anemometers 175
Conclusion 176
Bibliography 176

2.3
BTU FLOWMETERS FOR HEAT EXCHANGERS 177

Mechanical BTU Meters 178
Electronic BTU Meters 179
Reference 179
Bibliography 179

2.4
BTU FLOWMETERS FOR GASEOUS FUELS 180

Measuring Heat Flow by Wobble Index 180
The BTU Flowmeter Loop 181
Applications 181
Conclusion 182
Bibliography 182

2.5
CROSS-CORRELATION FLOW METERING 183

Nuclear Power Plant Applications 184
Determining the Transit Time 184

© 2003 by Béla Lipták

Reliability and Accuracy 185
Nuclear Power Applications 185
The TTFM System 186
References 188
Bibliography 188

2.6
ELBOW TAPS 189

A Simple Flowmeter 189
Location and Size of Taps 189
Units 191
Other d/p-Producing Elements 192
References 192
Bibliography 192

2.7
FLOW SWITCHES 193

Design Variations 195
Solids Flow Switches 197
Bibliography 197

2.8
JET DEFLECTION FLOW DETECTORS 198

Operating Principle 198
Hot-Tapping 199
Conclusion 200
Bibliography 200
Other Sources 200

2.9
LAMINAR FLOWMETERS 201

Theory 201
Hagen–Poiseuille Law 202
Design Parameters 203
Design Calculations for Liquid Service 203
Error Sources 204
Range Extension Techniques 205
Commercially Available Units 206
Conclusion 206
References 206
Bibliography 206

2.10
MAGNETIC FLOWMETERS 208

Theory 210
Advantages 211
Limitations 211
Types of Magnetic Flowmeters 212
AC Magnetic Flowmeters 213
DC Magnetic Flowmeters 213
Dual-Frequency Excitation 214
Other Types 215
Construction of Magnetic Flowmeters 215
Ceramic Liners 217
Probe-Type Units 217
Applications of Magnetic Flowmeters 218
Accuracy and Calibration 220
Errors in Magnetic Flowmeters 220
Effects of Electrical Conductivity of Fluid 221
Installation 222
Signal Considerations and Demodulation Techniques 223
Bibliography 224

2.11
MASS FLOWMETERS, CORIOLIS 225

Measuring Principle and Theory 226
Principle 226
Theory 227
Design of CMF 228
Balancing Systems for CMF 229
Dual-Tube Meters 229
Single-Tube Meters 229
Tube Geometries 229
Sensors 230
Temperature Sensors 230
Security 231
Electronics 231
Signal Processing 231
Communication/Output 231
Technical Data 231
Measuring Accuracy/Range 231
Pressure Drop 231
Influences on the CMF Reading 232
Temperature 232
In-Line Pressure 232
Mounting 232
Vibration 232
Humidity 232
Fluid Velocity 233
Gas Measurements 233
Two-Component Flow 233
Corrosion, Erosion 233
Reynolds Number 233
Installation 233
Mechanical Installation 233
Zero-Point Adjustment (Static/Dynamic) 234
Applications 234
Advantages of CMFS 235
Limitations of CMFs 235
References 235
Bibliography 235

© 2003 by Béla Lipták

2.12
MASS FLOWMETERS—MISCELLANEOUS 237

Radiation-Type Mass Flowmeters 238
Angular Momentum-Type Mass Flowmeters 238
Impeller-Turbine Flowmeter 239
Constant Torque-Hysteresis Clutch 239
Twin-Turbine Flowmeter 239
Coriolis 240
Gyroscopic 240
Linear Mass Flowmeters 240
Indirect Mass Flowmeters 241
Calculating the Mass Flow of Steam 241
Steam Density and Accounting 241
Example 241
Conclusion 241
Reference 242
Bibliography 242

2.13
MASS FLOWMETERS—THERMAL 244

Heat Transfer Flowmeters 245
Bypass-Type Designs 247
Hot-Wire Probes 248
Calibrating Thermal Mass Flow Devices 249
Gas Flowmeter Calibrations 249
Liquid Calibrations 249
References 250
Bibliography 250

2.14
METERING PUMPS 251

Peristaltic Pumps 252
Piston Pumps 253
Diaphragm Pumps 254
Hydraulic-Actuated Metering Pumps 255
Solenoid-Driven Metering Pumps 256
Pulsator-Head Pumps 256
Proportioning Pumps 257
Controllers 257
Pulse-Input Type 257
Analog-Input Type 257
Start/Stop Type 257
Conclusions 257
Reference 258
Bibliography 258

2.15
ORIFICES 259

Head-Type Flowmeters 260
Theory of Head Meters 260
Head Meter Characteristics 261
The Square Root Relationship 261
Density of the Flowing Fluid 261
β (Beta) Ratio 261
Reynolds Number 262
Compressible Fluid Flow 262
Choice of Differential-Pressure Range 262
Pulsating Flow and Flow "Noise" 263
Pulsating Flow 263
Flow "Noise" 263
The Orifice Meter 263
Flow through the Orifice Plate 264
Location of Pressure Taps 264
Eccentric and Segmental Orifice Plates 265
Quadrant Edge and Conical Entrance Orifice Plates 266
The Integral Orifice 267
Installation 268
Limitations 269
Orifice Bore Calculations 271
The Old Approach 271
Orifice Accuracy 275
References 275
Bibliography 276

2.16
PITOT TUBES AND AREA AVERAGING UNITS 277

Theory of Operation 278
Pressure Differential Produced 279
Static Pressure Measurement 279
Single-Ported Pitot Tube 280
Calibration of Pitot Tubes 282
Multiple-Opening Pitot Tubes 282
Area-Averaging Pitot Stations 283
Special Pitot Tubes For Pulsating Flow 285
References 286
Bibliography 286

2.17
POLYPHASE (OIL/WATER/GAS) FLOWMETERS 287

Wet-Gas Metering 288
Venturi Meters 288
Algorithms for Wet-Gas Measurement 288
Theory of Operation of Wet-Gas Metering 288
de Leeuw Wet-Gas Venturi Correlation 289
Liquid Mass Flow Rate Correction Algorithm 289
Liquid Density Calculation Algorithm 290
Upstream Temperature Correction and Pressure Recovery 290
Gas Mass Fraction Estimation Using Tracer Techniques 290
Solartron-ISA Dualstream II™ Theory 290
Multiphase Flowmeters 291
References 293
Bibliography 293

© 2003 by Béla Lipták

2.18
POSITIVE-DISPLACEMENT GAS FLOWMETERS 294

The Diaphragm Meter 295
Rotary Meters 295
The Lobed Impeller 296
Sliding-Vane Meters 296
Rotating-Vane Meters 296
High-Precision Gas Flowmeter 296
Application Notes 296
Testing and Calibration 297
Advantages 297
Bibliography 297

2.19
POSITIVE-DISPLACEMENT LIQUID METERS AND PROVERS 299

Overview 300
Rotating Lobe and Impeller (Type A) 300
Nutating Disk (Type B) 301
Oval-Gear Flowmeters (Type C) 301
Piston Designs (Type D) 302
Reciprocating Piston 302
Oscillating Piston 302
Rotating Vane (Type E) 303
Viscous Helix (Type F) 303
High-Precision and Specialized (Type G) 304
Provers (Type H) 304
Accessories and Intelligent Electronics 305
Bibliography 305

2.20
PURGE FLOW REGULATORS 307

Detection of Low Flows 307
Purge Rotameters 308
Bibliography 309

2.21
SEGMENTAL WEDGE FLOWMETER 310

References 312
Bibliography 312

2.22
SIGHT FLOW INDICATORS 313

Design Variations 313
Dual-Window and Full-View Designs 316
Conclusion 317
Bibliography 317

2.23
SOLIDS FLOWMETERS AND FEEDERS 318

Solids Handling Equipment 319
Hoppers and Accessories 319
Material Characteristics 320
Taking Samples 320
Feeder Designs 321
Vertical-Gate 321
Rotary-Vane 321
Screw Feeders 321
Vibratory Feeders 322
Shaker Feeders 322
Roll Feeder 322
Revolving-Plate Feeders 323
Gravimetric Feeders 323
Early Belt Feeder Designs 323
Feed Rate Control 324
Belt Load Control of Constant-Speed Belts 324
Belt Speeds and Blending 325
Belt Speed Selection Guidelines 325
Varying the Belt Speed 325
Limitations of Belt Speed Control 325
Precision of Weighing 326
Nuclear Belt Loading Detectors 326
Digital Control 326
Batch vs. Continuous Charging 327
Vertical Gravimetric Feeders 327
Loss-in-Weight Flowmeters 328
Continuous Operation 328
Equipment 328
System Sizing 329
Conclusion 329
Dual-Chamber Gravimetric Feeder 329
Dynamic Solids Flowmeters 330
Impulse-Type Solids Flowmeter 330
Accelerator-Type Flowmeter 330
Volumetric Flowmeters 331
Cross-Correlation Solids Flowmetering 331
Solids Flow Switches 332
Mass Flow Measurement of Pulverized Coal 332
Detecting Mass Concentration 332
Measuring the Coal Velocity 333
Bibliography 333

2.24
TARGET METERS 335

Drag-Body Design 336
Bibliography 336

2.25
TURBINE AND OTHER ROTARY ELEMENT FLOWMETERS 337

Liquid Turbine Meters 339
Electronic Display Units 340
Linearity and Repeatability 340
Viscosity and Density Effects 340
Meter Sizing 341

© 2003 by Béla Lipták

Pelton Wheel Meters 342
Meter Characteristics and Features 343
Mechanical Installation 344
Electrical Installation 344
Gas Turbine Meters 345
Twin-Rotor Turbine Meters 346
History 346
Twin-Rotor Design 346
Applications and Features 347
Dual-Turbine Designs 348
Dual Turbines Rotating in the Same Direction 348
Operation 348
Dual Turbine with Counter-Opposed Rotation 348
Comparing the Three Two-Turbine Designs 350
Impeller and Shunt Flowmeters 350
Insertion-Type Flowmeters 350
Optical Flow Sensors 351
Paddlewheel Flowmeters 352
Bibliography 352

2.26 ULTRASONIC FLOWMETERS 353

Transit-Time Flowmeters 355
Frequency-Difference Type 355
Flowmeter Construction 355
Application and Performance 356
Doppler Flowmeters 357
Application and Performance 358
Displays, Receivers, and Intelligent Units 358
Advantages of Ultrasonic Flowmeters 359
Recent Developments 360
References 360
Bibliography 360

2.27 VARIABLE-AREA, GAP, AND VANE FLOWMETERS 362

Rotameters 363
Sizing 365
Liquids 365
Gases or Vapors 365
Rotameter Characteristics 365
Rotameter Types 367
Bypass and Pitot Rotameters 367
Tapered Plug and Piston Meters 368
Gates and Vanes 369
Bibliography 370

2.28 V-CONE FLOWMETER 371

Theory of Operation 371
Operating Features 372
Bibliography 373

2.29 VENTURI TUBES, FLOW TUBES, AND FLOW NOZZLES 374

The Classic Venturi 375
Short-Form Venturies 375
Installation 377
Flow Calculations 377
Flow Tubes 378
Flow Nozzles 379
Application Considerations 380
Critical-Velocity Venturi Nozzles 380
Accuracy 381
Differential Pressure Measurement 381
Conclusion 381
Reference 383
Bibliography 383

2.30 VORTEX AND FLUIDIC FLOWMETERS 384

The Vortex Shedding Phenomenon 385
The Detector 386
Features 388
Selection and Sizing 388
Installation Requirements 390
Vortex-Precession (Swirl) Meters 392
Fluidic (Coanda Effect) Meters 393
Characteristics 393
Conclusion 393
Bibliography 394

2.31 WEIRS AND FLUMES 395

Weirs 396
The Parshall Flume 397
The Palmer Bowlus Flume 398
The Kennison Nozzle, Parabolic Flume, and Leopold Lagco Flume 399
Detectors for Open-Channel Sensors 399
References 400
Bibliography 400

© 2003 by Béla Lipták

2.1 Application and Selection

D. J. LOMAS (1982) **B. G. LIPTÁK** (1995, 2003)

No industrial measurement is more important than the accurate detection of the flow rates of gases, liquids, and solids. In this section, an overview is given of the availability and characteristics of some of the most widely used flow sensors. In addition, emphasis is given to the latest developments, such as the polyphase (oil/water/gas) and the wide-rangeability dual-rotor turbine flowmeters. General guidelines are provided about selecting the best flow sensor for a particular application.

GETTING ORIENTED

Table 2.1a provides information on conversion factors among flow measurement units, whereas Table 2.1b summarizes the features and capabilities of more than 20 flow sensor families. The variety of choices that an application engineer faces is even greater, because nearly every flowmeter category can be further subdivided into a variety of distinctly different subcategories. For example, the positive-displacement type of flow sensors include rotary piston, oval gear, sliding vane, and reciprocating piston designs. If these subvariants are also counted, the number of flow sensors available for consideration is even higher.

The selection process should consist of at least two steps. First, identify the meters that are technically capable of performing the required measurement and are available in the required size and materials of construction. Once such a list has been developed, proceed to consider cost, delivery, performance, and other factors to arrive at the best selection.

When considering a particular application, we might use a yellow marker on a copy of Table 2.1b to highlight the nature of the process fluid, the purpose of the measurement, and the displays or transmission signals required. By this process, we are likely to eliminate from consideration about half of the flow sensors listed in the table.

After this first pass, concentrate on the performance requirements, such as the maximum error that can be tolerated (defined either as a percentage of actual reading or full scale) and the required metering range. Based on the error limits and range requirements, we can next determine the rangeability required for the particular application (the ratio of maximum and minimum flow limits within which the

TABLE 2.1a
Conversion of Volume or Flow Units

To Convert	*Into*	*Multiply by*
cubic feet	bushels (dry)	0.8036
cubic feet	cu. cm	28,320.0
cubic feet	cu. in.	1,728.0
cubic feet	cu. meters	0.02832
cubic feet	cu. yards	0.03704
cubic feet	gallons (U.S. liq.)	7.48052
cubic feet	liters	28.32
cubic feet	pints (U.S. liq.)	59.84
cubic feet	quarts (U.S. liq.)	29.92
cubic feet/min	cu. cm/sec	472.0
cubic feet/min	gallons/sec	0.1247
cubic feet/min	liters/sec	0.4720
cubic feet/min	pounds of water/min	62.43
cubic feet/sec	million gals/day	0.646317
cubic feet/sec	gallons/min	448.831
cubic meters	cu. Ft	35.31
cubic meters	cu. in.	61,023.0
cubic meters	cu. yards	1.308
cubic meters	gallons (U.S. liq.)	264.2
cubic meters	liters	1,000.0
cubic meters	pints (U.S. liq.)	2,113.0
cubic meters	quarts (U.S. liq.)	1,057.0
gallons	cu. cm	3,785.0
gallons	cu. ft	0.1337
gallons	cu. in.	231.0
gallons	cu. meters	3.785×10^{-3}
gallons	cu. yards	4.951×10^{-3}
gallons	liters	3.785
gallons (liq. Br. Imp.)	gallons (U.S. liq.)	1.20095
gallons (U.S.)	gallons (Imp.)	0.83267
gallons of water	pounds of water	8.3453
gallons/min	cu. ft/sec	2.228×10^{-3}
gallons/min	liters/sec	0.06308

© 2003 by Béla Lipták

TABLE 2.1a Continued
Conversion of Volume or Flow Units

To Convert	*Into*	*Multiply by*
gallons/min	cu. ft/hr	8.0208
kilograms	dynes	980,665.0
kilograms	grams	1,000.0
kilograms	poundals	70.93
kilograms	pounds	2.205
kilograms	tons (long)	9.842×10^{-4}
kilograms	tons (short)	1.102×10^{-3}
pounds	drams	256.0
pounds	dynes	44.4823×10^{4}
pounds	grains	7,000.0
pounds	grams	453.5924
pounds	kilograms	0.4536
pounds	ounces	16.0
pounds	ounces (troy)	14.5833
pounds	poundals	32.17
pounds	pounds (troy)	1.21528
pounds	tons (short)	0.0005

specified error limit must not be exceeded) and identify the flow sensor categories that can provide such rangeability.

After considering such key criteria as rangeability, it is appropriate to prepare a list of other requirements that might relate to installation, operation, or maintenance and, by referring to Tables 2.1b through 2.1e, check their availability. Usually, by the end of this process, the choice will have been narrowed to two or three designs.

Having narrowed the choices, the application engineer is advised to turn the pages of this handbook to the sections in which the selected flowmeter designs are discussed. At the beginning of each of these sections, a "feature summary" is provided, containing data on the limits on operating pressure and temperature, sizes, construction materials, costs, and other factors. The final selection is usually made by choosing the least expensive flow sensor that possesses all the features and characteristics needed for the application.

Special Requirements

To consider such special features as reverse flow, pulsating flow, response time, and so on, it is necessary to study the individual meter specifications in detail. Sometimes it is also necessary to obtain unpublished test data from the manufacturers.

Although the steps we have described will eliminate the technically unsuitable meters, it does not necessarily follow that a meter will always be found that is perfectly suited for a given application. For example, electromagnetic flowmeters are available for operating at pressures as high as 1500 PSIG (10.3×106 N/m^2). They are also available for flow rates as high as 500,000 GPM (31.5 m^3/sec), but they are not available to detect a flow rate of 500,000 GPM at 1500 PSIG.

The list of technically suitable meters will get shorter as the complexity of the application increases. For an application in which the flow of a highly corrosive and nonconductive sludge is to be measured, the list of acceptable sensors might consist of a single meter design (the cross-correlation type discussed later in this section). In contrast, on a straightforward clean-water application, the list will consist of most of the flow detectors listed in the orientation table (Table 2.1b).

In such cases, the engineer should narrow the choice by concentrating on the reasons for measuring the flow. We should ask if high accuracy is the most important or if the emphasis should be on long-term repeatability, low installed cost, or ease of maintenance. It should also be realized that certain flow detectors, such as those for the measurement of two-phase flow, are still in the developmental stage and are not readily available.[1–4]

In the following paragraphs, the features, characteristics, and limitations of some of the more widely used flow sensor categories will be briefly discussed. After that discussion, the important considerations of cost, accuracy, Reynolds number, safety, and installation requirements will be covered.

DIFFERENTIAL PRESSURE

The detection of pressure drop across a restriction is undoubtedly the most widely used method of industrial flow measurement. The pressure decrease that results from a flowing stream passing through a restriction is proportional to the flow rate and to fluid density. Therefore, if the density is constant (or if it is measured and we correct for its variations), the pressure drop can be interpreted into a reading of flow. This relationship is described by the following formula:

$$Q(\text{flow}) = K(\text{constant})\sqrt{\frac{h(\text{differential head})}{d(\text{fluid density})}} \qquad \textbf{2.1(1)}$$

Differential-pressure (d/p) meters have the advantage of being the most familiar meter type. They are widely used to measure the flow of both gases and liquids, including viscous and corrosive fluids. Their advantages include the lack of moving parts and a suitability for practically all flow rates in a wide variety of pipes and tubes.

All differential-pressure meters exhibit a square-law relationship between the generated head and flow rate, which severely limits their rangeability (typically 3:1, with 4:1 being the maximum). Another disadvantage of d/p type flowmeters is that, in addition to the sensor element, several other components are needed to make a measurement. These include not only the readout or transmitter but also a three-valve manifold and fittings to attach the readout or transmitter

© 2003 by Béla Lipták

TABLE 2.1b

Orientation Table for Selecting the Right Flow Sensors

Type of Design	Applicable to Detect the Flow of: Clean Liquids	Viscous Liquids	Slurry	Gas	Solids	Direct Mass–Flow Sensor	Volumetric Flow Detector	Flow Rate Sensor	Inherent Totalizer	Direct Indicator	Transmitter Available	Linear Output	Rangeability	Pressure Loss Thru Sensor	Approx. Straight Pipe-Run requirement Upstream Diam./Downstream Diam.)	Accuracy * ± % Full Scale ** ± % Rate *** ± % Registration	FLOW RANGE
Elbow Taps	✓	L	L	✓			✓	✓			✓	SR	3:1[9]	N	[7]25/10	5–10*	gpm—m^3/hr; SCFM—Sm^3/hr
Jet Deflection				✓			✓	✓			✓	✓	25:1	N	[7]20/5	2*	SCFM—Sm^3/hr
Laminar Flowmeters	✓	✓		✓			✓	✓			✓	✓	10:1	H	15/5	$^1/_2$–5*[10]	gpm—m^3/hr; SCFM—Sm^3/hr
Magnetic Flowmeters	✓[5]	✓[5]	✓[5]				✓	✓			✓	✓	10:1[9]	H	5/3	$^1/_2$**–2*	gpm—m^3/hr
Mass Flowmeters, Misc.	✓	✓	✓	✓		✓	✓	✓	SD	SD	✓	✓	100:1	A	N	$^1/_2$**	lbm/hr–kgm/hr
Coriolis	✓	✓	L	✓	SD	✓	✓	✓	SD	SD	✓	✓	20:1	H	N	0.15–$^1/_2$**	SCFM—Sm^3/hr
Metering Pumps	✓	✓	✓				✓		✓		SD	✓	20:1	–	N	$^1/_{10}$–1*	gpm—m^3/hr
Orifice (Plate or Integral Cell)	✓	L	L	✓			✓	✓			✓	SR	3:1[9]	H	[7]20/5	$^1/_2$**–2*	gpm—m^3/hr; SCFM—Sm^3/hr
Pitot Tubes	✓		L	✓			✓	✓			✓	SR	3:1[9]	M	[7]30/5	0.5–5*	gpm—m^3/hr; SCFM—Sm^3/hr
Positive Displacement Gas Meters				✓			✓		✓	✓	SD	✓	10:1 to 200:1	M	N	$^1/_2$–1***	SCFM—Sm^3/hr

© 2003 by Béla Lipták

Positive Displacement Liquid Meters	✓	✓					✓		✓	✓	SD	✓	10:1⑨	H	N	0.1–2**	gpm—m^3/hr
Segmental Wedge	✓	✓	✓				✓	✓			✓	SR	3:1	M	15/5	3**	gpm—m^3/hr
Solids Flowmeters		SD	SD		✓	SD	SD	✓	✓	SD	✓	✓	20:1	—	5/3	$^1/_2$**–4*	lbm/hr–kgm/hr
Target Meters	✓	✓	L	✓			✓	✓		SD	✓	SR	4:1	H	20/5	0.5*–5*	gpm—m^3/hr SCFM—Sm^3/hr
Thermal Meters (Mass Flow)	✓	L	L	✓		✓		✓			✓	L	20:1⑨	A	5/3	1–2*	gpm—m^3/hr SCFM—Sm^3/hr
Turbine Flowmeters (Dual Turbine)	✓	L		SD			✓	✓			✓	✓	10:1 (>100:1)	H	15/5⑦	$^1/_4$**	gpm—m^3/hr SCFM—Sm^3/hr
V-Cone Flowmeter	✓	L	L	✓			✓	✓			✓	SR	3:1②	M	2/5	$^1/_2$–2**	gpm—m^3/hr ACFM—Sm^3/hr
Ultrasonic Flowmeters Transit Doppler	 ✓	 L L	 ✓	 L	 L	 	 ✓ ✓	 ✓ ✓	 	 	 ✓ ✓	 ✓ ✓	 20:1 10:1	 N N	 ⑦15/5 ⑦15/5	 1**–2* 2–3*	gpm—m^3/hr③ SCFM—Sm^3/hr
Variable–Area Flowmeters (Dual float)	✓	L	L	✓			✓	✓		✓	✓	✓	5:1 (to 20:1)	A	N	$^1/_2$*–10**	gpm—m^3/hr SCFM—Sm^3/hr
Venturi Tubes Flow Nozzles	✓	L	L L	✓ ✓			✓ ✓	✓ ✓			✓ ✓	SR SR	3:1② 3:1②	M H	⑦15/5 ⑦20/5	$^1/_2$**–1* 1**–2*	gpm—m^3/hr③ SCFM—Sm^3/hr
Vortex Shedding Fluidic Oscillating	✓ ✓ ✓			✓			✓ ✓ ✓	✓ ✓ ✓			✓ ✓ ✓	✓ ✓ ✓	10:1⑧ 20:1⑧ 10:1⑧	H H H	20/5 20/5 20/5	0.5–1.5** 1–2** 0–5*	gpm—m^3/hr ACFM—Sm^3/hr
Weirs, Flumes	✓	L	L				✓	✓			✓	SD	100:1	M	See Text	2–5*	gpm—m^3/hr③

----- = Non-standard Range
L = Limited
SD = Some Designs
H = High
A = Average
M = Minimal
N = None
SR = Square Root
① = The data in this column is for general guidance only.
② = Inherent rangeability of primary device is substantially greater than shown. Value used reflects limitation of differential pressure sensing device, when 1% of actual flow of accuracy is desired. With multiple-range intelligent transmitters the rangeability can reach 10:1.
③ = Pipe size establishes the upper limit.
④ = Practically unlimited with the probe type design.
⑤ = Must be conductive.
⑥ = Can be re-ranged over 100:1.
⑦ = Varies with upstream disturbance.
⑧ = Can be more at high Re. No. services.
⑨ = Up to 100:1 with high-precision design.
⑩ = Commercially available gas flow elements can be 1% of rate.
⑪ = More for gas turbine meters.

© 2003 by Béla Lipták

TABLE 2.1c
Flowmeter Selection for Metering a Variety of Fluids

	Meter Type / Fluid Details	Correlation	Elbow Taps	Laminar	Electro-Magnetic	Angular Momentum	Metering Pumps	Orifice	Pitot	Gas Displacement	Liquid Displacement	Solids Flowmeter	Target	Thermal	Liquid Turbine	Gas Turbine	Doppler U-Sonic	Transit U-Sonic	V.A.	Venturi	Vortex Shedding	Vortex Precession	Fluidic Oscillation
Liquid	Clean	X	✓	✓	*✓	✓	✓	✓	✓	X	✓	X	✓	✓	✓	X	X	✓	✓	✓	✓	X	✓
	Dirty	✓	?	✓	*✓	✓	✓	?	?	X	X	?	✓	✓	?	X	✓	?	✓	✓	?	X	?
	Slurries	✓	X	?	*✓	?	✓	X	X	X	X	SD	?	?	X	X	?	X	X	?	X	X	X
	Low Viscosity	✓	✓	✓	*✓	✓	✓	✓	✓	X	?	X	✓	✓	✓	X	✓	✓	✓	✓	✓	X	✓
	High Viscosity	✓	?	?	*✓	?	✓	?	X	X	✓	SD	?	?	X	X	?	?	?	?	X	X	X
	Corrosive	✓	✓	?	*✓	✓	?	✓	✓	X	?	X	?	?	?	X	✓	✓	✓	?	?	X	?
	Very Corrosive	✓	?	X	*✓	X	X	?	?	X	X	X	X	?	X	X	✓	✓	✓	X	X	X	X
Gas	Low Pressure	X	✓	✓	X	✓	X	✓	✓	✓	X	X	✓	✓	X	✓	X	X	✓	✓	✓	✓	X
	High Pressure	X	✓	✓	X	✓	X	✓	✓	✓	X	X	✓	✓	X	✓	X	X	X	✓	✓	✓	X
	Steam	X	X	?	X	X	X	✓	X	X	X	X	✓	X	X	SD	X	X	✓	✓	SD	X	X
	Reverse Flow	X	✓	X	✓	X	X	SD	X	X	X	X	X	X	SD	SD	✓	✓	X	X	X	X	X
	Pulsating Flow	?	X	✓	✓	X	X	?	X	X	X	X	X	X	X	X	✓	✓	?	?	X	X	X

* = Must be electrically conductive
✓ = Generally suitable
? = Worth consideration
X = Not suitable
SD = Some design

to the sensor. As a result, the installation is time consuming and, as a result of the many tube or pipe joints, it requires relatively high maintenance to eliminate leakage.

Reynolds Number

If the Reynolds number (Re) and flow rate are both constant, the output signal of a head-type flowmeter will also be constant. However, if the Re changes, that will also change the meter reading, even at constant flow. Therefore, it is recommended to calculate the Reynolds numbers at both maximum and minimum flows and check whether the corresponding change in flow coefficients is within the acceptable error. If it is not, a different type of sensor must be selected, such as the quadrant-edged orifice for low-Reynolds-number applications or a flowmeter type that is insensitive to Reynolds variations, such as the magnetic meter.

Figure 2.1f depicts the relationship between the pipeline Reynolds number and the discharge coefficients of various head-type flow elements. The Reynolds number can be calculated by the following equation:

$$\mathrm{Re} = \frac{3.160 G_f Q_f}{D\mu} \qquad \textbf{2.1(2)}$$

where

G_f = process fluid specific gravity (at 60°F, or 15.5°C)
Q_f = liquid flow in GPM
D = pipe inside diameter (in inches)
μ = viscosity of the process fluid (in centipoise)

As shown by Figure 2.1f, the orifice plate discharge coefficient is constant within ±0.5% over a Reynolds number range of 2×10^4 to 10^6. The discharge coefficient being constant guarantees that no measurement errors will be caused by Reynolds number variations within this range. On the other hand, if, at minimum flow, the Reynolds number would drop below 20,000, that would cause a substantial increase in the discharge coefficient of the meter and a corresponding error

© 2003 by Béla Lipták

TABLE 2.1d
*Flowmeter Selection Table**

	Clean Liquids	Dirty Liquids	Corrosive Liquids	Viscous Liquids	Abrasive Slurries	Fibrous Slurries	Low Velocity Flows	Vapor or Gas	Hi Temp. Service	Cryogenic Service	Semi-Filled Pipes	Non-Newtonians	Open Channel
Differential Pressure													
Orifice	✓	??	?	?	X	X	✓	✓	✓	✓	X	??	X
Venturi	✓	?	??	??	??	??	??	✓	??	??	X	??	X
Flow Nozzles and Tubes	✓	??	??	??	??	??	??	✓	??	??	X	??	X
Pitot Tubes	✓	??	?	??	X	X	??	✓	??	??	X	X	X
Elbow	✓	?	?	??	?	??	X	✓	??	??	X	??	X
Magnetic	✓	✓	✓	?	✓	✓	?	X	??	X	??	?	??
Mass													
Coriolis	✓	✓	?	✓	✓	?	?	??	??	??	X	✓	X
Thermal	??	??	??	??	??	??	?	✓	??	X	X	??	X
Oscillatory													
Vortex Shedding	✓	?	?	??	X	X	X	✓	??	??	X	X	X
Fluidic	✓	??	?	??	X	X	X	X	??	??	X	X	X
Vortex Precession	✓	X	??	??	X	X	X	✓	??	X	X	X	X
Positive Displacement	✓	X	??	✓	X	X	✓	✓	??	??	X	X	X
Target	✓	?	?	?	??	X	??	✓	??	??	X	??	X
Turbine	✓	??	??	?	X	X	??	✓	??	??	X	X	?
Ultrasonic													
Transit Time	✓	??	??	??	X	X	??	??	X	??	X	X	?
Doppler	X	✓	??	??	??	??	??	X	X	X	X	??	X
Variable Area	✓	?	?	?	X	X	??	✓	?	X	X	X	X
Weirs and Flumes	✓	?	??	X	??	??	?	X	X	X	✓	X	✓

✓Designed for this service
?? Applicable for the service under certain conditions, consult manufacturer
? Normally applicable for this service
X Not applicable for this service
*Courtesy of Fischer & Porter, which today is new ABB Process Automation.

in the measurement. Therefore, it is advisable to limit the use of orifice plates to applications where the Reynolds number stays above 20,000 throughout the flow range.

Energy Costs

In larger pipes or ducts, the yearly energy operating cost of d/p-type flowmeters can exceed the purchase price of the meter. The permanent pressure loss through a flowmeter is usually expressed in units of velocity heads. The velocity head is calculated as $v^2/2g$, where v is the flowing velocity and g is the gravitational acceleration (9.819 m/sec^2 or 32.215 ft/sec^2 at 60° latitude).

Therefore, the velocity head at, say, a flowing velocity of 10 ft/sec is calculated (in the English units) as $10^2/64.4 = 1.55$ ft of the flowing fluid. If the flowing velocity is 3 m/sec, the velocity head is calculated (in the metric units) as $32/19.64 = 0.46$ m of the flowing fluid. The velocity head is converted into pressure drop by multiplying it with the specific gravity of the flowing fluid. As shown in Table 2.1g, the different flowmeter designs require different pressure drops for their operation.

One can calculate the yearly operating cost of any flow measurement installation by using the following formula:

$$\$/\text{yr} = C(\$/\text{KWH})(OT)(dP)(F)(SpG)/(\%) \qquad \textbf{2.1(3)}$$

where

C = a correction factor for the units used ($C = 1.65$ if the flow is in GPM and the pressure loss is in feet)
\$/KWH = unit cost of electricity in the area
OT = operating time of the meter (1.0 if operated continuously)
dP = pressure loss in velocity heads in the particular meter (units are feet or meters)
F = flow rate (units are in GPM or m^3/sec)
SpG = specific gravity of the flowing fluid (water = 1.0)
% = efficiency of the pump (or compressor) expressed as a fraction (70% = 0.7)

Example Let us calculate the yearly cost of operation if an orifice sized for 100-in. H_2O pressure drop ($dP = 8.333$ ft =

© 2003 by Béla Lipták

TABLE 2.1e
*Flowmeter Selection Table**

Flowmeter	Pipe size, in (mm)	Gases (vapors)		Liquids						Temperature, °F (°C)	Pressure, PSIG (kPa)	Accuracy, uncalibrated (including transmitter)	Reynolds number† or Viscosity
								Slurries					
		Clean	Dirty	Clean	Viscous	Dirty	Corrosive	Fibrous	Abrasive				
SQUARE ROOT SCALE. MAXIMUM SINGLE RANGE 4:1													
Orifice													
Square-edged	>1.5 (40)	✓	X	✓	X	?	?	X	X	Process temperature to 1000°F (540°C); transmitter limited to −30–250°F(−30–120°C)	To 4000 PSIG (41,000 kPa)	±1–2% URV	R_D > 2000
Honed meter run	0.5–1.5 (12–40)	✓	X	✓	?	X	?	X	X			±1% URV	R_D > 1000
Integral	<0.5(12)	✓	X	✓	✓	X	?	X	X			±2–5% URV	R_D > 100
Quadrant/conic edge	>1.5(40)	X	X	✓	✓	?	?	X	X			±2% URV	R_D > 200
Eccentric	>2(50)	?	✓	?	X	✓	?	X	X			±2% URV	R_D > 10,000
Segmental	>4(100)	?	✓	?	X	✓	?	X	X			±2% URV	R_D > 10,000
Annular	>4(100)	?	✓	?	X	✓	?	X	X			±2% URV	R_D > 10,000
Target	0.5–4 (12–100)	✓	✓	✓	✓	✓	?	X	X			±1.5–5% URV	R_D > 100
Venturi	>2(50)	✓	?	✓	?	?	?	?	?			±1–±2% URV	R_D > 75,000
Flow nozzle	>2(50)	✓	?	✓	?	?	?	X	X			±1–±2% URV	R_D > 10,000
Low loss	>3(75)	✓	X	✓	X	X	✓	X	X			±1.25% URV	R_D > 12,800
Pitot	>3(75)	✓	X	✓	?	X	?	X	X			±5% URV	No limit
Annubar	>1(25)	✓	X	✓	X	X	?	X	X			±1.25% URV	R_D > 10,000†
Elbow	>2(50)	✓	?	✓	X	?	?	?	?			±4.25% URV	R_D > 10,000†

© 2003 by Béla Lipták

LINEAR SCALE TYPICAL RANGE 10:1

Magnetic	0.1–72 (2.5–1800)	X	X	✓	✓	✓	✓	✓	✓	360 (180)	≤1500 (10,800)	±0.5% of rate to ±1% URV	No limit
Positive-displacement	<12 (300)	✓	X	✓	X	X	?	X	X	Gases: 250 (120) Liquids: 600 (315)	≤1400 (10,000)	Gases: ±1% URV Liquids: ±0.5% of rate	≤8000 cS
Turbine (Dual turbine)	0.25–24 (6–600)	✓	X	✓	X	X	?	X	X	–450–500 (–268–260)	≤3000 (21,000)	Gases: ±0.5% of rate Liquids ±1% of rate (±0.1% of rate over 100:1 range)	≤2–15 cS
Ultrasonic Time-of-flight	>0.5 (12)	X	X	✓	?	X	✓	X	X	–300–500 (–180–260)	Pipe rating	±1% of rate to ±5% URV	No limit
Doppler	>0.5 (12)	X	X	X	?	✓	✓	✓	✓	–300–250 (–180–120)	Pipe rating	±5% URV	No limit
Variable-area (Dual float)	≤3 (75)	✓	X	✓	✓	X	?	X	X	Glass: ≤400 (200) Metal: ≤1000 (540)	Glass: 350 (2400) Metal: 720 (5000)	±0.5% of rate to ±1% URV (up to 20:1 range)	<100 cS
Vortex	1.5–16 (40–400)	✓	?	✓	X	?	?	X	X	≤400 (200)	≤1500 (10,500)	±0.75–1.5% of rate	R_D >10,000

cS = centiStokes
URV = Upper range value
✓ = Designed for this application
? = Normally applicable
X = Not applicable
*This material is reproduced by permission of McGraw-Hill, Inc., from R. W. Miller's *Flow Measurement Handbook*, 2nd edition, 1989.
†According to other sources, the minimum Reynolds number should be much higher.

© 2003 by Béla Lipták

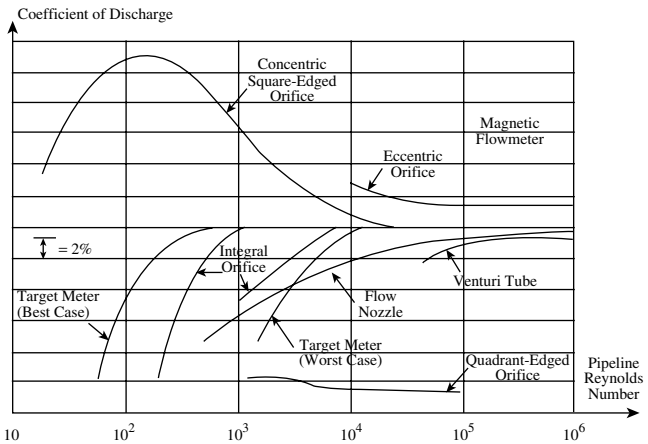

FIG. 2.1f
Discharge coefficients as a function of sensor type and Reynolds number. (Courtesy of The Foxboro Co.)

TABLE 2.1g
Velocity Head Requirements of the Different Flowmeter Designs

Flowmeter Type	*Permanent Pressure Loss (in Velocity Heads)*
Orifice plates	Over 4
Vortex shedding	Approximately 2
Positive displacement	1 to 1.5
Turbine flowmeter	0.5 to 1.5
Flow tubes	Under 0.5

3.6 PSID) in a 16-in. schedule 40 steel pipe is measuring the flow of 5000 GPM of water flow. The meter is operating continuously ($OT = 1.0$), the cost of electricity is \$0.1/kWh, and the pump efficiency is 60% (% = 0.6).

$$\$/\text{yr} = 1.65(0.1)\ (1.0)\ (8.333)\ (5000)\ (1.0)/0.6$$
$$= \$11{,}457 \text{ per year} \qquad \textbf{2.1(4)}$$

If the cost of electricity is \$0.1/kWh and the pumping efficiency is 60%, the operating cost of any continuous pressure drop in any water pumping system can be calculated as

$$\$/\text{yr} = 0.635\ (\text{GPM})\ (\text{PSID}) \qquad \textbf{2.1(5)}$$

Therefore, when selecting a flowmeter, we should consider not only the purchase and installation costs but also the operating cost during the life of the flowmeter. As was shown above, a major component of the operating cost of flowmeters is their pumping (or compressor operating) energy costs.

In the following paragraphs, the main advantages and disadvantages of the large family of d/p measurement-based flow sensors (Figure 2.1h), this most widely used flowmeter category will be discussed. The discussion here will be limited to the highlights of sensor features. For an in-depth discussion of their features and characteristics, the reader should turn to the appropriate section in this chapter that is devoted to the particular design.

Orifice Plates

Orifice plates are the simplest and least expensive flow element within the d/p-type sensors. The total installed cost is relatively independent of pipe diameter, because the cost of the piping manifold and the differential-pressure readout or transmitter are unaffected by pipe size and are relatively constant. Consequently, the orifice-type installations are relatively expensive in smaller pipe sizes and rather economical in pipe sizes over 6 in. (150 mm).

Orifices can be used in a wide range of applications, because these plates are available in a variety of materials and in many designs, such as concentric, segmental, or eccentric. Another advantage is that the orifice plate can be badly worn or damaged, yet it will still provide a reasonably repeatable output, albeit significantly inaccurate. Another very convenient feature of the orifice-type installation is the ability to service or replace the readout or transmitter without the need to remove the orifice or to interrupt the process flow.

The main disadvantages are the low accuracy[5] (Figure 2.1i) and low rangeability of standard orifices, although substantial improvements been reported (error under 1% of actual flow over a 10:1 range) when intelligent and multirange d/p cells are used. Other disadvantages of orifice-type installations include the high irrecoverable pressure loss (40 to 80% of the generated head) and the deterioration in both measurement accuracy and in long-term repeatability as the edge wears or as deposits build up. High maintenance is another disadvantage in installations where manifold leakage or pressure tap plugging are likely.

Orifice-type flow measurement has been modified, and new, special-purpose devices have been introduced to meet particular process requirements. One such unique design is the annular orifice used to measure the hot and dirty gases in the steel industry. Here, the process flow passes through an annular opening between the pipe and a disk-shaped, concentrically located plate, and the pressure difference is detected between the upstream and downstream faces of that disk. This design is shown in the section on target meters.

For paper pulp or slurry flow detection, the segmental and eccentric orifices (Section 2.15), venturi cones (Section 2.28) and the segmental wedge elements (Section 2.21) have been developed. The venturi cone is shaped as a restriction in the center of the flow path, forcing the flowing stream into an annular space between the cone and the pipe. The segmental wedge element restricts the flow passage, because the top of the pipe is indented. These sensors are all used on dirty fluids or fluids at higher temperatures.

Venturi Tubes and Nozzles

The shapes of these tubes and nozzles have been obtained with the goal of minimizing the pressure drop across them. These tubes are often installed to reduce the size of (and therefore capital expenditures on) pumping equipment and to save on pumping energy costs. In contrast with the sharp-edged

© 2003 by Béla Lipták

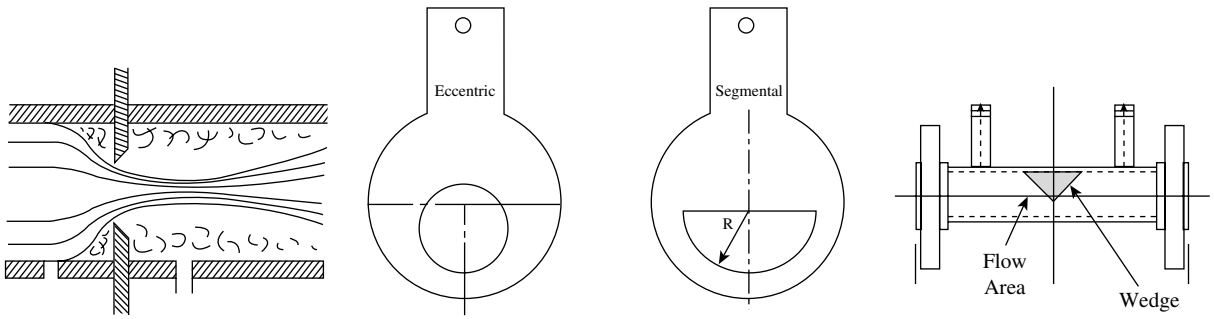

a) Sharp-edged, eccentric, segmental orifice and wedge designs

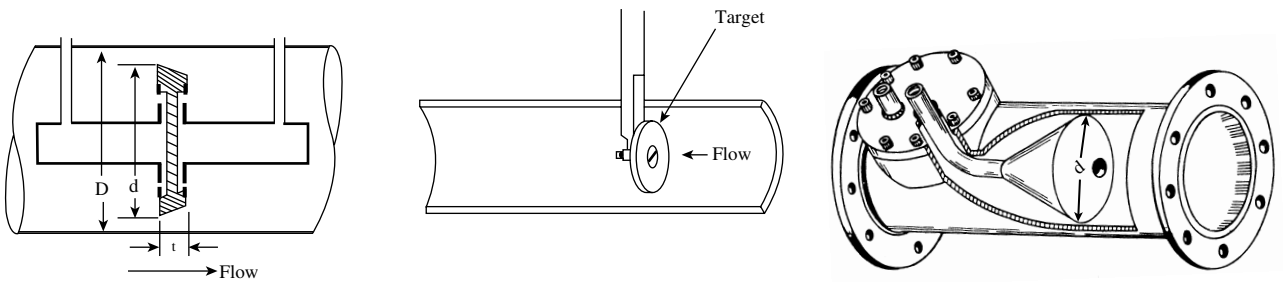

b) Annular, target and V-cone designs

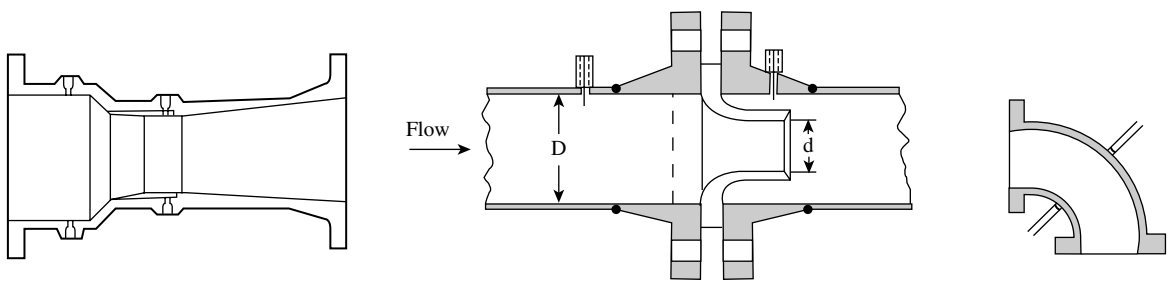

c) Venturi tube, flow nozzle and elbow tap designs

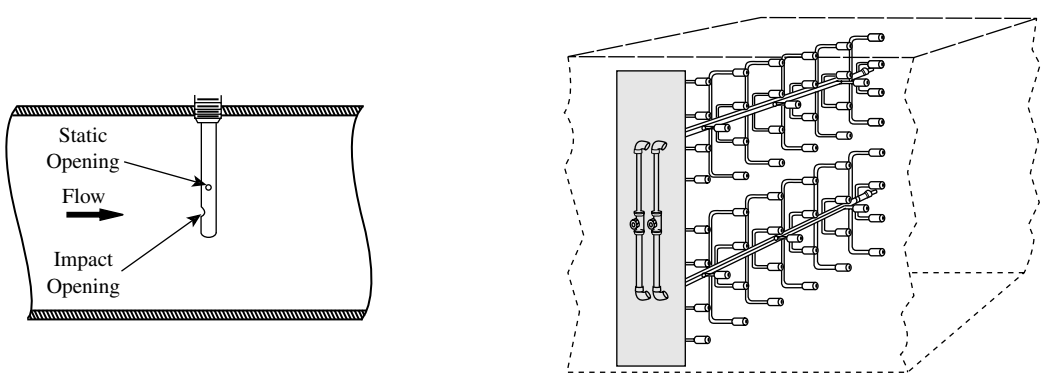

d) Conventional and area-averaging pitot tube designs

FIG. 2.1h
Pressure difference producing flowmeter designs.

© 2003 by Béla Lipták

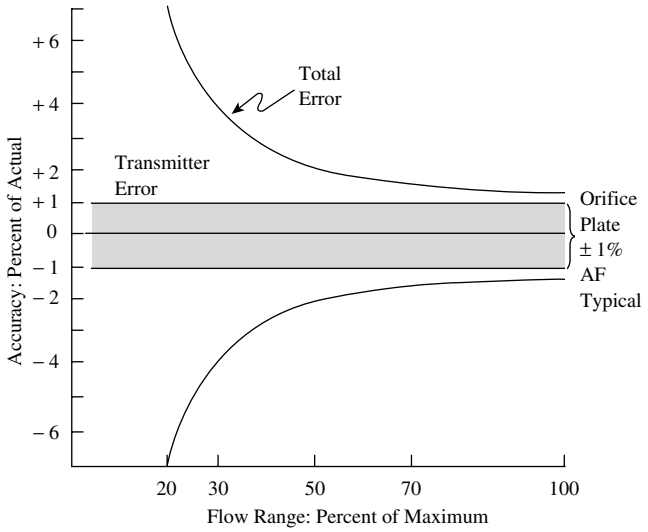

FIG. 2.1i
Total error of an orifice type flow measurement, using a ±1/2% full-scale d/p cell, is shown as a function of actual flow.

orifice, these tubes and nozzles are resistant to abrasion and can also be used to measure the flow of dirty fluids and slurries. They are, however, considerably larger, heavier, and more expensive than the orifice plate. Their installation is also more difficult.

Flow nozzles represent a transition between orifices and flow tubes. They are less expensive, but they produce more head loss than do the flow tubes.

Sonic Venturi Meters

A flowmeter with very high rangeability can be obtained when the venturi tubes are inserted into a multiport digital control valve (illustrated in Figure 2.1j) in which the area of each port is twice the size of the next smaller one. The on/off ports are opened through binary manipulation and, therefore, the meter rangeability is a function of the number of ports used. With 8 ports, the rangeability is 255:1; with 10, it is 1023:1; with 12 it is 4095:1; and so on. The digital control valve is converted into a flowmeter by inserting a sonic velocity venturi into each of the ports. A sonic velocity venturi element passes a known and constant flow rate when the flow velocity at its throat reaches sonic velocity. Therefore, this flowmeter requires that the meter pressure drop continuously exceed 40% of the absolute upstream pressure to guarantee the continuous presence of sonic velocity of the throat of the venturi tubes. Because of the inherent requirement for this high pressure drop, this meter is ideal for applications in which it is desirable to lower pressure as well as to measure the flow.

The accuracy of the sonic venturi is 1/2 to 1% of actual flow throughout the meter range. With the addition of inlet gas pressure, temperature, and/or density sensors, it can be converted for mass flow measurement. The sonic venturi can also meter the flow of liquids. This flowmeter is available in sizes from 1 to 8 in. (25 to 200 mm). Units have been built

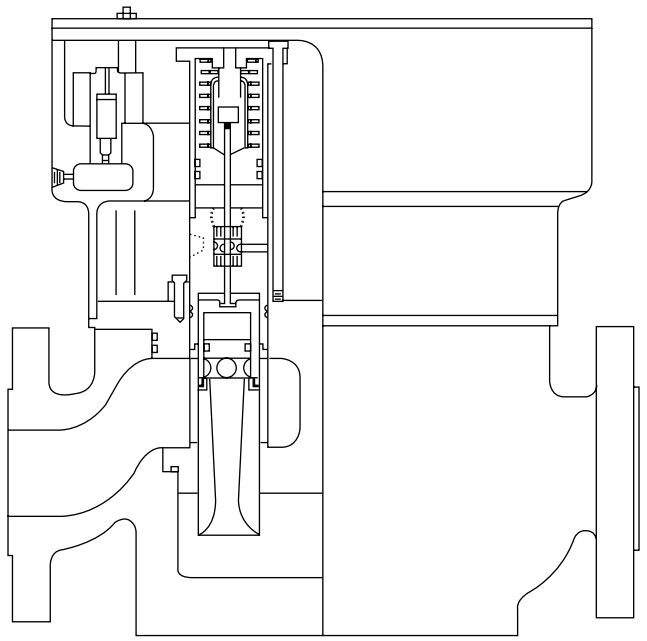

FIG. 2.1j
Sonic venturi digital flowmeter featuring extremely wide rangeability.

for up to 10,000 PSIG (69 MPa) pressure services and for temperatures from cryogenic to 1200°F (650°C).

Pitot Tubes

A pitot tube is a small, open-ended tube, that is inserted into the process pipe with its open end facing into the flow. The differential between the total pressure on this open impact port and the static pipeline pressure is measured as an indication of flow. For the measurement of large flows, the pitot-tube-type sensors provide a very low-cost measuring system with negligible pressure loss. They are also convenient for temporary measurements and for traversing pipes and ducts to obtain their velocity profiles. Their principal limitation is that they measure the flowing velocity at only one point and therefore, even after calibration, they will be in error every time the velocity profile changes. Therefore, they are used only when low-accuracy volumetric readings are acceptable, such as in HVAC applications. They are also subject to plugging and therefore require substantial maintenance.

To reduce the effect of velocity profile changes and thereby improve the measurement accuracy, multiple-opening pitot tubes and area-averaging pitot traverse stations have also been developed.

Elbow Taps

Elbow taps measure the flow rate by detecting the differential pressure between taps located on the inner and outer radii of an elbow. In larger pipes, this results in a very low-cost installation, because pipe size does not affect cost. This is a crude, inaccurate measurement, requiring high flow velocities and long upstream, straight pipe lengths.

© 2003 by Béla Lipták

Target (or Impact) Meters

In a target flowmeter, a target or impact plate is inserted into the flowing stream, and the resulting impact force is detected electronically or pneumatically as an indication of flow. The target meter installations are more expensive than orifices but because (in case of the target design) there are no pressure taps to plug, they are better suited for applications in which the process fluid is "sticky" or contains suspended solids. The other advantage is that they have no moving parts. Their accuracy and rangeability (3:1) are low, but they can be reranged.

ELECTROMAGNETIC METERS

Magnetic flowmeters operate in accordance with Faraday's law, because these meters measure the velocity of electrically conductive liquids as they cut the magnetic fields that are maintained across these metering tubes. The main advantages of magnetic flowmeters include their completely unobstructed bore and their lack of moving parts. Because of these features, they introduce no pressure loss and experience no wear and tear on their components. Other advantages include their chemical compatibility with virtually all liquids; indifference to viscosity, pressure, temperature, and density variations; ability to provide linear analog outputs and to measure bidirectional flows; availability in a wide range of sizes; and ease and speed of reranging on site.

Their major limitation is that they can be used only on electrically conducive fluids. (This requirement eliminates their use on all gases and on most hydrocarbon fluids.) Another disadvantage is their high purchase price and the cost of maintaining the magnetic field. To locate the flow tube in an explosion-proof area, the converter and power supply must be remotely located, and intrinsic safety barriers must be installed between them and the tube.

Electromagnetic flowmeters are often recommended for applications involving corrosive aqueous liquids and slurries. In their more recent designs, the magnetic flowmeter probes are provided with electrode cleaners, and the magnetic field is cycled so as to conserve electric energy and to allow automatic rezeroing, which guarantees better accuracy. The use of ceramic flowtubes has reduced their costs while eliminating electrode leakage, because the sintered electrodes cannot leak. The addition of intelligence through digital chips has allowed double-range operation, increased turndown, guaranteed the detection of empty pipes, and reduced the measurement error to within 0.5% of actual flow over a 10:1 range.

TURBINE METERS

In turbine meters, a digital output is generated, which is linear with the process flow, as the speed of rotation of the turbine is measured. Turbine meters can be used in both liquids and gases, and they are suitable for the measurement of both very low and very high flow rates, as insertion designs. The liquid turbine meter is one of the most accurate meters available for low- to medium-viscosity products. Rangeability of single turbine meters is around 10:1, for dual-turbine meters, it exceeds 100:1. Turbine meters can be used under practically any pressure and for applications involving extremely high and low temperatures. They are easy to install and, relative to the pipe diameter, are also small in size and weight. The meter provides a very fast response speed and is suitable for hygienic applications.

Their principal limitations include high cost, incompatibility with viscous or dirty liquids, and the potential for being damaged by over-speeding if slugs of gas or vapor are sent through the liquid meter. The installation of upstream filters is often recommended, in spite of the fact that it increases both the pressure drop and the maintenance requirement of the installation.

Turbine meters are widely used when high-accuracy measurements are required in applications involving product sales. They are also used when high accuracy is required in blending, on test rig duty, and in general measurement. Variations on the basic turbine flowmeter design include nonelectric (fiber optic) detectors; turbine probes; bearingless "hover-flow" designs; and various paddlewheel, impeller, and shunt-flow designs. The impeller and paddle-flow designs cost less but also provide less accuracy than traditional turbine flowmeters.

VORTEX METERS

While fishing in Transylvania, Theodore von Kármán noticed that, downstream of the rocks, the distance between the shed vortices was constant, regardless of flow velocity. From that observation evolved the three types of vortex meters: the vortex shedding, the vortex precession, and the fluidic oscillation versions. All three types detect fluid oscillation. They have no moving components and can measure the flow of gas, steam, or liquid. Their advantages include good accuracy and repeatability, high rangeability, low maintenance, and the ability to provide either frequency or linear analog outputs.

Vortex flowmeters cannot be used to measure the flow of viscous or dirty process fluids. These flowmeters are also limited to sizes under 12 in. (300 mm), because the frequency of fluid oscillation drops off as the line size increases. The other limitation is that vortices do not form at Reynolds numbers below 10,000; therefore, this meter cannot be used in low-Reynolds-number applications.

Vortex shedding meters can be general-purpose, economically competitive alternatives to the orifice plate, and they are also used in many more demanding applications because of their superior accuracy and rangeability.

VARIABLE-AREA METERS

Variable-area meters are widely used for applications in which small flow rates are to be measured or where local indication is required. They are also common in purge meter installations, test rigs, and general industry. Variable-area meters are available in both glass and metal tube construction.

© 2003 by Béla Lipták

In the glass tube design, the position of the float can be visually observed as an indication of flow rate.

The main advantage of the glass tube design is its self-contained nature, which eliminates the need for power supplies. Other advantages include their low cost, low pressure loss, direct flow indication, and the ability to detect very low flow rates of both gases or liquids, including viscous fluids.

The limitations of all variable-area meters include the need for vertical mounting and that they are available only in smaller sizes. The disadvantages of the glass tube design also include its low accuracy, the limited availability of transmitters, and the design's relatively low pressure ratings.

The metallic tube units are readily available as transmitters and can be obtained in larger sizes, with higher pressure ratings. They provide good rangeability (5:1) and a linear output, but they, too, are limited to use with clean fluids and must be mounted vertically.

A wide variety of the types of designs exist in which gravity has been replaced by spring loading. In these units, an increase in flow results in a compression or deflection of a spring, and this motion is used to operate the display. These units can be mounted in any position, including horizontally, as flow-through pipeline devices.

POSITIVE-DISPLACEMENT METERS

Positive-displacement (PD) meters are often used when accurate quantities need to be delivered, either for reasons of recipe formulation in batch processes or for accounting purposes during sales. The PD meters trap a fixed volume of fluid and transfer it from the inlet to the outlet side of the meter. The number of such calibrated "packages" of fluid is counted as a measure of volumetric flow. Design variations include the rotary piston, oval gear, sliding vane, and reciprocating piston types.

Liquid PD meters offer good accuracy and rangeability (>10:1) and are particularly suited to measure the flow of high-viscosity fluids. These meters provide local readouts and do not require a power supply. When operated as a transmitter, the PD meter's output signal is linear with flow.

The PD meter applications are limited to clean fluids, because their operation depends on close meshing surfaces. Another disadvantage of PD meters is that they require regular recalibration and maintenance, particularly when used to measure the flow of nonlubricating liquids. Another disadvantage is that they are bulky and heavy. Their installed cost is high because, in addition to block and bypass valves, they also require filters and air releases for proper operation.

ULTRASONIC METERS

Ultrasonic meters are ideally suited to measure the flow of very corrosive liquids. They are available in two forms: Doppler and transit-time version.

In case of the Doppler meters, an ultrasonic pulse is beamed into the pipe and is reflected by inclusions such as air or dirt. The Doppler meter is frequently used in a "clamp-on" design, which can be attached to the outside of existing pipelines. It detects the flowing velocity only in a small area where the sonic beam enters the flowing stream. Therefore, if that velocity is not representative of the full cross section of the pipe, the measurement accuracy will be poor. Its main advantage is its low cost, which does not increase with pipe size. Its main limitation is that it is not suitable for the measurement of clean fluids or clean gases.

The transit-time type ultrasonic flowmeters are often found in water treatment and chemical plant applications. Here, single or multiple ultrasonic beams are sent at an acute angle across the flowing stream, first in the same direction as the flow and then in the opposite direction. Flow rate is detected as the difference in transit times. This type of ultrasonic meter is considerably more expensive than the Doppler version, but it offers better accuracy. Unlike the Doppler meter, it is usable only on relatively clean fluid applications. Its advantages include that it introduces no restriction or obstruction to flow, so its pressure drop is low. One limitation is that its performance is a function of the piping configuration, and it requires fairly substantial upstream, straight runs (about 15 pipe diameters).

METERING PUMPS

Metering pumps serve the purposes of both pumping and metering. They usually are used to accurately charge relatively small quantities of clean fluids. Their two basic design variations are the plunger and diaphragm versions. The plunger pump provides better accuracy, whereas the diaphragm type is preferred for dangerous or contaminated fluid services. Their advantages include that they are self-contained, easy to install, and generally provide good accuracy. Metering pump performance is a function of both the process fluid (which must be clean and contain no bubbles) and the process conditions (which must be constant in pressure and viscosity to keep the leakage flow constant). Other disadvantages include their high cost, the need for periodic recalibration, and the requirement for such accessory equipment as filters and air-releases.

MASS FLOWMETERS

The measurement of mass flow can be obtained as the product of volumetric flow and density or as a direct measurement of the mass flow of the flowing process gas, liquid, or solids.

The mass flow of homogeneous gases is most frequently measured by thermal flowmeters. The main advantage of these detectors is their good accuracy and very high rangeability. The main disadvantage is their sensitivity to specific heat variations in the process fluid due to composition or temperature changes. If not compensated for, these changes will register as changes in mass flow. Thermal devices, such as the hot wire anemometers and thermal flow switches, can also detect volumetric flow rates and the flow velocities of process streams.

© 2003 by Béla Lipták

The mass flow of liquids and gases can be directly detected by angular-momentum devices or indirectly through the measurement of volumetric flow and density. These traditional methods have, in recent years, been overshadowed by the Coriolis mass flowmeter. These units detect the twisting of an oscillating, usually stainless steel, flow tube. This twist is a function of the mass flow through the tube. Coriolis meters can operate at process flow velocities from 0.2 to 20 ft/sec (0.061 to 6.1 m/sec) and therefore can provide a rangeability of 100:1. Their accuracy is also high (0.2% of actual flow), their pressure and temperature ratings are acceptable, and, in addition to the mass flow output signal, they can be provided with additional outputs for signaling alarm conditions or detecting the process fluid's density.

Some limitations include their relatively small sizes (up to 6 in. [150 mm]), their vibration sensitivity, and the inability to handle high-temperature process fluids (over 400°F [205°C]). The Coriolis-based mass flowmeters are very popular in the measurement of fuel flows and reactor feed flows, and in other measurements where the mass rather than the volume of the process flow is of interest.

At low flow rates, the Wheatstone-type mass flowmeter can measure flow within an error of ±0.5% of actual flow over a 100:1 range.

The mass flow of solids in gravity flow installations can be detected by impact flowmeters, which are relatively low-accuracy devices. Better accuracy and rangeability are provided by belt-type gravimetric feeders, which measure both the speed and loading of the moving belt. In addition, the loss in weight-type systems can also measure the mass flow of liquids or solids by differentiating the load cell signal from tank weighing systems. The rate at which the total weight is dropping is the mass flow out of the tank. These systems do not provide high precision and are recommended for the measurement of hard-to-handle process flows, because they do not make physical contact with the process stream.

Cross-correlation flowmeters are available for the measurement of mass flow of solids in pneumatic conveying systems or for volumetric flow measurements. The cross-correlation flowmeter uses statistical means to average the time it takes for particles in a fluid to travel a known distance. The meter can be noninvasive and is suitable for the measurement of the flow of solids and two-phase flows, including heavy slurries and very corrosive and difficult liquid-flow measurement applications. Their disadvantages include high cost, a fairly high minimum requirement on the operating Reynolds number, and poor accuracy.

LOW-FLOW APPLICATIONS

The measurement and control of low flow rates is a requirement in such applications as purging, in bioreactors, in leak testing, and in controlling the reference gas flow in chromatographs or in plasma emission spectrometers.

The most traditional and least expensive low-flow sensor is the variable area flowmeter, which is frequently made out of a transparent acrylic material. It has a high rangeability (10:1) and requires little pressure drop. Due to its relatively low accuracy, it is most often used in purge and leak-detection applications.

A much more accurate low flow detector and controller in gas metering applications is the sonic flow nozzle. This nozzle accurately maintains constant flow as long as sonic velocity is maintained, which is guaranteed by keeping the inlet pressure at about 50% over the outlet pressure. The disadvantages of the sonic nozzle include its high cost and high pressure drop. Another disadvantage is the difficulty in modulating the flow rate.

In laminar flow elements, the pressure drop and flow are in a linear relationship. The laminar flow element can be used in combination with either a differential-pressure or a thermal type of flow detector. These flowmeters provide better rangeability at about the same cost as sonic nozzles. They have a 100:1 rangeability, and control capability is readily available. Another advantage of thermal flowmeters over sonic nozzles is their inherent capability to detect mass flow. Thermal flowmeters also can directly detect low-mass flows without any laminar elements. In that case, they are installed directly into the pipeline as either thermal flowmeters or anemometers.

SPECIFYING THE KEY REQUIREMENTS

Inaccuracy

The accuracy of a flow detector is one of its most important features. One should not specify accuracy in such vague terms as "best possible" or "better than one-quarter percent" because (1) these statements are not explicit and (2) if taken at face value, they could severely limit the meter choice and result in unnecessarily high costs. Therefore, the metering accuracy should be specified precisely and at a realistic value.

In some instances—for example, in case of repetitive batch dispensing—absolute accuracy is of no critical consequence, provided that the long-term reading of the meter is stable and repeatable. In such applications, absolute accuracy is less important than long-term repeatability. In other applications, where absolute accuracy is important, one should clearly specify the flow range over which the specified error limit applies. If the error limit is given as a percentage, it should be clearly stated whether it is based on full scale (%FS) or on actual reading (%AR). It is also important to distinguish the accuracy requirements for the meter from the expected installed performance, which can be affected by variations in the properties of the flowing stream, piping configurations, and other factors.

The comments made about accuracy in Section 1.5 (Chapter 1) are also applicable to flow sensors. As stated there, one should always define the flow range over which the accuracy statement applies. As illustrated in Figure 2.1k, in case of %FS sensors, the absolute error increases as the flow rate drops.

© 2003 by Béla Lipták

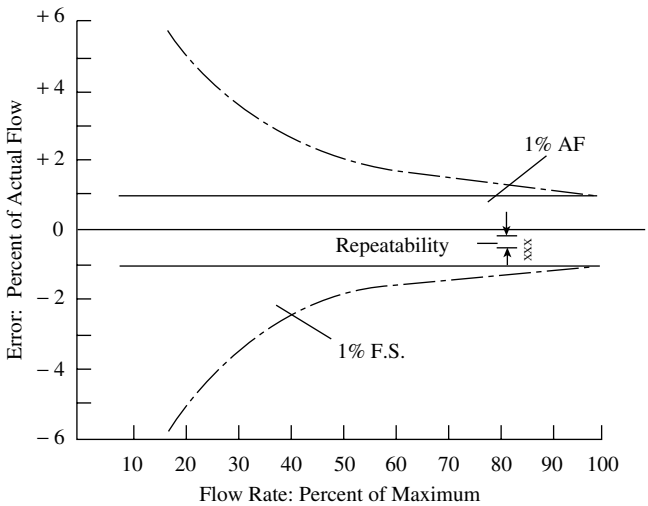

FIG. 2.1k
Comparison of 1% F.S. inaccuracy with 1% of flow inaccuracy.

Therefore, in a properly prepared specification, the accuracy requirement should state both the required flow range and the allowable error. Such a specification might read "1% AF from 10 to 100% flow" or "0.5% FS from 5% to 100% flow."

If a flow detector is nonlinear, that nonlinearity must be corrected for; otherwise, it will degrade the measurement accuracy. Linearity is the extent to which the relationship between the flow and the meter output approaches a straight-line relationship. The linearity of a flow sensor is often different during factory calibration as compared with under the installed conditions in the field.

The vendor's published data on meter performance is generally based on ideal installation and operating conditions. Therefore, although the meter is capable of achieving that performance level, there is no guarantee that it will realize it under actual operating conditions. For example, insufficient upstream straight piping can result in substantial swirling, which will cause a deterioration in the linearity of the meter and will therefore shift the calibration constant of the meter. Consequently, the manufacturer's installation recommendations should be followed carefully, or, if this is not possible, the likely deterioration in performance should be evaluated and determined to be acceptable before making the installation.

Changes in fluid characteristics can also alter the meter's performance. Figure 2.1l for example, illustrates the effects of viscosity variations between 0.3 and 25 CTP on the performance of two of the most accurate flow detector types, the turbine meter and the positive-displacement meter. In case of the turbine meter, an increase in viscosity lowers the measurement accuracy; in case of the PD meter, it improves the performance, and it is the reduction in viscosity that causes a deterioration in the performance. For any application, the acceptability of the consequences of the expected operating conditions should be verified in advance.

Wear, drift, and expected shifts in calibration should also be investigated, and the corresponding maintenance costs

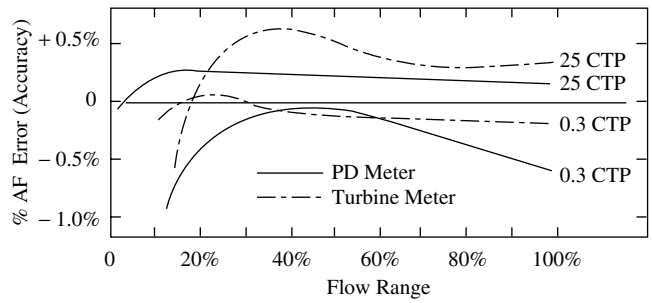

FIG. 2.1l
Differing effects of viscosity variation on a turbine meter and a positive displacement meter (CTP = centiPoises).

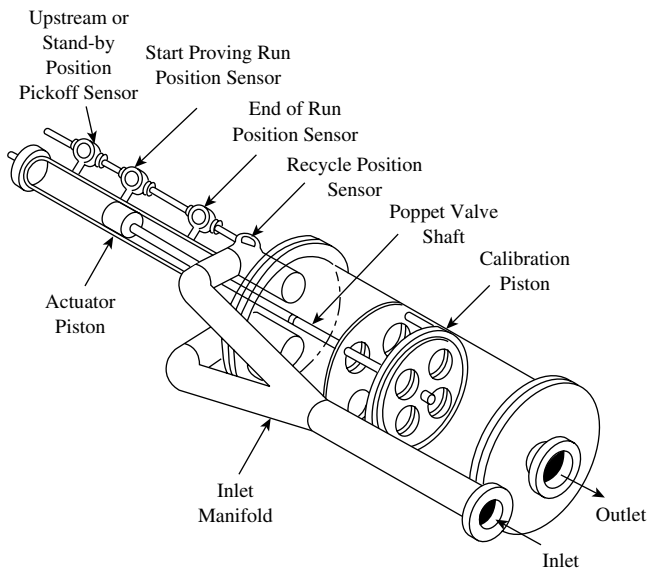

FIG. 2.1m
Inline ballistic flow prover. (Courtesy of Brooks Instrument Div. of Emerson Electric.)

evaluated, when considering alternative meter options. In critical applications, one might consider the installation of automatic on-stream recalibration equipment. Figure 2.1m illustrates an in-line ballistic prover that can recalibrate a flow detector without requiring an interruption of the process flow.

Safety

Safely is one of the most important considerations in the selection of any industrial equipment. In case of flow detection, all meter components must be certified as suitable for the applicable electrical area classification for the location at which they will operate. Meeting such requirements may be achieved by installing purely mechanical or pneumatic devices or, more commonly, by selecting intrinsically safe, flameproof, or explosion-proof devices.

Other safety aspects (often overlooked) are the safety of the selected materials of construction and the possible safety consequences of leakage. Fluids such as oxygen or liquid

© 2003 by Béla Lipták

chlorine can cause explosions, because they react with certain materials. If the heat of such reactions cannot be removed, and especially if the resulting pressure is confined, violent explosions can result. Therefore, various organic and inorganic substances, including ordinary lubricants such as oil, grease, and wax, can cause explosions in the presence of oxygen or chlorine. It is therefore essential that any flowmeter operating in such services be thoroughly cleaned and degreased.

The choice of the materials of construction is also critical for applications involving high concentrations of oxygen. The use of steels, for example, presents an explosion hazard, which increases with a rise in the velocity and pressure of the flowing oxygen. The maximum allowable velocity and pressure in such applications depends on the cleanliness and surface finish of the working components. Therefore, clean steel with high surface finish can be used at higher pressures and flow rates than can regular steel. Yet, the best protection is to select such alternative materials as phosphor bronze, gun metal, brass, beryllium, copper, and so forth.

To protect the operators, it is essential that leakage of noxious or dangerous fluids be eliminated or kept to an absolute minimum. The addition of every joint increases the probability of leakage. Therefore, the presence of manifolds, pressure taps, and fragile components all add to the probability of leakage. Therefore, when metering dangerous or noxious materials, nonpenetrating flowmeter designs are preferred.

Installation

Installation requirements vary dramatically among the various meter types and can be the deciding factors in meter selection. The most demanding applications are ones in which the process flow cannot be stopped and the measurement point cannot be bypassed. In such applications, the selection choice is limited to clamp-on meters, such as the ultrasonic Doppler or the cross-correlation design, and to the hot-tap insertion meters, such as the various probe designs.

Even if block and bypass valves can be installed around the meter, the installation requirements still affect both cost and plant acceptability. One critical consideration is the availability of the requisite straight upstream and downstream pipe lengths. If they are not available, it is necessary to derate the performance of the meter or to consider an alternative design such as an electromagnetic sensor, which requires only the equivalent of 5 pipe diameters in straight upstream piping.

Specific application requirements affect different meters in different ways. For example, if an electric power supply is not available at the measurement point, this eliminates the electromagnetic flowmeter from consideration. If a vertical pipe section cannot be provided, one cannot consider the variable area meter. A positive-displacement meter requires a strainer, often an air release, and so on. Even if the meter installation requirements can be met, their effect on the overall system cost must still be considered and quantified, because the selection should consider the total cost, which should include installation, operation, and maintenance expenses.

Cost

Cost is a critical factor in the selection of any equipment. To arrive at a "reasoned" decision, one should not evaluate the purchase price only. Other factors, such as operating costs, maintenance, spare parts inventory, the effect of downtime, and many others, should all be considered if a reasoned decision is to be reached. Hardware costs, in general, should always be balanced against the potential benefits of increased plant efficiency or product quality. These benefits are usually by-products of increased sensor accuracy, repeatability, and rangeability, which all tend to increase metering costs.

When evaluating the various flowmeter choices, the cost comparison should be based on the total system cost and not merely the flowmeter price. Not only should such costs as the expenses for providing separate converters or transmitters be included, we should also consider the cost of ancillary items such as straight upstream and downstream piping, flow conditioning and filtering equipment, electric power supplies, and so on. The cost of installation also varies with local labor rates and can be a significant factor in the meter selection process.

Operating costs are also an important consideration. Operating costs are affected by the amount of routine service required and by the level of maintenance personnel needed. These costs also increase if special tools such as flow simulator equipment are required and are not already available.

In addition to the preceding, we should consider the versatility of the selected meter. We should determine whether the secondary units required for the particular device can also be used on other meters. We should check whether the meter can be used in other applications and determine the ease with which it can be reranged. Spare parts requirements should also be reviewed to establish both the value of the required inventory and whether the spares will be interchangeable with other meter sizes and models. And we should also consider the estimated total life of the meter (which tends to be shorter if there are moving components) and review the coverage of the guarantee provided for the meter.

The pressure loss through the meter is also part of its total operating cost. If we are comparing an orifice plate and a low-loss flow tube, the initial cost of the orifice plate is much lower; however, because of the head loss, its total cost can be higher. As was discussed earlier, pumping cost is a function of flow rate, electricity costs, pumping efficiency, and pressure loss. Consequently, the higher the pressure drop across the flow sensor, the higher will be the pumping costs throughout the life of the installation.

References

1. Linn, J. K. and Sample, D. G., Mass Flow Measurement of Solids/Gas Stream Using Radiometric Techniques, Report SAND-82–0228C, U.S. Dept. of Energy, Washington, DC, 1982.
2. Pursley, W. C. and Humphreys, J. S., Two-phase flow measurement at NEL, in *Proc. NEL Fluid Mechanics Silver Jubilee Conference,* National Engineering Lab, East Kilbride, UK, 1979.

© 2003 by Béla Lipták

3. Hewitt, G. F. and Whalley, P. B., Flow measurement in two-phase (gas-liquid) systems, in *Proc. Interflow '80,* Institution of Chemical Engineers, Rugby, UK, 1980.
4. John, H. and Riemann, J., *Test Facility for Tests and Calibration of Different Methods of Two-Phase Mass Flow Measurements,* Institute Fuer Reaktorbauelements, Karlsruhe, Germany, 1979.
5. Lipták, B. G., Flow measurement trends, *Control,* June 2000.

Bibliography

Batur, C., Measuring flow with machine vision, *InTech,* May 1989.
Baker, R. C., *Flow Measurement Handbook,* Cambridge University Press, UK, 2000.
Corser, G. A. and Hammond, G. C., A combined effects meter, *InTech,* April 1993.
Cushing, M., The future of flow measurement, *Flow Control,* January 2000.
De Boom, R. J., Flow Meter Evaluation, ISA Conference Paper #91–0509, 1991.
Defeo, J. W., Turbine Flowmeters for Measuring Cryogenic Liquids, ISA Conference, Houston, October 1992.
Desmeules, M., *Fundamentals of Gas Measurement,* Canadian Meter Company, Milton, Ontario, Canada, June 1999.
Eren, H., Flowmeters, *Survey of Instrumentation and Measurement,* S.A. Dyer, Ed., John Wiley & Sons, New York, 2001.
The Flowmeter Industry, 1985–1990, 2nd ed., Venture Development Corp., Natick, MA, 1986.
Furness, R. A., Developments in pipeline instrumentation, *Pipe Line Rules of Thumb Handbook,* 4th ed., Gulf Publishing, Houston, TX, 1998.
Ginesi, D., Application and Installation Guidelines for Flowmeters, ISA/93 Conference, Chicago, IL, September 1993.
Ginesi, D. and Annarummo, C., User tips for mass, volume flowmeters, *InTech,* April 1994.
Grant, K., Mass Flow Measurement Applications, ISA/93 Conference, Chicago, September 1993.
Husain, Z. D., Flowmeter Calibration and Performance Evaluation, ISA Conference, Paper #91–0508, 1991.
Ifft, S. A., *Custody Transfer Flow Measurement with New Technologies,* Saudi Aramco, Saudi Arabia, 1999.
Krigman, A., Flow measurement: some recent progress, *InTech,* April 1983.
Lipták, B. G., On-Line Instrumentation, *Chemical Eng.,* March 31, 1986.
Lipták, B. G., Flow measurement trends, *Control,* June 2000.
Lipták, B. G., Flow meter selection, *Control,* 2002.
Magness, M., Ultrasonic flowmeters pick up speed, *Control,* April 1996.
Mersh, F., Speed and Flow Measurement by an Intelligent Correlation System, Paper #90–0632, 1990 ISA Conference, New Orleans.
Miller, R. W., *Flow Measurement Engineering Handbook,* McGraw-Hill, New York, 1993.
Miller, R. W., *Flow Measurement Handbook,* 3rd ed., McGraw-Hill, New York, 1996.
O'Brien, C., Fueling flowmeter accuracy, reliability, *InTech,* April 1989.
O'Brien, C., Flowmeter terms, types and successful selection, *InTech,* December 1989.
Renda, L., Flowmeter calibration, *Meas. Control,* February 1993.
Ribolini, E., Intelligent and mass vortex flowmeters, *InTech,* February 1996.
Robinson, C., Obstructionless flowmeters: smooth sailing for some, rough passage for others, *InTech,* 33(12), 33–36, 1986.
Rose, C. and Vass, G. E., Magmeter measures flow in partially filled pipes, *InTech,* April 1995.
Rusnak, J., The fundamentals of flowmeter selection, *InTech,* April 1989.
Scrapa, T. J., Magmeter spotlights new technology, *InTech,* April 1994.
Spitzer, D. W., What affects flowmeter performance, *InTech,* February 1993.
Spitzer, D. W., *Flow Measurement,* 2nd ed., ISA, Research Triangle Park, NC, 2001.
Stobie, G. J., Wet gas metering in the real world, Wet Gas Metering Seminar, Paris, 2001.
Waring, T., *Fundamentals of Rotary Meter Measurement,* Dresser Canada, June 1999.
Watson, G. A., Flowmeter types and their usage, *Chartered Mech. Eng. J.,* 1978.
Welch, J. V., Trends in low gas flow metering, *InTech,* February 1991.
Young, A. M., Volumetric Flowrate Measurement with Coriolis Flowmeter, 1990 ISA Conference, Paper #90–0631.
Yoder, J., Flowmeter shootout, part I and II: new technologies, *Control,* February and March 2001.
Zapolin, R. E., New Ways to Meet User Needs for SCADA Mass Flow Monitoring, 1990 ISA Conference, Paper #90–0633, New Orleans, 1990.

© 2003 by Béla Lipták

2.2 Anemometers

D. S. KAYSER (1982) **J. KOZÁK** (1995) **B. G. LIPTÁK** (2003)

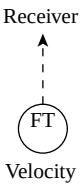

Flow Sheet Symbol

Types	A. Pitot B. Mechanical B1. Vane B2. Cup B3. Propeller or turbine C. Thermal D. Doppler D1. Acoustic or ultrasonic D2. Laser
Applications and Designs	Hand-held air velocity sensors are used in HVAC applications; transmitting anemometers are utilized in industry and as wind speed monitors
Airflow Velocity Ranges, Given in Feet per Minute (ft/min)	(1 ft/min = 0.3048 mpm = 0.0183 km/h = 0.0114 mph = 0.0167 ft/sec = 0.005 m/sec = 101.2 knots) A. 0 to 300, 0 to 1250, 0 to 2500, 0 to 5000, and 0 to 10,000 are standard ranges; total capability is 25 to 30,000 B1. 300 to 3000 is standard; can cover 30 to 12,000 B2. 0 to 15,000 B3. 0 to 13,000 C. 20 to 500, 50 to 1000, 100 to 2000, and 0 to 6000 are standard ranges; stack flow probes can go up to 18,000 D1. 0 to 7000 D2. 0 to 60,000 or up to supersonic
Wind Measurement Heights	A, B, and C. Detect wind velocities at the elevation of the tower height D1. Measures wind velocity in strata of 150 ft (50 m) thickness from 200 to 2000 ft (60 to 600 m) and sometimes up to 5000 ft (1500 m)
Inaccuracy	A. 2 to 3% of full scale B1. From 1% of reading to 2% of full scale C. 2% of full scale D1. 1% of full scale
Costs	Hand-held pitot, thermal, and mechanical anemometers range from $500 to $2500. Sensor probes alone cost about $300 to $500; combined units reading air velocity, humidity, and temperature are available from $800 to $3000. A vane-type probe with a 4- to 20-mA DC transmitter with a 1.5% full-scale error is about $2500. Thermal stack flow probes for wet and dirty gas applications cost about $5000. Doppler acoustic sounders for remote sounding of wind profiles range in cost from $15,000 to $90,000; average cost is about $50,000. Laser Doppler units range from $25,000 to $45,000.
Partial List of Suppliers	ABB Instruments Inc. (www.abb.com/us/instrumentation) (A) Air Instruments & Measurements Inc. (www.aimanalysis.com) (B, D) Air Monitor Corp. (www.airmonitor.com) (A) Alnor Instrument Co. (www.alnor.com) (B1, C) Anderson Instrument Co. (www.andinst.com) Cole-Parmer Instrument Co. (www.coleparmer.com) (A, B, C)

© 2003 by Béla Lipták

Dwyer Instruments Inc. (www.dwyer-inst.com) (A, C)
Eldridge Products Inc. (www.epiflow.com) (C)
The Foxboro Co. (www.foxboro.com) (A)
Intek Inc. (www.intekflow.com) (C)
Kobold Instruments Inc. (www.koboldusa.com) (A)
Kurz Instruments Inc. (www.kurzinstruments.com) (C)
Meriam Instrument (www.meriam.com) (A)
Mid-West Instrument (www.midwestinstrument.com) (A)
Sierra Instruments Inc. (www.sierrainstruments.com) (C)
TSI Inc. (www.tsi.com) (B, C, D2)
United Electric Controls Co. (www.ueonline.com) (A)
Vaisala Inc. (www.vaisala-usa.com) (B1, 2)

Anemometers are used to measure air and gas flows in a variety of applications, including such tasks as the balancing of HVAC systems using hand-held air velocity meters. They are also used in stacks to measure the velocity of wet and dirty gases and in wind detection applications to obtain three-dimensional wind velocity profiles using Doppler-type sensors. Anemometer designs include pitot, mechanical (vane, cup, propeller, turbine), thermal, and Doppler types. Pitot tubes and thermal flowmeters are discussed later in this chapter. This section concentrates on the mechanical and Doppler-type anemometers.

MECHANICAL ANEMOMETERS

Figure 2.2a illustrates the vane design. Airflow causes the vanes to rotate with an angular velocity that is proportional to the wind speed. When a portable unit is required, or when the local readout is satisfactory, vane velocity is sent to a local indicator through a gear-and-spring assembly. When remote readouts are required, a magnetic or capacitive coupling is used to generate a transmission signal.

Figure 2.2b shows a three-cup anemometer, which is insensitive to wind direction. In one design, the shaft drives a direct current (DC) tachometer, which generates an output voltage that is proportional to the wind speed. This signal can be used as the input to a remote mounted indicator or recorder. The impeller design shown in Figure 2.2c is also provided with a shaft-driven tachometer. Because the tail of this impeller design always points the impellers into the wind, this instrument can detect both wind speed and wind direction.

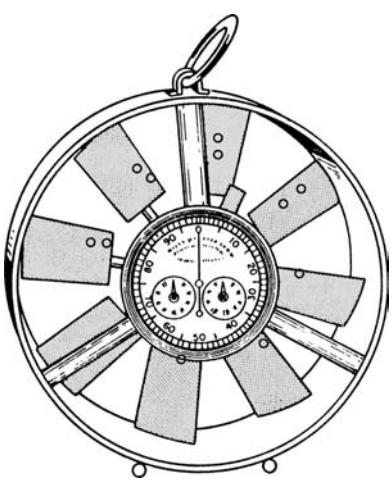

FIG. 2.2a
Vane anemometer with local readout.

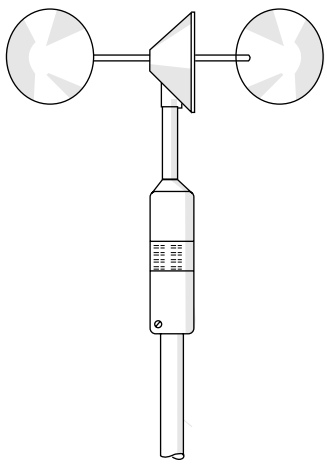

FIG. 2.2b
Three-cup anemometer.

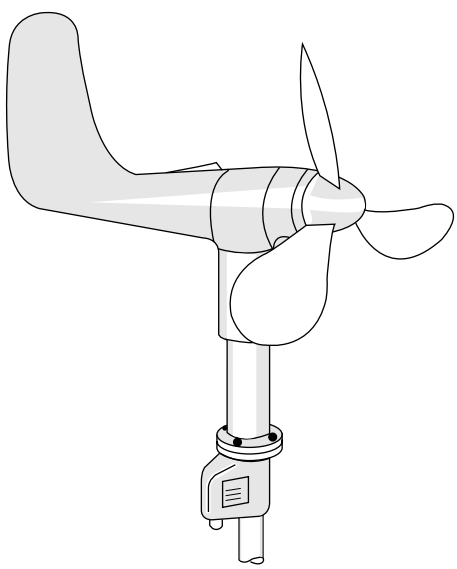

FIG. 2.2c
Impeller anemometer.

© 2003 by Béla Lipták

The response speed of an anemometer is expressed in terms of the *length of wind* that has to pass through the meter before the velocity sensor response amounts to 63% of a step change in velocity. This is known as the *distance constant* and is generally expressed in feet. A typical distance constant for commercially available units is 6 ft (1.8 m).

THERMAL ANEMOMETERS

The thermal flowmeters are discussed in some detail later in this chapter and therefore are only briefly mentioned here. The hot-wire anemometer (Figure 2.2d) operates as a heated thermopile that is cooled at a rate that is proportional to the air (or gas) velocity at the probe tip. It is available in ranges of 100 to 2000, 50 to 1000, and 20 to 500 ft/min (0.5 to 10.0, 0.25 to 5.0, and 0.1 to 2.5 m/sec, respectively).

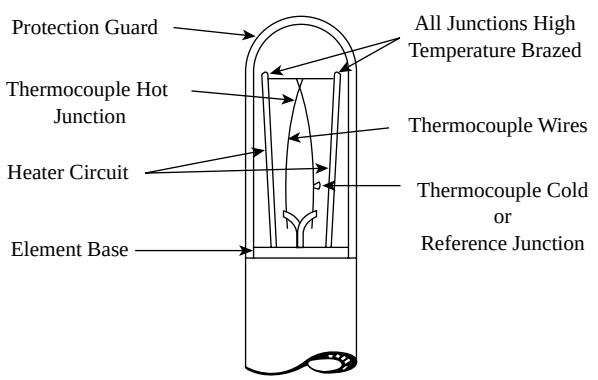

FIG. 2.2d
Hot-wire anemometer.

DOPPLER ANEMOMETERS

When sound or light is beamed into the atmosphere, any nonhomogenities in the air will reflect these beams. The resulting Doppler shift in the returning frequencies can be interpreted as an indication of wind velocity. The acoustic Doppler devices are more often used than the laser types. They are particularly useful in air pollution monitoring applications.

When laser-based Doppler anemometers are used, the intensity of the light scattered by the reflecting particles in the air is a function of their refractive index and the size (up to 5 microns). At particle sizes under 5 microns, it is safe to assume that the particle velocity is the same as that of the air (gas or liquid). Often, the naturally present particles (especially in water) will guarantee satisfactory performance, but, to obtain "perfect" measurements, seeding is recommended.

The operation of laser Doppler anemometers (LDAs) utilizes the Doppler effect or Doppler shift of frequency (color), which occurs as light is dispersed from the surface of moving particles. This shift in the frequency (color) of the light source (laser beam) is proportional to the velocity of the dispersing particles. Relative to the frequency of the light, this frequency shift is very small (from 1 kHz up to 0.1 MHz), and thus it cannot be directly measured.

Therefore, an arrangement using the interference between the original and the refracted lights is used. This configuration is called the differential mode of the LDA. Figure 2.2e illustrates this principle, where beams from the laser source intersect each other in the measurement zone. In this zone, a set of interference plates are formed. When particles pass through these plates, they generate optical signals with flash frequencies equaling the Doppler frequency. This signal is then scanned by the photomultiplier and analyzed. The signal

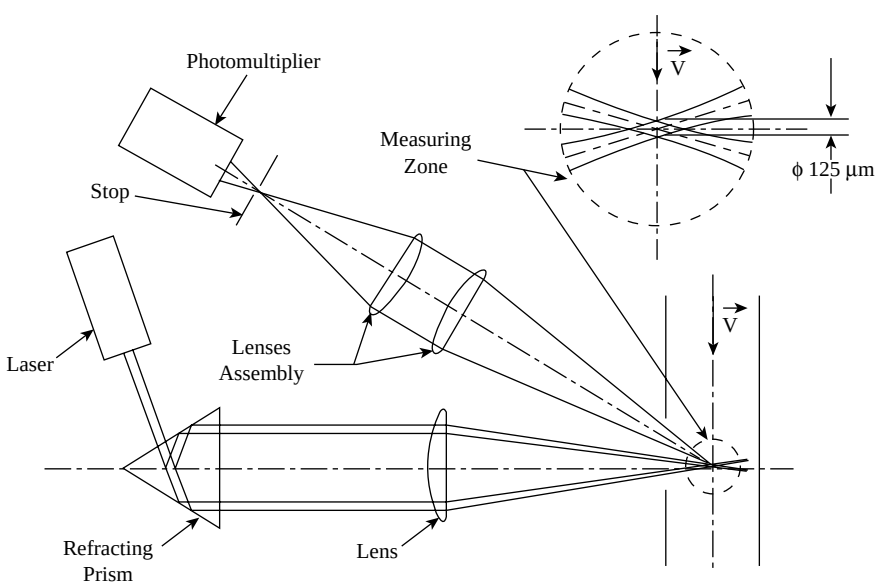

FIG. 2.2e
Operation of the laser Doppler anemometer.

© 2003 by Béla Lipták

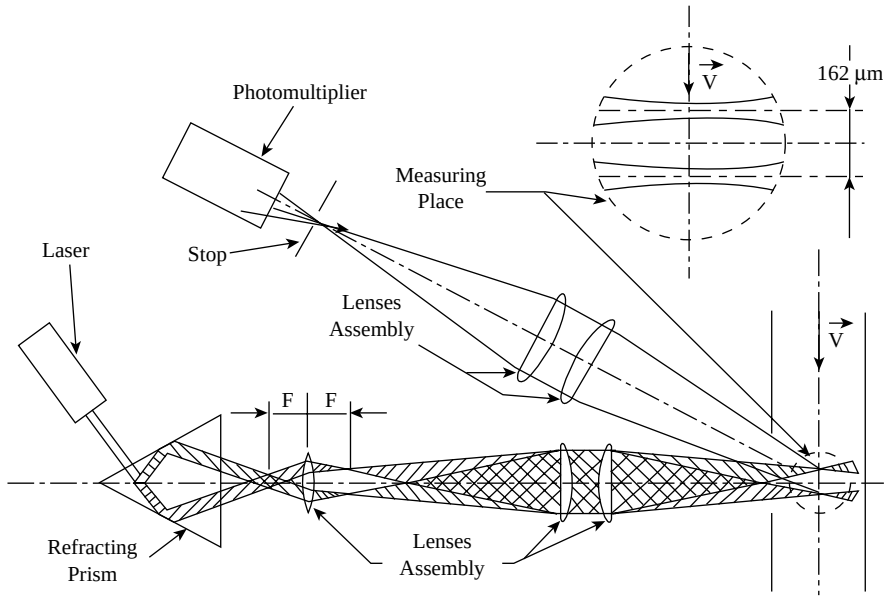

FIG. 2.2f
Operation of the laser two-focus anemometer.

has high frequency, several cycles, variable amplitude, and background noise.

In addition to the anemometers using the laser Doppler principle, there also are laser anemometers utilizing two-focus and transmit time principles. The laser two-focus anemometer (L2F) measures the time needed for particles to pass between the known distance between two focused beams (Figure 2.2f). The signal consists of two pulses and is scanned by a photomultiplier. The processing is provided by an autocorrelator. The disadvantage of this method is that the probability is small that the particles will pass through both beams. On the other hand, the resulting measurement signal is stronger and has less background noise.

Both types of noncontact Doppler measurements are suitable for nearly all hydrodynamic and aerodynamic velocity measurement applications.

CONCLUSION

For noncontacting velocity measurements, only the Doppler-type sensors can be considered. When locating other anemometers, the structures on which they are mounted are likely to disturb the airflow. A rectangular building will disturb airflow up to an elevation of about twice its height above grade, six times its height leeward, and twice its height in the windward direction.

In process industry installations, it is always a good idea to have wind direction indicators so the operators will always know which is the safe direction for escape in the event of a spill. Under such emergency circumstances, the knowledge of wind speed is of considerably less importance.

Bibliography

Anemometers, *Meas. Control*, June 1993.
Baker, R. C., *Flow Measurement Handbook*, Cambridge University Press, UK, 2000.
Cushing, M., The future of flow measurement, *Flow Control*, January 2000.
Durrani, T. S., *Laser Systems in Flow Measurement*, Plenum Press, New York, 1977.
Eren, H., Flowmeters, *Survey of Instrumentation and Measurement*, S.A. Dyer, Ed., John Wiley & Sons, New York, 2001.
Laskaris, E. K., The measurement of flow, *Automation*, 1980.
LeMay, D. B., A practical guide to gas flow control, *Instrum. Contr. Syst.*, 1977.
Lipták, B. G., Flow measurement trends, *Control*, June 2000.
Lomas, D. J., Selecting the right flowmeter, *Instrum. Technol.*, 1977.
MacCready, P. B. and Jex, H. P., Response characteristics and meteorology utilization of propeller and vane wind sensors, *J. Appl. Meteorology*, 1964.
Miller, R. W., *Flow Measurement Handbook*, 3rd ed., McGraw-Hill, New York, 1996.
Spitzer, D. W., *Flow Measurement*, 2nd ed., ISA, Research Triangle Park, NC, 2001.

© 2003 by Béla Lipták

2.3 BTU Flowmeters for Heat Exchangers

B. G. LIPTÁK (1982, 1995, 2003)

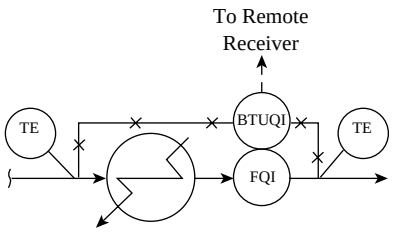

Flow Sheet Symbol

BTU Flowmeter Types	A. All mechanical design B. Electronic BTU computer
Approximate Cost	A. About 50% more than the cost of the positive-displacement flowmeter; in smaller sizes and standard materials, usually less than $5000. B. The sum of the costs of a flow transmitter, a temperature-difference transmitter, multiplier, and display. The package cost varies with line size, materials of construction, transmitter accuracy, and type of display; it is likely to reach or exceed $10,000.
Inaccuracy	A. ±2 to 5% of full scale B. ±0.5% of full scale
Minimum ΔT	A. 5°F (2.8°C) B. 1°F (0.56°C)
Partial List of Suppliers	ABB Water Meters Inc., which bought Kent Meters Inc. (www.jerman.com/abbmeter.html) (A) Tyco Valves & Controls LP, which bought Hersey Measurement Co. (www.tycovalves.com) (A) Type "B" units can be configured by multiplying the output signal of any digital or analog flow transmitter with that of a temperature difference transmitter.

BTU flowmeters play a critical role in monitoring the energy flows and increasing energy efficiency in industry. The first step toward an energy-efficient plant design is a reliable energy audit throughout the plant. Such overall heat balance around the plant can be prepared only if the individual loads are accurately and separately measured.[1] This is illustrated in Figure 2.3a.

In the figure, the efficiency of the boiler is measured by the ratio of the total energy flows at points 1 and 2. This is usually done intermittently, by totalizing the fuel and steam flows over some period of time. The total energy input into the boiler is obtained by multiplying the total fuel consumed over that period with its heating value. The total useful energy output obtained from the boiler is obtained by multiplying the totalized steam flow by the difference between the enthalpy of the steam and the enthalpy of the feedwater. The ratio of these energy in and outputs is the boiler's actual efficiency.

Similarly, the coefficient of performance of the chiller shown in Figure 2.3a is measured by the ratio of the energy flows at points 10 and 11. Similarly, the efficiency of the

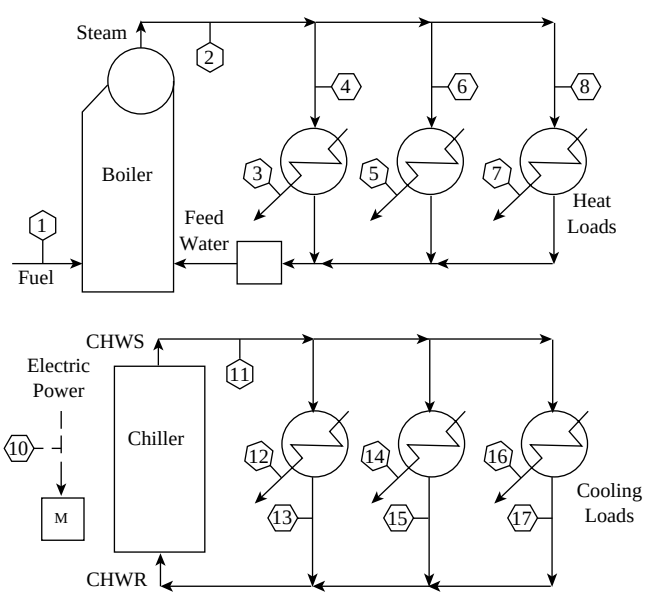

FIG. 2.3a
Plant-wide energy audit.

© 2003 by Béla Lipták

individual heat exchangers is also detected by measuring the energy flows on both the utility and the process sides of the exchanger, such as at points 3 and 4 or points 12 and 13 in Figure 2.3a.

The efficiency of the overall utility distribution system is determined by comparing the sum of the individual loads with the total supply at the source, such as comparing the energy flow at point 1 with the sum of energy flows 3, 5, and 7 or comparing 10 with the sum of 13, 15, and 17. The difference between the two represents the losses that occur as a result of phenomena such as insufficient thermal insulation of the pipe lines, leaking steam traps, and others.

When various techniques are considered for the optimization of the unit operations in a plant, it is recommended to empirically measure the energy consumption both before and after the optimization of the process. Without such reliable data, no accurate cost–benefit analysis can be made. The payback period for the installation is determined by dividing the optimization costs with the measured yearly energy saving.

For measuring most of the energy flows in Figure 2.3a, BTU flowmeters are required. These BTU computing units are available in both mechanical and electronic designs.

MECHANICAL BTU METERS

In mechanical BTU meters, flow is detected by positive-displacement or propeller-type sensors, and the volumetric flow rate is mechanically transmitted through gear trains. The temperature difference between the cold and hot sides of the exchanger is sensed by filled thermal bulbs, which are connected to a bourdon spring as illustrated in Figure 2.3b. Dual cam rollers are used in the computing mechanism so as to produce digital displays in both units of total BTUs and total flow.

The advantages of this design include its simplicity, low cost, and the fact that it does not require an external power supply. In centralized control systems, transmitting attachments can also be provided where remote readouts are needed.

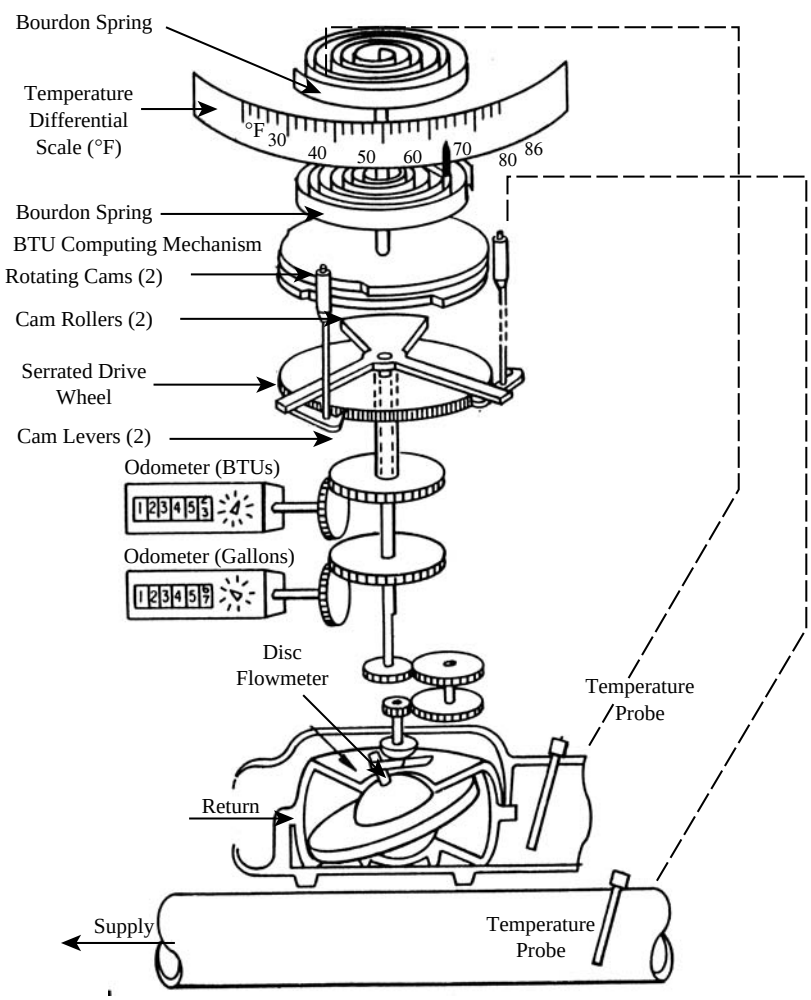

FIG. 2.3b
Mechanical BTU meter.

© 2003 by Béla Lipták

The limitations of this design include its relatively low accuracy, which is about ±2% of full scale, if the temperature difference exceeds 15°F (8.3°C). As the temperature difference decreases, this error rises and it becomes unacceptable at around 5°F (3°C). Therefore, these units are not recommended for use in applications where the temperature difference is under 5°F (3°C).

The typical applications for the mechanical BTU meters are in the heating, ventilating, and air conditioning (HVAC) industry and in heat exchanger efficiency monitoring.

ELECTRONIC BTU METERS

In electronic BTU computer packages, the flow sensor is usually a high-accuracy turbine flowmeter. The two temperatures or the temperature difference are usually detected by RTD-type temperature transmitters. Both the flow and temperature sensors are accurate devices, and they do provide high repeatability and wide turndown.

Therefore, the main advantage of electronic BTU computers is their superior accuracy. Their total error usually does not exceed ±0.5% of full scale.

As illustrated in Figure 2.3c, the BTU computer digitally displays the accumulated total ton-hours of refrigeration. In addition, analog electronic retransmission signals are also provided to facilitate the remote displays of flow rate, BTU rate, and temperature difference.

While these units are more expensive than mechanical BTU meters, the increase in cost can frequently be justified if the installation is larger or highly critical, or if accuracy is a prime concern.

Reference

1. Lipták, B. G., *Optimization of Industrial Unit Processes*, 2nd ed., CRC Press, Boca Raton, FL, 1999.

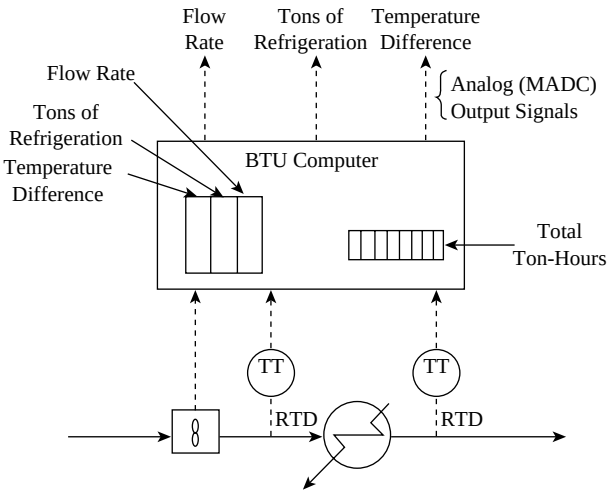

FIG. 2.3c
Electronic BTU meter.

Bibliography

Baker, R. C., *Flow Measurement Handbook*, Cambridge University Press, UK, 2000.

BTU Computer, Bulletin BTU-1, Barton Instrument Systems, LLC (formerly ITT Barton), City of Industry, CA.

Cushing, M., The future of flow measurement, *Flow Control*, January 2000.

Desmeules, M., *Fundamentals of Gas Measurement*, Canadian Meter Company, Milton, Ontario, Canada, June 1999.

Eren, H., Flowmeters, *Survey of Instrumentation and Measurement*, S.A. Dyer, Ed., John Wiley & Sons, New York, 2001.

Furness, R. A., Developments in pipeline instrumentation, *Pipe Line Rules of Thumb Handbook*, 4th ed., Gulf Publishing, Houston, TX, 1998.

Lipták, B. G., On-Line Instrumentation, *Chemical Eng.*, March 31, 1986.

Miller, R. W., *Flow Measurement Handbook*, 3rd ed., McGraw-Hill, New York, 1996.

Reese, W. M. Jr., Factor the energy costs of flow metering, *InTech*, July 1980.

Shinskey, F. G., *Energy Conservation through Control*, Academic Press, New York, 1978.

Spitzer, D. W., *Flow Measurement*, 2nd ed., ISA, Research Triangle Park, NC, 2001.

Yoder, J., Flowmeter shootout, part I and II: new technologies, *Control*, February and March 2001.

© 2003 by Béla Lipták

2.4 BTU Flowmeters for Gaseous Fuels

A. P. FOUNDOS (1982) **B. G. LIPTÁK** (1995, 2003)

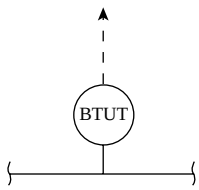

Flow Sheet Symbol

Sensors Required	Conventional head-type flowmeter, calorimeter, or wobble index detector plus pressure and temperature measurements
Process Fluids	Gaseous fuels
Applications	Combustion processes are optimized by measuring and controlling fuel gas flow on the basis of the heat flow (BTU/h) requirement of the process
BTU Flow Range	From 100 BTU/min to very large heat flow rates; limited only by pipe sizes
Inaccuracy	±1.0 to ±2.0% of full scale, depending on the accuracy of the head type flowmeter used
Costs	Refer to Section 8.8 for the costs of the different types of calorimeters. The cost of a general-purpose wobble index detector is $10,000 to $12,000. Explosion-proof designs cost $5000 to $6000 more. For flow, temperature, and pressure transmitter costs, refer to Chapters 2, 4, and 5.
Partial List of Suppliers	ABB Process Automation—Analytical Div. (www.abb.com/us) The Foxboro Co. (www.foxboro.com) Honeywell Industrial Control (www.honeywell.com/acs/cp) ICS (www.icsadvent.com) Thermo Onix Process Analyzers (formerly Fluid Data/Amscor) (www.thermoonix.com).

The heat flow rate provided by the burning of a fuel gas can be measured by detecting its mass flow rate and multiplying it by its heating value, which can be detected by wobble index sensors or calorimeters (discussed in Section 8.8). The burning of waste gases from a variety of process sources (Table 2.4a) and the accurate control of regular fuel gases made it necessary to measure their heat flows on line and continuously.

In the past, only the volumetric flow of the fuel gas was measured, and the heating value and the specific gravity of the gas were assumed to be constants. This approach is not acceptable for applications involving the burning of waste gases, because both their composition and heating values are variable.

In the past, in hazardous areas, the heating value of fuel gases could not be continuously measured, so specific gravity measurements were used to estimate their heating value and to control the combustion process. Today, continuous and explosion-proof calorimeters are available (Section 8.8) for the measurement of the heating value of any fuel gas. These optimized combustion controls are automatically adjusted for variations in either the specific gravity or the heating value of the fuel gas.

MEASURING HEAT FLOW BY WOBBLE INDEX

The heat flow rate (Q) of a gaseous fuel is calculated as the product of its volumetric flow rate at standard conditions (V_0) and of its calorific value (CV) or composition.

$$Q = V_0 \times CV = \text{SCF/hr} \times \text{BTU/SCF} = \text{BTU/hr} \qquad \textbf{2.4(1)}$$

Variations in composition affect both the heating value of the fuel gas and the pressure drop produced when the gas passes through an orifice plate. The volumetric flow through an orifice plate (V_0) can be expressed as the product of a constant (K) and the square root of the ratio $\Delta P/SG$. Therefore, the heat flow rate Q can be expressed as

$$Q = K\sqrt{\Delta P/SG} \times CV \qquad \textbf{2.4(2)}$$

where ΔP is the pressure differential across an orifice plate and SG is the specific gravity of the flowing fuel gas.

Rearranging that relationship for orifice pressure drop gives the following for $\sqrt{\Delta P}$:

$$\sqrt{\Delta P} = K \times V_0 \times \sqrt{SG} \qquad \textbf{2.4(3)}$$

© 2003 by Béla Lipták

TABLE 2.4a
Combustion Constants and Composition of Representative Manufactured and Natural Gases

	Blast Furnace Gas	Coal Gas	Coke Oven Gas	Natural Gas Residual Follansbee, W. Va.	Natural Gas Sandusky, Ohio	SNG Green Springs, Ohio	LNG Columbia Gulf Coast	NG Columbia Gulf Coast	Refinery Gas	Producer Gas
% Methane, CH_4		34.0	28.5		83.5	98.914	85.136	97.528	27.0	2.6
% Ethane, C_2H_6				79.4	12.5	0.01	10.199	1.238		
% Propane,C_3H_8				20.0			3.06	0.241		
% Ethylene, C_2H_4		6.6	2.9				0.0016		2.7	0.4
% Carbon monoxide CO	26.2	9.0	5.1			0.025			10.6	22.0
% Carbon dioxide, CO_2	13.0	1.1	1.4		0.2	0.439	0.018	0.487	2.8	5.7
% Hydrogen, H_2	3.2	47.0	57.4			0.61			53.5	10.5
% Nitrogen, N_2	57.6	2.3	4.2	0.6	3.8	0.002	0.201	0.224	3.4	58.8
% Oxygen, O_2			0.5				0.007			
% Other*							1.37	0.192		
BTU per cu. ft., high (gross) 60°F, 30 in. Hg, satd. H_2O	93	634	536	1868	1047				516	136
BTU per cu. ft., low (net) 60°F, 30 in. Hg, satd. H_2O	91.6	560	476	1711	946				461	128
Flame Temp. °F	2660	3910	3430	3830	3740				3970	3050

*Heavier hydrocarbons and traces of compounds including sulfurs.

The wobble index (*WI*) measures the ratio between the net calorific value (*CV*) and the square root of specific gravity (*SG*):

$$WI = CV/\sqrt{SG} \qquad \textbf{2.4(4)}$$

The advantage of detecting the wobble index is that it eliminates the need for separately measuring the specific gravity, because, as shown in Equation 2.4(5), the product of wobble index and orifice pressure drop [the product of Equations 2.4(3) and 2.4(4)] results in a value ($K \times Q$), which is directly related to the heat flow rate (Q), without requiring a separate measurement of SG.

$$WI \times \sqrt{\Delta P} = \left(CV/\sqrt{SG}\right) \times \left(K \times V_0 \times \sqrt{SG}\right)$$
$$= CV \times K \times V_0 = K \times Q \qquad \textbf{2.4(5)}$$

Because wobble index can be measured continuously in hazardous areas, this approach provides an on-line method of detecting heat flow rate.

THE BTU FLOWMETER LOOP

For gas fuels, the BTU flowmeter consists of a calorimeter (see Section 8.8) and an orifice type flow element. When the transmitted signals of these sensors are properly scaled, they can be multiplied to satisfy Equation 2.4(5) and the output of the multiplier (Figure 2.4b) represents the rate of heat flow in BTU/h units.

APPLICATIONS

In all combustion control processes, the calculation described in Figure 2.4b can provide a measurement signal that corresponds to the BTU flow rate. An optimized control system will ration the combustion air to this BTU flow rate in a feedforward configuration while responding to the firing rate demand signal of the process load in a feedback manner, as depicted in Figure 2.4c. This firing demand feedback signal to the setpoint of FIC-1 will throttle the fuel gas control value

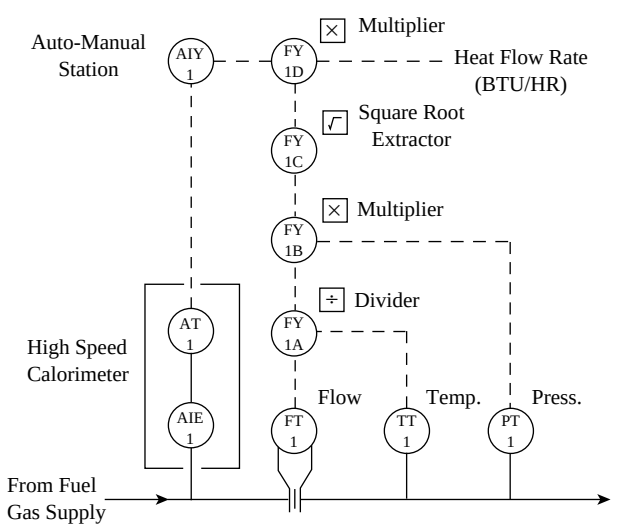

FIG. 2.4b
Heat flow rate detection loop.

© 2003 by Béla Lipták

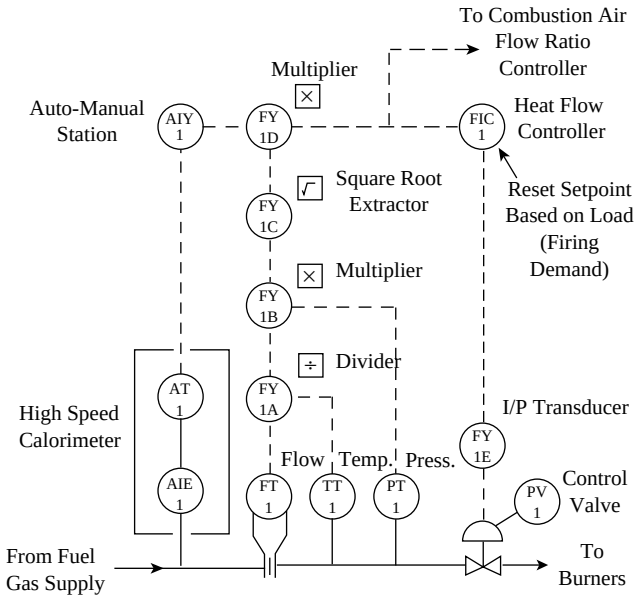

FIG. 2.4c
Combustion control system with heat flow controller.

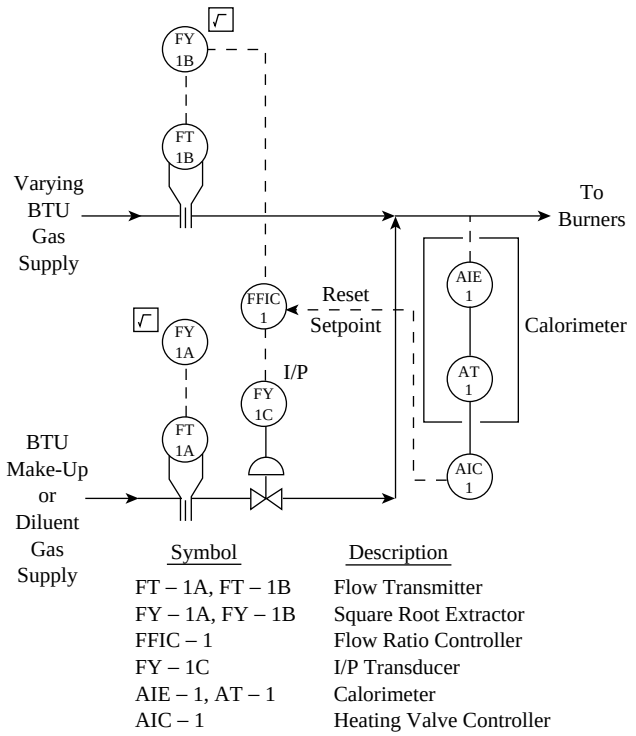

FIG. 2.4d
Control system to automatically maintain the heating value of mixed gas streams.

(PV-1) until it delivers the BTU flow rate required. In conventional systems, only the volumetric flow rate of the fuel gas is maintained.

The configuration shown in Figure 2.4c is commonly used when combustion systems are optimized or plants are updated. This control system makes the control of multiple fuel boilers and furnaces much easier, because, by fixing the BTU flow rate of the gaseous fuel, it becomes feasible to modulate the liquid fuel(s) as a function of the excess air in the flue gas.

Another common application of BTU flow metering is the blending of an enriching or diluting gas into the fuels so as to control the BTU of the blend at a constant value. This constant BTU fuel gas can then be distributed throughout the plant to the various boilers, heaters, and gas-fired processes. In this case, the fuel gas BTU controller (AIC-1) becomes the cascade master of the makeup or diluent flow controller (FIC-1). Such a flow schematic of a typical blending control loop is shown in Figure 2.4d.

CONCLUSION

Using proven, available technology, a BTU flow rate loop can provide the control signal needed in such applications. In most combustion processes, the basic elements of such a control loop are an orifice flowmeter and a heating value detector that is fast enough to provide good response speed to process load variations.

Measuring the BTU flow rate provides a direct and accurate method of controlling and optimizing combustion processes.

Bibliography

Baker, R. C., *Flow Measurement Handbook*, Cambridge University Press, UK, 2000.

Cushing, M., The future of flow measurement, *Flow Control*, January 2000.

Desmeules, M., *Fundamentals of Gas Measurement*, Canadian Meter Company, Milton, Ontario, Canada, June 1999.

Eren, H., Flowmeters, *Survey of Instrumentation and Measurement*, S.A. Dyer, Ed., John Wiley & Sons, New York, 2001.

Feller, M. F., New Technology BTU Meter, *Meas. Control*, February 1993.

Foundos, A. P., Measuring heat release rate from fuel gases, *Instrum. Technol.*, ISA, Research Triangle Park, NC, 1977.

Foundos, A. P., On-line optimizing fuel gas composition variations, *Instrum. Technol.*, ISA, Research Triangle Park, NC, 1980.

Furness, R. A., Developments in pipeline instrumentation, *Pipe Line Rules of Thumb Handbook*, 4th ed., Gulf Publishing, Houston, TX, 1998.

Hardy, W. M., Process Analyzers—Predictions for the 1990s and Beyond, Paper #90–0456 at 1990 ISA Conference, New Orleans.

Lipták, B. G., *Optimization of Industrial Unit Processes*, 2nd ed., CRC Press, Boca Raton, FL, 1999.

Miller, R. W., *Flow Measurement Handbook*, 3rd ed., McGraw-Hill, New York, 1996.

Reineke, H. F., Patent no. 1,055, 259, Federal Republic of West Germany, 1957.

Spitzer, D. W., *Flow Measurement*, 2nd ed., ISA, Research Triangle Park, NC, 2001.

Yoder, J., Flowmeter shootout, part I and II: new technologies, *Control*, February and March 2001.

© 2003 by Béla Lipták

2.5 Cross-Correlation Flow Metering

B. G. LIPTÁK (1982, 1995) **H. M. HASHEMIAN** (2003)

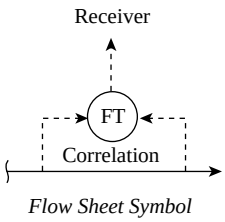

Flow Sheet Symbol

Current Applications	Pumped paper pulp, pneumatically conveyed coal dust, cement, grain, plastic granules, chalk, water flow in nuclear and industrial plants, and animal foodstuffs
Sizes	Practically unlimited
Cost	A 4-in 150 # mass flowmeter with epoxy-resin-lined, enameled steel pipe costs $6000. If the sensor costs are not considered, the electronic detector alone is around $2000. Nuclear power plant flow metering installations range from $25,000 to $50,000.
Partial List of Suppliers	Analysis and Measurement Services Corp. (www.ams-corp.com) Endress+Hauser Inc. (www.us.endress.com) Kajaani Electronics Ltd. (Finland)

The oldest and simplest methods of flow measurement are the various tagging techniques. Here, a portion of the flowstream is tagged at some upstream point, and the flow rate is determined as a measurement of transit time. Variations of this technique include particle tracking, pulse tracking, and dye or chemical tracing, including radioactive types. The advantages of tagging techniques include the ability to measure the velocity of only one component in a multicomponent flowstream without requiring calibration or pipeline penetration. For example, electromagnetic tagging of gas-entrained particles allows for the determination of their speed through the detection of their time of passage between two points that are a fixed distance from each other.

Flow metering based on correlation techniques[1,2] is similar in concept to the tagging or tracing techniques, because it also detects transit time. As illustrated in Figure 2.5a, any measurable process variable that is noisy (displays localized variations in its value) can be used to build a correlation flowmeter. The only requirement is that the noise pattern must persist long enough to be seen by both detectors *A* and *B* as the flowing stream travels down the pipe. Flow velocity is obtained by dividing the distance (between the identical pair of detectors) by the transit time. In recent years, the required electronic computing hardware, with fast pattern recognition capability, has become available. Consequently, it is feasible to build on-line flowmeters using this technique.[3]

The following process variables display persistent enough noise patterns (or local fluctuations) that correlation flowmeters can be built by using an identical pair of these sensors:

Density
Pressure
Temperature
Ultrasonics
Gamma radiation
Capacitive density
Conductivity

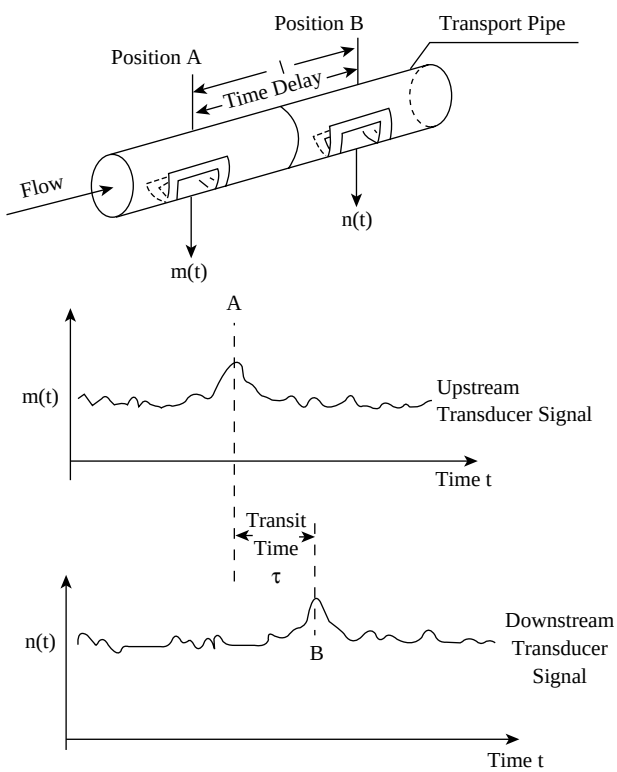

FIG. 2.5a
Cross-correlation flow metering.

© 2003 by Béla Lipták

Several of the above process variables (such as temperature,[4,5] gamma radiation, and capacitive density[6]) have been investigated as potential sensors for correlation flowmeters. One instrument has been developed that uses the principle of ultrasonic cross-correlation to measure heavy-water flow.[3] Others are available for paper pulp applications using photometric sensors and for solids flow measurement utilizing capacitance detectors (Figure 2.23v). For cross-correlation flowmeters applied in solids flow applications, refer to Section 2.23.

When fully developed, correlation flow metering can extend the ability to measure flow not only into the most hostile process environments but also into areas of multiphase flow and into three-dimensional flow vectoring.

NUCLEAR POWER PLANT APPLICATIONS

Most process variables fluctuate, so the outputs of most process sensors undergo variations in their output. These variations can also be exploited to obtain cross-correlation flow sensors. More specifically, process sensors that normally measure temperature, pressure, radiation, or other process variables can also be used to determine the velocity of fluid flow. This can be done passively by recording the sensor output for a period of time and extracting the fluctuating component of the output (called the AC signal). If a pair of sensors are installed in the same pipe at a known distance from each other, flow velocity can be obtained by cross-correlating the two AC signals from these two sensors. Once the fluid flow velocity is determined, the volumetric or mass flow rate can be calculated on the basis of the physical dimensions of the process piping and the properties of the fluid.

Determining the Transit Time

The principle of cross-correlation flow measurement is illustrated in Figure 2.5b, where a pipe is shown with two sensors installed some distance apart. Also shown in Figure 2.5b are the AC outputs of these two sensors. The output of one sensor is represented by $x(t)$, and the output of the other sensor is represented by $y(t)$. These output signals may be cross-correlated to identify the *transit time* between the two sensors. The transit time is the time required for the process fluid to travel between the two sensors. To obtain the fluid flow velocity, the transit time has to be divided by the distance between the two sensors.

To cross-correlate the outputs of two sensors, first the two output signals are multiplied by each other, after which the second signal is slowly shifted, a little bit at a time, toward the first signal until the two signals are superimposed. The averaged product of the two signals is then plotted as a function of the time shift. This plot will normally peak at a

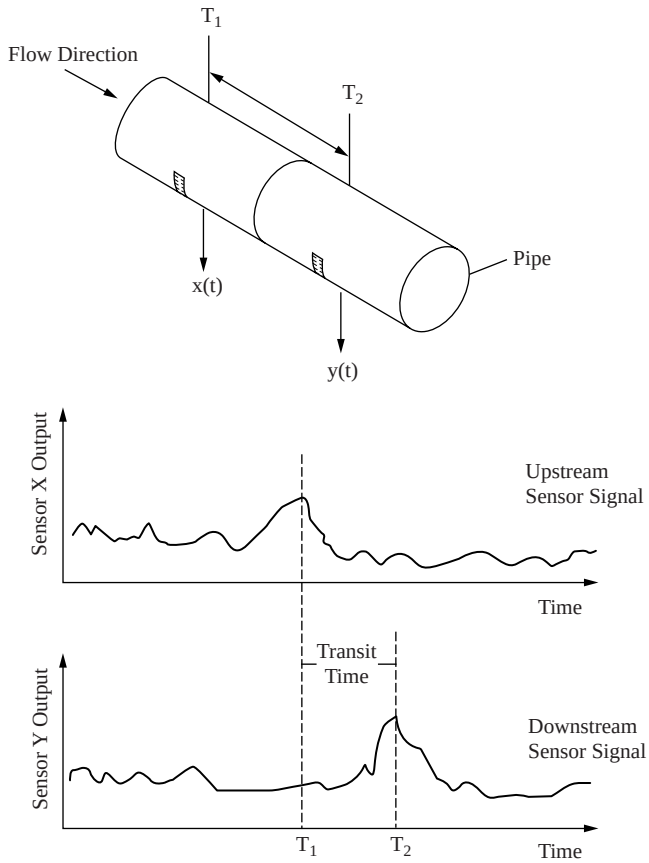

FIG. 2.5b
Illustration of principle of cross-correlation flow monitoring.

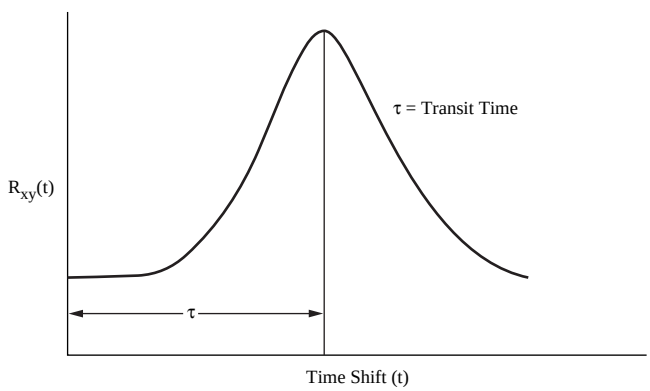

FIG. 2.5c
Cross-correlation plot and illustration of transit time.

time that is equal to the transit time, as illustrated in Figure 2.5c.

The cross-correlation function (R_{xy}) for the signals $x(t)$ and $y(t)$ is given by the following equation:

$$R_{xy}(t) = \int x(z)y(t+z)dz \qquad \textbf{2.5(1)}$$

© 2003 by Béla Lipták

In this equation, t is the time interval that one signal is shifted toward the other, and z is the integration variable.

The cross-correlation function, R_{xy}, will normally have values between +1.0 and −1.0, provided that x and y are constructed from mean-removed raw signals divided by their standard deviations. Values close to +1.0 indicate a good direct correlation between two signals, and values close to −1.0 indicate a good inverse correlation. Conversely, when there is little or no correlation between the two signals, the value of R_{xy}, will approach zero.

The transit time can also be obtained from plotting the phase between the two signals as a function of frequency. For this, the slope of the phase as a function of frequency is used to calculate the transit time as follows:

$$2\pi\Delta F\tau = \Delta\phi$$

$$\tau = \frac{\Delta\phi}{2\pi\Delta F} = \frac{\text{slope (Degrees/Hz)}}{360\text{ (Degrees)}} \qquad \textbf{2.5(2)}$$

where

τ = transit time (sec)
$\Delta\varphi$ = change in FFT phase (degrees)
ΔF = frequency band of highest coherence (Hz or $\sec^{-1}$) over which $\Delta\phi$ occurs
2π (radians) = 360°

To eliminate the effects of process variations that are not related to flow, the slope is calculated over the region of the phase spectrum where the two signals are most coherent. Figure 2.5d shows a phase vs. frequency plot and the calculation of the transit time. As shown by Equation 2.5(2) and Figure 2.5d, the transit time is calculated by dividing the slope of the phase plot by 360°.

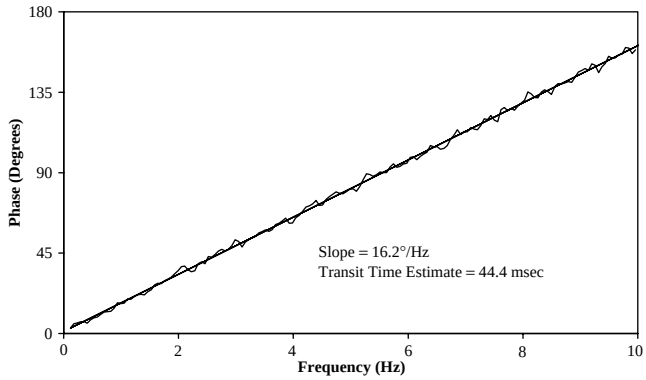

FIG. 2.5d
Phase plot and calculation of transit time.

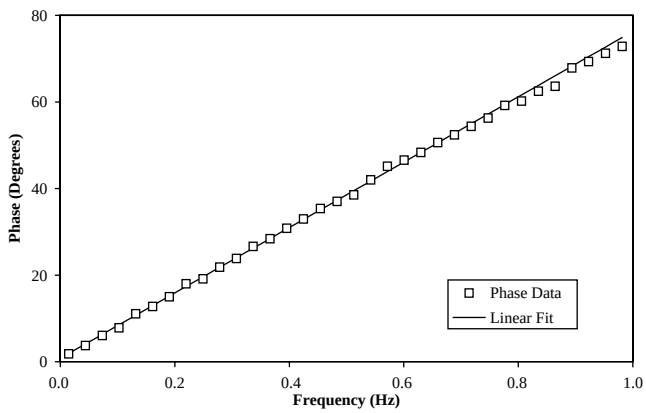

FIG. 2.5e
Cross-correlation phase plot for a pair of RTDs.

Reliability and Accuracy

The reliability of cross-correlation flow metering is improved if

1. The response times of the two sensors are similar and fast compared to the spectrum of the process and the transit time that must be resolved.
2. The correlation between the data does not occur at or after the break frequency of the sensor and/or the data acquisition system.
3. The information being correlated can be resolved from the effects of other process perturbations and noise.

In theory, any two sensors can be used to provide signals for cross-correlation flow measurements as long as the two sensors can register a process parameter that affects the output of both sensors. For example, signals from two temperature sensors (thermocouples, RTDs, and so forth) or two pressure sensors can be cross-correlated to determine fluid flow rate. Figure 2.5e shows a phase plot for two RTDs. This information was generated in a laboratory test loop where cross-correlation flow equipment and techniques were developed and validated. The plot shows the experimental data as well as the least-squares fit to the data. The least-squares fit provides the slope of the line that is then divided by 360° to obtain the transit time. Based on these laboratory experiments, it has been determined that the error in cross-correlation-based flow measurement is less than 3%.

Even dissimilar sensors, such as a temperature and a pressure detector, can be used for cross-correlation flow measurement if the temperature and pressure measurements are related.

Nuclear Power Applications

The cross-correlation technique of flow metering has been used successfully in nuclear power plants by using the thermal hydraulic fluctuations within the reactor coolant system, which are detectable by temperature, pressure, and radiation sensors. For example, the signals from temperature and neutron detectors have been cross-correlated to monitor the

© 2003 by Béla Lipták

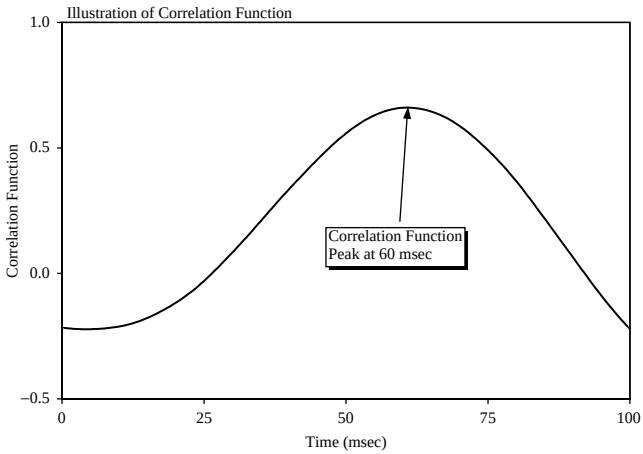

FIG. 2.5f

Plot of correlation function for a pair of signals from a thermocouple and a neutron detector.

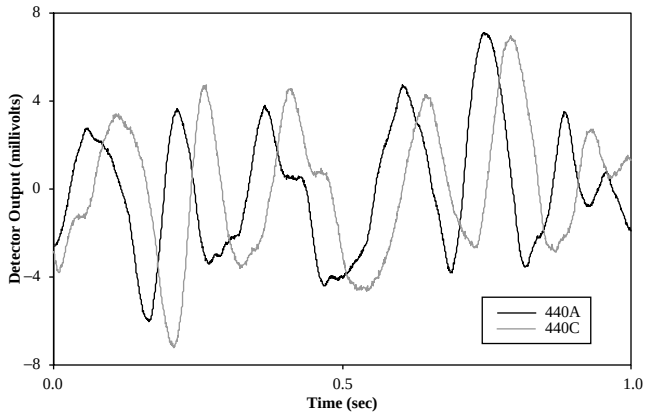

FIG. 2.5g

Examples of raw data for a pair of sensors used for cross-correlation flow measurements.

flow through the core. Figure 2.5f shows a cross-correlation plot for a thermocouple that is installed on top of the reactor core inside a pressurized water reactor (PWR) and a neutron detector located outside the reactor at a lower elevation than the thermocouple. This method is not normally used for flow measurements in nuclear power plants. Rather, it is used for monitoring flow rate changes and for detecting flow blockages within the reactor coolant system.

A more direct means of flow measurements in PWR plants is to cross-correlate the signals from a pair of nitrogen 16 (N-16) radiation detectors that are installed on the reactor coolant pipes. The N-16 detectors measure the gamma radiation produced in the reactor water by the neutron bombardment of oxygen-16. When oxygen-16 is bombarded by fast neutrons, an unstable isotope of nitrogen is produced, which is N-16. It decays rapidly while emitting gamma radiation. Even though it decays rapidly, N-16 activity lasts long enough to measure the gamma radiation as the water circulates in the reactor coolant loop. This method of flow measurement is often referred to as *transit-time flow measurement (TTFM)*. Figure 2.5g shows two raw data records for a pair of N-16 detectors in a PWR plant.

Data accumulated for a period of only one second is shown, although data can be collected for periods of 1 or 2 h if high measurement accuracy is desired. If the purpose of the measurement is only to detect sudden flow changes or blockages, then shorter data recording periods are adequate.

The TTFM System

The TTFM system (Figure 2.5h) includes a signal conditioning circuit shown in Figure 2.5h. This circuitry is used to extract the AC signals that are cross-correlated for flow measurement. The raw signal typically contains a DC component on which the AC signal of interest is superimposed.

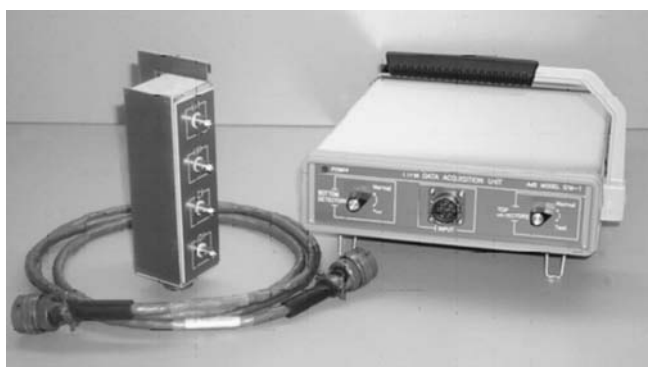

FIG. 2.5h

Photograph of TTFM system. (Courtesy of Analysis and Measurement Services Corp. [AMS].)

As shown in Figure 2.5i, the DC component of each signal is removed by a highpass filter or by a bias that is added to or subtracted from the signal. The remaining component (the AC signal) is then amplified and sent through a lowpass filter to remove the extraneous noise and to provide for anti-aliasing. A computer with a built-in analog-to-digital converter (A/D) then samples the signals and performs the cross-correlation to identify the transit time and calculate the flow. Typically, the cross-correlation analysis is performed in both the time domain, using the cross-correlation plot, and in the frequency domain, using the phase plot, and the results are averaged to provide the fluid flow velocity.

The TTFM software not only collects the data, it performs data qualification and statistical analysis to ensure that the signals are suitable for analysis, the sensors have comparable response times, and the cross-correlated AC signals have the required statistical and spectral properties. Figure 2.5j shows a block diagram of the entire TTFM system.

© 2003 by Béla Lipták

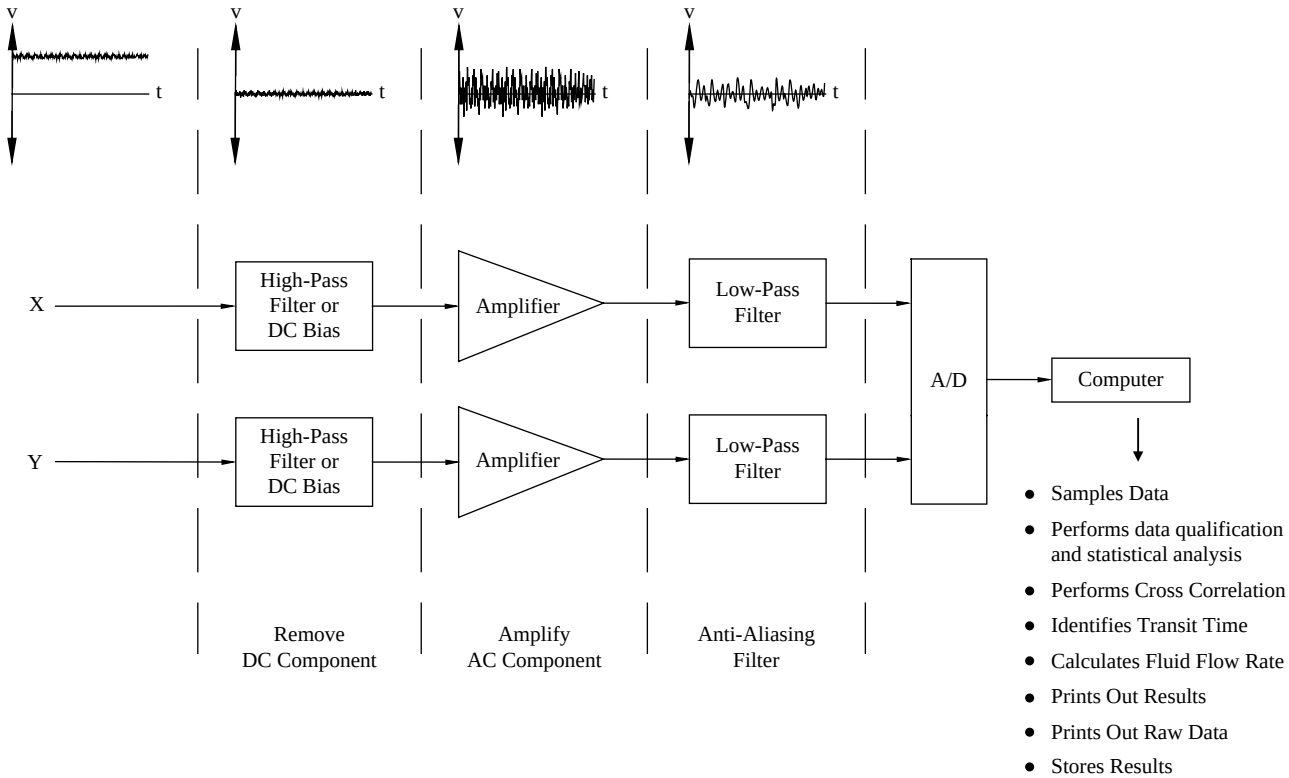

FIG. 2.5i
Block diagram of data acquisition system of TTFM.

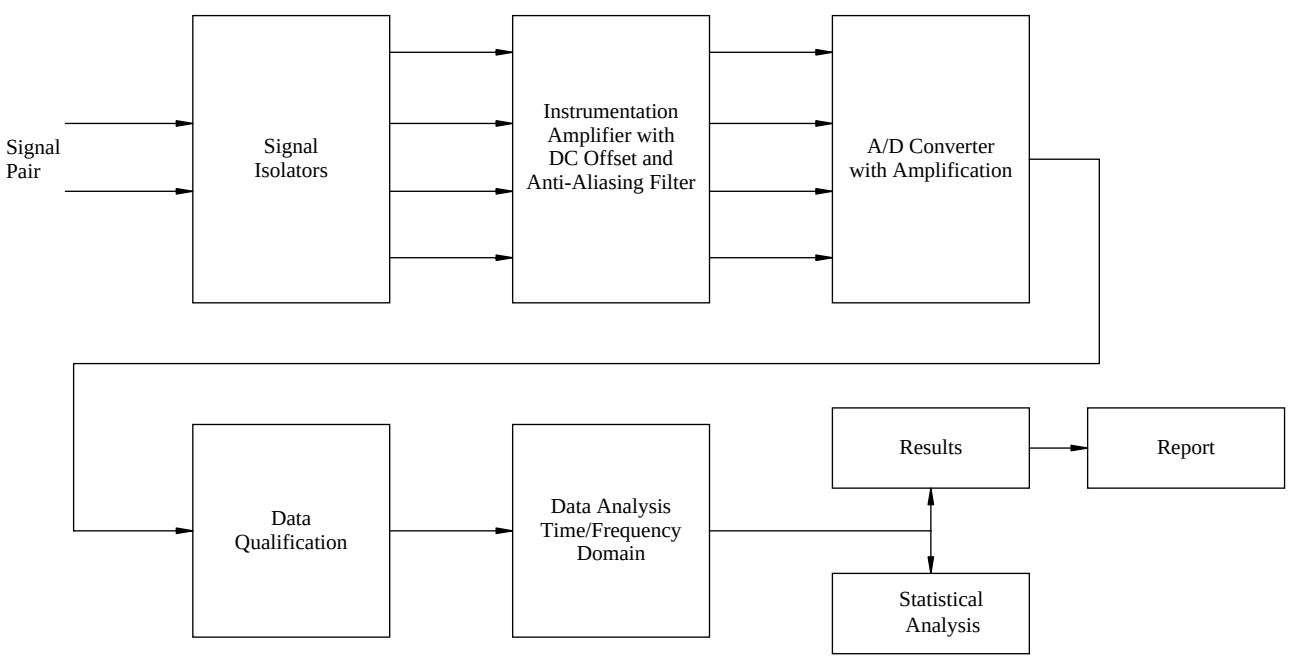

FIG. 2.5j
Block diagram of TTFM system.

© 2003 by Béla Lipták

References

1. Porges, K. G., On-line correlation flowmetering in coal utilization plants, in *Proc. 1980 Symposium on Instrumentation and Control of Fossil Energy Processes,* June 9–11, 1980, Virginia Beach, VA.
2. Porges, K. G., Correlation flowmetering review and application, in *Proc. 1979 Symposium on Instrumentation and Control for Fossil Energy Processes,* August 20–22, 1979, Denver, CO.
3. Flemans, R. S., A new non-intrusive flowmeter, *Transactions, Flow Measurement Symposium,* NBS, February 23–25, 1977.
4. Ashton, M. W. and Bentley, P. G., Design study for on-line flow measurement by transit time analysis of temperature fluctuations, in *Proc. Conference on Industrial Measurement Techniques for On-Line Computers,* June 11–13, 1968, London.
5. Boonstoppel, F., Veltman, B., and Vergouwen, F., The measurement of flow by cross-correlation techniques, in *Proc. Conference on Industrial Measurement Techniques for On-Line Computers,* June 11–13, 1968, London.
6. O'Fallon, N. M., Review of the state-of-the-art of flow and analysis instruments, in *Proc. 1977 Symposium on Instrumentation and Control for Fossil Demonstration Plants,* July 13–15, 1977, Chicago, IL.

Bibliography

Beck, M. S., Calvert, G., Hobson, J. H., Lee, K. T., and Mendies, P. J., Flow measurement in industrial slurries and suspensions using correlation techniques, *Trans. Inst., Meas. and Control,* 4(8).

Espina, Peter G., Ultrasonic clamp-on flowmeters—have they finally arrived? *Flow Control Magazine,* January 1997.

Estrada, H., An assessment of the integrity and accuracy of feedwater flow and temperature measurements, Electric Power Research Institute, in *Proc. Nuclear Plant Performance Improvement Seminar,* Asheville, NC, 1996.

Hashemian, H. M. et al., Advanced Instrumentation and Maintenance Technologies for Nuclear Power Plants, U.S. Nuclear Regulatory Commission, NUREG/CR-5501, August 1998.

Hashemian, H. M., On-Line Testing of Calibration of Process Instrumentation Channels in Nuclear Power Plants, U.S. Nuclear Regulatory Commission, NUREG/CR-6343, November 1995.

Kirimaa, J. C. J., Cross-Correlation for Pulp Flow Measurement, ISA/93 Conference, Chicago, IL, September 1993.

Mersh, F., Speed and Flow Measurement by an Intelligent Correlation System, Paper #90–0632, 1990 ISA Conference, New Orleans.

Robinson, C., Obstructionless flowmeters: smooth sailing for some, rough passage for others, *InTech,* 33(12), 33–36, 1986.

Spitzer, D. W., *Industrial Flow Measurement,* ISA, Research Triangle Park, NC, 1984.

© 2003 by Béla Lipták

2.6 Elbow Taps

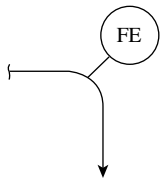

W. H. HOWE (1969) **B. G. LIPTÁK** (1982, 1995) **I. H. GIBSON** (2003)

Design Pressure	Limited by piping design class only
Operating Temperature Range	–330 to +1100°F (–200 to +600°C)
Fluids	Liquids, vapors, or gases
Differential Pressure	0- to 10-in water column (0 to 2.5 kPa)
Sizes	0.5 to 20 in (12 to 500 mm)
Inaccuracy	±2 to ±10% FS
Cost	Approximately $1000 plus value of elbow and measuring device (usually a differential-pressure transmitter)
Partial List of Suppliers	Normally fabricated on site

Flow measurement using elbow taps depends on the detection of the differential pressure developed by centrifugal force as the direction of fluid flow changes in a pipe elbow. Taps are located on the inner and outer radii in the plane of the elbow. The pressure taps are located at either 45° or 22.5° from the inlet face of the elbow (Figure 2.6a).

A SIMPLE FLOWMETER

Elbow taps are easy to implement, because most piping configurations already contain elbows in which taps can be located. This guarantees an economical installation and results in no added pressure loss. The measurement introduces no obstructions in the line. Accumulation of extraneous material in the differential-pressure connections can plug the elbow taps. Therefore, they should be purged if the process fluid is not clean.

As is the case with other head-type primary flow measurement devices, the differential pressure developed by a given flow is precisely repeatable. However, the flow coefficient of an elbow tap calculated from the physical dimensions of the pipe is generally considered reliable to only ±5 to ±10%. This is quite satisfactory for many flow control applications where repeatability is the primary consideration. If absolute accuracy is desired, a more precise flowmeter should be used, or the elbow tap readings should be calibrated, preferably in place and using the working fluid. Not enough data exist to establish precise correction factors for effects of upstream disturbances, viscosity, and roughness in pipe and elbow surfaces, and no published standards are available.

Elbow taps develop relatively low differential pressures. For this reason, they cannot be used for measurement of low-velocity streams. Typically, water flowing at an average velocity of 5 ft/sec (1.5 m/sec), roughly 200 GPM in a 4-in. pipe (45 m^3/h in a 100-mm pipe) through a "short-radius" elbow with a centerline radius equal to the pipe diameter develops about 10 in. of water differential pressure (2.5 kPa). This is approximately the minimum full scale value recommended for reliable measurement. Taps in long radius pipe or tube bends do not develop sufficient differential pressure for good flow measurement at low flow velocities.

In comparison with an elbow installation, an orifice will generate a head (1.4 to 2.2) $(1-\beta^4)/\beta^4$ higher at the same flow rate. For example, for $\beta = 0.65$, the orifice head developed will be approximately 6.5 times that of a short-radius elbow.

LOCATION AND SIZE OF TAPS

The upstream piping is a factor in the installation of elbow taps. It is recommended to provide at least 25 pipe diameters of straight pipe upstream and 10 diameters downstream. The tap holes should be perpendicular to the surface of the elbow and slightly rounded at the pipe surface, with no burrs

© 2003 by Béla Lipták

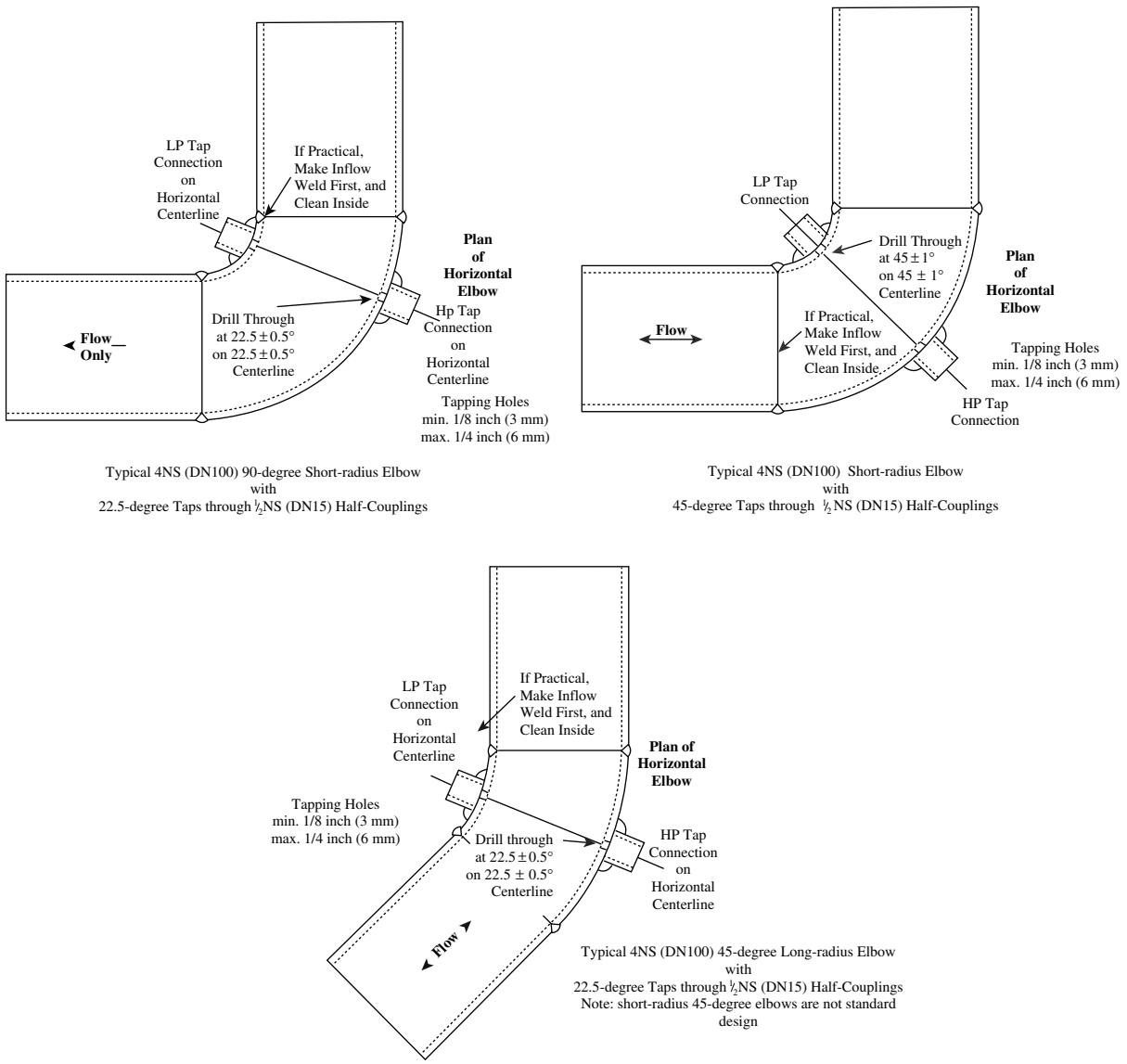

FIG. 2.6a
Alternate tap locations in elbow flowmeter designs.

or protrusions. Jig setting the tap connections using a rod across the elbow to ensure a common axis is recommended.

Tap hole diameter should not exceed 0.125 of the pipe diameter. Elbows may be flanged with the elbow diameter equal to the pipe diameter or, more commonly, welded. With a welded installation, it is preferable to make the upstream weld first, because this permits access to clean up the more critical upstream joint.

An elbow of smaller diameter than the pipe, with a reducer between pipe and elbow, has the advantage of higher differential for a given flow. Threaded elbows with the flow section larger than the pipe develop less differential pressure and thereby increase the error.

The flow coefficient of a pipe elbow can be reliably determined only if the inside surface of the elbow is smooth. The elbow should be precisely aligned with the pipe, making sure that no gaskets or weld metal are protruding into the flowing stream either at the inlet or outlet of the elbow.

When selecting an existing elbow for flow measurement purposes, it is preferable to pick one that is located between two horizontal pipe sections. This will guarantee that the pressure taps will be horizontal, and material will not accumulate in them. If the elbow were located between a horizontal and a vertical pipe section, the pressure tap on the inner radius would slope upward, and the one on the outer radius would slope downward.

As the differential-pressure instrument is piped to these taps, this piping will not be self-draining. The high and low points in the connecting piping will tend to trap either the vapors on liquid services or the liquid condensate on vapor services. As the total pressure differential to be measured is already low, this interference can make the installation unsatisfactory.

© 2003 by Béla Lipták

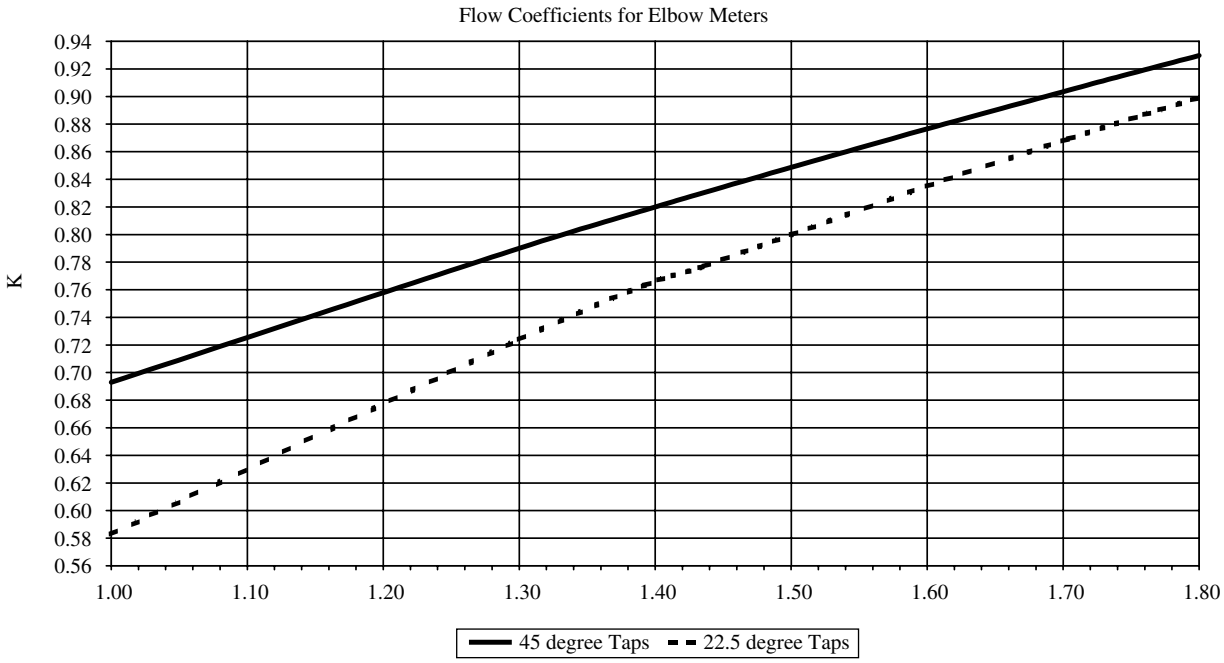

FIG. 2.6b
Elbow flowmeter flow coefficients.

Some tests suggest that the 22.5° tap locations provide more stable and reliable readings and are less affected by upstream pipe configuration. They also give 7 to 15% higher differential than the 45° values. Spink[5] gives a set of correlated experimental data for both 45° and 22.5° measurements. The 22.5° data in Figure 2.6b is adapted from this information.

For 45° tap orientation, the flow coefficient (K) is given by Murdock[1,2] as

$$K = \sqrt{\frac{r_b}{2D}} + \frac{6.5\sqrt{\frac{r_b}{2D}}}{\sqrt{\mathrm{Re}_D}} = \sqrt{\frac{r_b}{2D}} * \left(1 + \frac{6.5}{\sqrt{\mathrm{Re}_D}}\right) \pm 4\% \qquad \textbf{2.6(1)}$$

using consistent units, where the pipe Reynolds number (Re_D) is greater than 10^4 and $r_b/D > 1.25$. Note that, for short-radius elbows, this ratio is 1.0, and hence outside the limit, r_b, is the centerline radius of the elbow, and D is the actual bore of the elbow, measured in four planes and averaged.

The second term is 6.5% at the minimum Reynolds number of 10^4 and negligible above 10^6. Later work by Murdock[3] suggests a slightly lower value,

$$K = 0.98\sqrt{\frac{r_b}{2D}} \pm 6\% \text{ for Reynolds number above } 10^5 \qquad \textbf{2.6(2)}$$

Units

Symbols used are consistent with ISO 5167.

C	Discharge coefficient in orifice equations
D	Pipe diameter (at plane of elbow tappings)
K	Discharge coefficient term for elbow
p_{f1}	Absolute pressure upstream of elbow
p_{lp}	Absolute pressure at inner tapping of elbow
p_{hp}	Absolute pressure at outer tapping of elbow
q_m	Mass flow rate
r_b	Radius of curvature of elbow at centerline
Re_D	Reynolds number referred to D
ε	Expansion factor (in U.S. standards, Y)
ρ	Density
$_1$(subscript 1)	Upstream conditions

The factor K replaces the term $C/\sqrt{1-\beta^4}$, and D replaces d in the standard orifice equations (see Section 2.15).

$$q_m = \frac{C}{\sqrt{1-\beta^4}}\varepsilon_1 \frac{\pi}{4} d^2 \sqrt{2\Delta p \rho_1} \quad \text{to give}$$

$$q_m = K\varepsilon_1 \frac{\pi}{4} D^2 \sqrt{2(p_{hp} - p_{lp})\rho_1} \qquad \textbf{2.6(3)}$$

For gas flow, the gas expansion factor has not been heavily studied; a single set of data on air suggests $\varepsilon = 1 + 1.3((p_{hp} - p_{lp})/p_{f_1})^2$ where the pressure measurements are in consistent units.

© 2003 by Béla Lipták

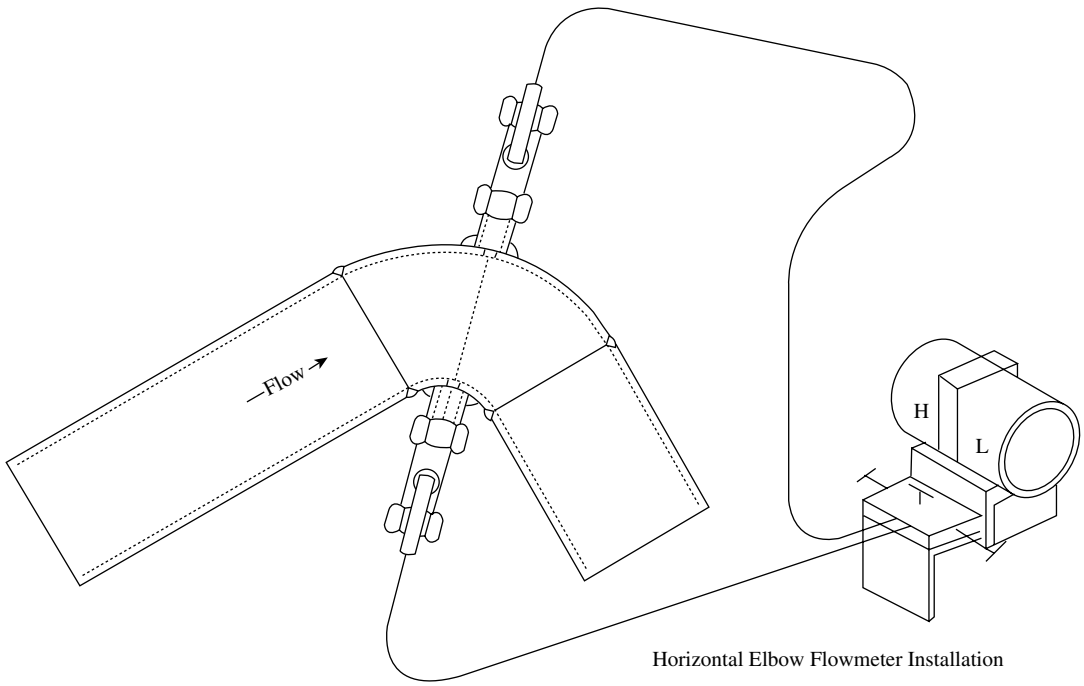

FIG. 2.6c
Horizontal elbow flowmeter installation.

The pressure differential term is so small that $\varepsilon = 1$ is within the normal limits of error in many cases. The coefficient values for 22.5° taps are quoted by Spink.

For an elbow tap installation, complete with d/p transmitter and three-valve manifold, refer to Figure 2.6c.

OTHER d/p-PRODUCING ELEMENTS

In addition to elbow taps, the differential pressure produced by centrifugal forces can also be converted into flow readings by other configurations. These include the Winter-Kennedy taps installed in the scroll case of hydraulic turbines. Another design is the full-circle loop with taps located at the midpoint of the loop. It is claimed that this design provides high accuracy and minimum sensitivity to upstream piping configuration.

References

1. Wallace, A., Lansford, Engineering Experiment Station, University of Illinois, Urbana, IL, Bulletin #289, 1936.
2. Murdock, J. W., Foltz, C. J. and Gregory, C., Performance Characteristics of Elbow Flowmeters, ASME WAM Paper 63-WA-17, 1963.
3. Murdock, J. W., Foltz, C. J. and Gregory, C., *J. Basic Eng.,* 86, 498–506, 1964.
4. Miller, R.W., *Flow Measurement Engineering Handbook,* 3rd ed., McGraw-Hill, New York, 1996.
5. Spink, L. K., *Principles and Practice of Flow Engineering*, 9th ed., The Foxboro Co., Invensys Systems, Inc., Foxboro, MA, 1967.

Bibliography

Hauptmann, E. G., Take a second look at elbow meters for flow monitoring, *Instrum. Control Syst.,* 47–50, 1978.
Moore, D. C., Easy way to measure slurry flowrates, *Chemical Eng.,* 96, 1972.

© 2003 by Béla Lipták

2.7 Flow Switches

B. G. LIPTÁK (1982, 1995) **W. H. BOYES** (2003)

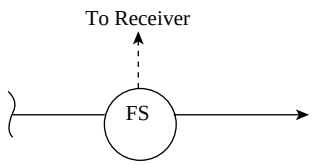

Types of Designs

A. Bypass or differential-pressure
B. Capacitance or RF inductance
C. Hot wire anemometer
D. Paddle, vane, or rotor
E. Thermal
F. Ultrasonic (including Doppler)
G. Valve body
H. Variable area or piston
I. Microwave
J. Surface charge

Types of Services

0. Liquids (flow or no-flow)
1. Liquids (adjustable high- or low-flow)
2. Gases, vapors (adjustable high- or low-flow)
3. Solids (flow/no-flow, some adjustable)

Costs

Small oil, air, and water switches (types A and D) can be obtained for $50 to $150; paddle-type flow switches for air ducts cost $150, and for water service through 1-in (25-mm) NPT fitting and stainless-steel construction, $375; types B, E, and H units range from $150 to $800 in small sizes and standard materials; types C and F start at approximately $500 and range to over $1000; solids flow switch types I and J cost around $1000; Type G in 1-in (25-mm) size and bronze construction is $120, in stainless steel $400; a 2-in (50-mm) unit in these materials is $300 and $600, respectively.

Partial List of Suppliers

A. Bypass or differential-pressure
Meriam Instrument (www.meriam.com) (A-1, 2)
Mid-West Instrument (www.midwestinstrument.com) (A-1, 2)
W.E. Anderson Div. of Dwyer (www.dwyer-inst.com) (A-2, D-1)
CTE Chem Tec (www.chemtec.com) (A-0, 1, 2)

B. Capacitance or RF inductance
ABB Instrumentation (www.abb.com) (B-3)
Babbitt International Inc. (www.babbittlevel.com) (B-3)
Delta Controls Corp. (www.deltacnt.com) (B-0, D-1)
Endress+Hauser Inc. (www.us.endress.com) (B-0, F-3)
Magnetrol International (www.magnetrol.com) (B-0)
Princo Instruments Inc. (www.princoinstruments.com) (B-1, 3)
Robbins and Myers Inc., Moyno Div. (www.moyno.com) (B-0)
SOR Inc. (www.sorinc.com) (B, D, H-1)

C. Hot wire anemometer
Kurz Instruments Inc. (www.kurzinstruments.com) (C-2)
TSI Inc. (www.tsi.com) (C-2)
JLC International (www.jlcinternational.com) (C-2)

D. Paddle, vane, or rotor
Delta Controls Corp. (www.deltacnt.com) (B-0, D-1)
W.E. Anderson Div. of Dwyer (www.dwyer-inst.com) (A-2, D-1)
Aqualarm (www.jam.uk.com) (D-1)
CTE Chem Tec Equipment Co. (www.chemtec.com) (D-1, 2)

© 2003 by Béla Lipták

Custom Services (D-0)
H.G. Dietz Co. (D-1, 2)
Gems Sensors Inc. (www.gemssensors.com) (D-1, 2)
Harwil Corp. (www.harwil.com) (D-1)
Proteus Industries Inc. (www.proteusind.com) (D-1)
Revere Transducers (www.reveretransducers.com) (D-1)
Kobold Instruments Inc. (www.koboldusa.com) (D-1, 2)
Johnson Controls (www.johnsoncontrols.com) (D-1, 2)
Oilgear Co. (www.oilgear.com) (D-1)
Omega Engineering Inc. (www.omega.com) (D, F, H-1, 2)
OPW Div. of Dover Corp. (www.opw-fc.com) (D-1)
SOR Inc. (www.sorinc.com) (B, D, H-1)
Universal Flow Monitors Inc. (www.flowmeter.com) (D, H-1)
Bindicator Div. of Venture Meas. (www.bindicator.com) (D-3)
Magnetrol International (www.magnetrol.com) (D-1, 2)
Lake Monitors (www.lakemonitors.com) (D-0, 1)
George Fischer Signet (www.gfsignet.com) (D-0, 1)

E. Thermal
Delta M Corp. (www.deltam.com) (E-1, 2)
Hydril Co. (www.hydril.com) (E-0)
E-T-A Control Instruments (www.etacbe.com) (E-1, 2)
FCI Fluid Components Inc. (www.fluidcomponents.com) (E-1, 2)
Intek Inc. (www.intekflow.com) (E-1, 2)
Turck Inc. (www.turck-usa.com) (E-0, 1)
McMillan Co. (www.mcmillancompany.com) (E-0, 1)
IFM Efector (www.ifmefector.com) (E-0, 1)
Magnetrol International (www.magnetrol.com) (E-0, 1)
Eldridge Products Inc. (www.epiflow.com) (E-0, 1, 2)
Sierra Instruments Inc. (www.sierrainstruments.com) (E-0, 1, 2)
Kurz Instruments (www.kurzinstruments.com) (E-0, 1, 2)

F. Ultrasonic (including Doppler)
Brooks Instrument Div. of Emerson (www.emersonprocess.com) (F-1, H-1, 2)
Cosense Inc. (www.cosense.com) (F-0)
Endress+Hauser Inc. (www.us.endress.com) (B-0, F-3)
Thermo MeasureTech (www.thermomeasuretech.com) (F-1, 3)
Omega Engineering Inc. (www.omega.com) (D, F, H-1, 2)
Zi-Tec Instrument Corp. (F-1, 2)
Magnetrol International (www.magnetrol.com) (F-3)
Controlotron Corp. (www.controlotron.com) (F-0, 1)

G. Valve body
Hedland Inc. (www.hedland.com) (G-1, 2)
Magnetrol International (www.magnetrol.com) (G-1)
Malema Inc. (www.malema.com) (H-0, 1)
ERDCO Engineering Corp. (www.erdco.com) (H-0, 1)
Lake Monitors (www.lakemonitors.com) (G-1, 2)
CTE Chem Tec (www.chemtec.com) (G-0, 1, 2)

H. Variable area or piston
Brooks Instrument Div. of Emerson (www.emersonprocess.com) (F-1, H-1, 2)
ABB Instrumentation (www.abb.com) (H-1, 2)
Flow & Level Controls (E-1, 2, 3)
ICC Federated (H-1, 2)
SK Products by McCrometer (www.mccrometer.com) (H-1, 2)
Krohne America Inc. (www.krohneamerica.com) (H-1)
Omega Engineering Inc. (www.omega.com) (D, F, H-1, 2)
Orange Research (www.orangeresearch.com) (H-1)
SOR Inc. (www.sorinst.com) (B, D, H-1)
Universal Flow Monitors Inc. (www.flowmeter.com) (D, H-1)

I. Microwave
AM Sensors Inc. (I-3)
Monitor Technologies (www.monitortech.com) (I-3)

© 2003 by Béla Lipták

Magnetrol International (www.magnetrol.com) (I-3)
ThermoRamsey (www.thermoramsey.com) (I-3)

J. Surface charge
Auburn Systems LLC (www.auburnsystems.com) (J-3)

Flow switches are used to determine if the flow rate is above or below a certain value. This value (the setpoint) can be fixed or adjustable. When the setpoint is reached, the response can be the actuation of an electric or pneumatic circuit. When the flow switch is actuated, it will stay in that condition until the flow rate moves back from the setpoint by some amount. This difference between the *setpoint* and the *reactivation point* is called the switch *differential*. The differential can be fixed or adjustable. If the differential is small, the switch is likely to cycle its control circuit as the flow fluctuates around its setpoint.

In certain applications, a manual reset feature is desirable. This will guarantee that, once the switch is actuated, it will not be allowed to return to its preactuation state until manually reset by the operator. This feature is designed to require the operator to review and eliminate the cause of the abnormal flow condition before resetting the switch.

All instruments that can measure flow can also be used as flow switches. On the other hand, if only a flow switch is required for a particular application, the installation of indicating or transmitting devices cannot be economically justified. Therefore, in this section, only the direct flow switches will be discussed. Indirect devices, such as differential-pressure switches piped around orifice plates and receiving switches connected to the output signals of transmitters, are not covered.

DESIGN VARIATIONS

The least expensive and therefore the most widely used are the various paddle-type devices. At "no flow," the paddle hangs loosely in the pipe in which it is installed. As flow is initiated, the paddle begins to swing upward in the direction of the flow stream. This deflection of the paddle is translated into mechanical motion by one of several techniques, including a pivoting cam, a flexure type, or a bellows assembly. The mechanical motion causes the switch to open or close. If a mercury switch is used, the mechanical motion drives a magnetic sleeve into the field of a permanent magnet that trips the switch. A hermetically sealed switch will be directly actuated by the permanent magnet as it moves up or down according to the paddle movement. If a microswitch is used, the translated motion will cause direct switch actuation.

The range and actuation point of paddle switches can be changed and adjusted by changing the length of the paddle. For any given pipe size, the actuation flow rate decreases as the paddle length increases.

Paddle-type flow switches are sensitive to pipeline turbulence, pipeline vibration, and installation configuration. For these reasons, it is advisable to provide them with the equivalent of a 10-pipe-diameter straight upstream run, to use dampers if pipe vibration or pulsating flow is expected, and to readjust their settings if they are to be mounted in vertical upward flow lines. The conventional paddle-type designs are incapable of distinguishing low flow velocities from no-flow conditions. Therefore, if lower flows are to be detected, the folding circular paddle should be used (Figure 2.7a), which permits the full diameter paddle to fold back upon itself to minimize pressure drop.

In smaller pipelines where it is desired to provide local flow indication, the variable-area-type flow switches can be considered in addition to the flow switch action. If the vertical upward flow configuration of the rotameter design is not convenient from a piping layout point of view, the circular swinging vane design, illustrated in Figure 2.7b, can be considered. In existing systems, the clamp-on-type ultrasonic liquid flow switch can be a convenient solution, because it does not require process shutdown or pipe penetration. If the purpose of the flow switch is to protect pumps from running dry, the wafer-type capacitance insert unit is a good choice (Figure 2.7f).

Flow switch reliability is increased by the elimination of moving parts so that pipe vibrations or fluid flow pulses will

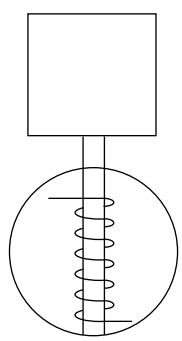

FIG. 2.7a
Folding paddle switch.

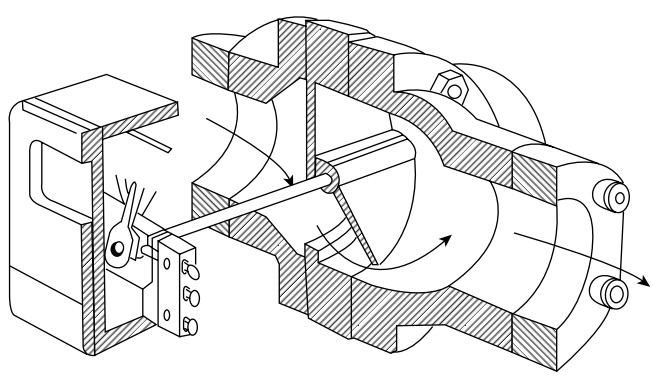

FIG. 2.7b
Swinging vane flow switch.

© 2003 by Béla Lipták

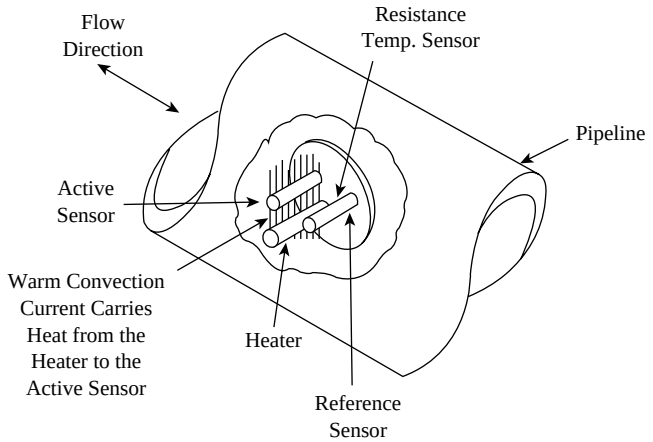

FIG. 2.7c
Thermal flow switch.

TABLE 2.7d
Minimum Settings for Flow Switches

	Minimum Velocity in ft/min (m/min)	
Flow Switch Type	*Air*	*Water*
Thermal	10 (3)	0.5 (0.15)
Variable Area	300 (91)	20 (6)
Ultrasonic	—	60 (18)
Paddle	300 (91)	60 (18)

not cause erroneous switch actuation. One of the most popular solid-state designs is the thermal flow switch. All heat-actuated flow switches sense the movement or stoppage of the process stream by detecting the cooling effect (temperature change) on one or more probes. They are available both in the flow-through and in the probe configuration. One design consists of a heater probe and two sensor probes connected in a Wheatstone bridge. When the flow stops, an imbalance in the bridge circuit occurs, as illustrated in Figure 2.7c. The main advantage of this design is its ability to detect very low flow velocities (Table 2.7d). Its main limitation is that it cannot respond instantaneously to flow changes. Depending on switch adjustments and on type of process fluid, the speed of response will vary from 2 sec to 2 min.

The valve body-type flow switches are built into a pipe fitting that resembles the body of a single seated globe valve. A flow disk is allowed to move in a vertical direction within what is normally considered the valve seat. A magnetic sleeve is mounted above the flow disk and, as the disk is lifted upward due to initiation of flow, a mercury switch is actuated by the movement of the magnetic sleeve into the field of the externally mounted permanent magnet.

A bypass-type switch (Figure 2.7e) has an externally adjustable vane that creates a differential pressure in the flow stream. This differential pressure forces a proportional flow through the tubing that bypasses the vane. A piston retained by a spring is in the bypass tubing and will move laterally

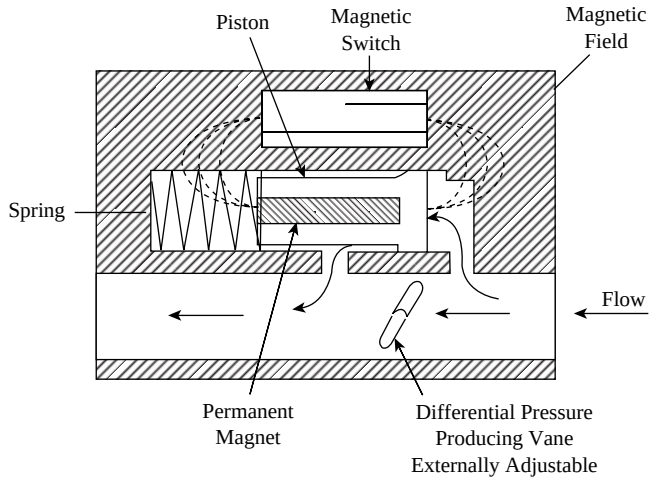

FIG. 2.7e
Bypass flow switch.

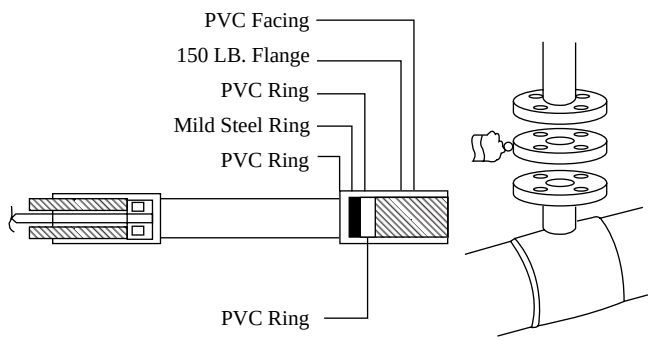

FIG. 2.7f
Capacitance-type flow/no-flow switch. (Courtesy of Endress + Hauser Inc.)

as flow increases or decreases; the piston's movement actuates a switch. Bypass flow switches can be used for fairly low flow rates, and their ability to be externally adjusted is a very desirable feature.

Capacitance-type ring sensors can detect the absence or presence of liquids or slurries, which usually relates to flow/no-flow conditions. This can prevent pumps from running dry or cavitating. The ring sensor (Figure 2.7f) is a capacitance switch that fits between two flat-faced flanges in standard pipe sizes between 2 and 8 in. (50 and 200 mm). When the ring sensor contains air (no-flow condition), it detects a dielectric constant of 1. When flow starts, it detects the dielectric constant of the flowing fluid, which is greater than 1, which causes a corresponding increase in radio frequency (in the megahertz range) current flow. The circuitry detects this current flow and operates the switch accordingly. An adjustable time delay of 0 to 20 sec is provided to protect from premature shutdowns. The construction materials are usually PVC and steel, with the electronics housed in explosion-proof or water-tight aluminum or thermoplastic housing. The operating temperature range for the standard ring sensor is 0 to 212°F (–18 to 100°C).

© 2003 by Béla Lipták

SOLIDS FLOW SWITCHES

In pneumatically conveyed or gravity-flow-type solids handling systems, it is important to quickly detect blockages or other abnormal conditions, such as feed loss, bin bridging, cyclone overflow, or the rupture of baghouse filters. The flows of certain powders (such as flyash, cement, or alumina) are particularly difficult to detect. Level sensors; tilt switches; and capacitance, radiation, sonic, and optical devices have been used in the past to detect abnormal flow conditions. In addition to these, one can also measure the flow rate of these solids' flows by the following techniques.

One solids flow switch, the "Triboflow," collects, on its probe surface, the static charges of the solid particles passing over its surface. The resulting current is related to the flow rate of solids. These probes are sensitive enough to detect flow increases as small as what results from baghouse rupture. These probe-type solids flow switches are inexpensive and can be installed in hazardous areas.

Microwave switches detect the flow of solids by detecting motion or the absence of it. In the microwave-type motion detector, the transducer emits a 24-GHz signal into the flowing solid stream and analyzes the reflected frequency (Doppler effect) to determine the speed of the object that reflected it. The sensitivity of the solids flow switch is adjustable, so it might be used to detect flow/no-flow or trip at a velocity as low as 6 in./min (15 cm/min) when the pipe is full or at a velocity of one particle every 5 sec in a free-falling gravity flow system. Units are available in aluminum or stainless steel. They can be connected to a pipe by a coupling or flange



FIG. 2.7g
Microwave solids flow switch, flanged. (Courtesy of ThermoRamsey Inc.)

(see Figures 2.7g and 2.23w), or they can view through windows or nonmetallic walls without any openings. The units are intrinsically safe and can be used at working pressures up to 15 PSIG (1 bar). The switch can also observe motion at a distance of several feet from the detector and can tolerate 0.5 in of nonconductive coating buildup or 0.1 in of conductive coating buildup.

Bibliography

Clark, W. J., *Flow Measurements*, Pergamon Press, New York, 1967.

Flow switches, *Meas. Control*, 1991.

Lipták, B. G., On-line Instrumentation, *Chemical Eng.*, 1986.

Spink, L. K., *Principles and Practice of Flow Engineering*, 9th ed., The Foxboro Co., Invensys Systems, Inc., Foxboro, MA, 1967.

Spitzer, D. W., *Flow Measurement*, 2nd ed., ISA Press, Research Triangle Park, NC, 2001.

Spitzer, D. W., *Industrial Flow Measurement*, ISA Press, Research Triangle Park, NC, 1991.

Yoder, J., Product roundup, Part 3 of 3, *Control*, 2002.

© 2003 by Béla Lipták

2.8 Jet Deflection Flow Detectors

D. S. KAYSER (1982) **B. G. LIPTÁK** (1995, 2003)

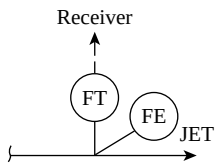

Flow Sheet Symbol

Maximum Process Pressure	10 PSIG (0.7 bar)
Design Temperature	450°F (232°C) standard and up to 1200°F (650°C) special
Standard Materials	Type 316 stainless steel
Connection and Insertion	Standard connection is 3 in. flanged; insertion depth is adjustable from 0 to 60 in. (0 to 1.5 m).
Air (Nitrogen) Requirement Pressure	10 to 90 PSIG (0.7 to 6.2 bar) over process pressure
Flow	2.5 and 5.0 SCFM (71 to 142 l/min)
Velocity Ranges	0 to 50 ft/sec and 0 to 85 ft/sec (0 to 15 m/sec and 0 to 26 m/sec)
Output Differential Range	0 to 80 in H_2O and 0 to 130 in H_2O (0 to 20 kPa and 0 to 32 kPa)
Inaccuracy	±2% of full scale (if sensor is inserted to average velocity point in the duct)
Rangeability	20:1
Cost	About $2500 to $5000; varies with accessories
Partial List of Suppliers	Fluidynamic Devices Ltd. United Scientific/Monitor Labs (formerly Lear Siegler Measurement Controls Corporation)

OPERATING PRINCIPLE

Volumetric flow rate in a pipe or duct can be inferred from a measurement of gas velocity, and one of the methods to measure this velocity is jet deflection detection. The operation of this sensor requires the blowing of air (or some other gas that is compatible with the process) through a nozzle, which forms a jet as shown in Figure 2.8a. The jet is centered between the two receiver ports when there is no flow in the process pipe or duct. In that case, the differential pressure between the two ports is zero. As a process flow is initiated, the jet is deflected, and the amount of this deflection will be related to the velocity of the flowing process stream. Figure 2.8a shows how the pressure profile of the jet shifts as the velocity of the process stream increases.

The deflection of the jet will cause an increase in the pressure at the downstream port and a decrease at the upstream port. The geometry of the ports is so designed that, over the useful

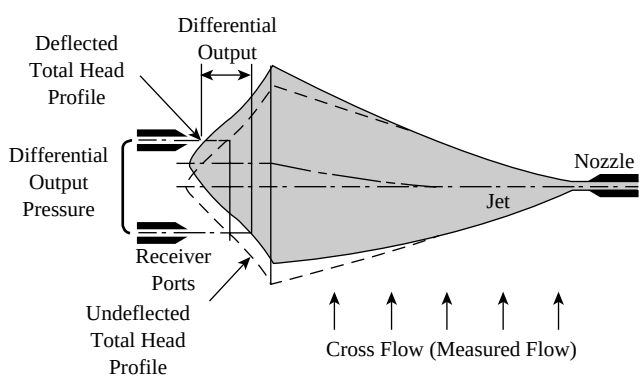

FIG. 2.8a
Pressure profile generated by a jet deflection-type flow detector.

© 2003 by Béla Lipták

range of the element, the change in differential pressure is linearly proportional to the velocity of the process stream. The actual value of this pressure differential is a function of the product of the process velocity and the square root of the gas density. If the density is constant, the pressure drop varies linearly with gas velocity. If the particulate concentration in the process fluid (flue or stack gases) is separately measured, this reading will yield the mass emission rate of particulate materials.

In some respects, this flowmeter is similar to the conventional pitot tube. Similarities include the negligible pressure drop created, the high speed of response, and the retractable design, which can be used for wet tapping or to measure flow profiles by traversing the cross section of the pipe or duct. On the other hand, the jet-deflection sensor has features that are superior to those of conventional pitot sensors.

These advantages include the existence of a continuous back-purge and of the auxiliary cleaning jets, which keep the receiver ports clean. Another advantage is that the element is heated to a temperature above the dew point, so condensation is avoided. In addition, the output signal is not only linear but is also much stronger than that of a conventional pitot element. At a supply pressure of 50 PSIG (345 kPa), the output differential-pressure signal generated about 1.5 in of water column per each ft/sec (0.3 m/sec), which is about 100 times what is generated by a pitot tube.

The relationship between process gas velocity and flow rate is

$$Q = 60VA \qquad \textbf{2.8(1)}$$

where

Q = flow rate, in actual cubic feet per minute (ACFM)
V = velocity, feet per second (ft/sec)
A = pipe or duct cross-sectional area, square feet (ft^2)

In case of laminar flow in a circular duct, the profile is parabolic with the maximum velocity at the center and zero velocity at the walls. In this case, the maximum velocity is twice the average; therefore, the reading taken at the center of the duct will be twice the average for the laminar flow case. In turbulent flow in a circular duct, the average velocity point is located at approximately 25% of the radius as measured from the duct wall. The accurate determination of average velocity in rectangular ducts is more complicated, and no simple rules of thumb can be given. The point velocity, in general, is inaccurate, because the velocity profile is not uniform.

In many actual installations, the point of average velocity will not be located at the predicted insertion depth because of disturbances introduced by the upstream piping configuration. For proper operation, the upstream piping should be straight for at least 20 pipe diameters to allow for the disturbances to smooth out. When this upstream straight run requirement cannot be met, an average velocity point can sometimes be found by traversing the duct and making a number of measurements at a number of points across the cross section.

A traverse should always be made on rectangular ducts, if accurate measurement is required. Traversing rectangular ducts is time consuming because of the need for traversing in two or more planes. In addition, the average velocity points can shift as flow rates vary in both the rectangular or circular ducts.

HOT-TAPPING

Probe-type instruments, such as the jet deflection type element or the pilot tube, can be installed so that they can be removed for inspection without shutting down the process. Figure 2.8b shows the detail of such a *hot-tapping* installation, which makes it possible to remove the probe while the pipe is under pressure. To remove the sensor, first the gland nut is loosened sufficiently to allow the withdrawal of the shaft of the element until it is outside of the gate valve and in the "outside chamber." The valve is then closed, the outside chamber is vented, and the gland nut is removed to allow the safe removal of the element.

Normally, the jet deflection element is installed in piping that is under low pressure or vacuum; thus, the risk of having the element blow out during removal is slight. Nonetheless, it is recommended to install stop rods or safely chains so as to completely eliminate the possibility of injury caused by a blowout.

The step-by-step hot-tapping procedure is shown in Figure 2.8c. The first step is to weld a flanged nozzle to the pipe that is to be tapped. As the second step, a flanged gate valve is attached to the weld neck flange. The third step is to bolt a hot-tapping drill to the downstream side of the gate valve. After the gate valve is opened, the hot-tapping machine drills through the wall of the process pipe. Rigid safety procedures must be enforced during hot-tapping operations, particularly if the process is flammable or hazardous. Hot-tapping can be performed only if the piping specification does

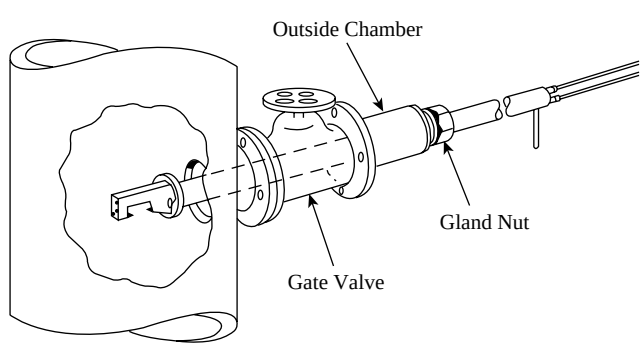

FIG. 2.8b
Hot-tap installation allows for the removal of the flow element, while the pipe or duct is under pressure.

© 2003 by Béla Lipták

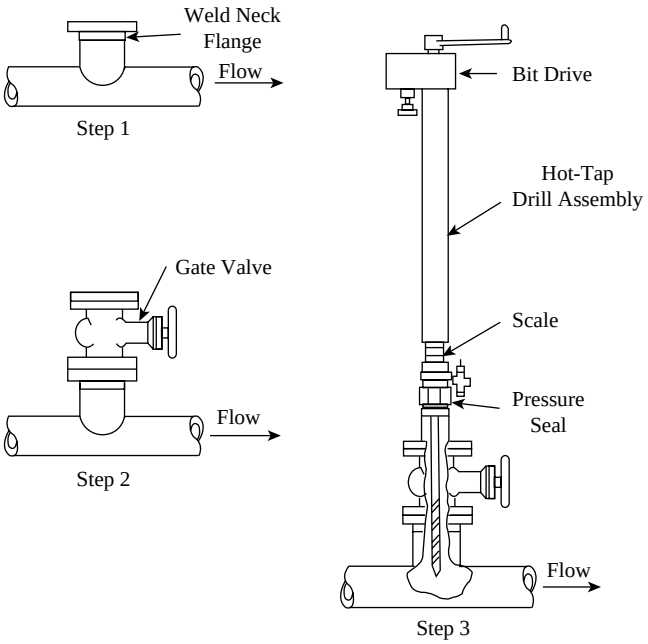

FIG. 2.8c
Hot-tapping procedure.

not require that welds be stress relieved and if there is flow in the pipe so that the heat of welding and drilling is removed.

The pressure seal on a hot-tap machine is similar in its design to that of a control valve packing box and it allows the tapping of pipes under relatively high pressures. A hand-operated drilling assembly is shown in the figure, but units are also available with pneumatic or electric drives. A scale is provided on the machine, showing the depth to which the operator has drilled into the pipe. After the drilling is done, the bit is retracted, the valve is closed, and the hot-tap machine is removed. The tap is now ready to accept the gland nut and outside chamber, which is provided with the flow element as shown in Figure 2.8b.

CONCLUSION

Jet deflection flow detectors can be considered for flow measurement in low-pressure, circular, or rectangular ducts. They can be periodically purged or flushed and can be removed for inspection and cleaning. They are suitable for dirty, abrasive, corrosive, and plugging services. Their accuracy of ±2% of full scale is usually acceptable for making flow measurements around flare headers, stacks, and air ducts. It should be remembered that the actual installed accuracy is dependent on one's ability to insert the element to a depth at which the velocity is the average of the velocity profile across the duct.

Bibliography

Baker, R. C., *Flow Measurement Handbook*, Cambridge University Press, UK, 2000.
Brooks, E. F. et al., Continuous Measurement of Total Gas Flow Rate from Stationary.
Buzzard, W. S., *Flow Control*, ISA, Research Triangle Park, NC, 1994.
Cushing, M., The future of flow measurement, *Flow Control*, January 2000.
Desmeules, M., *Fundamentals of Gas Measurement*, Canadian Meter Company, Milton, Ontario, Canada, June 1999.
Miller, R. W., *Flow Measurement Handbook*, 3rd ed., McGraw-Hill, New York, 1996.
Spitzer, D. W., *Flow Measurement*, 2nd ed., ISA, Research Triangle Park, NC, 2001.
Yoder, J., Flowmeter shootout, part I and II: new technologies, *Control*, February and March 2001.

Other Sources

Federal Register, Vol. 42, No. 20, 5936, 1977.
Federal Register, Vol. 42, No. 160, 41754, 1977.
Ginesi, D., Application and Installation Guidelines for Flowmeters, ISA/93 Conference, Chicago, IL, September 1993.
Spitzer, D. W., *Industrial Flow Measurement*, 2nd ed., ISA, Research Triangle Park, NC, 1990.
TRW Systems, U.S. Dept. of Commerce, Washington, DC, P.B. 241894.

© 2003 by Béla Lipták

2.9 Laminar Flowmeters

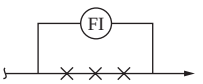

Flow Sheet Symbol

R. SIEV (1969) **B. G. LIPTÁK** (1995) **J. B. ARANT** (1982, 2003)

Design Pressure	Up to 5000 PSIG (34 MPa)
Design Temperature	Up to 300°F (150°C) normally, but can be higher with special designs
Material of Construction	Stainless steel, aluminum, or any alloy available in small bore tubing
Fluids	Liquids and gases
Flow Range	0.0001 to 2000 scfm for gases (3 cm^3/min to 57 m^3/min) 0.0003 to 10 GPM for liquids (1 cm^3/min to 38 l/min)
Inaccuracy	0.5% to 1% of actual flow for commercial gas flow elements, if calibrated
Flow Turndown	10:1 minimum
Flow Characteristic	Linear to approximately linear
Costs	A 1/2-in. (13 mm) stainless-steel laminar flow element costs $700, a 2-in. (50 mm) unit costs $1500, and a 16-in. (300 mm) all-stainless unit costs $11,000. The differential-pressure readout devices are additional to the above element costs.
Partial List of Suppliers	Aalborg Instruments & Controls (www.aalborg.com) Alicat Scientific, ATC (www.alicatscientific.com) Chell Instruments Ltd. (UK), Hastings (www.chell.co.uk) CME, A Division of Aerospace Control Products (www.cmeflow.com) Matheson Tri-Gas (www.matheson-trigas.com) Meriam Instrument Division of Scott Fetzer (www.meriam.com) National Instruments (www.ni.com) Universal Flow Monitors Inc. (www.flowmeter.com)

Laminar flowmeters fill a special need in flow measurement where the requirements might include low to extremely low flow rates, linear calibration and low noise, the ability to measure high-viscosity liquids, or steady low-flow repeatability and control accuracy. Laminar flowmeters are intended for very low flow rates where other types of meters are either marginal in performance or cannot be used at all. Laminar flowmeters can be constructed by various methods, but the most common is with capillary tubes. Hence, the terms *laminar flowmeter* and *capillary flowmeter* are virtually synonymous. Proprietary commercial units use other matrix shapes and are intended for use with gases (Figure 2.9a). Where gas is metered, it is preferable to use calibrated commercial units instead of undertaking the design of a laminar flowmeter.

The flowmeter consists of the laminar flow element and a differential-pressure measuring instrument. While the flow is theoretically linear with pressure drop, in practice, some nonlinearities are often encountered. In most cases, these are of little consequence.

The theory for laminar flowmeters is based on the Hagen–Poiseuille Law for laminar flow and the Reynolds number as a means of defining the type of flow. Both are required to investigate and design a laminar flow element. More detailed explanations and discussions of theory can be found in any standard textbook on fluid mechanics.

THEORY

Fluid flow in pipes and tubes is characterized by a nondimensional number called the Reynolds number (Re). Up to approximately Re 2000, the flow is called laminar, viscous, or streamline. Above 10,000, the flow is called fully developed

© 2003 by Béla Lipták

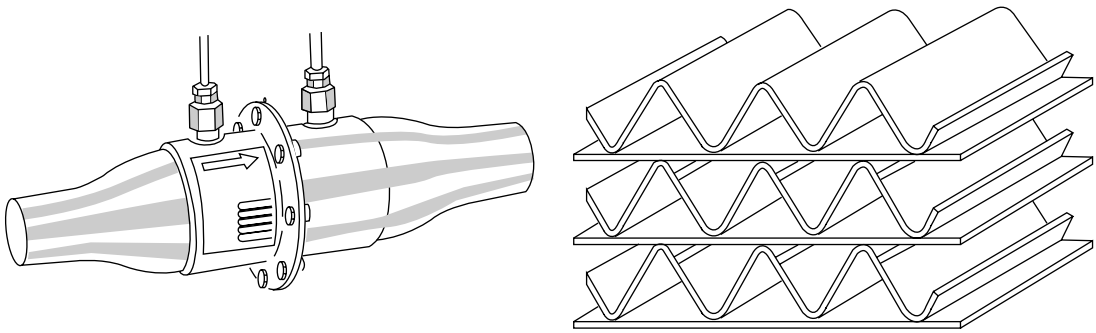

FIG. 2.9a
The laminar flowmeter and its matrix element with miniature triangular duct passage with under 0.1-mm effective diameters. (Courtesy of Meriam Instrument Div. of Scott Fetzer Co.)

turbulent. The region between 2000 and 10,000, where the flow is shifting from laminar to turbulent, is not clearly defined but is called transitional. Generally, laminar flow elements are restricted to numbers under 2000 and, most commonly, well below 1200. Certain methods will enable a capillary element to be used satisfactorily up to Re 15,000 with a modest sacrifice in error and linearity.

Reynolds number is defined by the following equations:

For liquid flow,

$$\mathrm{Re} = \frac{50.7\rho Q}{D\mu} \quad \text{or} \quad \mathrm{Re} = \frac{6.32W}{D\mu} \qquad \textbf{2.9(1)}$$

where
Re = Reynolds number
ρ = density (lb/ft^3) at flowing temperature
Q = flow rate (gal/min)
D = internal tube diameter (in.)
μ = viscosity of flowing temperature (centipoise)
W = flow rate (lb/h)

For gas flow,

$$\mathrm{Re} = \frac{6.32\rho Q}{D\mu} \quad \text{or} \quad \mathrm{Re} = \frac{6.32W}{D\mu} \qquad \textbf{2.9(2)}$$

where
ρ = density at standard conditions (lb/ft^3)
Q = flow rate (scfh)
Other units = as defined for liquid

For the laminar flowmeter shown in Figure 2.9a, the Reynolds number is limited to a range of 150 to 300 and is calculated as

$$\mathrm{Re} = 228(SG)(P)(\Delta P)/m\mu \qquad \textbf{2.9(3)}$$

TABLE 2.9b
Gas Properties under the Standard Conditions of 29.92 in of Mercury and 70°F (760 mm of Mercury and 21°C)

Gas	*Density (lb/ft^3)*	*μ Viscosity, Micropoise*	*Specific Gravity*
Air	0.0749	181.87	1.000
Argon	0.1034	225.95	1.380
Helium	0.0103	193.9	0.138
Hydrogen	0.0052	88.41	0.0695
Nitrogen	0.0725	175.85	0.968
Oxygen	0.0828	203.47	1.105
Carbon dioxide	0.1143	146.87	1.526

where
SG = specific gravity relative to air (Table 2.9b)
P = flowing gas pressure in inches of mercury absolute
ΔP = differential pressure in inches of water
$m\mu$ = viscosity of the flowing gas in micropoise (Table 2.9b)

Hagen–Poiseuille Law

Once the tube inside diameter required to give laminar flow according to the Reynolds number calculation has been defined, the length of the capillary has to be determined to design the laminar flowmeter system. These equations are as follows.

For liquid flow,

$$L = 1.5876\times10^3\,\frac{\Delta PD^4}{\mu Q} \qquad \textbf{2.9(4)}$$

or

$$L = \frac{\Delta PD^4\rho}{7.86\times10^5\,\mu W} \qquad \textbf{2.9(5)}$$

© 2003 by Béla Lipták

where

L = length of tube (in.)
ΔP = differential pressure drop (in water)
D = tube internal diameter (in.)
μ = viscosity at flowing temperature (centipoise)
ρ = density at flowing temperature (lbm/ft^3)
Q = flow rate (gal/min)
W = flow rate (lbm/h)

Equation 2.9(5) can also be used for calculating a gas flow capillary element if the value of ΔP is no greater than 10% of the inlet pressure. Otherwise, changes in gas density, specific volume, and flow velocity cause too many complications in the calculations. While the calculation is in weight units, this can be easily converted to any desired scale units.

Design Parameters

There are a number of guidelines for successful design of a laminar flowmeter.

1. The differential pressure drop can range from 5 to 800 in. of water (1.24 to 200 kPa).
2. $(L/D)/\mathrm{Re}$ should be a minimum of 0.3; for best linearity, a value of 0.6 or greater is preferable. Large L/D ratios and/or lower Reynolds numbers contribute to accuracy. For example, the entrance effect for laminar flow is negligible if $(L/D)/\mathrm{Re} > 0.3$ and $\mathrm{Re} < 500$.
3. The area of the flow conduit preceding the capillary should be a minimum of 20 times the capillary area.
4. The differential-pressure instrument's pressure connections should be located 100 to 200 capillary diameters from the capillary ends.
5. A filter capable of removing particles 0.1 in. (2.54 mm) or larger than the capillary internal radius should be installed upstream of the system.
6. The metering system should be sloped up for liquids to permit gas venting and sloped down for gases to permit liquid draining.
7. Examination of the Hagen-Poiseuille equation shows that viscosity is a primary variable; changes in viscosity can result in large flow measurement errors. With a known fluid or composition, the only thing that affects viscosity is temperature. For this reason, the temperature must be known and held essentially constant. This can be done by immersing the metering system and measuring capillary in a constant temperature bath as shown in Figure 2.9c. If the flow is measured in weight units such as pounds per hour, then fluid density must be known. Fluid density also varies with temperature, but controlling the temperature to fix viscosity will also fix density. With some fluids, cooling may be required instead of heating, but the overall principle is the same.

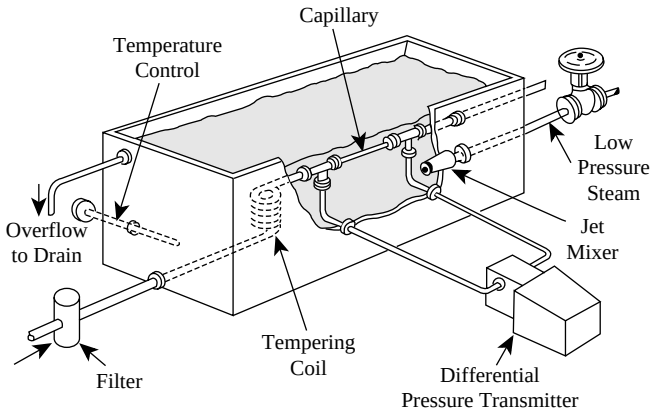

FIG. 2.9c
Typical capillary with constant temperature bath.

Design Calculations for Liquid Service

Based on the flow rate and the viscosity of the fluid, select a tube internal diameter that will result in a Reynolds number within the laminar range and preferably less than 1200. Calculate the length of tubing required using the selected tube diameter to ensure that it is a reasonable length and that it meets the $(L/D)/\mathrm{Re}$ criteria. By working back and forth between the various equations, the system can be tailored to meet almost any design criteria. For example, let us assume that it is desired to design a capillary flowmeter to measure a small liquid catalyst stream, and the basic data for the catalyst flow is as follows:

Maximum flow capacity: 50 lbm/h
Viscosity: 20 cP at 100°F
Density: 53.8 lbm/ft^3
Desired instrument ΔP: 100 in of water

Small-diameter, standard stainless-steel tubing is readily available and should be used. To design as linear and accurate a flowmeter as possible, a tube bore that provides a large $(L/D)/\mathrm{Re}$ is desirable. To minimize plugging problems and to enable the use of a filter that won't clog easily, start by looking at a 3/16 × 0.032-in. wall thickness tubing with a nominal internal diameter of 0.1235 in. From Equation 2.9(1),

$$\mathrm{Re} = \frac{6.32W}{D\mu} = \frac{6.32 \times 50}{0.1235 \times 20} = 128 \qquad \textbf{2.9(6)}$$

This is well into the laminar range, so the length of the flow element can be calculated to determine if it will make a reasonable design. From Equation 2.9(5),

$$L = \frac{\Delta P D^4 \rho}{7.86 \times 10^{-5} \mu W} = \frac{100 \times 0.1235^4 \times 53.8}{7.86 \times 10^{-5} \times 20 \times 50} = 15.7\,\text{in.} \qquad \textbf{2.9(7)}$$

$$(L/D)\,\mathrm{Re} = (15.7/0.1235)/128 = 0.993 \qquad \textbf{2.9(8)}$$

© 2003 by Béla Lipták

This is an easy length to work with in fabricating a meter element and a constant temperature bath, and it looks like a reasonable design based on the criteria.

ERROR SOURCES

Changes in viscosity and density can result in flow measurement errors. Viscosity changes in liquid as a result of temperature can be substantial, while density changes are more moderate. With gases, the reverse is usually true, with temperature having more influence on density and less on viscosity. The need for careful control of the operating temperature to minimize these effects must be emphasized.

From Equations 2.9(4) and 2.9(5), it can be seen that internal diameter of the tube is very important, because it is multiplied to the fourth power. While high-quality tubing will be very close to published specifications, manufacturing tolerances will result in variations from these dimensions, both laterally and longitudinally. If the actual effective internal diameter of the capillary tube differs by 1% from the value used in the calculation for a given ΔP, an error of about 4% will result. Therefore, the laminar flowmeter should be calibrated on a known fluid before use, and appropriate design adjustments should be made as necessary.

To measure the true capillary differential pressure drop according to the Poiseuille equation, it would be necessary to put the pressure taps into the capillary at the calculated L dimension. This is impractical because of the small tubing. A pressure tap must be perfectly flush with the inside of the tube and must be clean with no burrs or other projections into the tube. Otherwise, considerable differential-pressure measurement error will result. Using practical methods of constructing a capillary flowmeter, there are three additional sources of pressure drop in addition to the capillary loss. These are all additive and will give a greater indicated pressure drop than the capillary flow alone. These three sources of error are inlet loss, exit loss, and capillary entrance loss. These losses also contribute to nonlinearity.

There is very little loss from the entrance fitting into the capillary tube if laminar flow conditions exist. But if the piping cavity ahead of the capillary is extremely large relative to the capillary (approximating a reservoir) and the fluid velocity is thus extremely low (approaching zero), there can be an inlet effect and pressure loss.[1] This is a result of the sudden contraction from the large reservoir to the small tube bore, forming a bell-mouth shape approach flow. This loss can be expressed as

$$\Delta P_i = \frac{2.8\times10^{-7} W^2}{D^4 \rho} \qquad \textbf{2.9(9)}$$

This equation is derived from Bernoulli's equation for flow out of a reservoir.

When the fluid exits the capillary, the flow path enlarges. If the piping is similar to that described under inlet loss, the loss can be calculated by

$$\Delta P_e = \frac{5.6\times10^{-7} W^2}{D^4 \rho} \qquad \textbf{2.9(10)}$$

Entrance loss occurs in addition to the normal capillary pressure drop in the initial fluid path distance or, to state it in another way, for a short distance the pressure drop is higher than that predicted by the Poiseuille Equation.[2,3] The additional loss is due to the work expended in the formation of the parabolic velocity distribution profile characteristic of laminar flow. It can be expressed in terms of an equivalent length of capillary, L_{eq}, added to that calculated by the Poiseuille equation. Refer to Figure 2.9d for determining the L_{eq}.

The following equation can be used for the pressure drop:

$$\Delta P_{en} = \frac{1.96\times10^{-7} W^2}{D^4 \rho} \qquad \textbf{2.9(11)}$$

Table 2.9e can be used as a quick guide for judging the design factors that will minimize overall entrance effects. For the conditions given in the table, the error involved will be less than 1%. In general, the effect of all of the above errors will be minimized if the Reynolds number is low, the laminar flow element is long, and the pressure drop is high. The overall

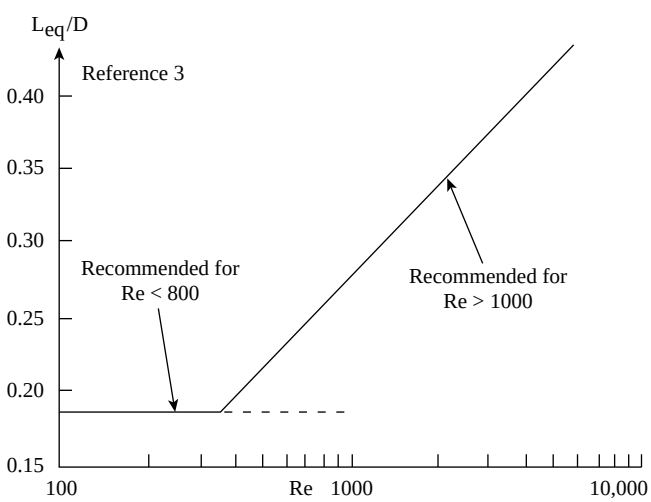

FIG. 2.9d
Equivalent length of capillary (L_{eq}).

TABLE 2.9e
L/D Ratio to Minimize Entrance Effect

Re	10	50	100	500	1000	2000
L/D>	15	75	150	750	1500	3000

© 2003 by Béla Lipták

error can be calculated by this equation as

$$\text{Percent error} = \frac{\Delta P_i + \Delta P_e + \Delta P_{en} \times 100}{\Delta P} = \frac{0.367W \times 100}{\mu L} \qquad \textbf{2.9(12)}$$

RANGE EXTENSION TECHNIQUES

Two techniques are used to expand the range capability of laminar flow elements. One is to use a number of capillary tubes in parallel. The other is to use a tight helical coil capillary. The choice of technique depends on such factors as desired flow rate, nonlinearity requirements, Reynolds number, capillary length, and system space design limitations.

If the amount of flow desired is greater than can be conveniently handled by a single capillary, the flow can be split into many smaller units as necessary.[4] Units with matrix elements (Figure 2.9a) or with more than 900 individual capillary tubes have been built and used successfully. The mechanical construction of multiparallel capillaries can be a problem. Tube packing voids may not affect meter operation but add considerable difficulty to calculating the meter range. Normally, it is best to eliminate the voids by filling the spaces with solder, braze material, or plastic resin; the filler material chosen will depend on fluid compatibility and operating conditions. Overall, it is a tricky mechanical design.

Coiling a length of straight capillary results in a flow phenomenon called the *Dean effect*. When a fluid flows through a curved pipe or coil, a secondary circulation of fluid, known as a double eddy, takes place at right angles to the main direction of flow. This circulation accounts for the fact that the pressure drop in curved pipe is greater than in a corresponding length of straight pipe. The Dean effect stabilizes laminar flow and raises the Reynolds number at which turbulent flow starts. It has been established that this will allow properly designed coiled capillaries to be operated up to a Reynolds number of 15,000.[5] The Reynolds number at which laminar flow can be sustained for various coil curvature ratios is called the *critical Reynolds number*. It is a function of the internal diameter of the tube and the coil tightness or diameter. Table 2.9f gives the approximate critical Reynolds number at which laminar flow can be sustained for various coil curvature ratios.

In this table, D is the tube inside diameter, and Dc is the mean coil diameter, centerline to centerline. From a practical viewpoint, the ratio of $D/Dc = 1/9$ is equivalent to the maximum allowable critical Reynolds number of 15,000 and can be used as a safe design in most cases.

The pressure drop of laminar flow through coils can be expressed in terms of an equivalent length, L_e, of straight pipe of the same diameter and shape which will have the same friction loss as the curved pipe. The ratio of the equivalent to actual coil length, L_e/L is a function of the Dean number, or $\text{Re}(D_C/D)^{1/2}$, as shown in Figure 2.9g. This curve is accurate to about ±5%.

TABLE 2.9f
Critical Reynolds Number vs. Coil Curvature Ratio

Coil Curvature Ratio (Dc/D)	*Critical Reynolds Number $(Re)_c$*
Straight Pipe	2100
2000	2700
1000	2900
500	3200
100	4600
50	5700
10	10,000
9	15,000

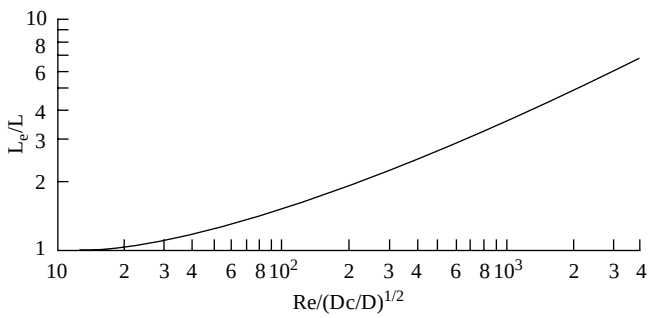

FIG. 2.9g
Equivalent lengths for curved pipe.

The equation for calculating the length of a coiled capillary required to meet a specific metering design is expressed by

$$L = \frac{\Delta P D^4 \rho}{7.86 \times 10^{-5} \mu W C} \qquad \textbf{2.9(13)}$$

where C = the coil factor correction.

The coil factor correction is a function of the term $\text{Re}(D/D_C)^{1/2}$. Refer to Figure 2.9h for C vs. $\text{Re}(D/D_C)^{1/2}$ or to Figure 2.9i for C versus Re for various D/Dc ratios. In very small capillaries, the coil diameter can be the nominal value, since exact centerline measurement is insignificant.

In laminar flow, the friction factor is a function of Reynolds number only and is independent of surface roughness.

The friction factor can be expressed as

$$f = 16/\text{Re} \qquad \textbf{2.9(14)}$$

Therefore, the Fanning equation 2.8(15) can be used as an alternate means of calculating the capillary element as shown by

$$L = \frac{2\Delta P g_c D}{4 f \rho V^2} \qquad \textbf{2.9(15)}$$

© 2003 by Béla Lipták

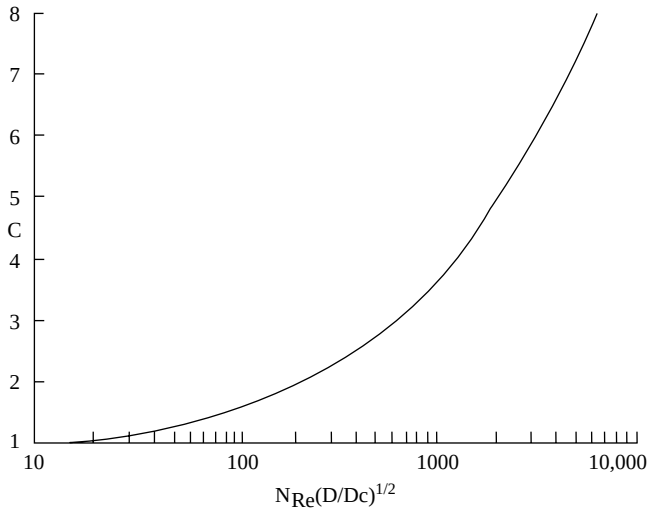

FIG. 2.9h
Correction factors for coiled capillary flowmeter (data adapted from reference 5).

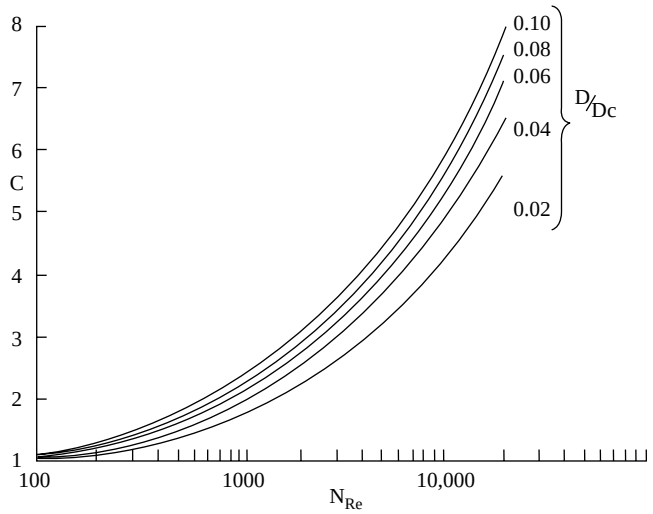

FIG. 2.9i
Correction factors for coiled capillary flowmeters (data adapted from reference 5).

where

L = capillary length (ft)
ΔP = pressure drop (lbf/ft^2)
g_c = gravity constant 32.17 (ft/sec^2)
D = capillary internal diameter (ft)
ρ = fluid density (lbm/ft)
V = fluid velocity (ft/sec)

COMMERCIALLY AVAILABLE UNITS

In the past decade, the use of laminar flowmeters has greatly expanded, and the number of suppliers has also increased. Their applications range from the testing of internal combustion equipment to semi-conductor manufacturing, leak testing, and fan or blower calibration. Standard units are available in several materials, including stainless steel. They can be provided with a variety of connections and in sizes ranging from 0.25 to 16 in. (6 to 400 mm).

In terms of airflow capability, these units range from 5 cc/min to approximately 65 cubic meters/min (2285 SCFM). Pressure differentials generated by the laminar flow elements are usually under 20 in. of water (510 mm of water). The recommended installation practice is to provide 10 to 15 diameters of straight pipe upstream of the flow element. Installation of a filter is also recommended at the meter inlet. In engine testing, a backfire trap is also desirable to prevent carbon deposits on the matrix element.

The measurement error is usually between 0.5 and 1% of actual flow within a 10:1 range. However, this performance is a function of both the quality of calibration of the system and of the precision of the d/p detector.

CONCLUSION

Laminar flowmeters are highly useful in measuring low flow rates of liquids and gases. Design of the elements is based on the use of the Reynolds number and Poiseuille's law. Design for most units is relatively simple, but fabrication of a complete unit and system can be complex. Simple capillary units can be fabricated by the user, but most require manufacturers' skills and design knowledge.

It is highly recommended that the final system be calibrated with the same type of fluid as the fluid upon which the sensor will operate, such as air or nitrogen for gas services and water for liquid services. After such calibration, the conversion is easily made to the actual fluid. The critical consideration is to calibrate the unit under conditions that will approximate the actual in-service Reynolds number of the application. Some sources of calibration services, other than the manufacturers, are the National Institute of Standards and Technology (NIST), Edison ESI, and the Colorado Engineering Experiment Station, Inc. (CEESI).

References

1. Kreith, F. and Eisenstadt, R., *Trans. ASME,* 1070–1078, 1967.
2. Willoughby, D. A. and Kittle, P. A., *Industrial and Eng. Fundamentals,* 6(2), 304–306, 1967.
3. Rivas, M. A. Jr. and Shapiro, A. H., *Trans. ASME,* 489–497, April 1956.
4. Greef, C. E., and Hafckman, J. R., *ISA J.,* 75–78, August 1965.
5. Powell, H. N. and Browne, W. G., *Rev. Sci. Instr.,* 28(2), 138–141, 1957.

Bibliography

Bowen, LeBaron R., Designing laminar-flow systems, *Chemical Eng.,* June 12, 1961.
Cushing, M., The future of flow measurement, *Flow Control,* January 2000.

© 2003 by Béla Lipták

Fain, D. E., Calibration of a laminar flowmeter, in *Flow, Its Measurement and Control in Science and Industry,* Volume 2, Instrument Society of America, Research Triangle Park, NC, 1981.

Gann, R. G., *J. Chemical Ed.*, 51(11), 761–762, 1974.

Hughes, R. A., New laminar flowmeter, *Instrum. Control Syst.*, April 1962.

Instrum. Control Syst., 75–76, 1976.

Lipták, B. G., Flow measurement trends, *Control,* June 2000.

Mahood, R. F. and Littlefield, R., private communications, March 1952.

Polentz, L. M., Capillary flowmetering, *Instrum. Control Syst.*, April 1961.

Roth, R. E., Four weeks to fill a bucket, *Instrumentation*, 7(6).

Spitzer, D. W., *Flow Measurement*, 2nd ed., *ISA Press*, Research Triangle Park, NC, 2001.

Thomas, D. L., Laminar flow elements, *Control,* March 1991.

Todd, David, A., A universal calibration curve for laminar flowmeters, in *Flow, Its Measurement and Control in Science and Industry,* Volume 2, Instrument Society of America, Research Triangle Park, NC, 1981.

Weigand, J. and Lombardo, L., The use of laminar flow element in computerized flow measurement, 1989 ISA Conference, Paper #89–0002.

Welch, J. V., Trends in low gas flow metering, *InTech*, February 1991.

© 2003 by Béla Lipták

2.10 Magnetic Flowmeters

J. G. KOPP (1969, 1982) **B. G. LIPTÁK** (1995) **H. EREN** (2003)

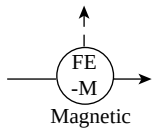

Magnetic
Flow Sheet Symbol

Design Pressure	Varies with pipe size; for a 4-in. (100-mm) unit, the maximum is 285 PSIG (20 bars); special units are available with pressure ratings up to 2500 PSIG (172 bars)
Design Temperature	Up to 250°F (120°C) with Teflon® liners and up to 360°F (180°C) with ceramic liners
Materials of Construction	Liners: ceramics, fiberglass, neoprene, polyurethane, rubber, Teflon, vitreous enamel Kynar Electrodes: platinum, Alloy 20®, Hasselloy C, stainless steel, tantalum, titanium, tungsten carbide, Monel®, nickel, platinum-alumina ceramic
Type of Flow Detected	Volumetric flow of conductive liquids, including slurries and corrosive or abrasive materials
Minimum Conductivity Required	The majority of designs require 1 to 5 µS/cm. Some probe types require more. Special designs can operate at 0.05 or 0.1 µS/cm.
Flow Ranges	From 0.01 to 100,000 GPM (0.04 to 378.000 l/min)
Size Ranges	From 0.1 to 96 in. (2.5 mm to 2.4 m) in diameter
Velocity Ranges	0–0.3 to 0–30 ft/sec (0–0.1 to 0–10 m/sec)
Power Consumption	20 W with DC excitation, 30 W for a 2-in. (50-mm) AC and 0.3 kW for a 30-in. (760-mm) AC unit.
Input Signals	Voltage signal from detector proportional to flow rate; digital input 20 to 30 VDC for range switching, totalizer control, zero adjustment
Output Signal	4 to 20 mA DC, digital outputs for pulse outputs, multirange selection, high and low limits, empty pipe alarm, preset count, and converter failure outputs
Communication Output	Digital signal is superimposed on 4- to 20-mA; current signal conforms with HART protocol
LCD Display	Two-line, line, or dot matrix
Surge Protection	Arresters are installed in the power supply and current signal output circuits
Error (Inaccuracy)	±1% of actual flow with pulsed DC units within a range of up to 10:1 if flow velocity exceeds 0.5 ft/sec (0.15 m/sec); ±1% to ±2% full scale with AC excitation
Cost	The least expensive designs are the probe versions that cost about $1500. A 1-in. (25-mm) ceramic tube unit can be obtained for under $2000. A 1-in. (25-mm) metallic wafer unit can be obtained for under $3000. An 8-in. (200-mm) flanged meter that has a Teflon liner and stainless electrodes and is provided with 4- to 20-mA DC output, grounding ring, and calibrator will cost about $8000. The scanning magmeter probe used in open-channel flow scanning costs about $10,000.
Partial List of Suppliers	ABB (www.abb.com) AccuDyne Systems Inc.

© 2003 by Béla Lipták

Advanced Flow Technology Co
Arkon Flow Systems (www.arkon.co.uk)
Badger Meter Inc. (www.badgermeter.com)
Baily Controls Co.
Bopp & Reuther Heinrichs Messtechnik (www.burhm.de)
Brink HMT
Brooks Instrument Div. of Emerson (www.emersonprocess.com)
Burkert GmbH & Co. KG
Cole-Parmer Instrument Co. (www.coleparmer.com) (probe)
Colorado Engineering Experimental Station
Control Warehouse
Danfoss A/S (www.danfoss.com)
Dantec Electronics
Datam Flutec
Davis Instruments
Diesel GmbH & Co.
H.R. Dulin Co.
Dynasonics Inc. (probe-type)
Electromagnetic Controls Corp.
Elis Plzen
Endress+Hauser Inc. (www.usendress.com)
Engineering Measurements Co.
EMCO (www.emcoflow.com)
Euromag (www.euromag.net)
Fischer & Porter Co.
The Foxboro Co. (www.foxboro.com)
Honeywell Industrial Control (www.honeywell.com/acs/cp)
Hangzhu Senhau Meter Factory
Instrumark International Inc.
Isco Inc. (www.isco.com)
Istec Co.
Johnson Yokogawa Corp.
K & L Research Co. (probe-type)
Krone-America Inc. (www.kanex-krohne.com)
Liquid Controls Inc. (www.lcmeter.com)
Marsh-McBirney Inc. (www.marsh-mcbirney.com)
McCrometer (www.mccrometer.com)
Meter Equipment Mfg.
Metron Technology (insertion-type)
Monitek Technologies Inc. (www.monitek.com)
Montedoro Whitney
MSR Magmeter Manufacturing Ltd. (probe-type)
Nusonics Inc.
Omega Engineering Inc. (www.omega.com)
Oval Corp.
Proces-Data A/S
Rosemount Inc. (www.rosemount.com)
Sarasota Measurements & Controls
Schlumberger Industries (www.s/b.com)
Siemens AG (www.sea.siemens.com)
Signet Industrial (probe-type)
Sparling Instruments Inc. (www.sparlinginstruments.com)
Toshiba International
TSI Flow Meters Ltd. (www.tsi.ie)
Venture Measurement LLC
Wilkerson Instrument Co.
XO Technologies Inc.
Universal Flow Monitors Inc. (www.flowmeters.com)
Yamatake Co.
YCV Co.
Yokogawa Electric Corp. (www.yokogawa.co.uk)

© 2003 by Béla Lipták

Unlike many other types of flowmeters, magnetic flowmeters offer true noninvasive measurements. They can be constructed easily to the extent that existing pipes in a process can be configured to act as a meter by simply adding two external electrodes and a pair of suitable magnets. They measure both forward and reverse flows. They are insensitive to viscosity, density, and other flow disturbances. Electromagnetic flowmeters are linear devices that are applicable to a wide range of measurements, and they can respond rapidly to changes in the flow. In the recent years, technological refinements have resulted in more economical, accurate, and smaller instruments.

As in the case of many electrical devices, the underlying principle of the magnetic-type flowmeters is Faraday's law of electromagnetic induction. Faraday's law states that, when a conductor moves through a magnetic field of a given strength, a voltage is produced in the conductor that is dependent on the relative velocities between the conductor and the field. This concept is used in electric generators. Faraday foresaw the practical application of this principle to the flow measurements, since many liquids are electrical conductors to some extent. Faraday went farther and attempted to measure the flow velocity of the Thames River. The attempt failed because his instrumentation was not sensitive enough. However, about 150 years later, we successfully can build magnetic flowmeters based on Faraday's law.

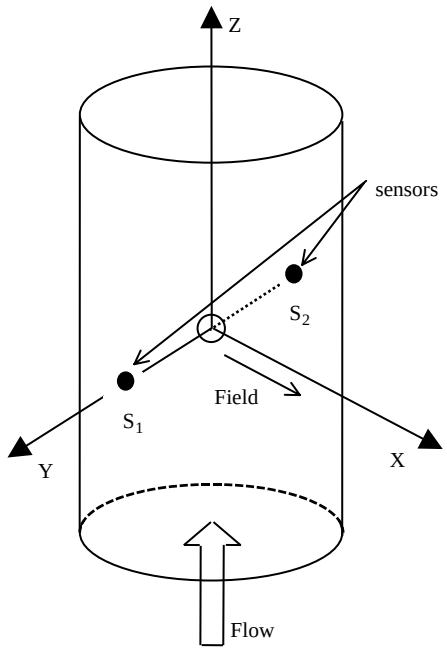

FIG. 2.10a
Operational principle of electromagnetic flowmeters: Faraday's Law states that a voltage is induced in a conductor moving in a magnetic field. In electromagnetic flowmeters, the direction of movement of conductor, the magnetic field and the induced emf are perpendicular to each other in X, Y and Z axes. Sensors S_1 and S_2 experience a virtual conductor due to liquid in the pipe.

THEORY

Faraday's law states that, if a conductor of length l (m) is moving with a velocity v (m/sec) perpendicular to a magnetic field of flux density B (Tesla), a voltage e will be induced across the ends of the conductor. The value of the voltage may be expressed by

$$e = Blv \qquad \textbf{2.10(1)}$$

Figure 2.10a shows how Faraday's law is applied in the electromagnetic flowmeter. The magnetic field, the direction of the movement of the conductor, and the induced emf are all perpendicular to each other. The liquid is the conductor that has a length, D, equivalent to the inside diameter of the flowmeter. The liquid conductor moves with an average velocity V through the magnetic field of strength B. From Equation 2.11(1), the induced voltage e is

$$e = BDV/C \qquad \textbf{2.10(2)}$$

where C is a constant to take care of the proper units.

Figure 2.10b illustrates the principles of operation of electromagnetic flowmeters in detail. When the pair of magnetic coils are energized, a magnetic field is generated in a plane that is mutually perpendicular to the axis of the liquid conductor and the plane of the electrodes. The velocity of the liquid is along the longitudinal axis of the flowmeter body; therefore, the voltage induced within the liquid is mutually perpendicular to both the velocity of the liquid and the magnetic field. The liquid can be considered as an infinite number of conductors moving through the magnetic field, with each element contributing to the voltage generated. An increase in flow rate of the liquid conductors moving through the field will result in an increase in the instantaneous value of the voltage generated. Also, each of the individual "generators" is contributing to the instantaneously generated voltage. Whether the profile is essentially square (characteristic of a turbulent velocity profile), parabolic (characteristic of a laminar velocity profile), or distorted (characteristic of poor upstream piping), the magnetic flowmeter averages the voltage contribution across the metering cross section. The sum of the instantaneous voltages generated is therefore representative of the average liquid velocity, because each increment of liquid velocity within the plane of the electrode develops a voltage proportional to its local velocity. The signal voltage generated is equal to the average velocity almost regardless of the flow profile.

Once the magnetic field is regarded to be constant, and the diameter of the pipe is fixed, the magnitude of the induced voltage will be proportional only to the velocity of the liquid [Equation 2.10(2)]. If the ends of the conductor, in this case the sensors, are connected to an external circuit, the induced voltage causes a current, i, to flow that can be processed suitably as a measure of the flow rate. The resistance of the

© 2003 by Béla Lipták

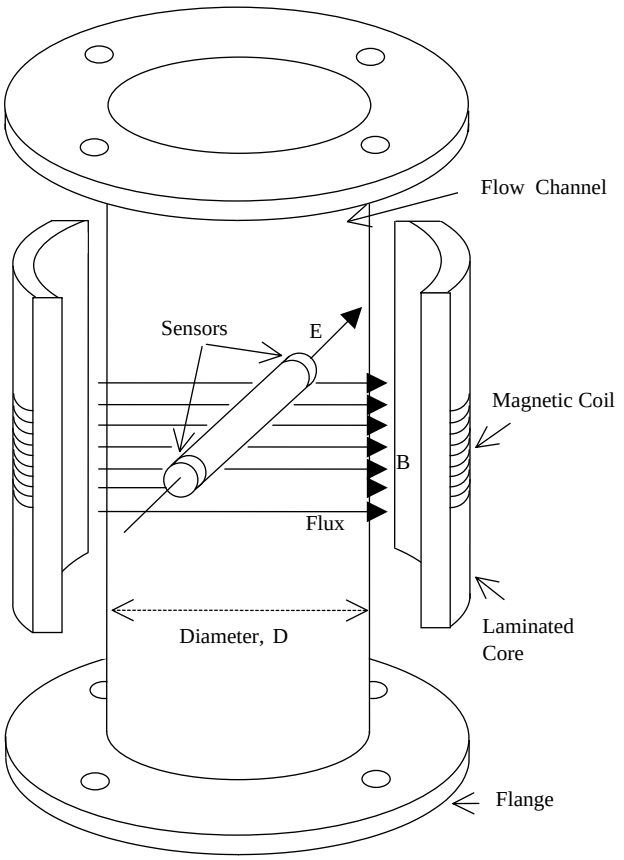

FIG. 2.10b

Construction of practical flowmeters: External electromagnets create a homogeneous magnetic field that passes through the pipe and the liquid inside. Sensors are located 90 deg to the magnetic field and the direction of the flow. Sensors are insulated from the pipe walls. Flanges are provided for fixing the flowmeter to external pipes. Usually, manufacturers supply information about the minimum lengths of the straight portions of external pipes.

moving conductor may be represented by R to give the terminal voltage v_T of the moving conductor as $v_T = e - iR$.

Often, magnetic flowmeters are configured to detect the volumetric flow rate by sensing the linear velocity of the liquid. The relationship between the volume of liquid Q (l/sec) and the velocity may be expressed as

$$Q = Av \qquad \textbf{2.10(3)}$$

Writing the area, A (m^2), of the pipe as

$$A = \pi D^2/4 \qquad \textbf{2.10(4)}$$

gives the induced voltage as a function of the flow rate; that is,

$$e = 4BQ/\pi D \qquad \textbf{2.10(5)}$$

This equation indicates that, in a carefully designed flowmeter, if all other parameters are kept constant, the induced voltage is linearly proportional only to the mean value of the liquid flow. Nevertheless, a main difficulty in electromagnetic flowmeters is that the amplitude of the induced voltage may be very small relative to extraneous voltages and noise. The noise sources include the following:

- Stray voltage in the process liquid
- Capacitive coupling between signal and power circuits
- Capacitive coupling in connection leads
- Electromechanical emf induced in the electrodes and the process fluid
- Inductive coupling of the magnets within the flowmeter

Advantages

1. The magnetic flowmeter is totally obstructionless and has no moving parts. Pressure loss of the flowmeter is no greater than that of the same length of pipe. Pumping costs are thereby minimized.
2. Electric power requirements can be low, particularly with the pulsed DC-types. Electric power requirements as low as 15 or 20 W are not uncommon.
3. The meters are suitable for most acids, bases, waters, and aqueous solutions, because the lining materials selected are not only good electrical insulators but also are corrosion resistant. Only a small amount of electrode metal is required, and stainless steel, Alloy 20®, the Hastelloys®, nickel, Monel®, titanium, tantalum, tungsten carbide, and even platinum are all available.
4. The meters are widely used for slurry services not only because they are obstructionless but also because some of the liners, such as polyurethane, neoprene, and rubber, have good abrasion or erosion resistance.
5. Magmeters are capable of handling extremely low flows. Their minimum size is less than 0.125 in. (3.175 mm) inside diameter. The meters are also suitable for very high-volume flow rates with sizes as large as 10 ft (3.04 m) offered.
6. The meters can be used as bidirectional meters.

Limitations

The meters have the following specific application limitations:

1. The meters work only with conductive fluids. Pure substances, hydrocarbons, and gases cannot be measured. Most acids, bases, water, and aqueous solutions can be measured.
2. The conventional meters are relatively heavy, especially in larger sizes. Ceramic and probe-type units are lighter.
3. Electrical installation care is essential.
4. The price of magnetic flowmeters ranges from moderate to expensive. Their corrosion resistance, abrasion resistance, and accurate performance over wide turndown ratios can justify the cost. Ceramic and probe-type units are less expensive.

© 2003 by Béla Lipták

5. To periodically check the zero on AC-type magnetic flowmeters, block valves are required on either side to bring the flow to zero and keep the meter full. Cycled DC-units do not have this requirement.
6. An important limitation in electromagnetic flowmeters may be the effect of magnetohydrodynamics, which is especially prominent in fluids with magnetic properties. Hydrodynamics refers to the ability of magnetic field to modify the flow pattern. In some applications, the velocity perturbation due to magnetohydrodynamic effect may be serious enough to influence the accuracy of operations (e.g., in the case of liquid sodium and its solutions).

TYPES OF MAGNETIC FLOWMETERS

There are many different types of electromagnetic flowmeters, all based on Faraday's law of induction, such as the AC, DC, dual-excited, and permanent magnet types. This section concentrates on most commonly used flowmeters: the AC, the DC and the dual-excited types. Classification due to usage is briefly explained in the subsection titled "Other Types."

Modern magnetic flowmeters are also classified as

- Conventional flowmeters
- Smart magnetic flowmeters
- Multivariable magnetic flowmeters

Conventional flowmeters have normally have a 4- to 20-mA output. But these magnetic flowmeters are gradually being phased out because of their limited communication capabilities.

Smart magnetic flowmeters are microprocessor-based devices, and they are capable of communicating digitally with other equipment, such as computers. The communication protocols include HART, FOUNDATION™ fieldbus (FF), Profibus (PB), and serial and parallel communications. Integration of microprocessors give them additional features such as self-diagnostic and self-calibration capabilities. Table 2.10c illustrates communication features of some selected magnetic flowmeters.

Multivariable magnetic flowmeters are capable of measuring more than one process variable. For example, by measuring pressure and temperature, it is possible to calculate

TABLE 2.10c
Communication Capabilities of Modern Magnetic Flowmeters

	Type			*Excitation*		*Communication*			
Company	*Smart*	*Conv*	*Multivar*	*AC*	*DC*	*HART*	*FF*	*Profibus*	*Serial*
ABB	✓			✓	✓	✓	✓	✓	✓
Advanced Flow	✓		✓	✓	✓				✓
Bopp & Reuther	✓	✓			✓			✓	
Brooks Inst.	✓	✓			✓	✓			
Brunata	✓	✓			✓				✓
Danfoss	✓	✓			✓	✓		✓	
Diessel	✓	✓			✓				✓
Elis Pilzen	✓	✓			✓				✓
Endress+Hauser	✓				✓	✓	✓	✓	✓
Foxboro	✓	✓		✓	✓	✓			
Isoil	✓				✓				✓
Krohne	✓			✓	✓	✓	✓	✓	✓
Liquid Controls	✓	✓		✓	✓				✓
McCrometer	✓	✓		✓	✓	✓			✓
Oval	✓	✓			✓	✓			✓
Rosemount		✓			✓	✓	✓		
Siemens		✓		✓	✓	✓			
Sparling Inst.	✓	✓			✓	✓			
Toshiba Intl.	✓	✓			✓	✓			
Venture	✓	✓		✓	✓				✓
Yamatake	✓		✓		✓	✓	✓		
Yokogawa	✓				✓	✓	✓		

© 2003 by Béla Lipták

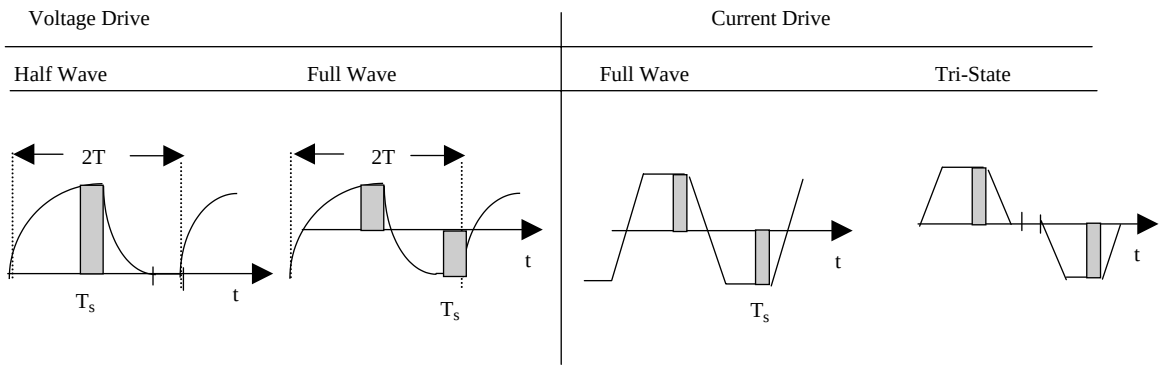

FIG. 2.10d
Types of pulsed DC coil excitation.

density of the flowing materials. From the density, mass flow can be determined.

AC Magnetic Flowmeters

In many commercial magnetic flowmeters, an alternating current of 50 or 60 Hz creates the magnetic field in coils to induce voltage in the flowing liquid. The signals generated are dependent on the velocity of liquid and flowmeter dimensions. Generally, they resemble low-level AC signals, being in the high microvolt to low millivolt ranges. A typical value of the induced emf in an AC flowmeter fixed on a 50 mm internal diameter pipe carrying 500 l/min is observed to be about 2.5 mV.

The AC excitations may be in different forms, but generally they can be categorized into two families: those using on–off excitation and those using plus–minus excitation. In either case, the principle is to take a measurement of the induced voltage when the coils are not energized and to take a second measurement when the coils are energized and the magnetic field has stabilized. Figure 2.10d shows some of the types of excitation offered by various manufacturers.

AC flowmeters operating 50, 60, or 400 Hz are readily available. In general, AC flowmeters can operate from 10 Hz to 5000 Hz. High frequencies are preferred in determining the instantaneous behavior of transients and pulsating flows. Nevertheless, in applications where extremely good conducting fluids and liquid metals are used, the frequency must be kept low to avoid skin effect. On the other hand, if the fluid is a poor conductor, the frequency must not be so high that dielectric relaxation is not instantaneous.

AC magnetic flowmeters reduce the polarization effects at the electrodes, and they are less affected by the flow profiles of the liquid in the pipe. They allow the use of high-Z_{in} amplifiers with low drift and highpass filters to eliminate slow and spurious voltage drifts emanating mainly from thermocouple and galvanic actions. These flowmeters find many diverse applications, including measurement of blood flow in living specimens. Miniaturized sensors allow measurements on pipes and vessels as small as 2 mm dia. In these applications, the excitation frequencies are higher than industrial types—200 to 1000 Hz.

A major disadvantage of an AC flowmeter is that the powerful AC field induces spurious AC signals in the measurement circuits. This requires periodic adjustment of zero output at zero-velocity conditions, which is more frequent than in DC counterparts. Also, in some harsh industrial applications, currents in the magnetic field may vary due to voltage fluctuations and frequency variations in the power lines. The effect of fluctuations in the magnetic field may be minimized by the use of a reference voltage proportional to the strength of the magnetic field to compensate for these variations. To avoid the effects of noise and fluctuations, special cabling and calibration practices recommended by the manufacturers must be used to ensure accurate operations. Usually, the use of two conduits is required—one for signals and one for power. The cable lengths also should be set to specific levels to minimize noise and sensitivity problems.

DC Magnetic Flowmeters

Unlike AC magnetic flowmeters, direct current or pulsed magnetic flowmeters excite the flowing liquid with a magnetic field operating at 3 to 8 Hz. In all of the pulsed DC approaches, the concept is to take a measurement when the coils are excited and store (hold) that information, then take a second measurement of the induced voltage when the coils are not excited (Figure 2.10d). As the current to the magnet is turned on, a DC voltage is induced at the electrodes. When the current in the magnetic coils is turned off, the signal represents only the noise. The signals observed at the electrodes represent the sum of the induced voltage and the noise, as illustrated in Figure 2.10e. Subtracting the measurement of the flowmeter when no current flows through the magnet from the measurement when current flows through the magnet effectively cancels out the effect of noise.

When the magnetic field coils are energized by a normal direct current, several problems occur, such as polarization and electrochemical and electromechanical effects. Polarization is the formation of a layer of gas around the measured electrodes. Some of these problems may be overcome by

© 2003 by Béla Lipták

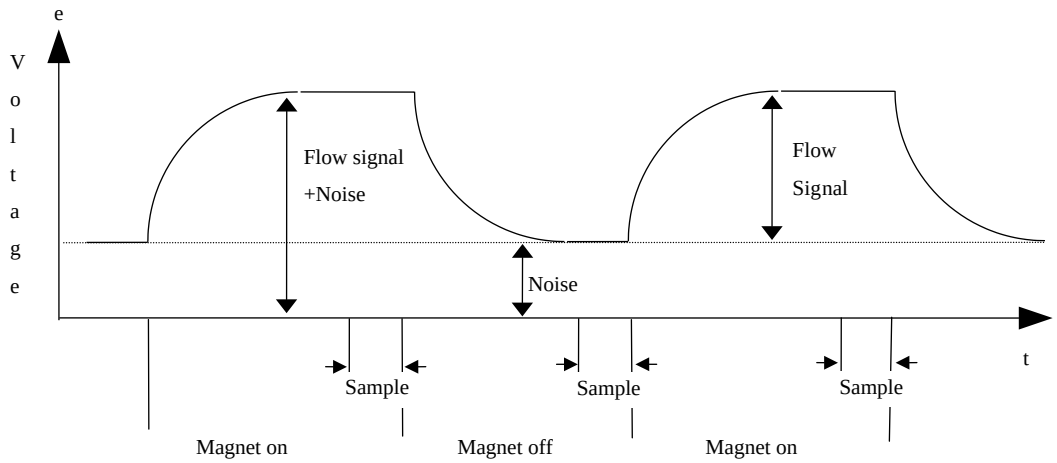

FIG. 2.10e

Signal development of pulsed DC-type magnetic flowmeter with half-wave excitation. As shown, the magnetic field is generated by a square wave which, in function, turns the magnet "on" and "off" in equal increments. When "on," the associated signal converter measures and stores the signal which is a composite of flow plus a variable (non-flow-related) residual voltage. During the "off" period, the converter measures the variable (non-flow-related) residual signal only. Since no field excitation is present, no flow signal will be generated. The converter then subtracts the stored residual signal from the flow developed-plus residual signal, resulting in the display of a pure flow signal.

energizing the field coils at higher frequencies. However, higher frequencies generate transformer action in the signal leads and in the fluid path. Therefore, the coils are excited by DC pulses at low repetition rates to eliminate the transformer action. In some flowmeters, by appropriate sampling and digital signal processing techniques, the zero errors and the noise can be rejected easily.

The pulsed DC-type systems establish zero during each on–off cycle. This occurs several times every second. Because zero is known, the end result is that pulsed DC systems are potential percent-of-rate systems. The AC-type systems must be periodically rezeroed by stopping flow and maintaining a full pipe so as to zero out any voltage present at that time.

The zero compensation inherent in the DC magnetic flowmeters eliminates the necessity of zero adjustment. This allows the extraction of flow signals regardless of zero shifts due to spurious noise or electrode coating. Unlike AC flowmeters, larger insulating electrode coating can be tolerated that may shift the effective conductivity significantly without affecting performance. As effective conductivity remains sufficiently high, a DC flowmeter will operate satisfactorily. Therefore, DC flowmeters are less susceptible to drifts, electrode coatings, and changes in the process conditions as compared with conventional AC flowmeters.

As a result of the slow, pulsed nature of their operations, DC magnetic flowmeters do not have good response times. However, so long as there are not rapid variations in the flow patterns, zero to full-scale response times of a few seconds do not create problems in most applications. Power requirements are also much less, because the magnet is energized only part of the time. This gives power savings of up to 75%.

If the DC current to the magnet is constant, the proportional magnetic field may be kept steady. Therefore, the amplitudes of the DC voltages generated at the electrodes will be linearly proportional to the flow. However, in practice, the current to the magnet varies slightly due to line voltage and frequency variations. As in the case of AC flowmeters, voltage and frequency variations may require the use of a reference voltage. Because the effect of noise can be eliminated more easily; the cabling requirements are not as stringent.

As mentioned before, polarization may be a problem in DC-type flowmeters. To avoid electrolytic polarization of the electrodes, bipolar pulsed DC flowmeters are available. Also, modification of the DC flowmeters has led to the development of miniature DC magnetic flowmeters that use wafer technology for a limited range of applications. The wafer design reduces weight and power requirements.

Dual-Frequency Excitation

Changing the method of excitation from line frequency (AC) to low frequency (DC) provided dramatic improvements in both the accuracy and the zero stability of magnetic flowmeters. Yet it did not represent the summit in technological advancements. A limitation of low-frequency (DC) designs is their relatively low response speed (0.2 to 2 sec) and their sensitivity to measurement noise caused by slurries or low-conductivity fluids.

The idea behind dual-frequency excitation is to apply both methods and thereby benefit from the advantages of both: the zero stability of low-frequency excitation and the good noise rejection and high-speed of response of high-frequency excitation. This is achieved by exciting the magnetic field coils by a current with such a compound wave, as illustrated in Figure 2.10f. One component is a low-frequency waveform, much below 60 Hz, which guarantees good

© 2003 by Béla Lipták

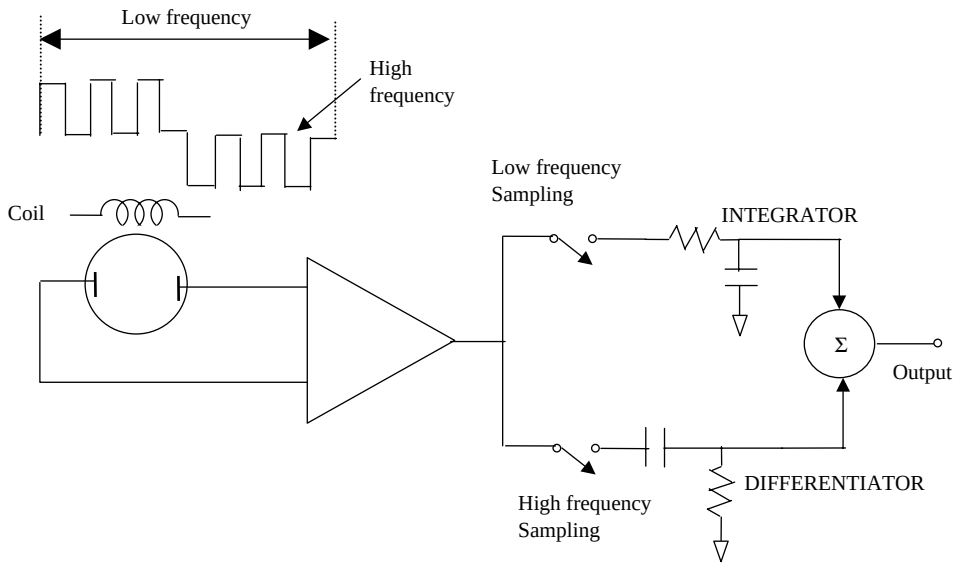

FIG. 2.10f
Dual-frequency excitation design combines the advantages of both systems.

zero stability. The output generated by the low-frequency signal is integrated via a long time constant to provide a smooth and stable flow signal.

The high-frequency component is superimposed on the low-frequency signal to provide immunity to noise caused by low conductivity, viscosity, slurries, and electrochemical reactions. The output generated by the high-frequency component is sampled at a high frequency and is processed in a differentiating circuit having the same time constant as the integrating circuit. By adding the two signals, the result is an output that is free of "slurry" noise and has good zero stability plus good response speed.

Other Types

Classification of magnetic flowmeters varies from one manufacturer to the next. A typical classification involves several types: wafer, flange, partially filled, micro-fractional, large-size, and sanitary. There are variations in the size of detectors and other features made suitable for a specific application. For example, micro-fractional detectors are designed to measure small amounts of fluids containing substances such as chemicals. The wetted materials are made from corrosion-resistant ceramic and platinum. They are lightweight, palm-size detectors suitable for use in 2.5-mm pipes. In contrast, in large-size types, the coils are arranged to measure uneven flows, and the flowmeters are made with improved noise suppression. The size can be as large as 3000 mm (120 in.).

CONSTRUCTION OF MAGNETIC FLOWMETERS

Figure 2.10g is a cutaway view showing how the principle of electromagnetic induction is employed in a practical flowmeter. The basic element of the flowmeter is a section of

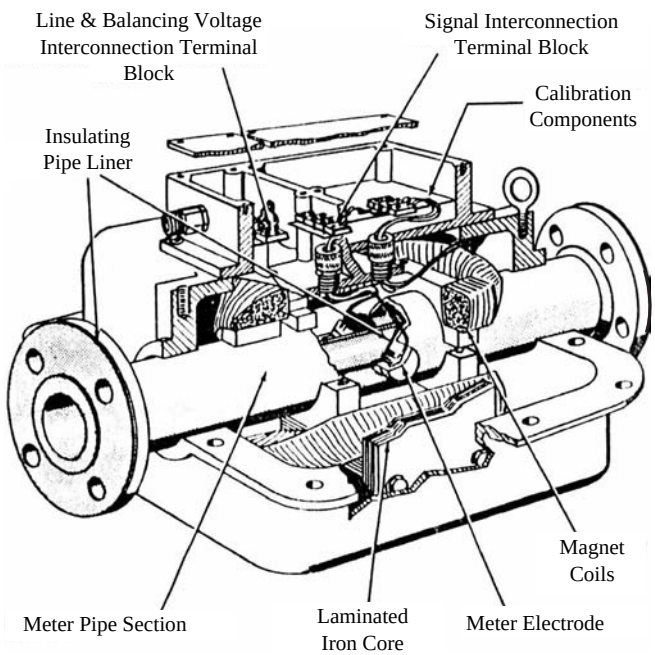

FIG. 2.10g
Cutaway view of the magnetic flowmeter.

nonconducting pipe such as glass-reinforced polyester or a nonmagnetic pipe section lined with an appropriate electrical conductor such as Teflon, Kynar, fiberglass, vitreous enamel, rubber, neoprene, or polyurethane, among others. On alternate sides of the pipe section are magnet coils that produce the magnetic field perpendicular to the flow of liquid through the pipe. Mounted in the pipe, but insulated from it and in contact with the liquid, is a pair of electrodes that are located at right angles both to the magnetic field and the axis of the pipe.

© 2003 by Béla Lipták

As the liquid passes through the pipe section, it also passes through the magnetic field set up by the magnet coils, inducing a voltage in the liquid; the amplitude of the voltage is directly proportional to the liquid velocity. This voltage is conducted by the electrodes to a separate converter that, in effect, is a precision voltmeter (electrometer) capable of accurately measuring the voltage generated and converting that voltage to the desired control signals. These may be equivalent electronic analog signals, typically 4 to 20 mA DC, or a frequency or scaled pulse output.

Most electromagnetic flowmeters are built with flanged end fittings, although the insert types are also common. Designs are available with sanitary-type fittings. In large pipe sizes, Dresser-type and Victaulic-type end connections are also widely used. Some electromagnetic flowmeters are made from replaceable flow tubes whereby the field coils are located external to the tubes. In these flowmeters, the flanges are located far apart so as to reduce their adverse effects on the accuracy of measurements; hence, they are relatively large in dimension. In others, the field coils are located closer to the flow tube or even totally integrated. In this case, the flanges could be located closer to the magnets and the electrodes, thus giving relatively smaller dimensions. On the other hand, the miniature and electrodeless magnetic flowmeters are so compact in size that face-to-face dimensions are short enough to allow them to be installed between two flanges.

The pipe between the electromagnets of a flowmeter must be made from nonmagnetic materials to allow the field to penetrate the fluid without any distortion. Therefore, the flow tubes are usually constructed of stainless steel or plastic. The use of steel is a better option, since it adds strength to the construction. Flanges are protected with appropriate liners, and they do not make contact with the process fluid.

The electrodes for the magnetic flowmeters must be selected such that they will not be coated with insulating deposits of the process liquid during long periods of operations. The electrodes are placed at positions where maximum potential differences occur. They are electrically isolated from the pipe walls by nonconductive liners to prevent short-circuiting of electrode signals. The liner also serves as protection to the flow tube to eliminate galvanic action and possible corrosion due to metal contacts. Electrodes are held in place by holders that also provide sealing. In some flowmeters, electrodes are cleaned continuously or periodically by ultrasonic or electrical means. Ultrasonics are specified for AC- and DC-type magnetic flowmeters when frequent severe insulating coating is expected on the electrodes that might cause the flowmeter to cease to operate in an anticipated manner.

Versions of magnetic flowmeters are available for periodic accidental submergence and for continuous submergence in water at depths of up to 30 ft (9 m). An outgrowth of the continuous submergence design is a sampling type (pitot). The pitot-type magnetic flowmeter samples the flow velocity in large rectangular, circular, or irregularly shaped pipes or conduits. A typical design is shown in Figure 2.10h. A small magnetic flowmeter is suspended in the flow stream. The magnet coils are completely encapsulated in the liner material, allowing submersion in the liquid to be measured. The short length of the meter body and the streamlined configuration are designed to minimize the difference between the flow velocity through the meter and the velocity of the liquid passing around the meter. The velocity measurement

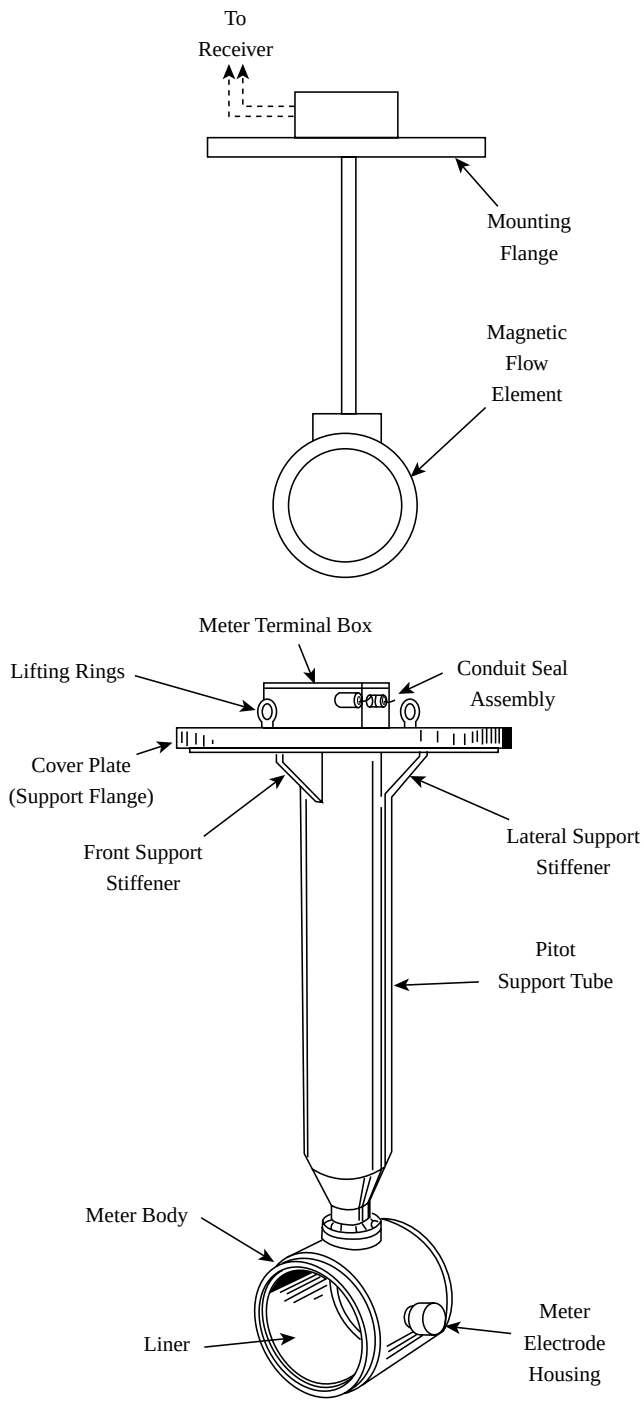

FIG. 2.10h
Pitot-type magnetic flowmeter.

© 2003 by Béla Lipták

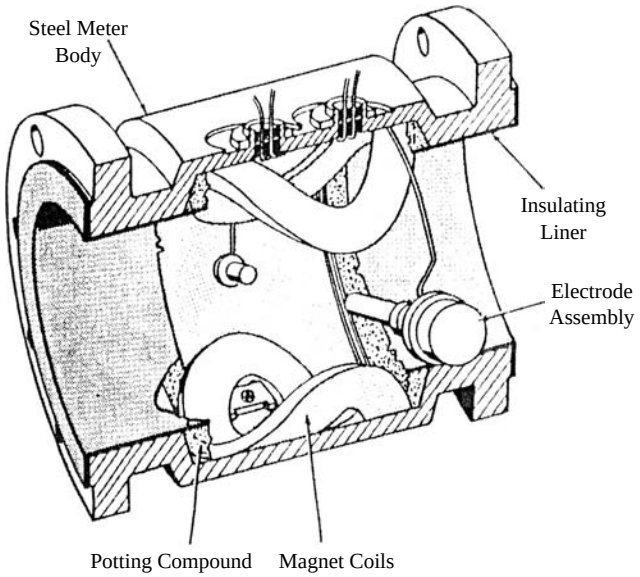

FIG. 2.10i
The short-form magnetic flowmeter.

of the liquid through the meter is assumed to be representative of the pipe velocity. Repeatability of the system is typically 0.25 to 0.5% of full scale. As with any sampling-type flowmeter, the information from the flowmeter is representative only of the flow through the flowmeter. It is the user's responsibility to relate that "sampled" velocity to the average velocity in the pipe, which reflects the total volumetric flow rate. When applying any sampling-type flowmeter, including the pitot-type magnetic flowmeter, substantial errors can occur in applications where the velocity profile can change due to changes in Reynolds number or due to the effects of upstream piping configuration.

Most manufacturers construct their flowmeters with coils external to the meter pipe section. Some designs place the coils within the flowmeter body, which is made from carbon steel to provide the return path for the magnetic filed as in Figure 2.10i. In this design, the meters can be shorter, have reduced weight, and offer lower power consumption. The lowest power consumption is a feature of the pulsed DC design, because its coils are energized only part of the time. An additional saving with pulsed DC types is that the power factor approaches 1.

Ceramic Liners

The use of ceramic liners represents a major improvement in the design of magnetic flowmeters, because they cost less to manufacture and also provide a better meter. Ceramic materials such as Al_2O_3 are ideal liner materials, because their casting is inexpensive, they are electrically nonconductive, and they are abrasion- and wear-resistant. In contrast with plastic liners, they can be used on abrasive slurry services (pipelining of minerals or coal), and their inner surfaces can be scraped with wire brushes to remove hardened coatings. Ceramic units are also preferred for sanitary applications because they do not provide any cavities in which bacteria can accumulate and grow. Ceramic meters can also handle higher temperatures (360°F, 180°C) than Teflon-lined ones (250°F, 120°C). Magnetic flowmeters are velocity sensors and, to convert velocity into volumetric flow rate, the pipe cross section has to be constant. Therefore, the ceramic liners have the added advantage of expanding and contracting less with changes in temperature than do metals or plastics. Ceramic liners are also preferred by the nuclear industry because they are not affected by radiation, whereas plastics are destroyed by it.

The design of the ceramic insert-type magnetic flowmeter also eliminates the possibility of leakage around the electrodes. This perfect seal is produced by allowing a droplet of liquid platinum to sinter through the ceramic wall of the liner. Through this process, the ceramic particles and the platinum fuse into a unified whole, providing not only a perfect seal but also a permanent, rugged, and corrosion-resistant electrode. This electrode cannot move, separate, or leak.

For the reasons listed above, the ceramic insert-type magnetic flowmeter is an improvement. However, it also has some limitations. One of its limitations has to do with its brittle nature. Ceramic materials are strong in compression but should not be exposed to pipe forces that cause tension or bending. Another possible way to crack the ceramic lining is by sudden cooling. Therefore, these elements should not be exposed to downward step changes in temperature that exceed 90°F (32°C). Another limitation of the Al_2O_3 ceramic liner is that it cannot be used with oxidizing acid or hot, concentrated caustic applications (over 120°F, 50°C).

Probe-Type Units

The probe-type magnetic flowmeter is an "inside out" design in the sense that the excitation coil is on the inside of the probe, as shown in Figure 2.10j. As the process fluid passes through the magnetic field generated by the excitation coil inside the probe, a voltage is detected by the electrodes that are embedded in the probe. The main advantage of this design is its low cost, which is not affected by pipe size, and its retractable nature, which makes it suitable for wet-tap installations. The probe-type magmeter is also suited for the measurement of flow velocities in partially full pipes or in detecting the currents in open waters. When water flow is not constrained by a pipe, flow velocity has to be expressed as a three-dimensional vector. By inserting three magmeter probes parallel with the three axes, one can detect that vector.

The main disadvantage of the magmeter probe is that it detects the flow velocity in only a small segment of the cross-sectional area of the larger pipe. Therefore, if the flowing velocity in that location is not representative of the rest of the cross section, a substantial error can result.

© 2003 by Béla Lipták

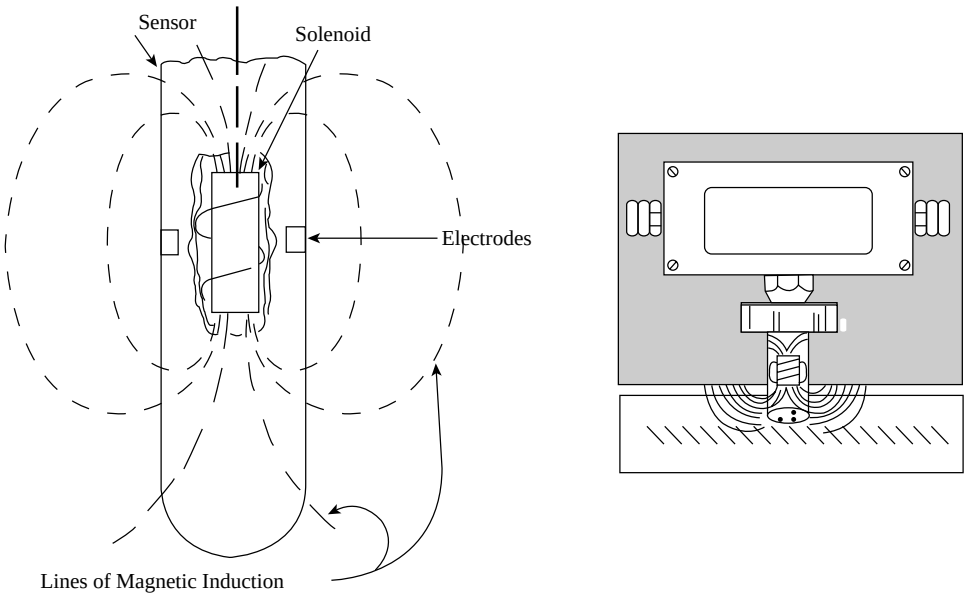

FIG. 2.10j
The probe-type magnetic flowmeter.

TABLE 2.10k
Sizes and Capacities of Commonly Used Electromagnetic Flowmeters

			Flow Rate (m^3/h)			*Standard Flow Range*	
Meter Size (mm)	*Dimensions (mm)*	*Weight (kg)*	*0.3 m/s*	*1.0 m/s*	*10 m/s*	*m^3/h*	*m/s*
15	70 × 180 × 50	3	0.191	0.636	6.360	2	3.125
25	80 × 170 × 65	3	0.530	1.770	17.67	6	3.400
40	100 × 240 × 85	6.5	1.357	4.525	45.25	15	3.315
50	110 × 260 × 100	7	2.120	7.067	70.67	25	3.540
80	110 × 280 × 125	8	5.428	18.10	180.9	60	3.315
100	120 × 315 × 160	10	8.482	28.30	282.7	100	3.540
150	230 × 390 × 215	22	19.10	63.61	636.1	200	3.125
200	300 × 440 × 270	36	33.90	113.1	1131.0	300	2.655

APPLICATIONS OF MAGNETIC FLOWMETERS

In the applications of magnetic flowmeters, a number of considerations must be taken into account, including the following:

- Cost, simplicity, precision, and reproducibility
- Metallurgical aspects
- Velocity profiles and upstream disturbances

During the selection of electromagnetic flowmeters, the size of the required flowmeter, the process characteristics and existing structure, and the velocity constraints should be evaluated carefully to secure accurate performance over the expected range. Table 2.10k illustrates the typical sizes and capacities of most commonly available flowmeters. The full-scale velocity of the flowmeter is typically 0.3 to 10 m/sec. Some flowmeters can measure lower velocities, with somewhat poorer accuracy. Generally, employment of electromagnetic flowmeters over a velocity of 5 m/sec should be considered carefully, since erosion of the pipe and the damage to liners can be significant. In all applications, determining the size of the flowmeter is a matter of selecting the one that can handle the liquid velocities. The anticipated liquid velocity must be within the linear range of the device. The capacities of various sizes of flowmeters are given in Figure 2.10l as a typical guide for selection.

Magnetic flowmeters are the first to be considered for very corrosive applications and for applications involving measurement of abrasive and/or erosive slurries. They are widely used in pulp and paper stock measurement and other non-Newtonian applications. They can be used for very low flow rates; pipe inside diameters as small as 0.1 in. (2.5 mm) are offered that can handle flow ranges as low as 0.01 to 0.1 GPM (0.038 to 0.38 l/min). Magnetic flowmeters are also available in pipe sizes up to 120 in. (3 m).

© 2003 by Béla Lipták

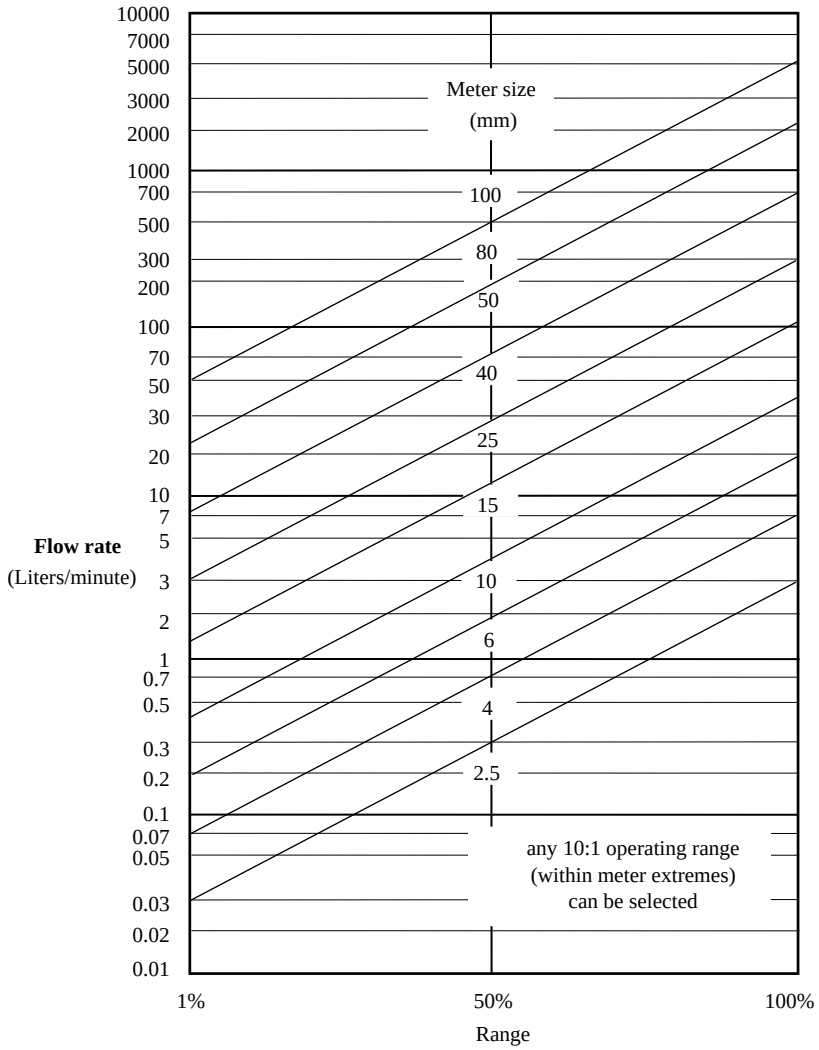

FIG. 2.10l

Selection of flowmeters: In the selection of a suitable flowmeter for a particular application care must be exercised for handling the anticipated liquid velocities. The velocity of liquid must be within the linear range of the device. For example, a flowmeter with 100 mm internal diameter can handle flows between 50 L/min to 4000 L/min. An optimum operation will be achieved at flow-rate of 500 L/min.

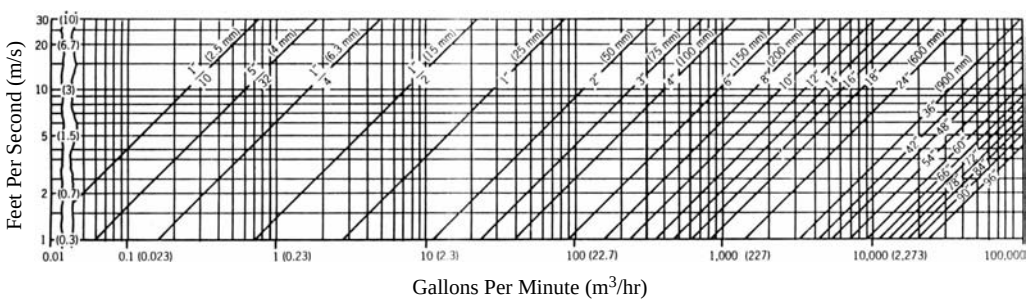

FIG. 2.10m

Magnetic flowmeter capacity nomograph.

Figure 2.10m is a nomograph for magnetic flowmeter capacities. Magnetic flowmeters have an excellent operating range of at least 100:1. For AC types, typical inaccuracy is ±1% of full scale. To improve performance, range is usually divided into two portions and automatically switched between the two. Pulsed DC-types have typical inaccuracy of ±1% of rate applicable to a 10:1 range or ±0.5% of rate over a 2:1 or 5:1 range, and at flow rates below 10% of maximum it is on the order of ±0.1% of full scale. The converter can be set for 20 mA output at any flow between 10 and 100% of meter

© 2003 by Béla Lipták

capacity and still have at least a 10:1 operating range. This ability to field set or reset the meter for the actual operating conditions provides optimal performance.

Most processes employ circular piping that adds simplicity in the construction of the system. The flowmeters connected to circular pipes give relatively better results as compared to rectangular or square-shaped pipes, and velocity profiles of the liquid are not affected by the asymmetry. However, in circular pipes, the fringing of the magnetic field may be significant, making it necessary to employ empirical calibrations.

Upstream and downstream straight piping requirements may vary from one flowmeter to another, depending on the manufacturer's specifications. As a rule of thumb, the straight portion of the pipe should be at least 5D/2D from the electrodes and 5D/5D from the face of the flowmeter in upstream and downstream directions, respectively. For a good accuracy, the recommendations of manufacturers for piping requirements should be carefully observed. In some magnetic flowmeters, coils are used in such a way that the magnetic field is distributed in the coil to minimize the piping effect.

Magnetic flowmeters are often used to measure explosive fluids in hazardous environments. In these applications, explosion-proof housings are absolutely essential. The construction and specifications of such housings are regulated by authorities such as the European Committee for Electrotechnical Standardization (CENELEC). Usually, integral or remote electronics are offered for mounting flexibility and reliability. In many instruments, the electronic circuitry is separated from field wiring terminations by a dual-compartment housing and an integral backlit LCD design that provides an easy operator interface.

Accuracy and Calibration

The power consumption of a conventional (high-frequency AC excited) 2-in. (50-mm) flowmeter is about 30 W. For a 30-in. (76-cm) flowmeter, it is about 300 W. Low-frequency DC excitation has reduced the power consumption of some magnetic flowmeters to 20 W, regardless of meter size. The accuracy of conventional magnetic flowmeter is usually expressed as a function of full scale, typically 0.5 to 1% FS. However, DC flowmeters have a well-defined zero due to an automatic zeroing system; therefore, they have percentage rate of accuracy better than AC types (typically 0.5 to 2%).

Magnetic flowmeters do not require continuous maintenance other than periodic calibrations. Nevertheless, electrode coating, damage to the liners, and electronic failures may occur. Any modifications and repairs must be treated carefully because, when installed again, some accuracy may be lost. After each modification or repair, recalibration may be necessary.

Calibration of electromagnetic flowmeters is achieved with a magnetic flowmeter calibrator or by electronic means. The magnetic flowmeter calibrators are precision instruments that inject simulated output signals of the primary flowmeter into the transmitter. Effectively, this signal is used to check correct operation of electronic components and make adjustments to the electronic circuits. Alternatively, calibrations can also be made by injecting suitable test signals to discrete electronic components. In some cases, empirical calibrations must be performed at zero flow while the flowmeter is filled with the stationary process liquid.

Zero adjustment of AC magnetic flowmeters requires compensation for noise. If the zero adjustment is performed with a fluid other than process fluid, serious errors may result because of possible differences in conductivities. Similarly, if the electrodes are coated with an insulating substance, the effective conductivity of the electrodes may be altered, causing a calibration shift. If the coating changes with time, the flowmeter may continually require calibration for repeatable readings.

Errors in Magnetic Flowmeters

Operation of a magnetic flowmeter is generally limited by factors such as liner characteristics, pressure ratings of flanges, and temperatures of the process fluids. The maximum temperature limit is largely dependent on the liner material selection and usually is set to around 120°C. For example, the ceramic liners can withstand high temperatures but are subject to cracking subjected to sudden temperature changes in the process fluid.

For accurate measurements, magnetic flowmeters must be kept full of liquid at all times. If the liquid does not contact the electrodes, no measurements can be taken. Figure 2.10n illustrates this point. If the measurements are made in flows other than vertical, the electrodes should be located in horizontal directions to eliminate the possible adverse effect of the air bubbles, given that air bubbles tend to concentrate on the top of the liquid.

Often, the magnetic flowmeter liners are damaged by the presence of debris and solids in the process liquid. Also, the use of incompatible liquid with the liners, wear due to abrasion, and excess temperature during installations and removals can contribute to the damage of liners. The corrosion in the electrodes

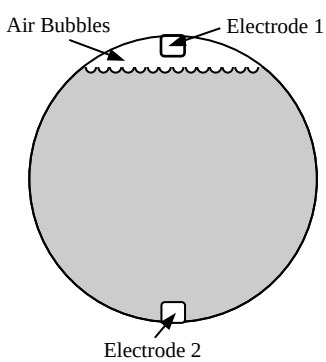

FIG. 2.10n
The pipes of electromagnetic flowmeters must be full of liquid at all times for accurate measurements. If the liquid does not make full contact with electrodes the high impedance prevents the current flow hence measurements cannot be taken. Also, If the pipe is not full, even if contact is maintained between the liquid and electrodes, the empty portions of the pipe will lead to miscalculated flow rates.

© 2003 by Béla Lipták

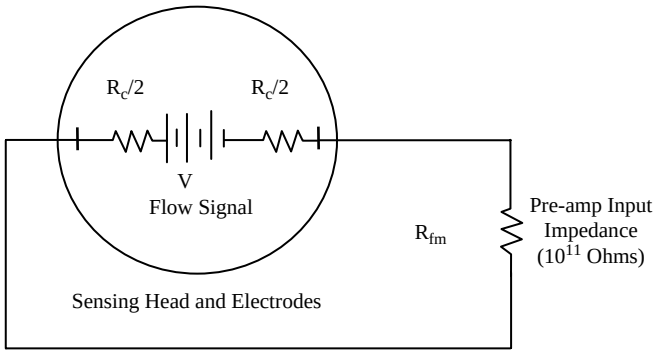

FIG. 2.10o
Increased flowmeter impedance (R_{fm}) reduces coating error.

may also be a contributing factor for the damage. In some cases, magnetic flowmeters may be repaired on site if severe damage occurs; in others, they must be shipped to the manufacturer for repairs. Usually, manufacturers supply spare parts for electrodes, liners, flow tubes, and electronic components.

Grease and other nonconductive electrode coatings introduce an error in the measurement, because the voltage generated by the conductive fluid is measured by the magmeter electronics as a voltage drop across its input impedance R_{fm} as in Figure 2.10o. When there is an electrically resistant coating on the electrodes, some of the voltage generated by the conductive liquid drops across the coating, and less of it remains to be detected by the input impedance. The resulting error percentage can be calculated as follows:

$$E = 100R_c/(R_{fm} + R_e) \qquad \textbf{2.10(6)}$$

Coating resistance (R_c) can reach 10^7, and if the input impedance (R_{fm}) in similar, substantial errors will result. In some newer designs, the input impedance of the flowmeter has been increased to $R_{fm} = 10^{11}$. Even at a coating impedance of $R_c = 10^7$, this limits the coating error to 0.01%. With such high-impedance electronics, the need for electrode cleaning is minimized or eliminated.

The meter's electrodes must remain in electrical contact with the fluid being measured and should always be installed in the horizontal plane. In applications where a buildup or coating of the inside wall of the flowmeter occurs, periodic "flushing" or cleaning is recommended. Coatings can have conductivities that are the same, lower, or higher than the liquid. These effects are significantly different. Where the conductivity of the coating is essentially the same as that of the liquid, there is no effect on the accuracy of the measurement except for the effect of a reduced cross-sectional area. This can be viewed as a specific profile condition, and the meter will average the velocity to give the correct value for the particular flow rate. Fortunately, this is the most common coating condition. If the conductivity of the coating is significantly lower than that of the liquid being measured, the electrically insulating coating can disable the meter. If periodic cleaning is not possible, mechanical, ultrasonic, thermal, and other electrode cleaning techniques can be applied. Manufacturers also offer specifically shaped protruding electrodes to take advantage of the self-cleaning effect of the flow at the electrode. If the conductivity is higher than that of the process fluid, no corrective measure is needed.

EFFECTS OF ELECTRICAL CONDUCTIVITY OF FLUID

For electromagnetic flowmeters to operate accurately, the process liquid must have minimum conductivity of about 1 to 5 μS/cm. Most common applications involve liquids whose conductivity is greater than 5 μS/cm. Nevertheless, for accurate operations, the requirement for the minimum conductivity of liquid can be affected by length of leads from sensors to transmitter electronics. For example, the resistance between electrodes may be approximated by $R = 1/\delta d$, where δ is the fluid conductivity and d is the electrode diameter. For tap water, $\delta = 200$ μS/cm, for gasoline $\delta = 0.01$ μS/cm, and for alcohol 0.2 μS/cm. A typical electrode with a 0.74-cm diameter in contact with tap water results in a resistance of 6756 Ω.

Application of magnetic flowmeters can be realized only with conductive liquids such as acids, bases, slurries, foods, dyes, polymer emulsions, and suitable mixtures that have conductivities greater than the minimum conductivity requirements. Generally, magnetic flowmeters are not suitable for liquids containing organic materials and hydrocarbons. As a rule of thumb, magnetic flowmeters can be applied if the process liquids constitute a minimum of about 10% conductive liquid in the mixture.

Most liquids or slurries are adequate electrical conductors to be measured by electromagnetic flowmeters. If the liquid conductivity is equal to 20 μS/cm or greater, most of the conventional magnetic flowmeters can be used. Special designs are available to measure the flow of liquids with threshold conductivities as low as 0.1 μS/cm. Some typical electrical conductivities are as shown in the following table.

Liquid (at 25°C except where noted)	*Conductivity, μS/cm*
Acetic acid (up to 70% by weight)	250 or greater
Ammonium nitrate (up to 50% by weight)	360,000 or greater
Molasses (at 50°C)	5000
Ethyl alcohol	0.0013
Formic acid (all concentrations)	280 or greater
Glycol	0.3
Hydrochloric acid (up to 40% by weight)	400,000 or greater
Kerosene	0.017
Magnesium sulfate (up to 25% by weight)	26,000 or greater
Corn syrup	16
Phenol	0.017
Phosphoric acid (up to 87% by weight)	50,000 or greater
Sodium hydroxide (up to 50% by weight)	40,000 or greater
Sulfuric acid (up to 99.4% by weight)	8500 or greater
Vodka (100 proof)	4
Water (potable)	70

© 2003 by Béla Lipták

The effect of conductivity changes above the threshold conductivity may be minimal, but the effect of liquid operating temperature on the threshold conductivity should be considered. Most liquids have a positive temperature coefficient of conductivity. Liquids that are marginal at one temperature can become nonconductive enough at a lower temperature to impair metering accuracy. At a higher temperature, the same liquid may be metered with good results. There are a few liquids that have a negative temperature coefficient; these should be carefully checked for their minimum conductivity before applying magnetic flowmeters.

Magnetic flowmeters are not affected by viscosity or consistency (referring to Newtonian and non-Newtonian fluids, respectively). The changes in flow profile resulting from changes in Reynolds numbers, or from upstream piping, do not greatly affect the performance of magnetic flowmeters. The voltage generated is a summation of the incremental voltages across the entire area between the electrodes, resulting in a measure of the average fluid velocity. Nevertheless, it is recommended to install the meter with 5 diameters of straight pipe before it and 3 diameters of straight pipe following it.

INSTALLATION

The signal detected by magnetic flowmeter electrodes is in the high microvolt to low millivolt range. Proper electrical installation and grounding is mandatory. Individual manufacturer's recommendations for installation are the result of extensive experience and should be scrupulously followed, as illustrated in Figure 2.10p.

Alternating-current-type magnetic flowmeters occasionally shift their no-flow indication after some operating time, requiring a zero reset. One of the most important installation considerations with electromagnetic flowmeters is a proper *bonding* of the flowmeter to the adjacent piping to minimize zero shifts. The intent of this bonding, or *jumpering*, is to prevent stray currents from passing through the flowmeter near the electrodes. Magnetic flowmeters are lined with an electrically insulating material; generally, this lining covers the flange face of the meter, making the meter an electrical discontinuity in the system. The flange bolts should not be used for bonding, given that rust, corrosion, paint, and other insulating materials can create an insulating barrier between the bolts and the flanges. Manufacturers supply, and insist on, the installation of copper braid jumpers from the meter flange to the pipe flange at either end of the flowmeter. The jumpers provide a continuous path for the stray currents, which guarantees a more stable zero. It is also essential to install a ground strap to a grounded piece of structural steel, a grounding rod, or a conductive cold water pipe.

We can eliminate the above-described installation process, which involves labor-intensive drilling, tapping, and strapping of adjacent pipe flanges in metallic pipes or the installation of expensive grounding rings in lined or nonconductive pipes, if the magmeter is provided with built-in grounding electrodes. When installing the flowmeter, the grounding electrode must always be at the bottom and must be connected to the third-wire ground of the power input.

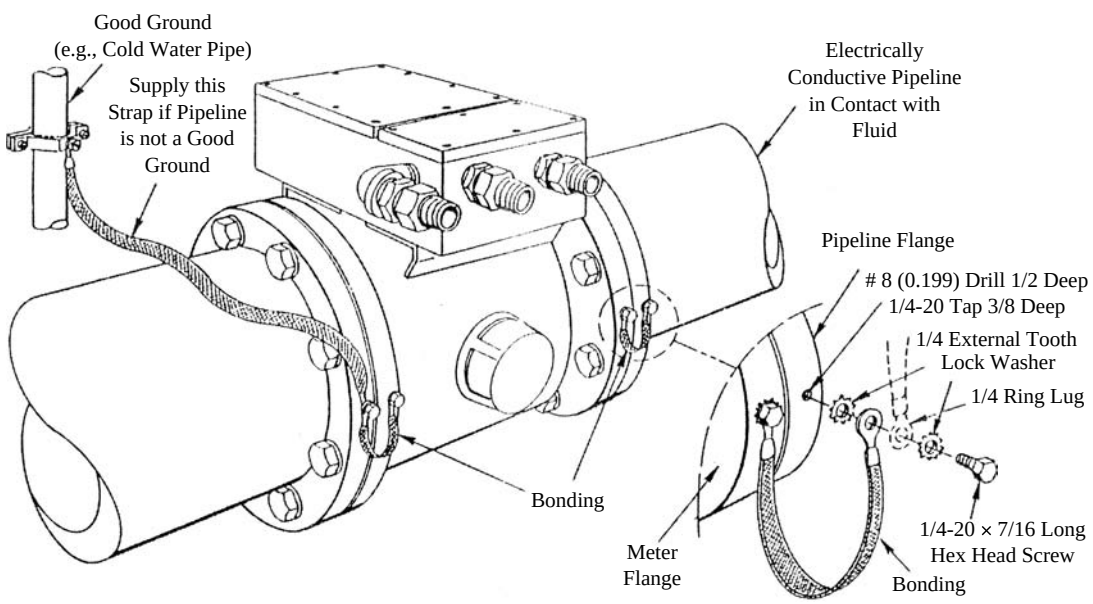

FIG. 2.10p

Typical bonding and grounding procedure. A good grounding is absolutely essential to isolate noise and high common mode potential. If the pipe is conductive and makes contact with the liquid the flowmeter should be grounded to the pipe. If the pipe is made from nonconductive materials, the ground rings should be installed to maintain contact with the process liquid. Improper grounding results in excessive common mode voltages that can severely limit the accuracy and damage the processing electronics.

© 2003 by Béla Lipták

The conservative installation of magnetic flowmeters requires 3 to 5 diameters of straight pipe, the same size as the flowmeter, to be installed upstream from the meter, plus 2 or 3 diameters downstream. Meters can be installed in horizontal pipelines, vertical pipelines, or sloping lines. It is essential to keep the electrodes in the horizontal plane to ensure uninterrupted contact with the liquid or slurry being metered. In gravity-feed systems, the meter must be kept continually full; therefore, the meter should be installed in a "low point" in horizontal lines or, preferably, in a vertical upflow line.

SIGNAL CONSIDERATIONS AND DEMODULATION TECHNIQUES

Each magnetic flowmeter requires electronics to convert the electrode output into a standardized analog or digital signal. The electronics can be mounted locally, directly on the flowmeter, or remotely. Integral mounting simplifies the installation, reduces cost, and eliminates the noise and other problems associated with the transmission of a low-level signal over a relatively long distance. The advantages of remote mounting include the reduced headroom requirement for the meter, accessibility, operator convenience, and the distancing of the sensitive electronics from the high-temperature or otherwise undesirable environment of the flowmeter. If shielded, twisted wires are used, the electronics can be 200 ft (67 m) from the meter.

The housings of the electronics can be designed for indoor or outdoor use and for general-purpose or hazardous environments. The converters can serve several flowmeters simultaneously and provide for interfacing with computers. The displays can provide flow rate or total flow indication. "Smart" magmeters provide the added features of self-diagnostic and detection of coil/converter/metering tube failure or of empty pipe, as well as switching, alarming, flow integration, and preset batching functions. They can also detect pipe blockage; signal erroneous settings; or change the range, engineering units, damping times (63% response time settable from 0.1 to 100 sec), or even the flow direction of metering.

Magnetic flowmeters are essentially four-wire devices that require an external power source for operations. Particularly in AC magnetic flowmeters, the high-voltage power cables and low-voltage signal cables must run separately, preferably in different conduits. In contrast, for DC magnetic flowmeters, the power and signal cables can be run in one conduit. This is because, in DC-type magnetic flowmeters, the voltage and the frequency of excitation of the electromagnets are much lower. Some manufacturers supply special cables along with their flowmeters.

Despite beliefs to the contrary, magnetic flowmeters demonstrate a certain degree of sensitivity to flow profiles. Another important aspect is the effect of turbulence. Unfortunately, there is very little information available on the behavior of turbulent flows when they are in transverse magnetic fields. Figure 2.10q shows an example of flow profile in which the velocity profile perturbed. The fluid is being retarded near the center of the channel and accelerated at the top and bottom near the electrodes.

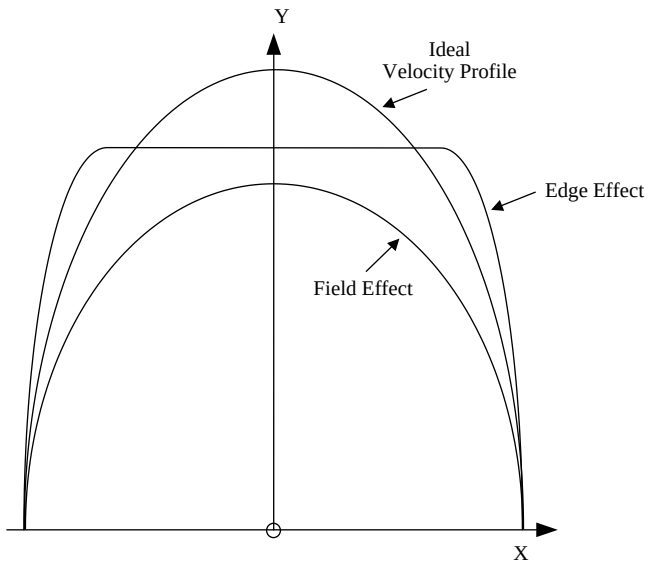

FIG. 2.10q
Flow profiles in the pipes. Magnetic flowmeters demonstrate a certain degree of sensitivity to flow profiles. The ideal velocity profile may be distorted due to edge effects and also field effects known as magneto-hydrodynamics. In some applications the velocity perturbation due to magneto-hydrodynamic effect may be serious enough to severely influence the accuracy of operations.

In AC flowmeters, the electrode signals may be amplified much more readily as compared with their DC counterparts. That is why AC flowmeters have been used successfully to measure very low flow rates as well as the flow of very weakly conducting fluids. Nevertheless, AC flowmeters tend to be more complicated, bulky, and expensive, and they require electromagnets with laminated yokes along with stabilized power supplies. In some magnetic flowmeters, it is feasible to obtain sufficiently large flow signal outputs without the use of yoke by means of producing magnetic fields by naked coils. In this case, the transformer action to the connecting leads may be reduced considerably.

One of the main drawbacks of AC-type flowmeters is that it is difficult to separate the signals caused by transformer action from the useful signals. The separation of the two signals is achieved by exploiting the fact that the flow-dependant signal and the transformer signal are in quadrature. That is, the useful signal is proportional to the field strength, and the transformer action is proportional to the time derivative of the field strength. The total voltage *vT* can be expressed as

$$v_T = v_F + v_t = V_F \sin(\omega t) + V_t \cos(\omega t) \qquad \textbf{2.10(7)}$$

where v_F is the induced voltage due to liquid flow, and v_t is the voltage due to transformer action on wires, and so on.

© 2003 by Béla Lipták

Phase-sensitive demodulation techniques can be employed to eliminate the transformer action voltage. The coil magnetizing current, $i_m = I_m \sin(\omega t)$ is sensed and multiplied with the total voltage v_T giving

$$v_T\, i_m = [V_F \sin(\omega t) + V_t \cos(\omega t)]\, I_m \sin(\omega t) \qquad \textbf{2.10(8)}$$

Integration of Equation 2.11(8) over one period between 0 and 2π eliminates the transformer voltage, yielding only the voltage that is proportional to the flow.

$$V_f = V_F I_m \pi \qquad \textbf{2.10(9)}$$

where V_f is the voltage after integration. This voltage is proportional to the induced voltage modified by constants I_m and π.

In reality, this situation can be much more complicated because of phase shift due to eddy currents in nearby solids and conductors. Other reasons for complexity may be the result of harmonics because of nonlinearities such as hysteresis, or caused by capacitive pickup.

Particularly in AC flowmeters, if the flowmeter is not grounded carefully relative to the potential of the fluid in the pipe, then the flowmeter electrodes may be exposed to excessive common-mode voltages that can severely limit the accuracy. In some cases, excessive ground potential can damage the electronics, because the least-resistance path to the ground for any stray voltage in the liquid would be via the electrodes.

Some commercial magnetic flowmeters have been developed that can operate on sawtooth or square waveforms. Standardized magnetic flowmeters and calibration data still do not exist, and manufacturers use their own particular design of flow channels, electromagnets, coils, and signal processors. Most manufacturers provide their own calibration data.

Bibliography

Baird, J., Innovations in magnetic flow meters, in *Proc. ISA/93 Tech. Conf.*, Chicago, IL, 1993.

Bates, C. J., Performance of two electromagnetic flowmeters mounted downstream of a 90 degrees mitre bend/reducer combination, *Measurement*, 27:3, 197–206, 2000.

Bentley, J. P., *Principles of Measurement Systems*, 2nd ed., Longman Scientific and Technical, UK, 1988.

Bonfig, K. W. and Feith, B., Magnetic inductive flow measurement at open channels, *Mess Pruef*, January/February 1982.

Cascetta, F., *Flowmeters: A Comprehensive Survey and Guide to Selection*, Instrument Society of America, Research Triangle Park, NC, 1988

Dellerson, A. N., Magmeters: leaders in flow technology, *InTech*, July 1989.

Doebelin, E. O., *Measurement Systems: Application and Design*, 4th ed., McGraw-Hill, New York, 1990.

Eastman, P. C., Brodie, D. E. and Sawyer, D. J., A magnetic flowmeter with concentric electrodes, *Instrum. Technol.*, 52–55, June 1970.

Elrod, H. J. and Fouse, R. R., An investigation of electromagnetic flowmeters, *Trans. ASME*, 74, 589–594, 1952.

Endou, A., Response analysis of electromagnetic flowmeter, *Nuclear Technology*, 114:3; 285–291, 1996.

Eren, H., *Electromagnetic Flowmeters, Mechanical Variables Measurement—Solid, Fluid and Thermal*, John G. Webster (Editor), CRC Press, Boca Raton, FL, p. 9:63–74, 2000.

Eren, H., *Flowmeters, Survey of Instrumentation and Measurement*, Stephen A. Dyer (Editor), John Wiley & Sons, New York, p. 568–580, 2001.

Head, V. P., Electromagnetic flowmeter primary elements, *ASME J. Basic Eng.*, Paper 58-A-126, 1958.

Hemp, J., A technique for low cost calibration of large electromagnetic flowmeters, *Flow Meas. Instrum.*, 12:2, 123–134, 2001.

Holman, J. P., *Experimental Methods for Engineers*, 5th ed., McGraw-Hill, New York, 1989.

Kolin, A., An alternating field induction flowmeter of high sensitivity, *Rev. Sci. Instrum.*, 16, 109–116, 1945.

Kuroki, Y. et al., Viscous flow measurement using electromagnetic flowmeter, ISA/93 Technical Conference, Chicago, IL, 1993.

Lilla, R., Ceramic-liner electromagnetic flowmeters, *Meas. Control*, April 1991.

Ostling, H., Dual-frequency excitation sets new magmeter performance standard, *Control Eng.*, September 1990.

Robinson, C., Obstructionless flowmeters: smooth sailing for some, rough passage for others, *InTech*, 33(12), 33–36, 1986.

Scarpa, T. J., Flow velocity profiles, *Meas. Control*, September 1992.

Shercliff, J. A., *Electromagnetic flow-measurements*, Cambridge University Press, UK, 1987.

Spitzer, D. W., *Industrial Flow Measurement*, ISA, Research Triangle Park, NC, 1990.

VanLark, F., Application limits of electromagnetic flow meters, in *Proc. ISA/92 Conference*, Houston, TX, 1992.

Webb, A. S., Electromagnetic flowmetering, *Instrum. Technol.*, 29–33, March 1974.

Zhang, K. Z., Flow by electromagnetic probe, in *Proc. ISA/93 Technical Conference*, Chicago, IL, 1993.

© 2003 by Béla Lipták

2.11 Mass Flowmeters, Coriolis

CATHY APPLE (1995) **MARTIN ANKLIN, WOLFGANG DRAHM** (2003)

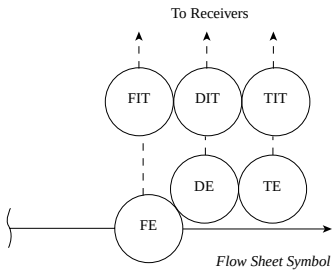

Flow Sheet Symbol

Measured Variables	Mass flow, volume flow, density and temperature
Sizes	1/25 to 10 in. (1 to 250 mm)
Flow Range	0 to 63,000 lb/min (0 to 28,300 kg/min)
Fluids	Liquids, slurries, gases (compressed, low-pressure, etc.), liquefied gases; not gas-liquid mixtures
Output Signal	Linear frequency, analog, digital (HART, Profibus, FOUNDATION™ fieldbus, Modbus, scaled-pulse, display, alarm outputs, manufacturer-specified protocols)
Operating Pressure	Depends on tube size and flange rating: 1400 PSIG (100 bar) typical standard rating; 5000 PSIG (345 bars) typical high-pressure rating
Pressure Drop	Function of flow, viscosity, and design, varying from very low (<0.1 PSIG, 10 mbar) to moderately high (22 PSIG approximately 1.5 bar)
Operating Temperature	Depends on design: –60 to 400°F (–50 to 200°C) typical standard; 32 to 800°F (0 to 426°C) high-temperature, special versions also used for cryogenic applications
Materials of Construction	Stainless steel, Hastelloy®, titanium; special materials as tantalum, zirconium and others are available
Inaccuracy	±0.1% of rate ± (zero offset/mass flow rate) × 100% Zero offset depends on size and design of the flowmeter; for a 1-in. (25-mm) meter with a typical maximum flow rate of 650 lb/min (18,000 kg/h), the zero offset is typically 0.04 lb/min (0.9 kg/h), which is below 0.01% of the maximum flow value. Typical: 0.15% within the range of 10:1 of full-scale flow rate (FS) and 1% within the range of 100:1 of FS
Repeatability	Typical: 0.075% within the range of 10:1 of FS and 0.5% within the range of 100:1 of FS
Rangeability	Up to 100:1
Cost	Depends on size and design: 1/25 in. (1 mm), $5000; typical 1-in. (25-mm) meter, $7000; 6-in. (150-mm), $27,500
Partial List of Suppliers	ABB (www.abb.com) Bopp & Reuther (www.burhm.de) Danfoss A/S (www.danfoss.com)

© 2003 by Béla Lipták

Endress+Hauser Inc. (www.endress.com)
The Foxboro Co. (www.foxboro.com)
Krohne (www.krohne.com)
Micro Motion Inc. (www.emersonprocess.com)
Oval (www.oval.co.jp)
Rheonik (www.rheonik.de)
Schlumberger Industries (www.slb.com)
Smith Systems Inc. (www.smith-systems-inc.com)
Yokogawa (www.yokogawa.com)

In recent decades, there has been a great deal of interest in Coriolis mass flowmeters (CMFs). The market for CMFs grew dramatically in the late 1980s and the 1990s. Today, CMFs are widely accepted in many industrial fields, and their performance has improved steadily. One of the advantages of CMFs is that they measure the true mass flow directly, whereas other types measure only volumetric flow. The high accuracy and rangeability of CMFs is another reason for their fast growth and acceptance in industry. The commercially available units show a broad variety of designs, such as single-tube, dual-tube, bent-tube, and straight-tube. Since CMFs are available that incorporate different tube materials (e.g., stainless steel, Hastelloy®, titanium, zirconium, tantalum, and lined tubes), they can be used for all kinds of liquids or gases. CMFs are most common in the food and beverage, chemical and pharmaceutical, and, increasingly, oil and gas industries.

MEASURING PRINCIPLE AND THEORY

Principle

Coriolis mass flowmeters have the proven ability to record the total mass flow to better than 0.1% for water at moderate velocities. Each Coriolis instrument gets its own calibration factor that depends only on the geometrical data and material properties of the tube. Thus, the calibration factor is independent of fluid properties. The measuring principle of CMF is Coriolis force, which appears in rotating and oscillating (vibrating) systems. Such a vibrating system is shown in Figure 2.11a for a straight tube. The tube is excited by an external force $\vec{F}_E$. The excitation frequency is kept at the natural frequency of the tube, which minimizes the energy needed for vibration. The general expression for the Coriolis force is $\vec{F}_C = 2 \cdot m \cdot \vec{v} \times \vec{\omega}$, where $\vec{q} = m \cdot \vec{v}$ is mass flow and

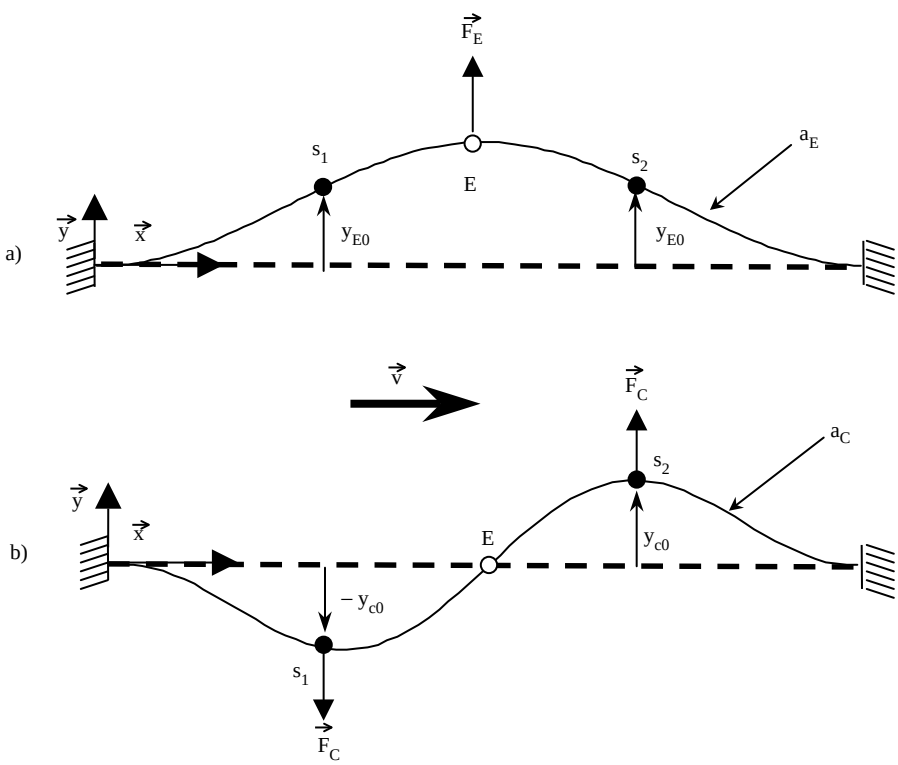

FIG. 2.11a
Panel a) describes the movement of a straight tube conveying a fluid, which is oscillating at the excitation frequency. The oscillation is maintained with the excitation force F_E at location E. The measuring signal is detected with the two sensors S_1 and S_2. When the fluid begins to flow, the Coriolis force F_C induces an oscillation as shown in panel b). The final lateral displacement is the superposition of both oscillations.

© 2003 by Béla Lipták

$\vec{\omega}$ is the rotation vector. When fluid is not flowing within a vibrating tube, the Coriolis force is zero ($\vec{F}_C = 0$). When fluid begins to flow, the Coriolis force is no longer zero ($\vec{F}_C \neq 0$), and the shape of the tube is illustrated by superimposing Figure 2.11a, panel (a) and panel (b). At the inlet section, the Coriolis force tends to decelerate the movement of the oscillating tube, whereas, for the outlet section, the Coriolis force tends to accelerate the movement. In the middle of the tube, the Coriolis force is always zero, since either $\vec{\omega}$ is zero for straight tubes or $\vec{q}$ is parallel with $\vec{\omega}$ for curved tubes, bringing the product $\vec{q} \times \vec{\omega}$ to zero. As soon as the fluid begins to flow, the Coriolis force induces a phase shift along the tube. This phase shift is proportional to the mass flow. The mass flow can then be determined by measuring the phase shift between two sensor positions, S_1 and S_2. Since the oscillation is kept at the natural frequency of the system, the frequency changes with changing density of the fluid in the tube; i.e., the natural frequency increases with decreasing density. Therefore, by knowing the actual frequency of the system, the density of the fluid can be calculated directly. Another direct measurement, in addition to mass flow and density, is the fluid temperature, which is measured by the CMF.

Theory

In the literature, there are different approaches to describe the dynamics of vibrating tube conveying a fluid or a gas (see, for example, Païdousses and Li[1] or Raszillier and Durst)[2]. The general problem is very complex, and an analytical solution can only be obtained for a simple system with an ideal tube conveying an incompressible and nonviscous fluid. For more complex systems, solutions can be found only through approximations or using finite element methods. In this section, we derive an analytical solution to determine mass flow in a simplified system. However, by solving this simple model, we gain insight into the major physical effects of CMF.

We consider a straight tube conveying a fluid. We first look at the first *eigenmode** of this system, which is shown in Figure 2.11a, panel (a). The tube is fixed at both ends, and the velocity $\vec{v}$ of the fluid shall be zero. The movement of the sensors S_1 and S_2 is described by the differential equation,

$$M_E \cdot \ddot{y}_E + K_E y_E = F_E \qquad \textbf{2.11(1)}$$

where

y_E = lateral excitation displacement at the sensor
F_E = excitation force
M_E = effective mass
K_E = the stiffness of the tube for the excitation mode
$\ddot{y} = \frac{d^2y}{dt^2}$

We are looking for solutions with $y_E(t) = \hat{y}_E \sin(\omega t)$ and $F_E(t) = \hat{F}_E \cdot \sin(\omega t)$. The eigenfrequencies of this system are found by setting the excitation force $F_E(t)$ to zero. Inserting the trial function for $y_E(t)$ in Equation 2.11(1), we get the frequency of the first eigenmode,

$$\omega_E = \omega_E(\rho_{\text{Fluid}}) = \sqrt{\frac{K_E}{M_E}} \qquad \textbf{2.11(2)}$$

Aside from the tube properties, ω_E depends only on fluid density. Therefore, using Equation 2.11(2), the fluid density can directly be determined by measuring the frequency of the eigenmode. Now, we include the excitation force $F_E(t)$ to determine the lateral displacement at the sensors. Solving Equation 2.11(1) with trial functions $y_E(t)$ and $F_E(t)$ and Equation 2.11(2), we get

$$\hat{y}_E = \frac{\hat{F}_E}{K_E \cdot \left(1 - \frac{\omega^2}{\omega_E^2}\right)} \qquad \textbf{2.11(3)}$$

For commercially available instruments the amplitude for $\hat{y}_E$ varies between 10 μm and 1 mm, and the frequency, $f_E = \omega_E/2\pi$, typically ranges from 80 Hz to 1100 Hz. Equation 2.11(3) also shows that the excitation force $\hat{F}_E$ is at a minimum when the driving frequency, ω, is similar to the frequency of the eigenmode, ω_E. In a real system, damping will prevent the lateral movement from becoming infinite even if ω equals ω_E. When the fluid begins to flow, the second mode is induced by the Coriolis force as shown in Figure 2.11a, panel (b). For the Coriolis mode, the differential equation is

$$M_C \cdot \ddot{y}_C + K_C y_C = F_C \qquad \textbf{2.11(4)}$$

where y_C is the lateral Coriolis displacement of the tube at S_1 and S_2, F_C is the Coriolis force, M_C is the effective mass, and K_C represents the stiffness of the tube for the Coriolis mode. The trial function for the lateral displacement of the Coriolis mode is $y_C(t) = \hat{y}_C \cdot \cos(\omega t)$, and the function for the Coriolis force is $F_C(t) = \hat{F}_C \cdot \cos(\omega t)$. Using the same procedure as above, we get the frequency of the Coriolis mode $\omega_C = \sqrt{K_C/M_C}$, which is typically 2.7 times higher than ω_E. The lateral displacement at the sensors becomes

$$\hat{y}_C = \frac{\hat{F}_C}{K_C \cdot \left(1 - \frac{\omega_E^2}{\omega_C^2}\right)} \qquad \textbf{2.11(5)}$$

The Coriolis force F_C is calculated by integration along the tube

$$F_C = \int_0^{L/2} \dot{m} \cdot \dot{y}_E \cdot a'_E(x) \cdot a_C(x) \cdot dx \qquad \textbf{2.11(6)}$$

$$F_C = \dot{m} \cdot C_{EC} \cdot \dot{y}_E$$

* Resonance frequency or the first resonance frequency.

© 2003 by Béla Lipták

where C_{EC} is a coupling factor between the excitation and the Coriolis mode, $\dot{m}$ is the mass flow, L is the length of the tube, $a'_E = (da_E)/(dx)$ is the derivative of the normalized excitation mode shape, $\dot{y}_E \cdot a'$ is the local rotation velocity, and a_C is the normalized Coriolis mode shape shown in Figure 2.11a, panel (b). If we define $v_E = \dot{y}_E$ and with $\hat{v}_E = \hat{y}_E \cdot \omega$, we get $\dot{y}_E = \hat{y}_E \cdot \omega \cdot \cos(\omega t) = \hat{v}_E \cdot \cos(\omega t)$. Thus, Equation 2.11(6) becomes $\hat{F}_C = \dot{m} \cdot C_{EC} \cdot \hat{v}_E$, and the lateral displacement of the sensors, Equation 2.11(5), becomes

$$\hat{y}_C = \frac{\dot{m} \cdot C_{EC} \cdot \hat{v}_E}{K_C \cdot \left(1 - \frac{\omega_E^2}{\omega_C^2}\right)} \qquad \textbf{2.11(7)}$$

As described before, the final lateral displacement of S_1 and S_2 is the superposition of excitation mode and Coriolis mode. As seen in Figure 2.11a, the total lateral displacement of S_1 is $y_{S1} = y_E - y_C$, and for S_2 it is $y_{S2} = y_E + y_C$. The time difference $\Delta\tau$ between the two sensors becomes

$$\Delta\tau = \frac{\Delta\varphi}{\omega_E} \approx \frac{2 \cdot \hat{y}_C}{\omega_E \cdot \hat{y}_E} = \frac{2 \cdot \hat{y}_C}{\hat{v}_E} = \frac{2}{\omega_E} \cdot \frac{\overline{(y_{S2} - y_{S1})}}{\overline{(y_{S2} + y_{S1})}} \qquad \textbf{2.11(8)}$$

where $\Delta\tau$ is the time lag and $\Delta\varphi$ is the phase shift between the two sensors. Now, we can determine the mass flow by inserting Equation 2.11(7) into 2.11(8), producing $\dot{m} = \frac{K_C \cdot (1 - \omega_E^2/\omega_C^2)}{2 \cdot C_{EC}} \cdot \Delta\tau$, where the expression $\frac{K_C \cdot (1 - \omega_E^2/\omega_C^2)}{2 \cdot C_{EC}}$ is a constant value C. Thus, by knowing $\Delta\tau$, the mass flow of a CMF can be determined through the simple equation

$$\dot{m} = C \cdot \Delta\tau \qquad \textbf{2.11(9)}$$

where the constant C does not depend on fluid properties. For commercially available CMFs, this constant is determined for each unit through calibration. Although we have derived the formula to determine the mass flow of this system, the model does not include effects such as axial pressure, inline pressure, temperature, pulsation, compressibility, and so on. As mentioned before, analytical calculations including such effects are very cumbersome and can be achieved only as approximations. The experimentally found influences of these effects on mass flow measurements will be described below.

DESIGN OF CMF

Figure 2.11b shows the tube assembly of a CMF. Generally, it consists of two components: the flow tube assembly and the electronics. Typically, two electrodynamic pickups generate electrical signals containing the flow information. The signal processing unit implemented in the electronics calculates the flow from these signals, which are very small in amplitude. The flow is split into two tubes as shown in Figure 2.11b. Sensors are mounted at the inlet and outlet section of the tubes, measuring the phase difference between these two points. The tubes are forced into oscillation by the driver, which is mounted between the two tubes. Thus, the tubes are automatically driven in counterphase, which is the preferred type of motion. To vibrate the flow tubes, all commercially available CMFs use a magnet and a coil as the driving mechanism. Typically, the coil is mounted on one tube, and the magnet is mounted on the opposite tube. To protect the measuring system from any external disturbances, the tubes are fixed into a rigid carrier housing, which is strong

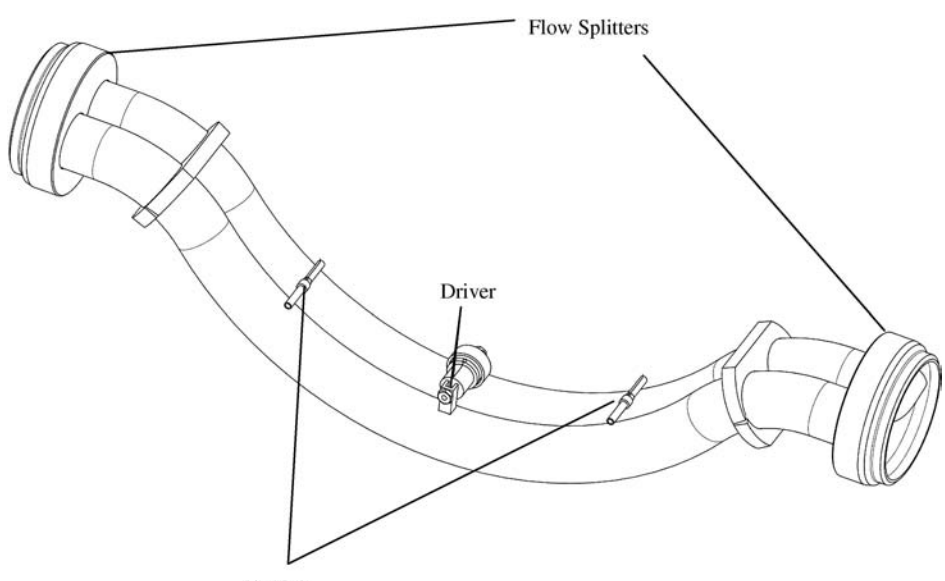

FIG. 2.11b
Tube assembly of a typical Coriolis flowmeter.

© 2003 by Béla Lipták

enough to isolate the system from the environment. This carrier housing is not shown in Figure 2.11b.

The tubes are vibrated at their natural frequency. As shown before, this frequency requires the least amount of energy to excite the system. Even large meters can be vibrated with only a few milliamps of excitation current. The natural frequency depends mainly on the mass of the system and the elastic properties of the measuring tubes. The total mass of the system includes the mass of the tube itself, the mass of the fluid within the tube, and the mass of any attached items such as driver and sensors. Therefore, since the material properties remain constant, a change in natural frequency directly indicates a change in the density of the fluid. As described before, this change in frequency can be used to determine the density of the fluid.

Balancing Systems for CMF

CMF are among the most accurate flowmeters on the market. This accuracy is achieved over a wide measuring range, which is required because, for example, liquids with high viscosities do not reach high velocities and have low total mass flow. A high turndown from maximum flow is also needed for gas flow measurements because, even at high pressure and at high velocity, the total mass flow rate for gas is small in comparison to mass flow rate of fluids. The accuracy for lower flow rates is limited by the zero-point errors. An error of 0.005% of full scale due to zero-point instability is typical.

In the previous section on "Theory," it is shown that mass flow induces very small displacements along the measuring tube. These displacements have to be measured accurately, even though the instruments are often mounted in a harsh process environment. A key parameter to achieve a precise and stable CMF reading is the decoupling of the internal measuring system from any environmental and external disturbances. If CMFs are not decoupled to near perfection, the oscillations from the measuring tube will be transmitted to the connected process piping, which in turn begins to vibrate as well. Vibrating process piping can then cause the CMF to be excited by undefined vibrations. Depending on the magnitude and the strength of such external excitations, this can lead to a disturbed reading of the CMF. Therefore, it is an important requirement of a CMF to be a balanced system, in which oscillations of the measuring tube are well defined within the meter and are not transmitted to flanges and process piping. This requirement is also a general rule to ensure a good zero-point stability.

Dual-Tube Meters

Designs with dual tubes offer the best performance for the decoupling of the measuring system from the process environment. Similar to a tuning fork, the two tubes vibrate in counterphase. While the oscillation is maintained, the forces at the fixation points of the two tubes are identical in absolute value but in counterphase directions. Ideally, this results in zero force acting on the flanges. The perfect symmetry of the two tubes is unaffected by changes in fluid density, temperature, pressure, viscosity, and so on.

The sensors shown in Figure 2.11b can be mounted between the two tubes and do not have to be supported by the housing. This results in maximum common-mode rejection and maximum suppression of externally induced vibrations. The mounting of the driver and sensors must be done in such a way that the overall mass balance of the tubes is maintained.

If the flow is not split completely symmetrically into the two measuring tubes, no additional error will occur, because the flow signal, which is due the Coriolis forces, is composed of the displacements of each tube separately and therefore is independent of the exact flow distribution. Thus, a well-defined flow profile is not a requirement for the design of a CMF. This also indicates that no special precautions are needed for installations near devices that may generate flow turbulences.

The majority of the commercially available CMFs use a double-tube design, because this offers the best performance with regard to accuracy and insensitivity to external disturbances. However, the dual-tube design requires flow splitters, which are not recommended for applications with fluids that are prone to plugging. Such fluids are often used in the food processing industry, where single-tube meters are required.

Single-Tube Meters

Generally, there are two different designs of single-tube flowmeters. In the first design, the tubes are bent to form a double loop. This design behaves similarly to the dual-tube flowmeter with the difference that the tubes are in series rather than parallel. Such single-tube flowmeters offer the same advantages as dual-tube meters, and they do not have the disadvantage of employing flow splitters. However, with this design, the tube length increases dramatically, which results in increased pressure loss. Furthermore, easy drainage of the instrument is impossible with this design. The second single-tube flowmeter design contains a straight, or fairly straight, single tube. From the customer's point of view, these designs are preferred, since they offer the best cleanability and the most prudent fluid handling. A challenge is to find a balancing mechanism for such flowmeters that allows accurate measurements for various process conditions and changing fluid densities. Nevertheless, straight (or fairly straight) single-tube CMFs are available that offer comparable performance to that of dual-tube flowmeters.

Tube Geometries

A variety of tube designs are currently available, a small selection of which is shown in Figure 2.11c. Most designs aim to magnify the effect of the Coriolis force by the geometrical form of the tubes. The larger the Coriolis effect

© 2003 by Béla Lipták

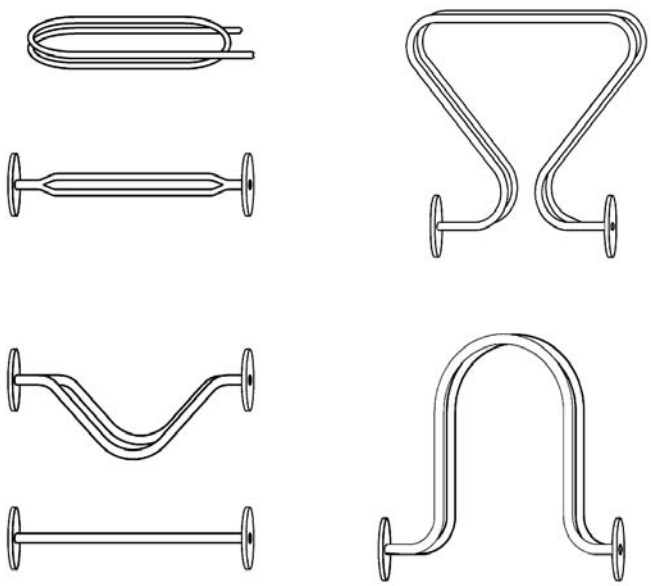

FIG. 2.11c
Selection of geometries of various Coriolis flowmeters.

becomes, the larger the time or phase difference between the flow sensors becomes, and the easier it is to determine the mass flow. Such magnifying geometrical forms often result in large tube loops that take up much space and have no advantage in zero-point stability, because external disturbances are also magnified. Thus, the signal-to-noise ratio remains the same. As electronics have become more and more efficient, the need for such geometrical magnification of the Coriolis effect has disappeared. Therefore, the large loops can be replaced by compact tube designs that require little space. An example of such a compact design is shown in Figure 2.11b. In addition, the compact design shortens the tube length, which results in higher oscillation frequencies of about 300 to 1100 Hz. Higher oscillation frequencies have the advantage of a better decoupling performance from pipeline vibrations and external disturbances, which are predominantly in the range of about 50 to 180 Hz.

For the dual-tube design, symmetry is the key factor, so a pair of tubes are chosen that are nearly identical in terms of mechanics. The two tubes have to be assembled in such a way that tube symmetry is not altered. Therefore, the production of these tube assemblies needs to be done very accurately, with a good understanding of the production process itself.

The main reason for using bent tubes is the thermal expansion of the measuring tube. While the fluid temperature may change by several hundred degrees Celsius, the temperature of the supporting structure changes much less, due to thermal transport, convection, and radiation. This can lead to large temperature differences between measuring tube and housing, which increase the axial forces of the tube. For a straight-tube CMF, the axial forces are largest and mainly depend on the expansion coefficient of the tube material. To prevent the tube from damage, the axial force must stay below a certain value, which depends on the material of the tube. By choosing a material with a low expansion coefficient, the axial forces can be kept below the critical value, even for straight tube CMF. Unfortunately, the rather high expansion coefficient of stainless steel, which is the most common material for measuring tubes, allows only a very restricted temperature range for a straight-tube design. Therefore, stainless steel tubes need to have a curved shape to reduce the maximum stress, since the tube can expand into the curve. All commercially available CMFs with straight tubes use titanium or zirconium for the measuring tubes, since these materials offer a small temperature expansion coefficient. With these materials, even great temperature differences between the measuring tube and the housing result in only small additional axial stress. Moreover, titanium offers higher stress limits than stainless steel. CMFs with single straight tubes are available for use up to 150°C.

With regard to corrosion, erosion, and pressure rating, the wall thickness of the measuring tubes should be as thick as possible. However, the sensitivity of the instrument to flow-induced Coriolis forces decreases with increasing wall thickness. Therefore, tube dimensions have to be optimized for several considerations, including the overall pressure loss. For a 1.5-in. (DN 40) dual-tube design, a typical size of the measuring tube is 1 in. (25 mm) inside diameter with a wall thickness of 1/16 in. (1.5 mm).

Flowmeters are commercially available with stainless steel, Hastelloy®, titanium, zirconium, and tantalum as tube material. Exotic materials such as glass or Tefzel®-lined tubes are also available for special purposes.

Sensors

As shown in Figure 2.11b, two motion sensors are needed to measure the displacement of the tube at the inlet and outlet sections. The phase difference or time lag between the two sensor signals is a measure of the mass flow. The sensor could be of any type that can represent the motion of the flow tubes, measuring position, velocity, or acceleration. At present, the most commonly used device is the electrodynamic sensor, in which a coil is mounted on one tube and a magnet on the other tube. The relative motion between the tubes induces a voltage in the coil, representing the differential velocity of the tubes. Electrodynamic sensors have the advantages of offering very good phase accuracy and high reliability.

Temperature Sensors

As described previously, mechanical properties change with temperature. This leads to axial stress and also changes the Young's modulus. An increase in temperature decreases the stiffness of the tube by lowering the Young's modulus. To compensate for the influence of thermal effects on CMF readings, each flowmeter needs to be equipped with at least one sensor to measure fluid temperature. Furthermore, because a temperature difference between the measuring tube and the

© 2003 by Béla Lipták

housing results in an axial force, a second temperature sensor is needed to adjust the reading of the flowmeter for this effect. Instead of a second temperature sensor, the axial stress can also be detected by a strain gauge attached to the measuring tube.

Temperature sensors have uses beyond merely accounting for thermal effects. Because they measure the temperature of the fluid, temperature information is used as the third direct process signal of a CMF, in addition to mass flow and density.

Security

The oscillation amplitude of a CMF is very small (typically, 100 μm). Stress in the measuring tubes is limited to ensure reliable operation of the meter for many years and to protect the meter from damage due to tube oscillation.

The whole vibration system, including driver and sensors, is fixed in a solid housing, typically constructed of stainless steel. This housing can act as a secondary containment. The more compact the CMF, the smaller the housing can be and, possibly, the higher the pressure rating of the secondary containment. Housings with pressure ratings up to 1500 psi (100 bar) are available.

Because they employ a small excitation current, intrinsically safe CMF versions are available for use in hazardous areas. The electronics must be tested for electromagnetic compatibility (EMC), fulfilling general EMC requirements according to applicable guidelines.

Electronics

The drive circuit initiated the tube oscillation and maintains the oscillation at a certain amplitude. This circuit needs to be built to provide a fast response to changing fluid properties. Air bubbles, for example, cause a sudden increase in excitation power. This information has to be supplied to the driver quickly so as to keep the amplitude of the oscillation constant. The driver circuit also controls the excitation frequency.

The sensor signals are very small sinusoidal signals, which have to be amplified to make them processible in the succeeding signal processing stages of the electronics. These amplifiers need to have a very broad bandwidth to prevent the mass flow signal from containing additional zero-point errors.

The electronics can be mounted on the flowmeter directly, forming one compact flowmeter unit, or the flowmeter can be interfaced to the electronic via a cable. This permits the electronics to be located remotely from the sensor. The remote assembly may be necessary for high-temperature meters, or it may be convenient if the sensor is installed in a place that is not easily accessible.

Signal Processing

The sinusoidal signals from the two sensors are compared to determine either the time difference or phase shift between the two signals. The mass flow rate is calculated directly by multiplying the time difference or the phase shift with the calibration constant of the flowmeter. Furthermore, thermal effects on the mass flow and density reading have to be included as well. This is commonly done with a microprocessor. However, analog circuitry can also be used. Today, much analog circuitry is being replaced by digital signal processors, which offer powerful mathematical functions to allow, for example, filtering of the flow signals. With digital processing, the response time of a CMF becomes faster, and the reproducibility of the flow reading improves. Thus, with digital signal processors, CMFs become capable of controlling formidable applications such as rapid batching, where fast response and high accuracy are critical.

Communication/Output

The primary output from a CMF is mass flow. However, most electronic designs are also capable of providing temperature, density, and volumetric flow data. Furthermore, totalizers provide mass or volume totals.

Most electronics are equipped with configurable alarm outputs. Sophisticated relay functions are available whereby the CMF directly controls a valve in a batching process.

Many digital output protocols are supported (e.g., Profibus, FOUNDATION™ fieldbus, HART, Modbus, scaled pulse, and others), allowing a choice of communication solutions. However, current (4- to 20-mA) and frequency outputs for mass flow are still the preferred and most common output signal formats.

TECHNICAL DATA

Measuring Accuracy/Range

Figure 2.11d shows the excellent measuring accuracy and the large rangeability of CMF. During the 12-h test run, the zero point and the calibration factor remain stable and are well within the specification of the instrument. Note that the reading remains accurate even at low flow rates, even below 1/100 of the maximum flow rate specified for the CMF.

Pressure Drop

The pressure drop depends on tube design and mainly depends on the length of the tube and its inner diameter. For the pressure drop of CMF with dual tubes, the design of the flow splitter is also important. The lowest pressure drop occurs with single straight-tube flowmeters, where the inner diameter of the measuring tube is identical to that of the connected process pipe. Typical pressure drops at the maximum flow speeds specified by manufacturers are 7 to 20 PSIG (0.5 to 1.5 bar) referred to water. For the measurements shown in Figure 2.11d, the pressure drop at 80 in./sec (2 m/s) is only 0.4 PSIG (30 mbar).

© 2003 by Béla Lipták

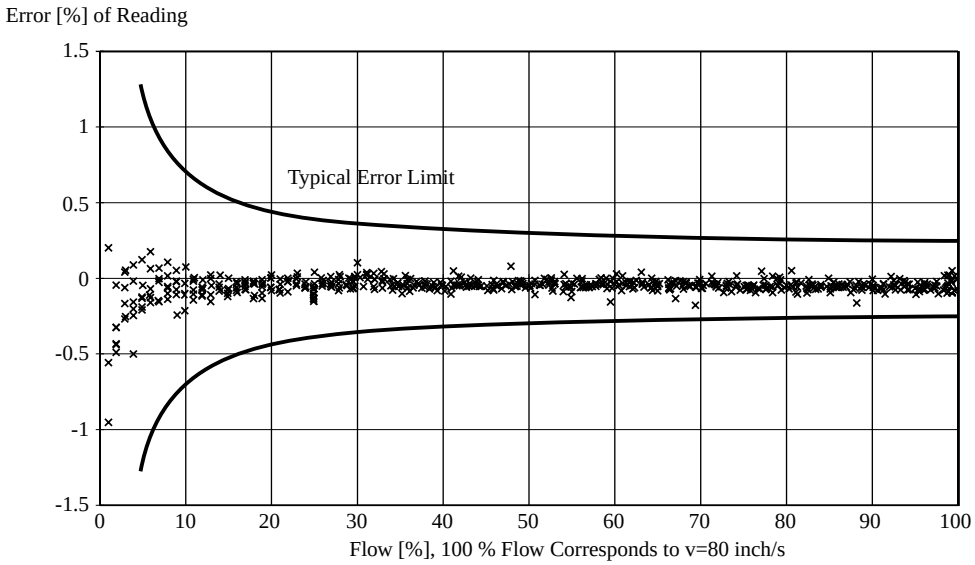

FIG. 2.11d
This figure shows the measuring uncertainty for a 1" (DN25) Coriolis flowmeter. The maximum flow speed is 80 in./s (2 m/s), which is 20% of the maximum specified flow speed of the flowmeter. The curves show the specified error limits.

Influences on the CMF Reading

While improving the accuracy of CMFs during the past decade, many effects, mostly secondary, can be identified that influence the performance of a CMF. These effects can be roughly separated into two groups.

1. Effects such as changing fluid temperature, for which CMF can directly account
2. Effects like external vibration, for which CMF cannot directly account

The latter effects are minimized by either the design layout or, if that is not possible, by special installation or correction instructions. In this section, we will briefly describe different effects.

Temperature As mentioned previously, changing fluid and housing temperatures will affect the elastic properties of the CMF and thus influence the mass flow and density readings. We can account for this effect directly by measuring the fluid and housing temperatures separately. On the other hand, temperature changes can also influence the zero offset and the performance of the electronic components to some degree. The drift in electronic components will usually lead to changes in the zero offset of the flowmeter. Both influences can be minimized by using a special design that does not require any further corrections or installation instructions.

In-Line Pressure With changing in-line pressure, the tube becomes slightly deformed, which influences the stiffness of the layout and thus can affect the reading of the CMF. With special designs, this effect can be minimized.

Mounting Pipe stress is introduced not only by in-line pressure and temperature, as described before, but also by different mounting conditions. These conditions may cause compression, tension, or shear forces to be applied to the flowmeter, which may affect the zero offset of the CMF. The influence of these effects has been greatly reduced during the last decade so that, today, a zero-point calibration is needed only for special applications as described below.

Vibration In most applications CMFs are exposed to some external vibrations. Such vibrations can occur as a result of the pumping system or nearby vibrating devices, or they may be flow induced as observed in pipeline systems. External vibrations typically occur at 50 to 180 Hz. As mentioned previously, CMFs are designed such that the effect of external influences is minimized. Therefore, external vibration plays a minor role and generally has no effect on the accuracy of the CMF reading. However, if the external vibration is close to the working frequency of the CMF, measurement errors will occur. It has been shown that pulsation is critical not only at the working frequency (f_E) of the CMF but also at frequencies $f = f_C - f_E$, where f_C is the Coriolis frequency.[3] Therefore, CMFs with high working frequencies are much less sensitive to pulsation and external vibrations than others. This is because both f_E and the difference $f_C - f_E$ are high; i.e., above roughly 200 Hz. For severely vibrating applications, where the low working frequency of the CMF might become critical, the influence of the external vibration can be greatly reduced by using flexible piping and vibration-isolating pipe supports.

Humidity Because CMFs are typically enclosed in sealed cases that are completely isolated from atmospheric conditions,

© 2003 by Béla Lipták

external humidity has only a minor influence. Also, the flowmeter electronics are commonly enclosed in a housing that provides protection against external humidity. However, in CMFs with inadequate case seals or damaged housings, extremely humid environments can create condensation on the flow detector coils, which may lead to corrosion and component failure.

Fluid Velocity It is well known that the velocity of the fluid can slightly influence the accuracy of the CMF reading.[1] This is a minor effect, which is below the specified accuracy of most CMFs and does not necessarily require any correction. Nevertheless, given that the velocity of the fluid is known, a CMF can directly account for this effect.

Gas Measurements Only in recent years has it been shown that the compressibility of gas can affect the accuracy of the CMF reading.[4] Although this effect can be neglected for most fluids, it becomes relevant for gases in which the speed of sound is diminished. Knowledge about this effect allows us to correct the reading of CMF.

Two-Component Flow A CMF may be suitable for homogeneous two-phase (solid/liquid) flows and for heterogeneous flows. Such applications include many food processes, sand in water, pulverized coal in nitrogen, water in oil, and many others. To measure two-phase fluids, single-tube meters may be preferable.

Corrosion, Erosion Corrosion and erosion diminish the wall thickness and therefore change the stiffness of the tube, which can lead to faulty CMF readings. Since CMFs are available with different tube materials, corrosion can significantly be reduced by choosing the appropriate material for each application. To reduce erosion caused by highly abrasive media, it is necessary to keep the flow velocity low. Erosion also depends on the design of CMF and is smallest in straight, single tubes.

Reynolds Number Although the accuracy of a CMF generally does not depend on the flow profile, the sensitivity changes slightly from laminar flow to eddy flow. Knowledge of the Reynolds number allows us to determine the state of the flow regime and thus to account for it directly.

Installation

Some general recommendations for installations are applicable to all CMFs. The measuring tubes should remain full of the process fluid. Mixtures of gas and liquid should be avoided. For gas measurements, the tubes should be filled with gas only, with no fluid droplets present.

The preferred installation orientation is vertical, with an upward flow direction. With this orientation, entrained solids can sink downward, and gases can escape upward, when the medium is not flowing. This also allows the measuring tubes to be completely drained and protects them from solid build up.

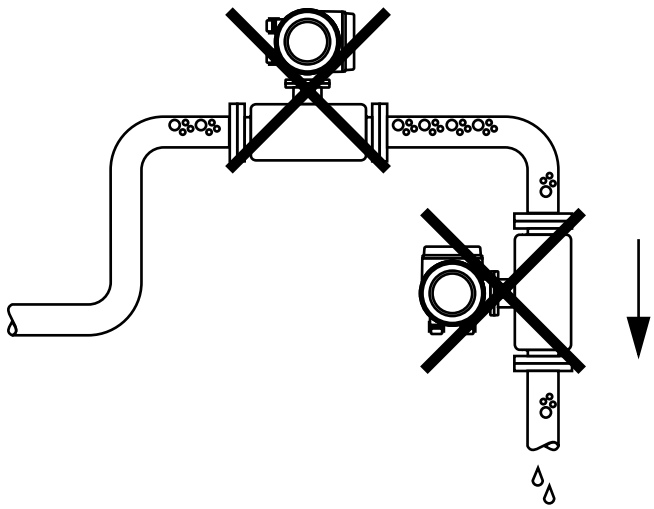

FIG. 2.11e
Not recommended mounting location of a CMF.

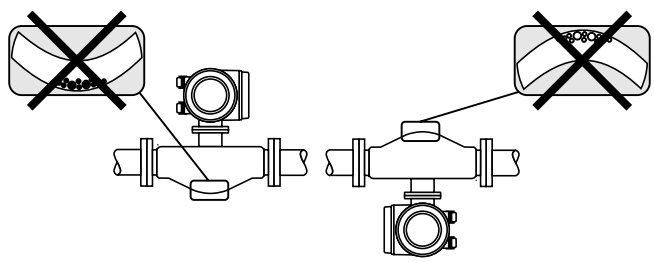

FIG. 2.11f
Orientation of CMF with curved tubes; the orientation shown in the left panel is not suitable for fluids with solids content; the orientation shown in the right panel is not suitable for outgassing fluids.

When measuring liquids, the CMF should not be installed at the highest point of the system, because gas may accumulate in the flowmeter as shown in Figure 2.11e. Installation in a vertical pipeline directly upstream of a free pipe outlet should also be avoided.

With curved tubes, the CMF orientation should be adapted to type of fluid used. Figure 2.11f illustrates problems with outgassing fluids and with fluids containing solid particles.

Mechanical Installation Modern CMFs offer good balance in the vibration system and therefore have no specific installation requirements. The CMF can be installed easily in a pipeline. When heavy CMFs are used, mechanical support of the pipeline has to be considered. Pipeline supports should not be attached directly to the sensor, and the CMF should not be used to support process piping directly.

© 2003 by Béla Lipták

TABLE 2.11g
Examples of Common Coriolis Flowmeter Applications

Food and Beverage	*Chemical and Petrochemical*		*Petroleum Products*
Beer, soda	Adhesives	Hydrogen peroxide	Asphalt
Chocolate	Alcohol	Latex	Bunker C
Fruit juice	Ammonia	Nitric acid	Crude oil
Honey	Catalysts	Phosgene	Diesel fuel
Ice cream	Caustic	Phosphoric acid	Fuel oil
Margarine	Cyclohexane	Polyol	Gasoline
Milk	Ethylene	Propylene	Hydraulic oil
Molasses	Formaldehyde	Resins	Jet fuel
Peanut butter	Freon®	Solvents	Kerosene
Pet food	Glycerine	Styrene	Lube oil blending
Tomato paste	Glycol	Sulfuric acid	Oil/water emulsion
Animal, vegetable fat	Hydrochloric acid	Toluene	Tar

Pharmaceutical	*Pulp and Paper*	*Other*
Alcohols	Antifoaming agents	Compressed gases: nitrogen, helium, carbon dioxide, CNG
IV bag filling	Black liquor	
Palm oil	Cellulose slurry	Dyes
Perfume	Paper pulp	Ink
Pill coatings	Red liquor	Liquefied gases: carbon dioxide, LPG, LNG
Soap	Titanium dioxide	Magnetic tape coating
Sodium methylate		Paint
Talcum powder		Photographic emulsion
Vitamins		Wax
		Filling airbags (automobile industry)

Zero-Point Adjustment (Static/Dynamic) After factory calibration of a CMF, the calibration factor and the zero point are stored in the electronics. CMFs that have good balance, and thus are decoupled from connected piping, are not affected by the installation into the process piping. As a result, the zero point will not change, and no special zero-point adjustment is necessary. Practical experience has shown that a zero-point calibration is required only in special cases; for example, to achieve the highest measuring accuracy possible in the presence of very slow flow rates or in the case of extreme process conditions such as very high fluid temperatures.

Zero-point calibration is carried out using completely filled measuring tubes with no mass flow. During the zero-point adjustment, care has to be taken that no gas or solids are present in the measuring tube. Keeping the in-line pressure high during the zero-point calibration reduces the risk of gas formation in the CMF and thus increases the accuracy of the zero-point calibration.



FIG. 2.11h
This picture illustrates a CMF installed into a compact space. The shown CMF is a single-tube Promass I. (Courtesy of Endress+Hauser Flowtec AG.)

APPLICATIONS

CMFs are currently used in many areas, including chemical, petroleum, petrochemical, pharmaceutical, food and beverage, and pulp and paper industries. Because of their versatility, CMFs are used for process control, batching, inventory, precision filling of containers, custody transfer, and other applications. An overview of some of them is presented in Table 2.11g. CMFs are suitable for many applications, because they can be very compact and do not have any upstream or downstream piping restrictions. An example of a compact application is shown in Figure 2.11h. The photo shows a

© 2003 by Béla Lipták

single-tube CMF Promass I from Endress+Hauser Flowtec AG. Note that inlet and outlet parts are bent at a 90° angle and that the available room is very limited.

ADVANTAGES OF CMFs

1. One of most important advantages of CMFs is that mass flow is measured directly. This can be performed with high accuracy, typically with 0.1% error. High accuracy is also maintained over wide ranges of temperatures (typically from −50 to +200°C) and in-line pressures. Furthermore, CMFs are extremely linear over their entire flow range.
2. CMF rangeability is extremely high. Measurements can still be performed at low flow rates, 100 times lower than the maximum flow rate specified.
3. In addition to direct measurement of mass flow, temperature and density are measured directly. Knowledge about density allows us to convert mass flow data into volume flow data.
4. The measuring principle is independent of the flow profile of the fluid or gas. Therefore, no flow conditioner or special upstream or downstream pieces are required. A CMF can also be used with a pulsating flow.
5. The accuracy of a CMF is independent of fluid properties such as viscosity or density. Therefore, a CMF can measure all kinds of fluids, including Newtonian and non-Newtonian fluids, slurries, and gases.
6. CMFs do not have any moving parts that wear out and require replacement. This reduces the need for and the cost of maintenance.
7. Single-tube CMFs do not have internal obstructions that could be damaged or plugged.
8. CMFs are designed to measure forward and reverse flows with high accuracy.
9. Because CMFs are available based on different construction materials, they can be used for many different applications, including corrosive fluids.
10. The design of CMFs allow them to operate with low power requirements.

LIMITATIONS OF CMFs

1. CMF prices are rather high as compared to other measuring device types. However, to measure mass flow with a volumetric meter, it is often necessary to install an in-line densitometer, which brings the cost up to roughly the equivalent of a CMF alone.
2. There are no CMFs available for medium temperatures above 800°F (426°C).
3. CMFs cannot be used for liquids with any significant gas content. This effect can be reduced by increasing the in-line pressure.
4. CMFs are not available for large pipelines; the largest CMF has a maximum flow rate of 63,000 lb/min (28,300 kg/min) using flanges with 10-in. (25-cm) diameters. To measure higher flow rates, two or more CMFs must be mounted in parallel.
5. CMFs are not suitable for gas applications with low in-line pressure, since low-pressure gases have low densities. To generate enough mass flow to provide a sufficient Coriolis signal, the velocity of the gas must be quite high. This may lead to a large pressure drop across the meter.

References

1. Païdoussis, M. P. and Li, G. X., Pipe conveying fluid: a model dynamic problem, *J. Fluids Struct.*, 7, 137–204, 1993.
2. Raszillier, H. and Durst, F., Coriolis effect in mass flow metering, *Arch. Appl. Mech.*, 61, 192–214, 1991.
3. Koudal, O. et al., High frequency Coriolis meter performance under pulsating flow, in *Proc. FLOMEKO 1998, 9th International Conference on Flow Measurement*, Lund, Sweden, 239–242, 1998.
4. Anklin, M. et al., Effect of finite medium speed of sound on Coriolis mass flowmeters, in *Proc. FLOMEKO 2000 10th International Conference on Flow Measurement*, Salvador, Brazil, 2000.

Bibliography

Adiletta, G. et al., Twin rigid straight pipe Coriolis mass flowmeter, *Measurement*, 11, 289–308, 1993.

Babb, M., New Coriolis meter cuts pressure drop in half, *Control Eng.*, October 1991.

Baker, R. C., *Flow Measurement Handbook*, Cambridge University Press, UK, 2000.

Baker, R. C., Coriolis flowmeters: industrial practice and published information, *Flow Meas. Instrum.*, 5(4), 229–246, 1994.

Birker, B., Theory, design and performance of the straight tube mass flowmeter, in *Mass Flow Measurements Direct and Indirect*, IBC Technical Services Ltd., London, 1989.

Blickley, G. J., Mass flow measurement aided by coriolis methods, *Control Eng.*, April 1991.

Blumenthal, I., Improving productivity through mass flow measurement and control, enhancing productivity, in *Proc. Pacific Cascade Instrumentation 1984 Exhibition and Symposium*, 163–168, 1984.

Bugher, G., Coriolis flowmeters, *Meas. Control*, September 1990.

Cascetta, F. et al., Experimental intercomparison of Coriolis mass flowmeters, *Trans. Inst. Meas. Control*, 14, 99–107, 1992.

Corser, G. A. and Hammond, G. C., A combined effects meter, *InTech*, April 1993.

Cheesewright, R., Clark, C. and Bisset, D., The identification of external factors which influence the calibration of Coriolis mass flowmeters, *Flow Meas. Instrum.*, 11, 1–10, 2000.

Cheesewright, R., Clark, C. and Bisset, D., The effect of flow pulsations on Coriolis mass flow meters, *J. Fluids Struct.*, 1025–1039, 1998.

Cox, B. M. and Gonzales, F. A., Coriolis mass flow rate, U.S. Patent, 4127028, 1978.

Drahm, W., New single straight tube Coriolis mass flowmeter without installation restrictions, in *Proc. FLOMEKO1998 9th International Conference on Flow Measurement*, Lund, Sweden, 243–248, 1998.

Durst, F. and Raszillier, H., Flow in a rotation straight pipe, with view on Coriolis mass flow meters, *J. Fluids Eng., Trans. ASME*, 112, 149–154, 1990.

© 2003 by Béla Lipták

Eide, J. M. and Gwaspari, S. C., Comparison Test and Calibration of Coriolis Meters, North Sea Flow Measurement Workshop, Peebles, Scotland, 1996.

Ginesi, D. and Annarummo, C., Application and installation guidelines for volumetric and mass flowmeters, *ISA Trans.*, 33(1), 61–72, 1994.

Grini, P. G., Maehlum, H. S. and Brendeng, E., In situ calibration of Coriolis flowmeters for high-pressure gas flow calibration, *J. Meas. Instrum.*, 5, 285–288, 1994.

Hemp, J., A theoretical investigation into the feasibility of Coriolis mass flowmeters for low density fluids, in *Proc. FLOMEKO 1996 8th International Conference on Flow Measurement*, Beijing, China, 265–270, 1996.

Hemp, J., The weight vector theory of Coriolis mass flowmeters, *Flow Meas. Instrum.*, 5(4), 247–253, 1994.

Henry, M., On-line compensation in a digital Coriolis mass flow meter, *Flow Meas. Instrum.*, 12, 147–161, 2001.

Kalotay, P., On-line viscosity measurement using Coriolis mass flowmeters, *Flow Meas. Instrum.*, 5, 303–308, 1994.

Keita, N. M., Behaviour of straight type Coriolis mass flowmeters in the metering of gas: theoretical predictions with experimental verifications, *Flow Meas. Instrum.*, 5, 289–294, 1994.

Kolahi, K., Gast, Th. and Rock, H., Coriolis mass flow measurements of gas under normal conditions, *Flow Meas. Instrum.*, 5, 275–283, 1994.

Medlock, R. and Furness, R. A., Mass flow measurement—a state of the art review, *Meas. Control*, 23, 100–112, 1990.

Menke, D., Use of Coriolis mass flowmeters in custody transfer, in *Proc. FLOMEKO 1996 8th International Conference on Flow Measurement*, Beijing, China, 232–237, 1996.

Nicholson, S., Coriolis mass flow measurement, in *Proc. FLOMEKO 1994 Conference on Flow Measurement in the Mid 90s*, NEL, Scotland, 1994.

Pawlas, G. and Patten, T., Gas measurement using Coriolis mass flowmeters, ISA Advances in Instrumentation and Control: International Conference and Exhibition, 50(3), 781–790, 1995.

Plache, K., Coriolis/gyroscopic flow meter, *Mech. Eng.*, 36, 1979.

Raszillier, H. and Durst, F., Coriolis effect in mass flow metering, *Arch. Appl. Mech.*, 61, 192–214, 1991.

Raszillier, H., Allenborn, N. and Durst, F., Effect of a concentrated mass on Coriolis flowmetering, *Arch. Appl. Mech.*, 64(6), 373–382, 1994.

Rezende, V. A. and Apple, C., Coriolis Meters for LGP Custody Transfer at Petrobras, North Sea Flow Measurement Workshop, Kristiansand, Norway, Paper 30, 1997.

Rieder, A. and Drahm, W., A new type of single straight tube Coriolis mass flowmeter, in *Proc. FLOMEKO 1996 8th International Conference on Flow Measurement*, Beijing, China, 250–254, 1996.

Robinson, C., Obstructionless flowmeters: smooth sailing for some, rough passage for others, *InTech*, 33(12), 33–36, 1986.

Schietinger, M., Mass flow vs. volumetric flow, *Meas. Control*, September 1990.

Sipin, A. J., Mass Flow Metering Means, U. S. Patent 3329019, July 4, 1967.

Smith, J. E., Method and Structure of Flow Measurement, U. S. Patent 4187721, Feb. 12, 1980.

Spitzer, D. W., *Flow Measurement, Practical Guides for Measurement and Control*, ISA, Research Triangle Park, NC, 1991.

Sultan, G., Single straight tube Coriolis mass flowmeter, *Flow Meas. Instrum.*, 3, 241–246, 1992.

Tokyokeiki, K. K., Straight tube type mass flowmeter, Patent Par. Applu. Disclosure 137 818/82, Tokyo, Japan, Aug. 25, 1982.

Vetter, G. and Notzon, S., Effect of pulsating flow on Coriolis mass flowmeters, *Flow Meas. Instrum.*, 5, 263–273, 1994.

Watt, R. M., Modelling of Coriolis mass flowmeters using ANSYS, in *Proc. ANSYS User Conference*, Pittsburgh, 1990.

Withers, V. R., Strang, W., and Allnutt, G., Practical Application of Coriolis Meters for Offshore Tanker Loading from the Harding Field, North Sea Flow Measurement Workshop, East Kilbride, NEL, Scotland, 1996.

Yamashita, Y., Development of Coriolis mass flowmeter with a single straight tube as flow tube, in *Proc. FLOMEKO 1996 8th International Conference on Flow Measurement*, Beijing, China, 265–270, 1996.

Young, A., Coriolis Flowmeters for Accurate Measurement of Liquid Properties, ISA Advances in Instrumentation and Control: International Conference and Exhibition, 45(4), 1891–1898, 1990.

© 2003 by Béla Lipták

2.12 Mass Flowmeters—Miscellaneous

R. SIEV (1969) **K. O. PLACHE** (1982) **B. G. LIPTÁK** (1995)
J. E. JAMISON (2003)

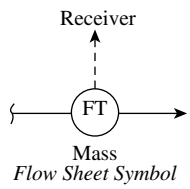

Types	A. Flow computers using inputs from volumetric flow sensors and densitometers, or pressure/temperature transmitters B. Doppler ultrasonic or magnetic flowmeter and radiation-type densitometer combinations C. Angular momentum and other similar principles D. Linear hydraulic Wheatstone-type
Applications	Gas, liquid, solids
Design Pressures and Temperatures	Magmeter/radiation units available up to 255 PSIG (17.5 bars) and 300°F (150°C)
Pipe Sizes Available	A. Unlimited B. 2 to 36 in. (50 mm to 0.9 m) C. Small diameters only—aero turbine fuel applications D. Under 1 in. (25 mm), for very low flows only
Errors (Inaccuracy)	Varies with the designs, generally approximately ±1% of full scale
Costs	A. Flow computers without the sensors can cost approximately $600 minimum; $700 to $4000 normally, depending on options, features, remote communications capabilities, and so on B. A 6-in. (150-mm) magmeter/radiation combination costs about $13,000 C. Costs vary substantially with size and materials of construction D. Price starts at about $2000 minimum; normally $7000 to $13,000, depending on model, options, and range required
Partial List of Suppliers	Barton Instrument Systems Ltd. (www.barton-canada.com) (A) Bristol Babcock (www.bristolbabcock.com) (A) Contrec Inc. (www.contrec.com.au) (A) ELDEC Corp., a Crane Company (www.eldec.com) (C) Kessler-Ellis Products (KEP) Co. (www.kep.com) (A) Omega Engineering Inc. (www.omega.com) (A) Pierburg Instruments Inc. (www.pierburginstruments.com) (D) Pierburg GMBH (www.pierburg-instruments.de) (D) Solartron Mobrey (www.solartronusa.com) (A) Thermo MeasureTech (www.thermomt.com) (B) Universal Flow Monitors Inc. (www.flowmeters.com) (A) West Coast Research Corp. (www.members.aol.com/wescores) (A) Yokogawa Corp. of America (www.yca.com) (A)

A knowledge of mass flow rates is necessary in combustion fuel control, reactor recipe formulations, and many other applications, including the mining and dredging, food, pulp and paper, pharmaceuticals, and chemical industries. The various weighing systems, solids flowmeters, and the more frequently used liquid/gas mass flowmeters (such as Coriolis and thermal types) are discussed in Sections 2.11 and 2.13. In this section, some of the other mass flow detection methods are covered.

© 2003 by Béla Lipták

RADIATION-TYPE MASS FLOWMETERS

One of the earliest methods of mass flow determination was to install two separate sensors—one to measure the volumetric flow and the other to detect the density of the flowing stream—and then to use the two transmitter signals as inputs into a mass flow computing module. This approach was feasible, but it required coordination between the products of different suppliers and corrections for such process variables as temperature, pressure, viscosity, particle size, and velocity profile changes. The introduction of density/mass flow systems has made it easier to use this technique. The key working component in these combinational designs is the multiple-input transmitter (Figure 2.12a), which, in addition to a radiation-type density input, accepts a flow measurement signal from any volumetric flowmeter. Based on these two inputs, the microprocessor-based transmitter generates an output signal that relates to mass flow.

A further improvement occurred in the design of these density/mass flow systems in which the density and volumetric flow sensors were combined in a single package (Figure 2.12b). These units are composed of a either a Doppler ultrasonic flowmeter or a magnetic flowmeter and a gamma-radiation-based densitometer, all in a single unit including a microcomputer. These mass flow units do not require compensation for changes in process variables and are installed as a single, obstructionless mass flow sensor. Its features and materials of construction are similar to those of a magnetic or ultrasonic flowmeter except that it is bulkier and more expensive because it incorporates a radiation-type densitometer. If the flow sensor is a magnetic flowmeter, the unit is also limited to use on process fluids having at least 3.0 μS/cm conductivity.

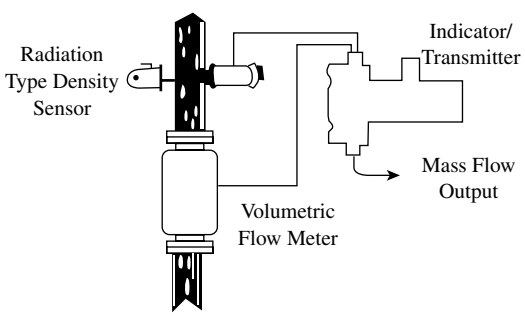

FIG. 2.12a
Combination mass flow system.

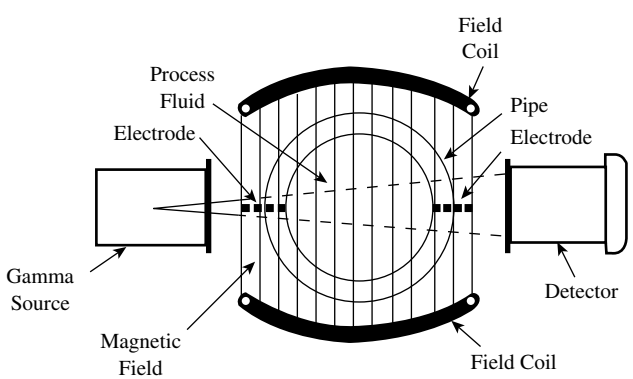

FIG. 2.12b
Mass flowmeter combining a magnetic flowmeter and a radiation-type densitometer in a single unit.

ANGULAR MOMENTUM-TYPE MASS FLOWMETERS

The principle of angular momentum can best be described by referring to Newton's second law of angular motion and the definition of angular momentum, using the following notation:

H = angular momentum (lbf-ft-sec)
I = moment of inertia (lbf-ft^2)
ω = angular velocity (rad/sec)
α = angular acceleration (rad/sec^2)
Y = torque (ft-lbf)
r = radius of gyration (ft)
m = mass (slugs)
t = time (sec)

Newton's second law of angular motion states that

$$Y = I\alpha \qquad \textbf{2.12(1)}$$

and defines that

$$H = I\omega \qquad \textbf{2.12(2)}$$

But because, by definition,

$$I = mr^2 \qquad \textbf{2.12(3)}$$

Equation 2.12(1) becomes

$$Y = mr^2\alpha \qquad \textbf{2.12(4)}$$

and Equation 2.12(2) becomes

$$H = mr^2\omega \qquad \textbf{2.12(5)}$$

Because

$$\alpha = \frac{\omega}{t} \qquad \textbf{2.12(6)}$$

Equation 2.12(4) becomes

$$Y = \frac{m}{t}r^2\omega \qquad \textbf{2.12(7)}$$

© 2003 by Béla Lipták

Solving for mass flow rate, $\frac{m}{t}$, (lbm/sec), we get

$$\frac{m}{t} = \frac{Y}{r^2\omega} \qquad \textbf{2.12(8)}$$

Also, dividing both sides of Equation 2.12(5) by t,

$$\frac{H}{t} = \frac{m}{t} r^2\omega \qquad \textbf{2.12(9)}$$

Because torque is expressed in terms of force, the right-hand side of Equation 2.12(8) must be multiplied by g (32.2 ft/sec^2 or 9.8 m/sec^2) to obtain a dimensionally correct equation. Therefore, since r^2 is a constant for any given system, the mass flow of fluid can be determined if an angular momentum is introduced into the fluid stream and measurements are made of the torque produced by this angular momentum and of the fluid's angular velocity.

Impeller-Turbine Flowmeter

The impeller-turbine-type mass flowmeter uses two rotating elements in the fluid stream, an impeller and a turbine (see Figure 2.12c). Both elements contain channels through which the fluid flows. The impeller is driven at a constant speed by a synchronous motor through a magnetic coupling and imparts an angular velocity to the fluid as it flows through the meter. The turbine located downstream of the impeller removes all angular momentum from the fluid and thus receives a torque proportional to the angular momentum. This turbine is restrained by a spring that deflects through an angle that is proportional to the torque exerted upon it by the fluid, thus giving a measure of mass flow.

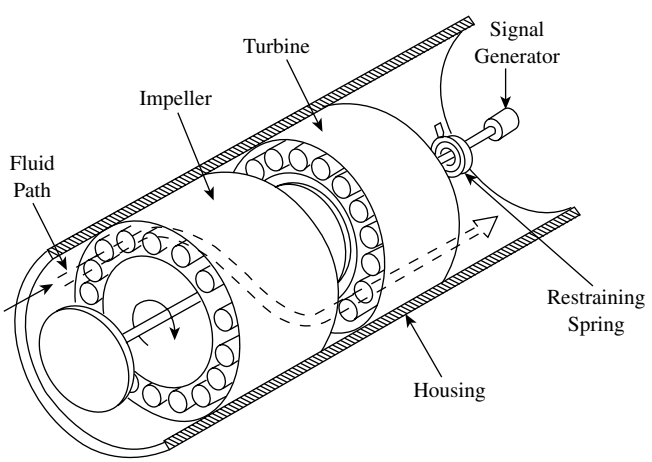

FIG. 2.12c
Impeller-turbine mass flowmeter. (Illustration reproduced by permission of the General Electric Co.)

Constant Torque-Hysteresis Clutch

Another angular-momentum type mass flowmeter eliminates the necessity of making a torque measurement after imparting a constant torque to the fluid stream. The relationship between mass flow and torque is

$$\frac{m}{t} = \frac{Y}{r^2\omega} \qquad \textbf{2.12(10)}$$

Therefore, if Y is held at a constant value, and since r^2 is a physical constant of any given system,

$$\frac{m}{t} = \frac{k}{\omega} \qquad \textbf{2.12(11)}$$

This relationship is used in designing a mass flowmeter as follows:

1. A synchronous motor is placed in the center of the flowmeter assembly.
2. This motor is magnetically coupled to an impeller that is located within the flowing process stream.
3. The magnetic coupling between the motor and the impeller is provided by means of a hysteresis clutch that transmits a constant torque from the motor to the impeller.

Thus, a measurement of the rotational speed of the impeller is inversely proportional to the mass flow rate.

Twin-Turbine Flowmeter

Another angular-momentum-type device is the twin-turbine mass flowmeter. New developments in this technology are also discussed in Section 2.25, which covers turbine flowmeters.

In this instrument, two turbines are mounted on a common shaft (see Figure 2.12d). They are connected with a calibrated torsion member. A reluctance-type pickup coil is

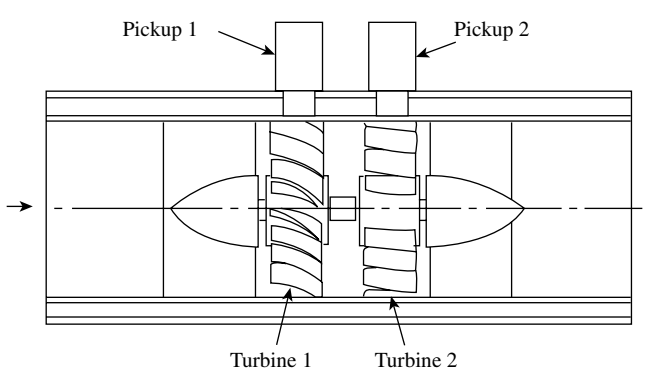

FIG. 2.12d
Twin-turbine mass flowmeter.

© 2003 by Béla Lipták

mounted over each turbine, and a strong magnet is located in each turbine within the twin-turbine assembly.

Each turbine is designed with a different blade angle; therefore, there is a tendency for the turbines to turn at different angular velocities. However, because the motion of the turbines is restricted by the coupling torsion member, the entire assembly rotates in unison at some average velocity, and an angular phase shift is developed between the two turbines. This angle is a direct function of the angular momentum of the fluid. As previously shown, angular momentum can be measured by torque, and angular momentum is a function of mass flow. In the twin-turbine assembly, the turbines are not restrained by a spring, but the torsion member that holds them together is twisted. This torsion member has a well established torsion-spring rate (ft-lbf/rad). Therefore, the angle developed between the two turbines is a direct function of the twist or torque exerted by the system.

This angle is measured by a unique method. As each turbine magnet passes its own pickup coil, the coil generates a pulse. The pulse from the upstream turbine is used to open a so-called electronic gate, while the pulse from the downstream turbine closes this gate. An oscillator is placed in the electronic circuit, and the oscillations are counted while the gate is opened. The number of oscillations is thus a function of the angle between the two turbines. Knowledge of the angle gives the value of torque, which, in turn, is proportional to mass flow rate.

Coriolis

Coriolis mass flowmeters are discussed in detail in Section 2.11 and are mentioned here only for the purpose of completeness. The classic Coriolis-type mass flowmeter (see Figure 2.12e) consists of a centrifugal-pump impeller wheel and a vaned sensing wheel that acts as a turbine wheel to extract the angular momentum imparted to the fluid by the impeller. The sensing (or turbine) wheel is contained in the same housing as the impeller and is attached to the latter by a strain gauge; the combination is driven at a known constant speed. The power applied to the impeller is merely that required to overcome the frictional drag of the system.

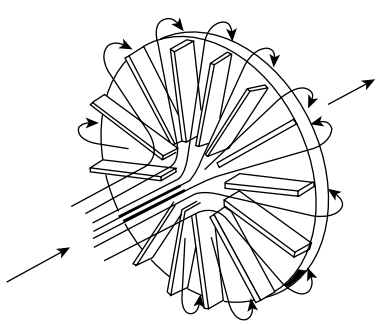

FIG. 2.12e
Classical Coriolis mass flowmeter.

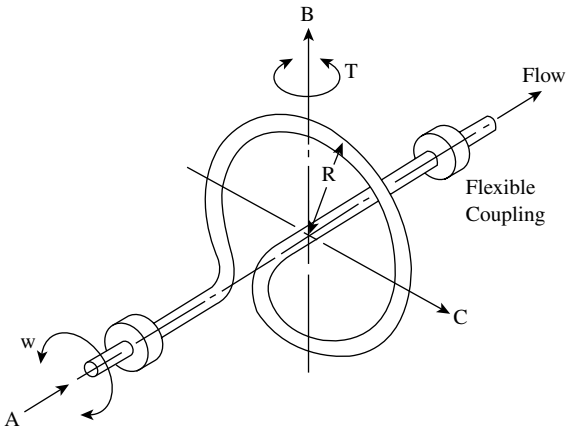

FIG. 2.12f
Gyroscopic mass flowmeter.

The torque measured is that required to impart to the fluid stream a Coriolis acceleration, given by the expression

$$Y = \omega\left(R_2^2 - R_1^2\right)\frac{m}{t} \qquad \textbf{2.12(12)}$$

where R_2 and R_1 = outer and inner radii (ft).

Comprehensive analysis and laboratory testing of this type of flowmeter are described in Reference 1.

Gyroscopic

Another angular momentum mass flowmeter (Figure 2.12f) operates on the principle of a gyroscope. It consists of a pipe shaped in the form of a circle or a square. A motor introduces an oscillating vibration at a constant angular velocity ω about the A axis. When the fluid passes through the loop, a precession-type moment is produced about the B axis and is measured by the deflection of a sensing element. This deflection can be shown to be directly proportional to mass flow.

The gyroscopic mass flowmeter can handle slurries in the medium pressure and temperature ranges, but its industrial use is very limited as a result of its high cost and inability to handle high flow rates. The gyroscopic and basic Coriolis flowmeters described earlier were generally not successful in the mass-flow-measurement market. A newer combination of the two principles has resulted in the highly successful Coriolis mass flowmeter described in the previous section.

LINEAR MASS FLOWMETERS

The linear mass flowmeter is, in principle, a hydraulic equivalent of the electrical Wheatstone bridge. Four matched orifices make up the bridge, and an integral constant flow recirculating pump establishes the internal reference flow. Sensing imbalance generated by external flow through the meter, the hydraulic bridge produces an output of differential pressure that is both linear and proportional to the true mass liquid flow.

© 2003 by Béla Lipták

This flowmeter has a wide rangeability and is unaffected by changes in process temperature, density, and viscosity. It is a fast-responding flowmeter that can detect very low flows at very low pressure drops. This meter is widely used in the automotive industry and wherever engines and fuel systems are checked, such as in the manufacturing of fuel injectors.

INDIRECT MASS FLOWMETERS

As is shown in Figure 2.12a, mass flow can also be obtained as the product of volumetric flow and density. In the case of measuring the mass flow of steam, one can also measure its volumetric flow and multiply it by density, which is obtained indirectly from the measurements of steam pressure and temperature. This technique is commonly used in the monitoring of steam distribution and determining steam losses caused by leakage, poor insulation, and so on.

Calculating the Mass Flow of Steam

Water at atmospheric pressure boils at 212°F. The boiling temperature of water is affected by pressure and, as the pressure drops, the boiling point decreases; as it rises, the boiling point increases. This pressure-temperature relationship is as follows:

Pressure	*Boiling Point, °F (°C)*
14.696 psia	212 (100)
50 psia	281 (138)
100 psia	328 (164)
200 psia	382 (194)
400 psia	445 (229)
800 psia	518 (270)

The boiling temperature of water at any given pressure is called the *saturation temperature,* and the steam produced at these temperatures is referred to as s*aturated steam*. If the steam temperature is increased over the saturation temperature, it is referred to as *superheated steam,* and the temperature difference between the saturation and the actual temperature is referred to as *degrees of superheat.* So, for example, if 100 psia steam is at 428°F, it has 100° of superheat.

Steam Density and Accounting

If the steam temperature and pressure are known, the internal energy, which is called *enthalpy*, is also known, as provided by the steam tables in the appendix of this handbook. From the steam tables, it is seen that the density of steam is also a function of only its temperature and pressure. Therefore, by measuring the temperature and pressure of steam, its density can be calculated, and if the volumetric flow of the steam is known, its mass flow can be calculated as the product of the two.

TABLE 2.12g
Plant Steam Balances

Boiler Output	*Volumetric Plant Consumption*	*Mass Plant Consumption*
20,000 lb/h (67,340 ft^3/h)	Weaving: 13,841 ft^3/h	4000 lb/h
	Spinning: 14,286 ft^3/h	4000 lb/h
	Finishing: 14,706 ft^3/h	4000 lb/h
	Services: 30,534 ft^3/h	8000 lb/h
Total: 20,000 lb/h (67,340 ft^3/h)	Total: 77,367 ft^3/h	Total: 20,000 lb/h

The energy content of steam is a function of its enthalpy. When steam is purchased for heating or to drive turbines, it is usually paid for on the basis of enthalpy. Therefore, by measuring the pressure, temperature, and volumetric flow of steam, one can calculate the mass flow or heat flow of steam.

The heat content of the steam drops, and some of the steam is also lost, as it travels from the boiler to the various users. This is the result of

- Insufficient thermal insulation of pipes
- Leaking joints on valves, pipes and other equipment
- Long line lengths

Example*

The steam distribution example given in Table 2.12g and Figure 2.12h is that of a textile factory. From Table 2.12g, one can observe that, when measured by volumetric flowmeters only (which disregard the effects of the drop in steam pressure as it travels through the distribution pipe lines), the total steam consumption appeared to be 9% greater than the volumetric flow of the steam as it left the boiler. On the other hand, if the measurements at the individual users are corrected for the drops in the pressure and temperatures at the users (and if no steam loss occurs due to leakage or condensation), this error can be eliminated through mass flow calculation.

Such calculations have the additional advantage of being able to provide the plant operator with information not only on mass flow but also on heat flow or total consumption of both mass and heat. In addition, such monitoring packages can keep records of pressure, temperature, specific volume, and enthalpy variations.

CONCLUSION

The most successful mass flowmeters have been described in the previous section (Section 2.11), but the devices covered in this section also have their applications. For example, the integrated ultrasonic or magnetic flowmeter/radiation densitometer package is the best solution for mass flow measurement of large slurry streams, in size ranges of 12 in.

* This is an example of an application of computer-type mass flowmeters, used with permission of Kessler-Ellis Products.

© 2003 by Béla Lipták

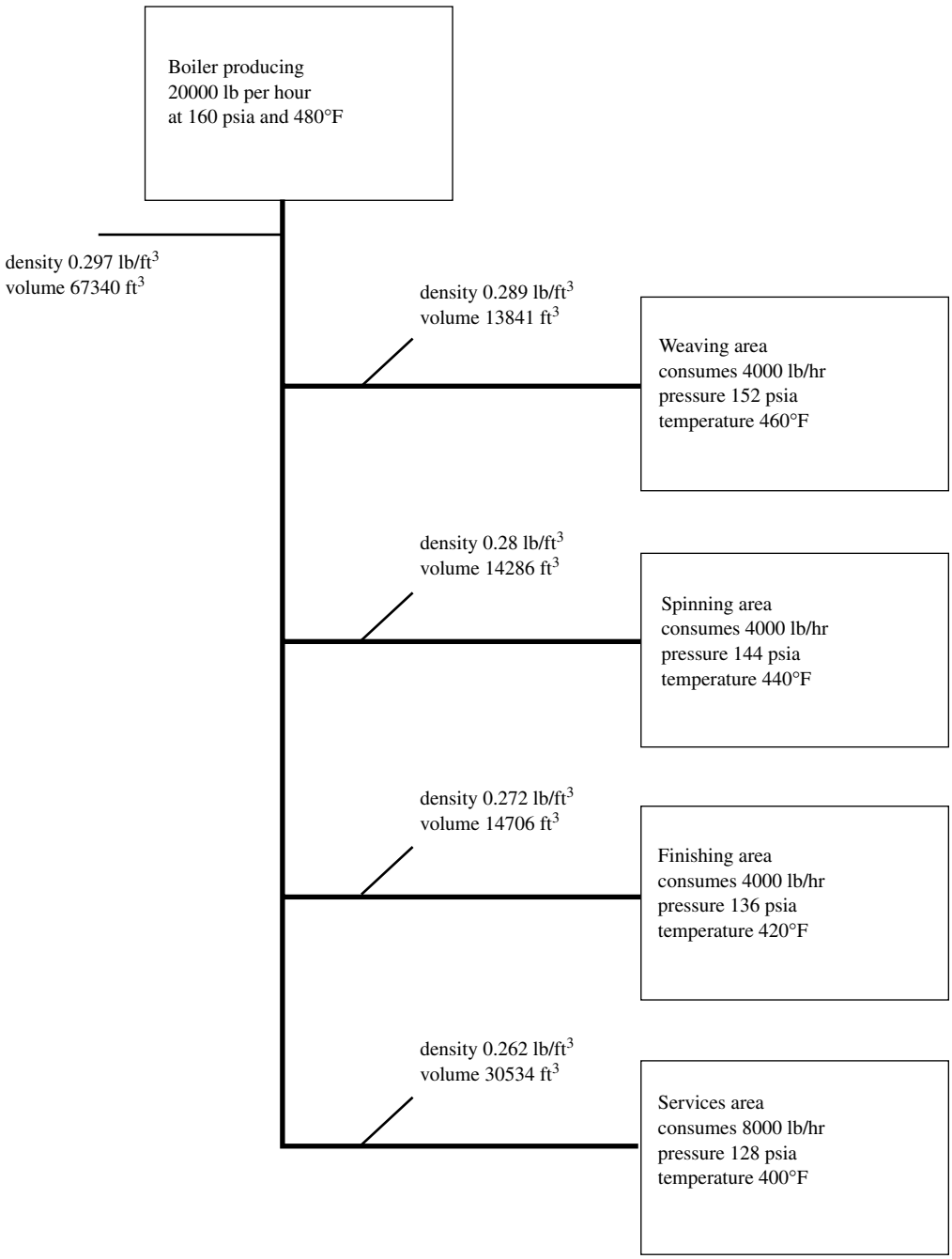

FIG. 2.12h
Plant steam balance example.

(300 mm) and above. Also, the flow computer approach sees many practical applications in many industries.

Accurate mass flow detection frequently can increase the efficiency of processes or allow for optimization, which results in energy or fuel conservation in combustion systems.

Reference

1. Plache, K. O., Coriolis/gyroscopic flow meter, *Mech. Eng.,* 36, 1979.

Bibliography

Albertz, T., *Mass Flow Measurements in Dust,* Krupp-Koppers, Essen, Germany, April 1980.

ASME Research Committee on Fluid Meters, *Fluid Meters, Their Theory and Application,* 5th ed., 1959.

Babb, M., New mass flowmeter design claims improved reliability, *Control Eng.,* May 1990.

Bugher, G., Coriolis flowmeters, *Meas. Control,* September 1990.

Close, D. L., Cryogenic Mass Flowmeter, ISA Symposium, Pittsburgh, PA, Paper No. 1–6–34, May 1971.

© 2003 by Béla Lipták

Eibl, C., Is mass flow measurement increasing too rapidly? *Meas. Control,* September 1990.
Flowmeter measures mass of fluid motion, *Chemical Processing,* November 1982.
Hall, J., Coriolis mass flowmeter reduces pressure loss, *Instrum. Control Syst.,* October 1989.
Harrie, P. M., Mass flow and density, *Meas. Control,* April 1991.
Hayward, A. J., Choose the flowmeter right for the job, *Process. J.,* 1980.
Laskaris, E. K., The measurement of flow, *Automation,* 1980.
Li, Y. T. and Lee, S. Y., Fast-response true-mass-rate flowmeter, *Trans. ASME,* 75, 835–841, 1953.
Lomas, D. J., Selecting the right flowmeter, *Instrum. Technol.,* 1977.
Mass flowmeters, *Meas. Control,* September 1991.
Miller, R. W., *Flow Measurement Engineering Handbook*, 3rd ed., McGraw-Hill, New York, 1996.
Schietinger, M., Mass flow vs. volumetric flow, *Meas. Control,* September 1990.
Sheriff, D., Mass flow control, *Meas. Control,* September 1990.
Snell, C. C., Relative Volume Fraction Measurement of Gas/Liquid or Solid/Liquid Flow with a Rotating Field Conductance Gauge, ISA Symposium, 1979.
Spitzer, D. W., *Industrial Flow Measurement*, 2nd ed., ISA, Research Triangle Park, NC, 1990.
Spitzer, D. W., What affects flowmeter performance, *InTech,* February 1993.
Waterbury, R., Vortex-mass meters tap information, *Control,* July 2000.
Watson, G. A., Flowmeter types and their usage, *Chartered Mech. Eng. J.,* 1978.
Zapolin, R.E., New Ways to Meet User Needs for SCADA Mass Flow Monitoring, 1990 ISA Conference, Paper #90–0633, New Orleans, 1990.

© 2003 by Béla Lipták

2.13 Mass Flowmeters—Thermal

R. SIEV (1969, 1982) **B. G. LIPTÁK** (1995) **T. J. BAAN** (2003)

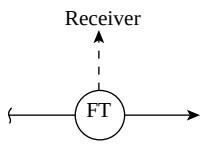

Flow Sheet Symbol

Types	A. Heat transfer-type mass flowmeters B. Thermal mass flowmeters employing externally heated capillary bypass sensor tubes and main conduits with laminar flow elements C. Heated-element-type mass flowmeters (note: Thermal flow switches are discussed in Section 2.7)
Check Cross Design Temperature	A. Up to 350°F (176°C), higher with special designs B. Some limited to 105°F (40°C) operation; others up to 300°F (150°C) C. Standard units up to 140°F (60°C), special ones up to 930°F (500°C)
Design Pressure	A. Up to 1200 PSIG (83 bars), higher with special designs B. Up to 1000 PSIG (69 bars) C. Low-pressure designs up to 15 PSIG (1 bar); others up to 1000 PSIG (69 bars) in smaller sizes
Pressure Drop	A. Usually, only a few inches of water B. Up to 45 PSIG (3 bars) C. Same as A
Process Fluids	A. Air, gas, liquids, and slurries B. Gases, some very low flow rate liquid devices C. Gases and liquids
Flow Range	A. From 0.5 sccm to 40,000 lbm/h (10,000 kg/h) B. Flow control units from 0 to 10 sccm to 0 to 35 scfm (0 to 1000 slm); special units up to 0 to 500 scfm (0 to 14 scmm) C. From 0 to 50 sccm to 0 to 2500 scfm (0 to 70 scmm)
Error (Inaccuracy)	±1% to ±2% of full scale, some better
Rangeability	10:1 to 100:1
Materials of Construction	Stainless steel, glass, Teflon™, Monel®, and so on
Cost	A type "B" thermal mass-flowmeter costs $500 and up, mass flow controller for low gas flows costs about $700 and up; purged probes for stack velocity measurement cost about $4500 each
Partial List of Suppliers	Aalborg Instruments & Controls Inc. (www.aalborg.com) (gas) Advance-Tech Controls Pvt. Ltd. (www.advancetechindia.com) (gas) Air Monitor Corp. (www.airmonitor.com) (air) Analyt-MTC GmbH (www.analyt-mtc.de) (gas) Brooks Instrument Div. of Emerson (www.emersonprocess.com) (gas, liquid) Cole-Parmer Instrument Co. (www.coleparmer.com) (gas, liquid) Eldridge Products Inc. (www.epiflow.com) (gas) E-T-A Control Instruments (www.etacbe.com) (flow switch) Extech Equipment Pty. Ltd. (www.extech.com.au) (gas) FCI Fluid Components, Inc. (www.fluidcomponents.com) (gas, liquid)

© 2003 by Béla Lipták

Flow and Level Controls (flow switch)
Hydril Co. (www.hydril.com) (flow switch)
Integrated Control Concepts Inc. (www.icci-inc.com) (gas)
Intek Inc., Rheotherm Div. (www.intekflow.com) (gas, liquid)
Kinetics/Unit Instruments (www.kineticsgroup.com) (gas)
Kurz Instruments Inc. (www.kurzinstruments.com) (gas)
Matheson Tri-Gas (www.matheson-trigas.com) (gas)
MKS Instruments Inc. (www.mksinst.com) (gas)
M-tek (www.vacuumresearch.com) (liquid)
Mykrolis Corporation (www.mykrolis.com) (gas)
Porter Instrument Co. (www.porterinstrument.com) (gas)
Scott Specialty Gases Inc. (www.scottgas.com) (gas)
Sierra Instruments Inc. (www.sierrainstruments.com) (gas)
Teledyne Hastings Instruments (www.hastings-inst.com) (gas)
Thermal Instrument Co. (www.thermalinstrument.com) (gas, liquid, slurry)
TSI Inc. (www.tsi.com) (gas, liquid)

Thermal flowmeters can be divided into the following two categories:

1. Flowmeters that measure the rise in temperature of the fluid after a known amount of heat has been added to it. They can be called *heat transfer flowmeters.*
2. Flowmeters that measure the effect of the flowing fluid on a hot body. These instruments are sometimes called *hot-wire probes* or *heated-thermopile flowmeters.*

Both types of flowmeters can be used to measure flow rates in terms of mass, which is a very desirable measurement, especially on gas service.

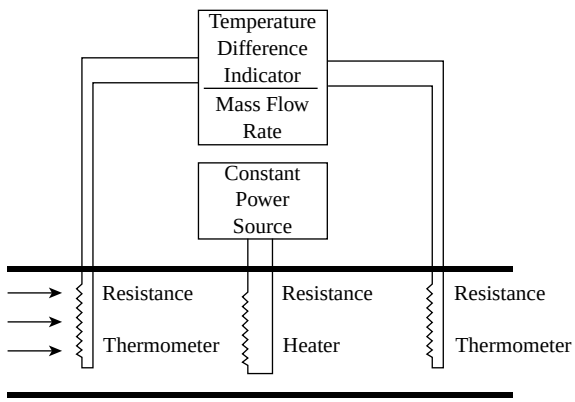

FIG. 2.13a
Heat transfer flowmeter.

HEAT TRANSFER FLOWMETERS

The operation of the heat transfer flowmeter is based on

$$Q = Wc_p(T_2 - T_1) \qquad \textbf{2.13(1)}$$

where

Q = heat transferred (BTU/h or Cal/h)
W = mass flow rate of fluid (lbm/h or kgm/h)
c_p = specific heat of fluid (BTU/lbm °F or cal/kgm °C)
T_1 = temperature of the fluid before heat is transferred to it (°F or °C)
T_2 = temperature of the fluid after heat has been transferred to it (°F or °C)

Solving for W, we get

$$W = \frac{Q}{C_p(T_2 - T_1)} \qquad \textbf{2.13(2)}$$

A simple flowmeter based on this equation is shown schematically in Figure 2.13a. Heat is added to the fluid stream with an electric immersion heater. The power to the heater equals the heat transferred to the fluid (Q) and is measured using a wattmeter. T_1 and T_2 are thermocouples or resistance thermometers. Since we know the fluid, we also know the value of its specific heat. Thus, by measuring Q, T_1, and T_2, the flow rate (W) can be calculated. T_1 and T_2 do not have to be separately detected; they can be connected to each other so that the temperature difference ($T_1 - T_2$) is measured directly.

A flowmeter of this type of construction has many limitations. The temperature sensors and the heater must protrude into the fluid stream. Thus, these components (particularly the heater) are easily damaged by corrosion and erosion. Furthermore, the integrity of the piping is sacrificed by the protrusions into the fluid stream, increasing the danger of leakage.

To overcome these problems, the heater and the upstream and downstream temperature sensors can be mounted outside of the piping (see Figure 2.13b). In this type of construction, the heat transfer mechanism becomes more complicated, and the relationship between mass flow and temperature difference becomes nonlinear. Figure 2.13c illustrates this nonlinear shift in ΔT in a heated-tube-type flowmeter, where the asymmetricity of the temperature distribution increases with flow.

To understand the operating principle of this flowmeter, we must review the effects of fluid mechanics and heat transfer. When a fluid flows in a pipe (turbulent or laminar), a thin

© 2003 by Béla Lipták

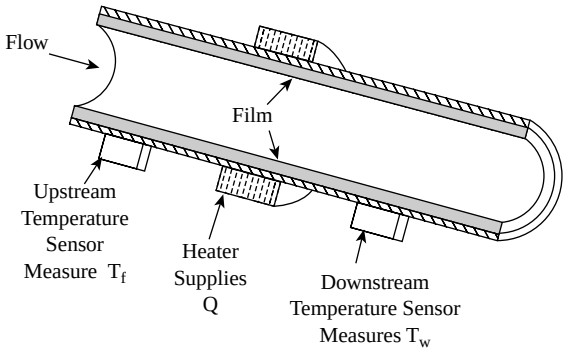

FIG. 2.13b
Thermal flowmeter with external elements and heater.

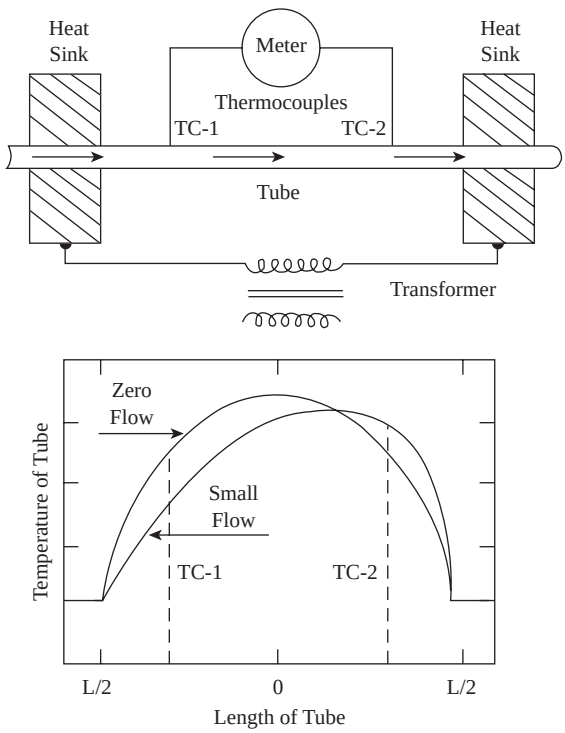

FIG. 2.13c
Heated-tube-type mass flowmeter.

layer (film) exists between the main body of the fluid and the pipe wall. When heat is passing through the pipe wall to the fluid, this layer resists the flow of heat. If the heater is sufficiently insulated, and if the piping material is a good heat conductor, the heat transfer from the heater to the fluid can be expressed as

$$Q = hA(T_{\text{wall}} - T_{\text{fluid}}) \qquad \textbf{2.13(3)}$$

where

h = film heat transfer coefficient [BTU/(hr × ft^2 × °F)]
A = area of pipe through which heat is passing (ft^2)
T_{wall} = temperature of wall (°F)
T_{fluid} = temperature of fluid (°F)

The film heat transfer coefficient, h, can be defined in terms of fluid properties and tube dimensions for both laminar and turbulent flow.[1]

$$h_{\text{turbulent}} = \frac{0.023K^{0.6}c_{\text{p}}^{0.4}W^{0.8}}{D^{1.8}\mu_1^{0.4}} \qquad \textbf{2.13(4)}$$

$$h_{\text{turbulent}} = \frac{1.75K^{0.67}c_p^{0.33}W^{0.33}}{DL^{0.33}} \qquad \textbf{2.13(5)}$$

where

K = thermal conductivity of the fluid [BTU/(hr × ft × °F)]
c_p = specific heat of the fluid [BTU/(lbm × °F)]
D = pipe diameter (ft)
L = heated length (ft)
μ_1 = absolute viscosity of the fluid (lbf/h-ft^2)
W = flow rate (lbm/h)

Using the turbulent flow condition as an example, and solving Equations 2.13(3) for h and 2.13(4) for W,

$$h = \frac{Q}{A(T_{\text{wall}} - T_{\text{fluid}})} \qquad \textbf{2.13(6)}$$

$$W^{0.8} = \frac{hD^{1.8}\mu_1^{0.4}}{0.023K^{0.6}c_p^{0.4}} \qquad \textbf{2.13(7)}$$

Substituting Equation 2.13(6) into 2.13(7),

$$W^{0.8} = \frac{QD^{1.8}\mu_1^{0.4}}{0.024K^{0.6}c_p^{0.4}A(T_{\text{wall}} - T_{\text{fluid}})} \qquad \textbf{2.13(8)}$$

Therefore, the mass flow (W) will vary with $T_{\text{wall}} - T_{\text{fluid}}$ if the fluid properties (μ, K, and c_p) and the meter design parameters (Q, D, and A) are all held constant. Letting all these constants = X,

$$W^{0.8} = \frac{X}{T_{\text{wall}} - T_{\text{fluid}}} \qquad \textbf{2.13(9)}$$

The downstream temperature sensor is located near the heater so that it measures T_{wall}. The upstream temperature sensor is located where the wall and fluid temperatures are in equilibrium. Thus, flow rate is obtained by measuring ΔT if the geometry of the flowmeter, the thermal conductivity, the thermal capacity and viscosity of the fluid, and the heater power are constant. This type of flowmeter can also be operated by keeping the ΔT constant and measuring the required power to the heater.

When building and/or using a flowmeter based on heat transfer principles, an instrument engineer must tread with caution. One must be sure that the values that have been

© 2003 by Béla Lipták

assumed to be constants are truly so. One must also understand that relationships such as those given in Equations 2.13(4) and 2.13(5) are limited to a range of Reynolds numbers, L/D ratios, and so on. Finally, it is highly recommended that this type of instrument be calibrated, either by the manufacturer or by the user, under conditions that as nearly as possible duplicate its actual application.

These types of flowmeters are best suited for the measurement of homogeneous gases and are not recommended for applications in which the process fluid composition or moisture content is variable. For these flowmeters to be useful in a system, both the thermal conductivity and the specific heat of the process fluid must be constant.

Bypass-Type Designs

To facilitate measurement and control of larger flow rates, heat transfer-type flowmeters with bypass designs have been introduced (Figure 2.13d). Bypass thermal mass flowmeters are comprised of a capillary sensor tube connected to the main flow conduit as a shunt line. Sensor tubes with wall thicknesses as low as 0.002 in. (0.051 mm), usually with inside diameters of under 0.125 in. (3 mm), are fitted with three precision windings externally. The one in the middle is used to transfer heat through the thin wall to the fluid stream inside; the other two are upstream and downstream of the heater, serving to monitor temperature differences. The temperature gradient is due to fluid flow carrying heat from upstream to downstream in the sensor tube.

Measurements are taken by Wheatstone bridge configurations. The main flow conduit includes a laminar flow element to ensure laminar flow and also to act as a restriction forcing a portion of the flow into the sensor tube. Two conduits, if connected in a bypass pattern maintaining laminar flow, will sustain a constant ratio of their flow rates. When zero-flow conditions exist, the temperature differential between upstream and downstream sections is zero. Under flow conditions, fluids carry heat from upstream toward downstream sections of the sensor tube, and the change in resistance is directly proportional to the temperature, and thus, to the mass molecular flow of the gas medium. As the flow through the sensor tube is a function of the temperature gradient, the mass flowmeter can be calibrated to express the total rate of flow in suitable engineering units.

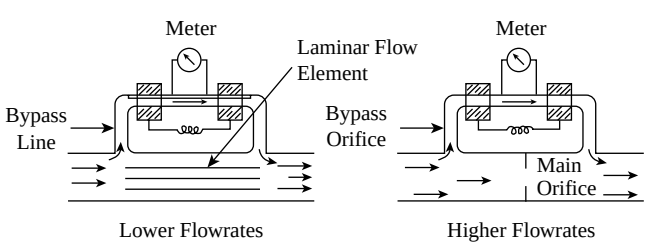

FIG. 2.13d
Bypass-type thermal mass flowmeters.

The smaller the diameter of the sensor tube, the faster the response, although, at the same time, the danger of impediment-related failure increases. There are two kinds of sensor tubes: straight and U-shaped. The advantage of U-shaped tubes is the more compact "footprint" of the mass flowmeter and controller, whereas straight tube designs facilitate stress-free conditions and the possibility of cleaning of the sensor tubes. Shunting sensor tubes ensure laminar flow over the full operating range of the meter. Additionally, small size is advantageous in minimizing the electric power requirement and also in increasing their speed of response, but it requires the use of upstream filters to protect against obstructions. Some units require up to 45 PSIG (3 bars) pressure drop to develop laminar flow conditions.

Traditional analog thermal mass flowmeters and controllers are increasingly being replaced by digital devices with advanced capabilities including user-accessible programming, totalizing, multiple primary calibrations, built-in correction factor libraries, RS-485 interface to permit up to 256 thermal mass flow devices to be controlled from a single PC, and other features. Communication protocols are available in HART, Profibus, and other configurations.

Mass flow controllers consist of flow measurement modules and automatic control valves assembled into compact closed-loop devices (Figure 2.13e). The cost of these units is very competitive. Therefore, if it is sufficient to control the flow of small gas streams to within ±1% of full scale, these units represent a good selection. Flow is most frequently controlled by variable-stroke electromagnetic valves. Thermal expansion valves are also available. Such valves are operated without seals and therefore without friction or wear.

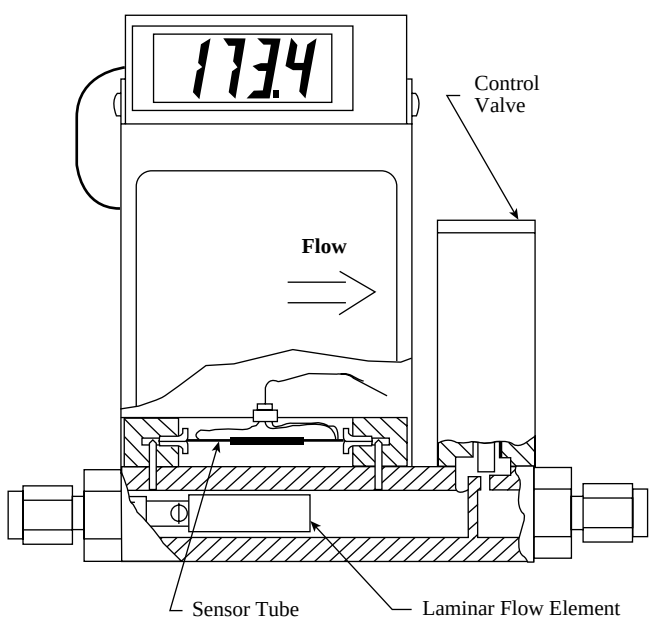

FIG. 2.13e
Bypass-type thermal mass flow controller with readout. (Courtesy AALBORG Instruments & Controls Inc.)

© 2003 by Béla Lipták

The stem of a thermal expansion valve is heated by the controller, and the expanding stem moves the valve plug into the seat, thereby closing the valve. Due to the type of valve actuator used, it takes 5 to 30 sec to bring the flow to setpoint. Mass flow controllers with flow capacities above 100 sL/min use linear step motor actuated mechanical valves. Proportionating electromagnetic valves have the fastest response, typically facilitating 800 ms time constants, or bringing setpoint-controlled flow rates to within ±2% of full-scale values over 20 to 100% of flow range within 2 sec. Linear step motor valves will typically reach set point values of ±2% of FS within 5 sec over the entire flow range of the meter.

Process applications should be evaluated from the point of view of fast time constants, which sometimes may be accompanied by undesirable overshoot and undershoot attributes vs. slower operations with "soft landings." This is a crucial factor in semiconductor manufacturing processes, where an overshoot condition may destroy a whole batch of expensive silicon wafers.

HOT-WIRE PROBES

In this design, two thermocouples (A and B) are connected in series to form a thermopile. A schematic of this type of flowmeter is shown in Figure 2.13f. This thermopile is heated by passing an alternating current through it. A third thermocouple (C) is placed in the direct current output circuit of the thermopile. Alternating current does not pass through this thermocouple, and it is therefore not electrically heated. This assembly is inserted into the process fluid (usually gas) stream. The gas cools the heated thermopile by convection. Because the AC input power to the thermopile is held constant, the thermopile will attain an equilibrium temperature and produce an emf that is a function of the gas temperature, velocity, density, specific heat, and thermal conductivity. The third, unheated thermocouple (C) generates an emf that is proportional to the gas temperature. This cancels the effect of the ambient gas temperature on the output signal of the heated thermopile. A and B are the heated thermocouples; C is the unheated one.

The output signal (voltage) of this instrument is given by the equation derived by King.[2]

$$e = \frac{C}{2(\pi K c_p \rho d v)^{1/2} + K} \qquad \textbf{2.13(10)}$$

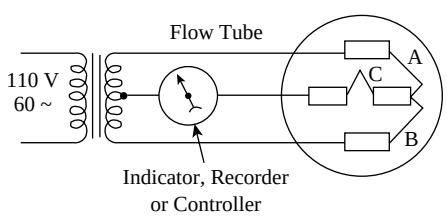

FIG. 2.13f
Hot wire flow-sensing probe.

where

e = voltage generated
C = instrument constant
K = thermal conductivity of fluid (BTU/h-ft-°F)
c_p = specific heat of fluid (BTU/lbm-°F)
d = diameter of heated thermocouple wire (ft)
v = velocity of fluid (ft/h)
ρ = density of the fluid (lbm/ft^3)

Once the instrument has been calibrated for a certain gas, a change in the gas temperature will have little effect on the gas properties and thus on the output signal. For example, the properties of air, over a wide range of temperatures, are as follows:

Temp. (°F)	*K* (BTU/h-ft-°F)	c_p (BTU/lbm°F)	ρ (lbm/ft^3)	$(Kc_p\rho)^{1/2}$
70	0.0150	0.243	0.0753	0.0165
500	0.0246	0.245	0.0416	0.0159
1000	0.0359	0.263	0.0274	0.0161

Because K (in the denominator) is very small, and because the term $(Kc_p\rho)^{1/2}$ remains constant over a wide range of temperatures, this type of instrument can be used to measure the mass flow rate of gases.

The hot-wire-type sensors are also used as air velocity sensors. These devices are called *anemometers*. A major limitation of the hot-wire-type mass flowmeters is similar to the limitations of all pitot-type flowmeters, namely that they do not detect the mass flow across the full cross section of the pipe—only at the sensor. Therefore, if the sensor is installed in a nonrepresentative location across the velocity profile, the resulting reading will be in error. The more recent developments in the design of this type of flowmeter include a more rugged mass flow sensor element, an integral (usually 10-diameter-long) pipe section to ensure smooth velocity profiles, and a conditioning nozzle that eliminates boundary layer effects and concentrates the flow onto the sensor (Figure 2.13g). These sensors can also be provided with

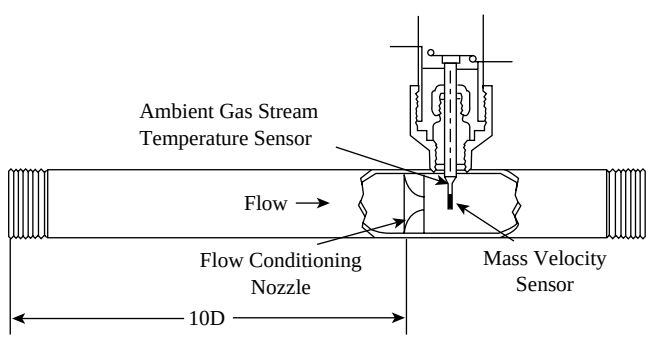

FIG. 2.13g
Complete mass flow sensor assembly. (Courtesy Kurz Instruments Inc.)

© 2003 by Béla Lipták

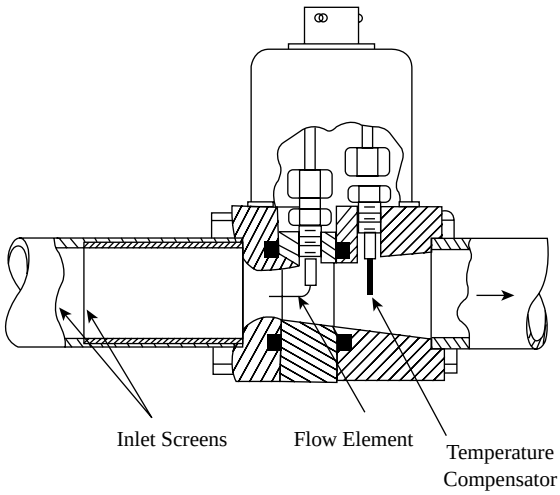

FIG. 2.13h
Venturi-type thermal mass flowmeter. (Courtesy TSI Inc.)

controllers and control valves to result in a complete flow control loop.

Other designs place the heated mass flow sensor at the throat of a venturi and add a screen upstream to make the flow profile more uniform (Figure 2.13h). These units are offered for both liquid and gas service. Other designs are of the insertion-probe type. Their flow ranges are a function only of the size of the pipe into which they are inserted, whereas their performance is similarly influenced by the correctness of the insertion depth (as are all pitot tubes).

CALIBRATING THERMAL MASS FLOW DEVICES

(See also Chapter 1, Section 1.4, "System Accuracy," and Section 1.8, "Instrument Calibration.")

Gas Flowmeter Calibrations

Gas calibrations are generally performed at standard conditions (STP) of $P = 101325$ Pa and $T = 20°$. Calibrating small gas flow rates of up to 20 slpm is most accurately accomplished using "mercury ring" piston prover calibrators. A calibrator of this type consists of a cylindrical glass tube, mounted vertically, and a plastic piston installed inside. The piston is free to move in the glass tube. There is a groove around the piston's circumference filled with mercury, sealing it in a virtually friction-free manner against the inside diameter of the glass tube.

Gas enters under the piston and is trapped by a valve, buoying the piston upward inside the tube. The edge of the piston registers a referenced zero and continues to travel up in the glass tube until it reaches the appropriate flow capacity. Timing the travel of the piston determines unit flow rates at each calibration point. The calibrator is corrected for temperature and pressure and compensated for the weight of the piston and friction in the line.

This method is demonstrated to offer a maximum uncertainty of ±0.25% of reading. Typically, National Institute of Standards and Technology (NIST) and equivalent international traceability standards require an uncertainty percentage ratio of 4 to 1; thus, an NIST traceable uncertainty of no better than ±1% may be claimed by a calibrating laboratory using such methods.

Calibrating larger flow rates of up to 5000 slpm (175 scfm) is facilitated by bell provers. The bell prover consists of a concentric inner and an outer cylindrical tank. The annular area between the concentric cylinders is filled with water or oil. An inverted bell is placed over the inner tank with its wall floating in the oil or water in the annular area between the two cylinders. During calibration at each reference point of the meter, gases are trapped under the bell. The rectilinear travel of the bell corresponds to sample volumes in timed intervals and is automatically recorded. Movement of the bell is usually detected by photoencoders or other sensing devices. Bells are precision balanced to maintain constant pressure and compensate for buoyancy throughout the collection stroke, and move freely, as gases are collected.

When more relaxed requirements of accuracy are acceptable, "transfer standards" will suffice. This means that a device, for example a mass flowmeter calibrated by a primary method, is used to calibrate flow instrumentation. As an example, a transfer standard calibrated for an uncertainty of ±1% may permit ±4% of traceable results.

Recalibration periods of mass flowmeters are based on industry standards. For example, in pharmaceutical processes, a period of six months is common. In industrial applications, depending on the industry, periods of six months to one year are recommended. When periodic recalibrations are performed, "as found" readings are recorded as well.

Liquid Calibrations

More recently, manufacturers developed bypass-type mass flowmeters and controllers for liquid microflow capacities. This requires calibration of microliter order of magnitude capacities of water. Ultra low liquid flow calibration is done by timed collection and weighing of water directly in a receptacle of a suitable pharmaceutical balance. Care should be taken to eliminate errors due to evaporation during sampling.

Small water flowmeters of up to 20 ml/min capacities are calibrated volumetrically. At steady state, flow water is delivered into an NIST-traceable, certified volumetric buret while timing appropriate volumetric segments. For meters with flow rates of a few liters per minute, an NIST-traceable, certified graduated cylinder is used.

Larger flow rates of liquids are calibrated at a steady-state flow of water by employing metering pumps into weighing tanks. Flows of up to 38 cmpm (10,000 gal/min) are accomplished through pipes with diameters of up to 16 in.

© 2003 by Béla Lipták

Collections of samples are timed, computing average flow through the meter, typically using ten or more points between 10 and 100% of capacity.

References

1. McAdams, W. H., *Heat Transmission*, 3rd ed., Equations 9–10a and 9–23, McGraw-Hill, New York, 1954.
2. King, L. V., On the convection of heat from small cylinders in a stream of fluid, *Philos. Trans. Royal Soc. of London*, Series A, 214, 373–432, 1914.

Bibliography

Baker, W. C., Flow without fouling, *Meas. Data*, November–December 1974.

Benson, J. M., Baker, W. C. and Easter, E., Thermal mass flowmeter, *Instrum. Control Syst.*, February 1970.

Cushing, M., The future of flow measurement, *Flow Control*, January 2000.

Gill, N., Mass appeal? *Flow Control*, September 1998.

Ginesi, D. and Annarummo, C., User tips for mass volume flowmeters, *InTech*, April 1994.

Hayward, A. J., Choose the flowmeter right for the job, *Process. J.*, 1980.

Kresch, S., Thermal dispersion gas mass flowmeters: a good choice for tough conditions, *Control Solutions*, November 1999.

Laskaris, E. K., The measurement of flow, *Automation*, 1980.

LeMay, D. B., A practical guide to gas flow control, *Instrum. Control Syst.*, September 1977.

Lomas, D. J., Selecting the right flowmeter, *Instrum. Technol.*, 1977.

Olin, J., Thermal mass flow meter for emission monitoring, in *Proc. ISA/93 Conference*, Chicago, IL, 1993.

Phillips, S. D. and Eberhardt, K. R., Guidelines for expressing the uncertainty of measurement results containing uncorrected bias, *J. Res. NIST.*, 102, 5, 1997.

Reason, J., Thermal dispersion elements measure flue-gas recirculation, *Power Mag.*, June 1987.

Thermal mass flowmeter excels at measuring low velocities, *Control*, February 1993.

Shannon, W., Thermal mass flow transmitters, *Flow Control*, July 1999.

Taylor, B. N. and Kuyatt, C. E., *Guidelines for Evaluating and Expressing the Uncertainty of NIST Measurement Results*, NIST Technical Note 1297, NIST, Gaithersburg, MD, 1994.

Watson, G. A., Flowmeter types and their usage, *Chartered Mech. Eng. J.*, 1978.

Welch, J. V., Trends in low gas flow metering, *InTech*, February 1991.

Yoder, J., Flowmeter shootout, part I: new technologies, *Control*, February 2001.

© 2003 by Béla Lipták

2.14 Metering Pumps

R. SIEV (1969, 1982) **B. G. LIPTÁK** (1995) **W. H. BOYES** (2003)

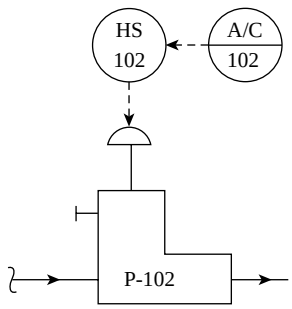

Proportioning Pump with Automatic and Manual Stroke Control
Flow Sheet Symbol

Types	A. Peristaltic (including progressive cavity) B. Piston or plunger types (provided with packing glands) C. Diaphragm or glandless types (mechanical, hydraulic, double-diaphragm, and pulsator designs)
Capacity	A. 0.0005 ccm to 20 GPM (90 l/min) B. 0.001 GPH to 280 GPM (0.005 lph to 1250 l/min) C. Mechanical diaphragms, from 0.01 to 50 GPH (0.05 to 3.7 l/min); mechanical bellows, from 0.01 to 250 GPH (0.05 to 18 l/min); others, from 0.01 to 800 GPH (0.05 lph to 60 l/min); pulsator pumps, from 30 to 1800 GPH (2 to 130 l/min); air-operated double diaphragm pumps, 0.0 to 275 GPM (1041 l/min)
Error (Inaccuracy)	A. ±0.1 to ±0.5% of full scale over a 10:1 range B. and C. ±0.25 to ±1% of full scale over a 10:1 range; can be as good as ±0.1% full scale at 100% stroke and tends to drop as stroke is reduced
Maximum Discharge Pressure:	A. 50 PSIG (3.5 bars) B. 50,000 PSIG (3450 bars) C. Mechanical bellows, up to 75 PSIG (5 bars); mechanical diaphragm, up to 300 PSIG (21.1 bars); hydraulic Teflon® diaphragm, 1500 PSIG (104 bars); pulsator pumps, up to 5000 PSIG (345 bars); hydraulic metallic diaphragms, up to 40,000 PSIG (2750 bars)
Maximum Operating Temperature	A. –70 to 600°F (–57 to 315°C) B. Jacketed designs, up to about 500°F (260°C) C. Units containing hydraulic fluids can handle from –95 to 360°F (–71 to 182°C), Teflon® and Viton® diaphragms are limited to 300°F (150°C), and neoprene and Buna N are limited to 200°F (92°C); the metal bellow and the remote head designs can operate from cryogenic to 1600°F (870°C)
Materials of Construction	A. Neoprene, Tygon, Viton®, silicone B. Cast iron, steel, stainless steel, Hastelloy® C, Alloy 20®, Carpenter 20, Monel®, nickel, titanium, glass, ceramics, PTFE, Teflon, PVC, Kel-F®, PVDF, PFA, Penton, polyethylene, and other plastics C. Polyethylene, Teflon, PVC, Kel-F®, Penton, steel, stainless steel, Carpenter 20, Monel®, Hastelloy® B & C
Cost	A. $200 to $800 B. $1000 to $6000 C. $1000 to $12,000, depending on type and service configuration
Partial List of Suppliers	Advantage Controls Inc. (C) (www.advantagecontrols.com) Alldos Inc. (www.alldos.com) (C) American LEWA Inc. (www.americanlewa.com) (A, B, C)

© 2003 by Béla Lipták

ARO Div. Ingersoll Rand (www.arozone.com) (C)
Barnant Co. (www.barnant.com) (A)
Blue-White Industries (www.bluwhite.com)
Bran & Luebbe Inc. (www.branluebbe.com)
Clark-Cooper Corp. (www.clarkcooper.com) (B, C)
Cole-Parmer Instrument Co. (www.coleparmer.com)
Crane Chem/Meter (www.chempump.com) (C)
Flo-Tron Inc. (B)
Fluid Metering Inc. (www.fluidmetering.com) (B)
Fluorocarbon Co. (www.fluorocarbon.co.uk)
Gerber Industries
Haskel International (www.haskel.com)
Hydroflow Corporation
Iwaki-Walchem (www.iwakiwalchem.com) (C)
Jaeco (www.jaeco.com)
Jesco America Inc. (www.jescoamerica.com) (C)
Linc Mfg. (B—pneumatic)
Milton Roy Flow Systems
  Liquid Metronics Inc. (www.lmipumps.com)
  Milton Roy (www.miltonroy.com) (B, C)
Neptune Chemical Pump Co. (www.neptune1.com) (B, C)
Plast-O-Matic Valves Inc. (www.plastomatic.com)
ProMinent Fluid Controls (www.prominent.cc) (C)
Pulsafeeder Inc. (www.pulsafeeder.com) (C)
Ruska Instrument Corp. (www.ruska.com)
Seepex (A) (www.seepex.com)
S J Control Inc. (www.sjcontrols.com)
Tuthill (www.tuthill.com) (B, C)
Valcor Scientific (www.valcor.com)
Wallace & Tiernan Inc. (B, C) (www.wallace-tiernan.com)

A metering pump is a positive-displacement pump providing a predictable and accurate rate of process fluid flow. Normally, the application design, specification, and use of pumps are the concern of mechanical engineers and machinery designers. Metering pumps, however, are sometimes used to actually measure or control flow rate, and in many cases they are the final control elements in an instrumentation loop. Therefore, the instrument engineer should be familiar with their operation and application.

Some controlled-volume pumps (as metering pumps are sometimes called) are designed to meet the needs of just one particular application, such as adding sodium hypochlorite to a swimming pool or providing chemical reagents to a chromatograph. Thus, each industry has its own particular types of metering pumps that could be classified by their applications. A better way of classifying metering pumps, however, is to distinguish them by their design. Any positive-displacement pump, due to its volumetric mode of fluid transfer, can be used as a metering pump. In practice, however, only those positive-displacement pumps that have no, or only very little, internal and/or external leakage can provide the precision and accuracy that are normally required of a metering pump.

The three basic metering pump designs are the peristaltic, piston, and diaphragm types. They are all positive-displacement devices used for the precise charging of corrosive, radioactive, toxic, flammable, or otherwise difficult fluids such as slurries, melts, liquefied gases, or liquid metals. They are used either in a controlled-volume metering mode or in a mixing-proportioning mode. The piston or plunger designs are provided with a packing gland, while the diaphragm or bellows designs are also referred to as glandless. The pulsator pump is a special variety of the glandless design. The actuators can adjust either the speed or the stroke, and the controls used for stroke adjustment include micrometers, positioners, and reversing motors with slide-wire feedback.

PERISTALTIC PUMPS

Peristaltic action is similar to the operation of the intestines and other hollow, muscular structures in which the successive contraction of the muscular fibers of their walls forces their content forward. In the peristaltic pump, the fluid is moved forward by progressively squeezing a flexible container from the entrance to discharge. This container is usually a tube that can be made out of any material that possesses sufficient resiliency to allow it to recover to its original shape immediately after compression. A variety of methods are employed for squeezing the tube (or container) to produce flow, including

1. Rollers that are connected to a rotating body squeeze the tubing against a circular housing (see Figure 2.14a)
2. Rollers that are driven by a chain drive squeeze tubes against a flat plate

© 2003 by Béla Lipták

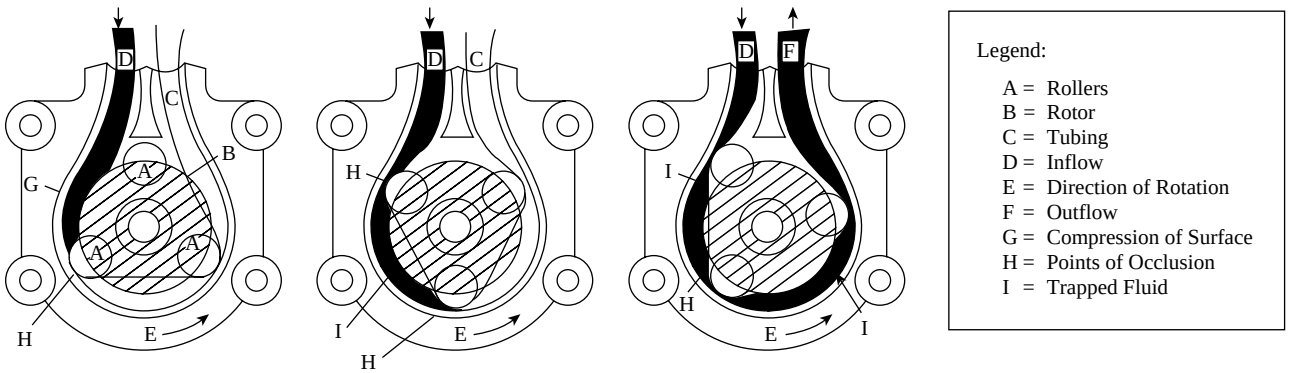

FIG. 2.14a
The three-roller design prevents backflow and eliminates the need for check valves. (Masterflex® is a registered trademark of Cole-Parmer Instrument Co.)

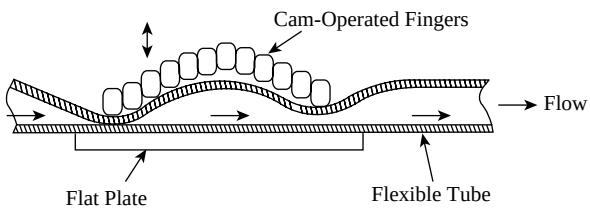

FIG. 2.14b
Peristaltic pump with cam-operated fingers.

3. Cam-operated fingers successively squeeze the tubing against a flat surface (see Figure 2.14b)
4. A rotating wobbling cam squeezes a tube against a flat plate

The plastic hose or tubing provides an external, tight, sanitary, and easily cleanable and replaceable container. It must be remembered that the tube is the only component of the pump that comes into contact with the fluid. A plastic material usually can be found that is suitable for even the most corrosive and abrasive application. However, the use of plastic tubing also places severe limits on the capability of the peristaltic pump. These pumps can furnish only low flow rates and low-pressure heads.

The peristaltic pump has found particularly large acceptance in medical and biochemical fields where high accuracy, low flow rates, inherent enclosure of the fluid, and sterilization are prime requirements. The flow rate of the peristaltic pump can be adjusted by changing the speed of the squeezing mechanism. Commonly, 50/60-Hz, 100/110-V electrical motors provide power to these pumps. Air-operated and electrical explosion-proof motors are also available.

Another peristaltic pump employs a plastic liner separating a rotating cam from the pumped fluid. This allows the use of a cam-type positive-displacement pump for metering service but prevents any external leakage. Higher pressures and flow rates can be obtained from this pump, but the advantages of the flexible tubing are lost.

Recently, some manufacturers of a specialized type of peristaltic pump, the progressive cavity pump, have been providing versions that are optimized for metering pump use. These pumps are useful in pumping highly viscous fluids such as adhesives, sludge, and slurries such as chocolate, tomato paste, and similar highly viscous liquids.

PISTON PUMPS

The piston pump employs a piston or plunger that moves with a reciprocating motion within a chamber. A fixed volume of liquid is delivered with each stroke. The flow rate is a function of piston diameter, chamber length, and piston speed. Check valves located at the pump inlets and outlets are required to prevent backflow. A schematic of a typical piston pump is shown in Figure 2.14c. The piston produces pressure in only one direction; therefore, the flow produced by plunger pumps (as piston pumps are sometimes called) is pulsating. If the

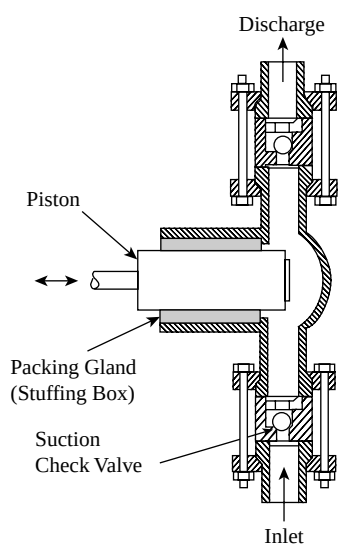

FIG. 2.14c
Piston pump schematic.

© 2003 by Béla Lipták

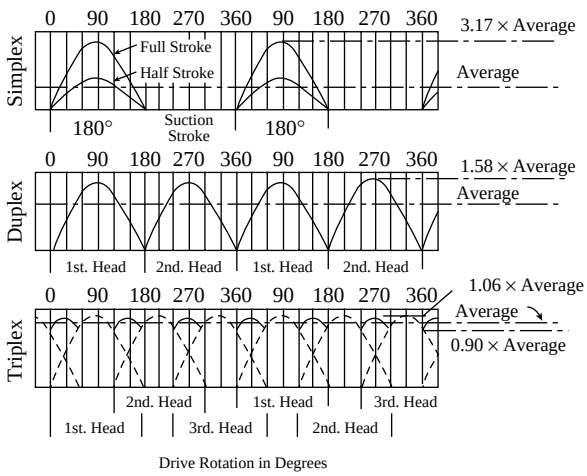

FIG. 2.14d
Multiple pistons tend to dampen pressure fluctuations.

pulsating flow characteristics are undesirable, a damping reservoir (accumulator) should be installed in the discharge line of the pump. Another method available to reduce pulsation is to use a pump that employs more than one chamber/piston combination in parallel. Pumps having as many as four chambers (cylinders) are commercially available. These multiple-piston pumps are called *duplex pumps* if they have two pistons, *triplex* if they have three, and so on (see Figure 2.14d).

The construction materials of a piston pump's components must be selected with care, because its housing, piston, piston packing, valve body, and valve seat all come into intimate contact with the process fluid.

The displacement of the pump is the area of the plunger multiplied by the stroke length. This is not the volume that is actually delivered, because some of the fluid slips back into the cylinder while the check valves are closing. Worn valves and fluid compressibility at high discharge pressures further reduce the volumetric efficiency (usually around 95%) of plunger pumps. Check valve leakage can be reduced by installing two check valves in series at both the pump suction and discharge. Volumetric efficiency should not be taken as metering accuracy, because leakage is repeatable and can be zeroed out by calibration. Therefore, in properly maintained and calibrated metering pumps, the measurement error will be much less than the leakage.

The plunger packing must be carefully selected not only to minimize leakage and wear but also for lubrication, cooling, sterilization, and flushing. This pump design can deliver both high flow rates and high discharge pressures. The smaller the plunger diameter, the greater the possible discharge pressure.

When metering abrasive slurries such as kaolin, diatomaceous earth, and metal-based catalysts, it is necessary to introduce a clean flushing fluid. This flushing fluid flows from the piston–cylinder cavity into the process fluid (Figure 2.14e), thereby keeping the piston and its packing clean during both the suction and discharge strokes. This flushing action prevents

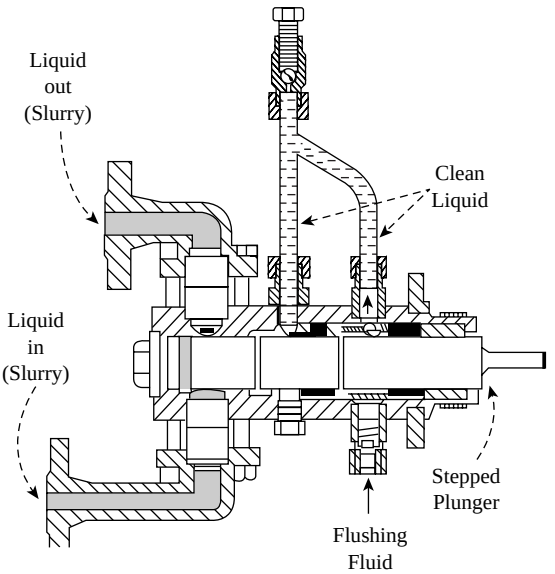

FIG. 2.14e
Flushing fluid keeps the packing free of solids on slurry services.[1]

the slurry from reaching the plunger packing. The metering action can still take place, because the mix proportion between the slurry and the flushing liquid is kept constant.

DIAPHRAGM PUMPS

The diaphragm or membrane pump uses a flexible member to transmit a pulsating force to the pumped fluid without allowing external leakage such as what might occur past the piston pump's packing. Like the piston pump, inlet and exit check valves are used to direct the flow. The diaphragm may be soft, made of Teflon®, neoprene, or a similar material, or it can be hard and made of metal. The diaphragm may be moved directly by a piston as in a reciprocating piston pump (see Figure 2.14f). This type, which may also employ a

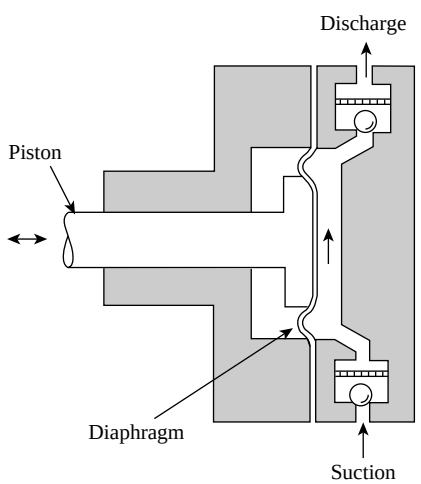

FIG. 2.14f
Direct-driven diaphragm pump.

© 2003 by Béla Lipták

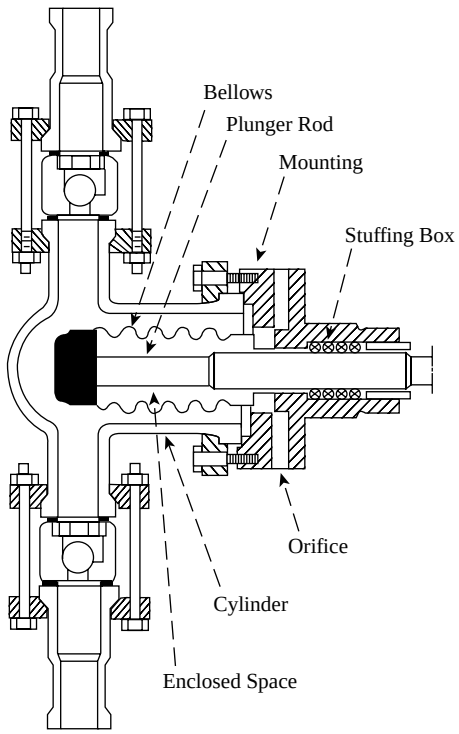

FIG. 2.14g
For extreme temperature applications the bellows-type, direct, mechanically actuated metering pump is a good choice.[1]

bellows instead of a diaphragm (Figure 2.14g), generally has a pressure limitation of about 125 PSIG (8.5 bars).

The glandless metering pumps can handle toxic, corrosive, radioactive, high-purity, odorous, volatile, and abrasive materials. The direct-actuated diaphragm designs are the least expensive and are suited for low-pressure, low-flow-rate services. The mechanically actuated bellows design can deliver more flow and is well suited for vacuum or extreme temperature services. For higher temperatures and corrosion resistance, metal bellows are used.

Hydraulic-Actuated Metering Pumps

In these designs, the forces delivered by hydraulic oil that is pumped by a reciprocating piston pump replace the direct mechanical forces on the diaphragm. The other side of the diaphragm is exposed to the process fluid (Figure 2.14h); therefore, the diaphragm is inherently balanced, being exposed to equal pressures on both of its sides. The support plates serve to keep the diaphragm deflections well within the endurance limits of the diaphragm material. This guarantees long useful life.

Metallic diaphragms can be damaged by dirt particles, and plastic diaphragms cannot handle high pressures and temperatures. Where a reliable seal is essential (for example, for pharmaceutical or liquid chlorine services), the double-diaphragm design is recommended (Figure 2.14i). In these designs, the diaphragm rupture can be visually observed if a sight glass is installed in the intermediate chamber, which is

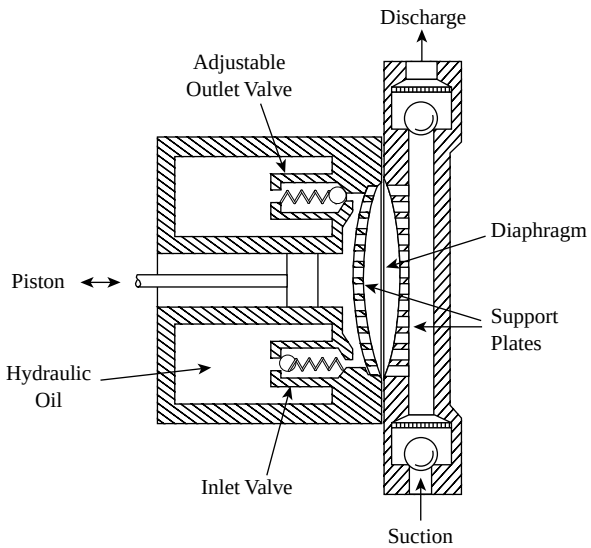

FIG. 2.14h
Oil-driven diaphragm pump.

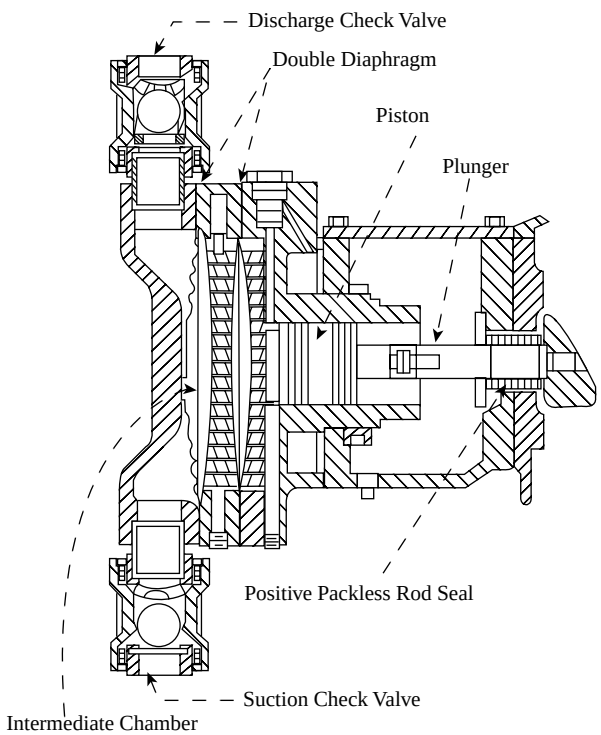

FIG. 2.14i
Double diaphragm design provides improved seal.

filled with a liquid of a preselected pH reference color. If the process-side diaphragm is damaged, the leakage of process fluid into the intermediate chamber changes the pH and thereby changes the color of the intermediate fluid. The materials exposed to the pumped fluid—diaphragm, housing, and valves—must be carefully selected for the application.

As with the piston pump, the flow is pulsating but may be smoothed by multiple diaphragms and/or by the use of a

© 2003 by Béla Lipták

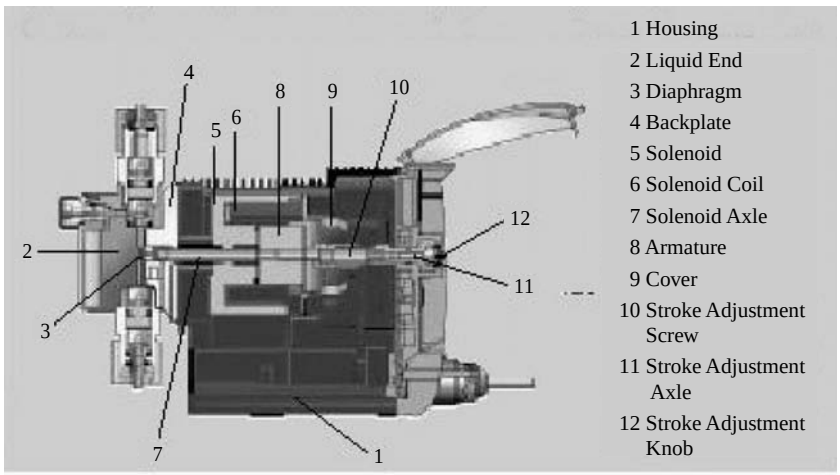

FIG. 2.14j
Solenoid-driven diaphragm pump is one of the most commonly used types for most metering pump applications. (Courtesy of Prominent Fluid Controls Co.)

damping reservoir. Check valve leakage provides the same problem for the diaphragm pump as it did for the piston pump.

The slave fluid's pulsation rate is varied by adjusting the piston pump's stroke length, altering the eccentricity of the crank or changing the duration of the stroke by diverting a portion of each stroke to idle motion by mechanical or hydraulic means. Because slave hydraulic fluid leakage does not affect the metered rate of flow, many variations of the standard reciprocating piston pump can be used.

When it is desired to keep the metering pump away from hot processes, a remote head design is frequently used in which the check valve assembly remains in the process pipe while the diaphragm and pump are located at some distance away. The connecting pipe is filled with a column of the process fluid, and a temperature gradient through this column of liquid isolates the diaphragm and its hydraulic fluid from the hot process.

Solenoid-Driven Metering Pumps

Since the early 1970s, by far the most common forms of metering pump have been the peristaltic and the solenoid-driven-diaphragm metering pumps. The diaphragm metering pump described previously is fitted with a shaft that extends behind the pump head to a mechanical stop, which is adjustable to control the stroke length (Figure 2.14j). This shaft passes through the coil of a solenoid. The solenoid is actuated based on either a timer or an external input, and each actuation of the solenoid produces one pulse of the diaphragm. These pumps are widely used in industrial water treatment, chemical feed systems, and municipal and utility water treatment. They can be either manual, with the stroke and stroke length controlled at the pump, or they can be proportioning, based on an input signal from a controller. They have the same mechanical constraints as hydraulically driven diaphragm metering pumps.

Pulsator-Head Pumps

These pumps can be valuable when very difficult fluids are being metered, such as boiling sulfuric acid, pyrophoric fluids, fluorinated hydrocarbons, and slurries suspended in Freon®. In this design, hydraulic oil is pumped through the hollow cavity of the pulsator support into two hermetically sealed diaphragms called *pulsators*. As the pulsator elements expand, they displace the process fluid from the pressure chamber. When the hydraulic oil is exhausted from the pulsator, fresh process fluid is drawn into the pressure chamber through the suction port (Figure 2.14k). Although the illustration shows only one pulsator, two normally are used to smooth out the flow. The alternate expansion and contraction of the pulsators causes the pumping action. The inner pulsator is usually Buna N, and the outer one is selected to match the fluid being pumped.

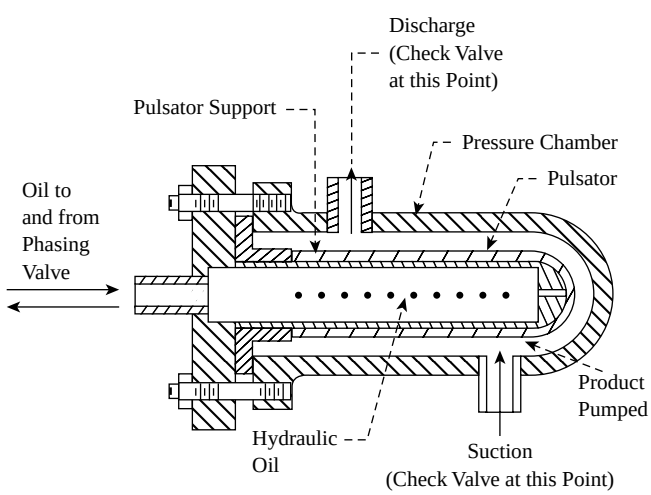

FIG. 2.14k
The pulsator-type metering pump.[1]

© 2003 by Béla Lipták

The pulsator pump produces a substantially pulsation-free, infinitely adjustable flow rate, which is set by the variable-volume oil pump. In hazardous areas, the hydraulic fluid can be pumped from a remote location, thereby removing all electrical components from the process area. The pump can be easily sterilized, because only the outside of the pulsator is exposed to contamination. Consequently, the pump can be cleaned by removing just the pressure chamber.

PROPORTIONING PUMPS

Proportioning pumps are used when several process streams need to be mixed in some preset proportion. These can be continuous mixing processes or batch processes in which the ingredients are simultaneously fed. In digital batch blending, it is the cycle time and the pump size that set the number of pump strokes or pulses per batch. For example, if the cycle time is 30 min and the amount to be charged is 60 gal, a pump capacity of 2 GPM is required. If this pump operates at a speed of 60 strokes per minute, then 1800 strokes or pulses would represent the 60 gal of batch charge. The pump pulse transmitter transmits the pulses and, when the 1800 count is reached, the batch controller stops the pump.

The proportioning of several process streams can be achieved in many different ways, depending on the hardware used. One possible solution is to operate several metering pumps in parallel. When using piston or diaphragm pumps, it is also possible to place multiple heads on the same drives, which will also achieve the same proportioning goal. On idle motion pumps, the proportioning adjustments can be achieved by varying the stroke duration.

The peristaltic pumps are natural proportioning devices. One can lay as many as 23 tubes of various sizes on a flat plate, and the finger or chain-driven rollers of the peristaltic pump will squeeze all tubes simultaneously and at the same speed. In this configuration, the tube sizes set the ratios between flows, whereas the total pumping rate for the mix is set by the motor speed.

All proportioning and digital batch-blending controls use modern, computer-compatible, microprocessor-based controls.

CONTROLLERS

Pulse-Input Type

Most modern metering pumps have on-board controllers that accept pulses generated by external controllers or sensors. These inputs are usually either a two-wire switch closure (such as a reed switch or SPST relay) or a powered, three-wire switch closure for a transistor switch input such as a Hall effect sensor or a Wiegand sensor. Many pumps can take the pulse input directly from a flow sensor, such as a paddle wheel or a pulse-contact head water meter, and scale it internally and use the raw sensor signal to proportionally control the stroke rate of the pump. A manual stroke length adjustment in the most commonly used solenoid-driven diaphragm metering pumps still performs dosage control in most cases.

Analog-Input Type

Some modern metering pumps are equipped with on-board signal conditioners to accept an incoming analog signal (4- to 20-mA DC, 1 to 5 VDC, and others) and convert that signal to an internal scaled pulse to operate the metering pump.

Start/Stop Type

In some industries, particularly industrial water treatment and boiler control, manual start/stop metering pumps are regularly used. External controllers are usually supplied that turn AC power to these pumps on and off for varying lengths of time, depending on an external signal from either a flow sensor or a pH, conductivity, or oxidation-reduction-potential (ORP) controller. The pump then becomes a proportioning feeder.

CONCLUSION

Each metering pump discussed has its particular application. Piston pumps are used to deliver high pressures. They require check valves and produce pulsating flows that can be damped. Diaphragm pumps are utilized in the medium-pressure range. The membrane serves as a moving partition between the mechanical or hydraulic drive and the process fluid. Rotary and pulsator pumps furnish pulsation-free high flow rates and are suitable for high-viscosity service. The accuracy of rotary pumps is a function of the clearances between the rubbing surfaces. This generally results in low precision, so rotary pumps are not considered to be metering devices. Peristaltic pumps are very accurate; they can handle extremely small flows, are self-priming, and require no seals or check valves.

If one is responsible for the operation and maintenance of a metering pump, one must be aware that a pump differs in many aspects from other flowmeters. For example, the pump motor must be lubricated periodically, and the pump must not be operated without liquid in it. The inlet piping must be designed to prevent cavitation. Running a pump dry or cavitating it will cause damage.

A metering pump should be calibrated, not only before it is first used but also periodically during its operation. The calibration should duplicate fluid properties, suction and discharge pressures, and inlet and outlet piping configuration.

© 2003 by Béla Lipták

Reference

1. Hernandez, L. A., Controlled volume pumps, *Chemical Eng.*, October 21, 1966.

Bibliography

Boyes, W. H., Pumps and flowmeters hand in hand, *Flow Control,* September 2001.

Gibson, I. H., Variable speed pumps for flow control, in *Proc. ISA/93 Conference,* Chicago, 1993.

Greene, A. M. Jr., *Pumping Machinery: A Treatise on the History, Design, and Operation of Various Forms of Pumps,* John Wiley & Sons, New York, 1911.

Karassik, I. J., Messina, J. P., Cooper, P., and Heald, C. C., Eds., *Pump Handbook,* 3rd ed., McGraw-Hill, New York, 2000.

Leafquist, E., Flow verification systems for small metering pumps, *Flow Control,* December 1998.

Metering pump survey, *Instruments and Control Syst.*, 103–109, April 1971.

Payne, D. C., Reliable viscous output with positive-displacement pumps, *Chemical Eng.,* February 23, 1970.

Poyton, J. P., *Metering Pumps: Selection and Application*, Marcel Dekker, New York, 1983.

© 2003 by Béla Lipták

2.15 Orifices

W. H. HOWE (1969) **B. G. LIPTÁK** (1995), **REVIEWED BY S. RUDBÄCH**
J. B. ARANT (1982, 2003)

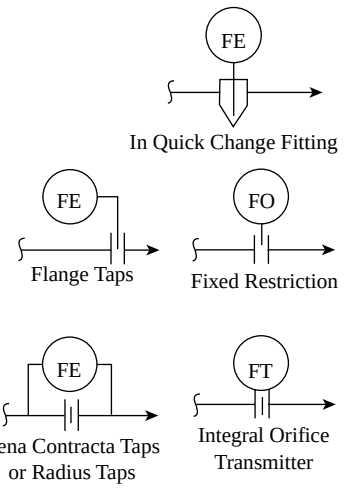

Flow Sheet Symbol

Design Pressure	For plates, limited by readout device only; integral orifice transmitter to 1500 PSIG (10.3 MPa)
Design Temperature	This is a function of associated readout system, only when the differential-pressure unit must operate at the elevated temperature. For integral orifice transmitter, the standard range is –20 to 250°F (–29 to 121°C).
Sizes	Maximum size is pipe size
Fluids	Liquids, vapors, and gases
Flow Range	From a few cubic centimeters per minute using integral orifice transmitters to any maximum flow, limited only by pipe size
Materials of Construction	There is no limitation on plate materials. Integral orifice transmitter wetted parts can be obtained in steel, stainless steel, Monel®, nickel, and Hastelloy®.
Inaccuracy	The orifice plate; if the bore diameter is correctly calculated, prepared, and installed, the orifice can be accurate to ±0.25 to ±0.5% of actual flow. When a properly calibrated conventional d/p cell is used to detect the orifice differential, it will add ±0.1 to ±0.3% of full-scale error. The error contribution of properly calibrated "smart" d/p cells is only 0.1% of actual span.
Smart d/p Cells	Inaccuracy of ±0.1%, rangeability of 40:1, built-in PID algorithm
Rangeability	If one defines rangeability as the flow range within which the combined flow measurement error does not exceed ±1% of actual flow, then the rangeability of conventional orifice installations is about 3:1 maximum. When using intelligent transmitters with automatic switching capability between the "high" and the "low" span, the rangeability can approach 10:1.
Cost	A plate only is $100 to $300, depending on size and materials. For steel orifice flanges from 2 to 12 in. (50 to 300 mm), the cost ranges from $250 to $1200. For flanged meter runs in the same size range, the cost ranges from $500 to $3500. The cost of electronic or pneumatic integral orifice transmitters is between $1500 and $2500. The cost of d/p transmitters ranges from $1000 to $2500, depending on type and "intelligence."
Partial List of Suppliers	ABB Process Automation (www.abb.com/processautomation) (incl. integral orifices) Daniel Measurement and Control (www.danielind.com) (orifice plates and plate changers) The Foxboro Co. (www.foxboro.com) (incl. integral orifices) Honeywell Industrial Control (www.honeywell.com/acs/cp) Meriam Instrument (www.meriam.com) (orifice plates) Rosemount Inc. (www.rosemount.com) Tri-Flow Inc. (www.triflow.com)

© 2003 by Béla Lipták

In addition, orifice plates, flanges and accessories can be obtained from most major instrument manufacturers.

HEAD-TYPE FLOWMETERS

Head-type flowmeters compose a class of devices for fluid flow measurement including orifice plates, venturi tubes, weirs, flumes, and many others. They change the velocity or direction of the flow, creating a measurable differential pressure or "pressure head" in the fluid.

Head metering is one of the most ancient of flow detection techniques. There is evidence that the Egyptians used weirs for measurement of irrigation water in the days of the Pharaohs and that the Romans used orifices to meter water to households in Caesar's time. In the 18th century, Bernoulli established basic relationship between pressure head and velocity head, and Venturi published on the flowtube bearing his name. However, it was not until 1887 that Clemens Herschel developed the commercial venturi tube. Work on the conventional orifice plate for gas flow measurement was commenced by Weymouth in the United States in 1903. Recent developments include improved primary elements, refinement of data, more accurate and versatile test and calibrating equipment, better differential-pressure sensors, and many others.

Theory of Head Meters

Head-type flow measurement derives from Bernoulli's theorem, which states that, in a flowing stream, the sum of the pressure head, the velocity head, and the elevation head at one point is equal to their sum at another point in the direction of flow plus the loss due to friction between the two points. Velocity head is defined as the vertical distance through which a liquid would fall to attain a given velocity. Pressure head is the vertical distance that a column of the flowing liquid would rise in an open-ended tube as a result of the static pressure.

This principle is applied to flow measurement by altering the velocity of the flowing stream in a predetermined manner, usually by a change in the cross-sectional area of the stream. Typically, the velocity at the throat of an orifice is increased relative to the velocity in the pipe. There is a corresponding increase in velocity head. Neglecting friction and change of elevation head, there is an equal decrease in pressure head (Figure 2.15a). This difference between the pressure in the pipe just upstream of the restriction and the pressure at the throat is measured. Velocity is determined from the ratio of

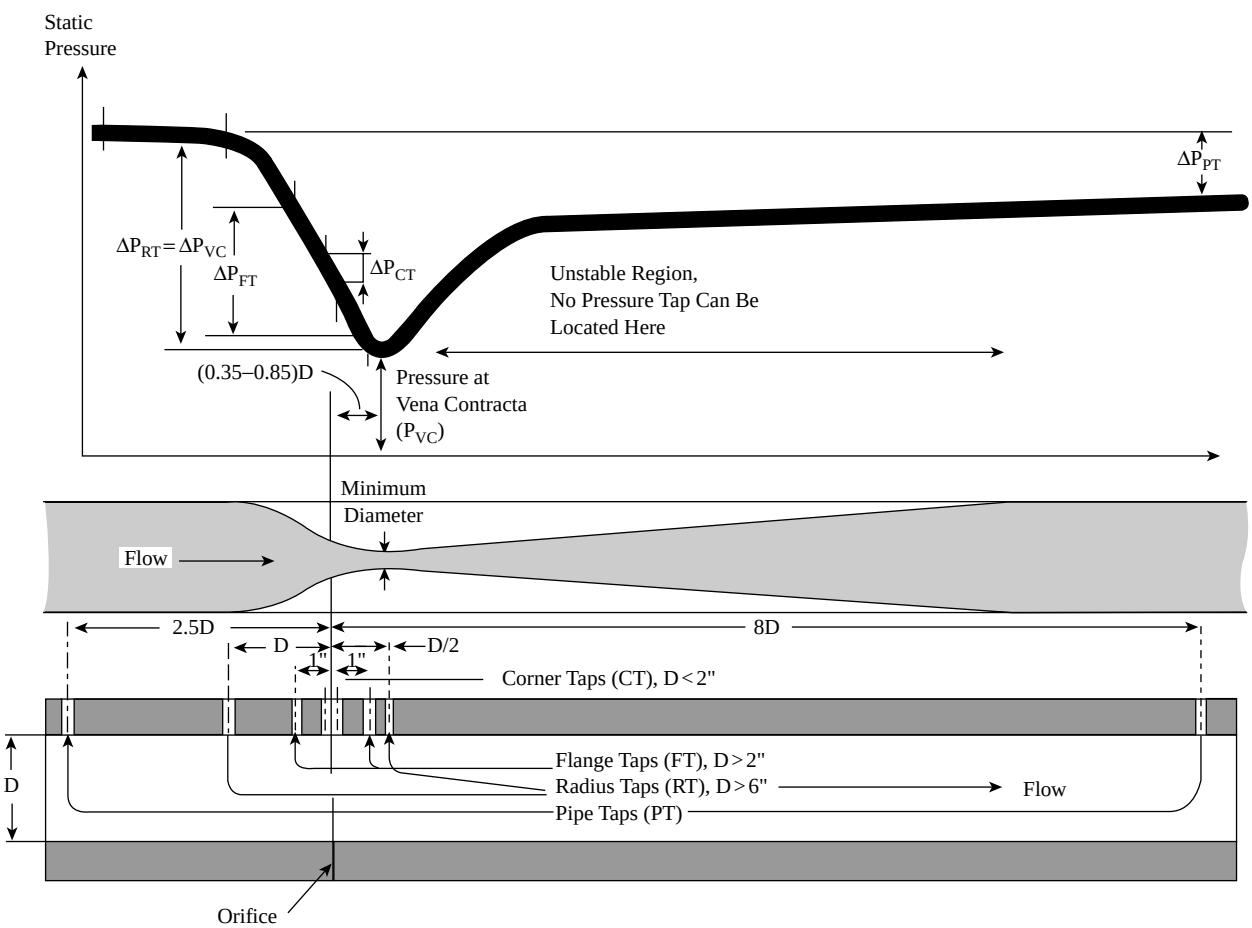

FIG. 2.15a
Pressure profile through an orifice plate and the different methods of detecting the pressure drop.

© 2003 by Béla Lipták

the cross-sectional areas of pipe and flow nozzle, and the difference of velocity heads given by differential-pressure measurements. Flow rate derives from velocity and area. The basic equations are as follows:

$$V = k\sqrt{\frac{h}{\rho}} \qquad \textbf{2.15(1)}$$

$$Q = kA\sqrt{\frac{h}{\rho}} \qquad \textbf{2.15(2)}$$

$$W = kA\sqrt{h\rho} \qquad \textbf{2.15(3)}$$

where

V = velocity
Q = volume flow rate
W = mass flow rate
A = cross-sectional area of the pipe
h = differential pressure between points of measurement
ρ = the density of the flowing fluid
k = a constant that includes ratio of cross-sectional area of pipe to cross-sectional area of nozzle or other restriction, units of measurement, correction factors, and so on, depending on the specific type of head meter

For a more complete derivation of the basic flow equations, based on considerations of energy balance and hydrodynamic properties, consult References 1, 2, and 3.

Head Meter Characteristics

Two fundamental characteristics of head-type flow measurements are apparent from the basic equations. First is the square root relationship between flow rate and differential pressure. Second, the density of the flowing fluid must be taken into account both for volume and for mass flow measurements.

The Square Root Relationship This relationship has two important consequences. Both are primarily concerned with readout. The primary sensor (orifice, venturi tube, or other device) develops a head or differential pressure. A simple linear readout of this differential pressure expands the high end of the scale and compresses the low end in terms of flow. Fifty percent of full flow rate produces 25% of full differential pressure. At this point, a flow change of 1% of full flow results in a differential pressure change of 1% of full differential. At 10% flow, the total differential pressure is only 1%, and a change of 1% of full scale flow (10% relative change) results in only 0.2% full scale change in differential pressure. Both accuracy and readability suffer. Readability can be improved by a transducer that extracts the square root of the differential pressure to give a signal linear with flow rate. However, errors in the more complex square root transducer tend to decrease overall accuracy.

For a large proportion of industrial processes, which seldom operate below 30% capacity, a device with pointer or pen motion that is linear with differential pressure is generally adequate. Readout directly in flow can be provided by a square root scale. Where maximum accuracy is important, it is generally recommended that the maximum-to-minimum flow ratio shall not exceed 3:1, or at the most 3.5:1, for any single head-type flowmeter. The high repeatability of modern differential-pressure transducers permits a considerably wider range for flow control where constancy and repeatability of low rate are the primary concern. However, where flow variations approach 10:1, the use of two primary flow units of different capacities, two differential-pressure sensors with different ranges, or both is generally recommended. It should be emphasized that the primary head meter devices produce a differential pressure that corresponds accurately to flow over a wide range. Difficulty arises in the accurate measurement of the corresponding extremely wide range of differential pressure; for example, a 20:1 flow variation results in a 400:1 variation in differential pressure.

The second problem with the square root relationship is that some computations require linear input signals. This is the case when flow rates are integrated or when two or more flow rates are added or subtracted. This is not necessarily true for multiplication and division; specifically, flow ratio measurement and control do not require linear input signals. A given flow ratio will develop a corresponding differential pressure ratio over the full range of the measured flows.

Density of the Flowing Fluid Fluid density is involved in the determination of either mass flow rate or volume flow rate. In other words, head-type meters *do not* read out directly in either mass or volume flow (weirs and flumes are an exception, as discussed in Section 2.31). The fact that density appears as a square root gives head-type metering an actual advantage, particularly in applications where measurement of mass flow is required. Due to this square root relationship, any error that may exist in the value of the density used to compute mass flow is substantially reduced; a 1% error in the value of the fluid density results in a 0.5% error in calculated mass flow. This is particularly important in gas flow measurement, where the density may vary over a considerable range and where operating density is not easily determined with high accuracy.

β (Beta) Ratio Most head meters depend on a restriction in the flow path to produce a change in velocity. For the usual circular pipe and circular restriction, the β ratio is the ratio between the diameter of the restriction and the inside diameter of the pipe. The ratio between the velocity in the pipe and the velocity at the restriction is equal to the ratio of areas or β^2. For noncircular configurations, β is defined as the square root of the ratio of area of the restriction to area of the pipe or conduit.

© 2003 by Béla Lipták

Reynolds Number

The basic equations of flow assume that the velocity of flow is uniform across a given cross section. In practice, flow velocity at any cross section approaches zero in the boundary layer adjacent to the pipe wall and varies across the diameter. This flow velocity profile has a significant effect on the relationship between flow velocity and pressure difference developed in a head meter. In 1883, Sir Osborne Reynolds, an English scientist, presented a paper before the Royal Society proposing a single, dimensionless ratio (now known as Reynolds number) as a criterion to describe this phenomenon. This number, Re, is expressed as

$$R_e = \frac{VD\rho}{\mu} \qquad \textbf{2.15(4)}$$

where

V = velocity
D = diameter
ρ = density
μ = absolute viscosity

Reynolds number expresses the ratio of inertial forces to viscous forces. At a very low Reynolds number, viscous forces predominate, and inertial forces have little effect. Pressure difference approaches direct proportionality to average flow velocity and to viscosity. At high Reynolds numbers, inertial forces predominate, and viscous drag effects become negligible.

At low Reynolds numbers, flow is laminar and may be regarded as a group of concentric shells; each shell reacts in a viscous shear manner on adjacent shells, and the velocity profile across a diameter is substantially parabolic. At high Reynolds numbers, flow is turbulent, with eddies forming between the boundary layer and the body of the flowing fluid and propagating through the stream pattern. A very complex, random pattern of velocities develops in all directions. This turbulent mixing action tends to produce a uniform average axial velocity across the stream. The change from the laminar flow pattern to the turbulent flow pattern is gradual, with no distinct transition point. For Reynolds numbers above 10,000, flow is definitely turbulent. The coefficients of discharge of the various head-type flowmeters changes with Reynolds number (Figure 2.15b).

The value for k in the basic flow equations includes a Reynolds number factor. References 1 and 2 provide tables and graphs for Reynolds number factor. For head meters, this single factor is sufficient to establish compensation in coefficient for changes in ratio of inertial to frictional forces and for the corresponding changes in flow velocity profile; a gas flow with the same Reynolds number as a liquid flow has the same Reynolds number factor.

Compressible Fluid Flow

Density in the basic equations is assumed to be constant upstream and downstream from the primary device. For gas or vapor flow, the differential pressure developed results in a corresponding change in density between upstream and downstream pressure measurement points. For accurate calculations of gas flow, this is corrected by an *expansion factor* that has been empirically determined. Values are given in References 1 and 2. When practical, the full-scale differential pressure should be less than 0.04 times normal minimum static pressure (differential pressure, stated in inches of water, should be less than static pressure stated in PSIA). Under these conditions, the expansion factor is quite small.

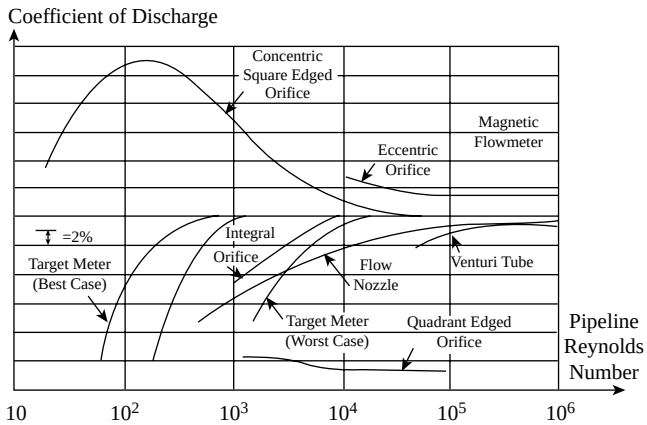

FIG. 2.15b
Discharge coefficients as a function of sensor type and Reynolds number.

Choice of Differential-Pressure Range

The most common differential-pressure range for orifices, venturi tubes, and flow nozzles is 0 to 100 in. of water (0 to 25 kPa) for full-scale flow. This range is high enough to minimize errors due to liquid density differences in the connecting lines to the differential-pressure sensor or in seal chambers, condensing chambers, and so on, caused by temperature differences. Most differential-pressure-responsive devices develop their maximum accuracy in or near this range, and the maximum pressure loss—3.5 PSI (24 kPa)—is not serious in most applications. (As shown in Figure 2.27f, the pressure loss in an orifice is about 65% when a β ratio of 0.75 is used.) The 100-in. range permits a 2:1 flow rate change in either direction to accommodate changes in operating conditions. Most differential-pressure sensors can be modified to cover the range from 25 to 400 in. of water (6.2 to 99.4 kPa) or more, either by a simple adjustment or by a relatively minor structural change. Applications in which the pressure loss up to 3.5 PSI is expensive or is not available can be handled either by selection of a lower differential-pressure range or by the use of a venturi tube or other primary element with high-pressure recovery. Some high-velocity flows will develop more than 100 in. of differential pressure with the maximum acceptable ratio of primary element effective diameter to pipe diameter. For these applications, a higher differential pressure is indicated. Finally, for low-static-pressure (less than 100 PSIA)

© 2003 by Béla Lipták

gas or vapor, a lower differential pressure is recommended to minimize the expansion factor.

Pulsating Flow and Flow "Noise"

Short-period (1 sec and less) variation in differential pressure developed from a head-type flowmeter primary element arises from two distinct sources. First, reciprocating pumps, compressors, and the like may cause a periodic fluctuation in the rate of flow. Second, the random velocities inherent in turbulent flow cause variations in differential pressure even with a constant flow rate. Both have similar results and are often mistaken for each other. However, their characteristics and the procedures used to cope with them are distinct.

Pulsating Flow The so-called pulsating flow from reciprocating pumps, compressors, and so on may significantly affect the differential pressure developed by a head-type meter. For example, if the amplitude of instantaneous differential-pressure fluctuation is 24% of the average differential pressure, an error of ±1% can be expected under normal operation conditions. For the pulsation amplitudes of 24, 48, and 98% values, the corresponding errors of ±1, ±4, and ±16% can be expected. The Joint ASME-AGA Committee on Pulsation reported that the ratio between errors varies roughly as the square of the ratio between differential-pressure fluctuations.

For liquid flow, there is indication that the average of the square root of the instantaneous differential pressure (essentially average of instantaneous flow signal) results in a lower error than the measurement of the average instantaneous differential pressure. However, for gas flow, extensive investigation has failed to develop any usable relationship between pulsation and deviation from coefficient beyond the estimate of maximum error.[4]

Operation at higher differential pressures is generally advantageous for pulsating flow. The only other valid approach to improve the accuracy of pulsating gas flow measurement is the location of the meter at a point where pulsation is minimized.

Flow "Noise" Turbulent flow generates a complex pattern of random velocities. This results in a corresponding variation or "noise" in the differential pressure developed at the pressure connections to the primary element. The amplitude of the noise may be as much as 10% of the average differential pressure with a constant flow rate. This noise effect is a complex hydrodynamic phenomenon and is not fully understood. It is augmented by flow disturbances from valves, fittings, and so on both upstream and downstream from the flowmeter primary element and, apparently, by characteristics of the primary element itself.

Tests based on average flow rate as accurately determined by static weight/time techniques (compared to accurate measurement of differential pressure including continuous, precise averaging of noise) indicate that the noise, when precisely averaged, introduces negligible (less than 0.1%) measurement error when the average flow is substantially constant (change of average flow rate is not more than 1% per second).[5] It should be noted that average differential pressure, not average flow (average of the square root of differential pressure), is measured, because the noise is developed by the random, not the average, flow.

Errors in the determination of true differential-pressure average will result in corresponding errors in flow measurement. For normal use, one form or another of "damping" in devices responsive to differential pressure is adequate. Where accuracy is a major concern, there must be no elements in the system that will develop a bias rather than a true average when subjected to the complex noise pattern of differential pressure.

Differential-pressure noise can be reduced by the use of two or more pressure-sensing taps connected in parallel for both high and low differential-pressure connections. This provides major noise reduction. Only minor improvement results from additional taps. Piezometer rings formed of multiple connections are frequently used with venturi tubes but seldom with orifices or flow nozzles.

THE ORIFICE METER

The orifice meter is the most common head-type flow measuring device. An orifice plate is inserted in the line, and the differential pressure across it is measured (Figure 2.15a). This section is concerned with the primary device (the orifice plate, its mounting, and the differential-pressure connections). Devices for the measurement of the differential pressure are covered in Chapters 3 and 5.

The orifice in general, and the conventional thin, concentric, sharp-edged orifice plate in particular, have important advantages that include being inexpensive manufacture to very close tolerances and easy to install and replace. Orifice measurement of liquids, gases, and vapors under a wide range of conditions enjoys a high degree of confidence based on a great deal of accurate test work.

The standard orifice plate itself is a circular disk; usually stainless steel, from 0.12 to 0.5 in. (3.175 to 12.70 mm) thick, depending on size and flow velocity, with a hole (orifice) in the middle and a tab projecting out to one side and used as a data plate (Figure 2.15c). The thickness requirement of the orifice plate is a function of line size, flowing temperature, and differential pressure across the plate. Some helpful guidelines are as follows.

By Size
- 2 to 12 in. (50 to 304 mm), 0.13 in. (3.175 mm) thick
- 14 in. (355 mm) and larger, 0.25 in. (6.35 mm) thick

By Temperature ≥600°F (316°C)
- 2 to 8 in. (50 to 203 mm), 0.13 in. (3.175 mm) thick
- 10 in. (254 mm) and larger, 0.25 in. (6.35 mm) thick

© 2003 by Béla Lipták

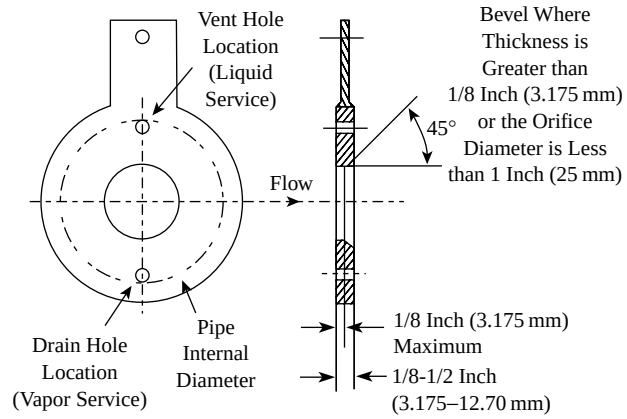

FIG. 2.15c
Concentric orifice plate.

Flow through the Orifice Plate

The orifice plate inserted in the line causes an increase in flow velocity and a corresponding decrease in pressure. The flow pattern shows an effective decrease in cross section beyond the orifice plate, with a maximum velocity and minimum pressure at the vena contracta (Figure 2.15a). This location may be from 0.35 to 0.85 pipe diameters downstream from the orifice plate, depending on β ratio and Reynolds number.

This flow pattern and the sharp leading edge of the orifice plate (Figure 2.15d) that produces it are of major importance. The sharp edge results in an almost pure line contact between the plate and the effective flow, with negligible fluid-to-metal friction drag at this boundary. Any nicks, burrs, or rounding of the sharp edge can result in surprisingly large measurement errors.

When the usual practice of measuring the differential pressure at a location close to the orifice plate is followed, friction effects between fluid and pipe wall upstream and downstream from the orifice are minimized so that pipe roughness has minimum effect. Fluid viscosity, as reflected in Reynolds number, does have a considerable influence, particularly at low Reynolds numbers. Because the formation of the vena contracta is an inertial effect, a decrease in the ratio of inertial to frictional forces (decrease in Reynolds number) and the corresponding change in the flow profile result in less constriction of flow at the vena contracta and an increase of the flow coefficient. In general, the sharp edge orifice plate should not be used at pipe Reynolds numbers under 2000 to 10,000 or more (Table 2.1e). The minimum recommended Reynolds number will vary from 10,000 to 15,000 for 2-in. (50-mm) through 4-in. (102-mm) pipe sizes for β ratios up to 0.5, and from 20,000 to 45,000 for higher β ratios. The Reynolds number requirement will increase with pipe size and β ratio and may range up to 200,000 for pipes 14 in. (355 mm) and larger. Maximum Reynolds numbers may be 10^6 through 4-in. (102-mm) pipe and 10^7 for larger sizes.

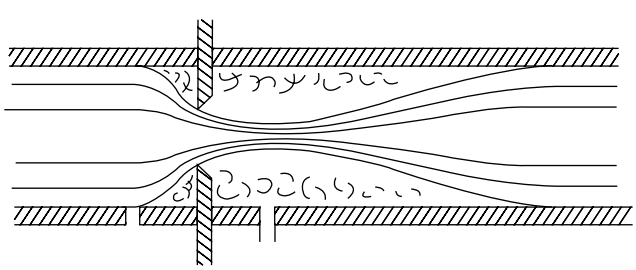

FIG. 2.15d
Flow pattern with orifice plate.

Location of Pressure Taps

For liquid flow measurement, gas or vapor accumulations in the connections between the pipe and the differential-pressure measuring device must be prevented. Pressure taps are generally located in the horizontal plane of the centerline of horizontal pipe runs. The differential-pressure measuring device is either mounted close-coupled to the pressure taps or connected through downward sloping connecting pipe of sufficient diameter to allow gas bubbles to flow up and back into the line. For gas, similar precautions to prevent accumulation of liquid are required. Taps may be installed in the top of the line, with upward sloping connections, or the differential-pressure measuring device may be close-coupled to taps in the side of the line (Figure 2.15e). For steam and similar vapors that are condensable at ambient temperatures, condensing chambers or their equivalent are generally used, usually with down-sloping connections from the side of the pipe to the measuring device. There are five common locations for the differential-pressure taps: flange taps, vena contracta taps, radius taps, full-flow or pipe taps, and corner taps.

In the United States, flange taps (Figures 2.15e and 2.15f) are predominantly used for pipe sizes 2 in. (50 mm) and larger. The manufacturer of the orifice flange set drills the taps so

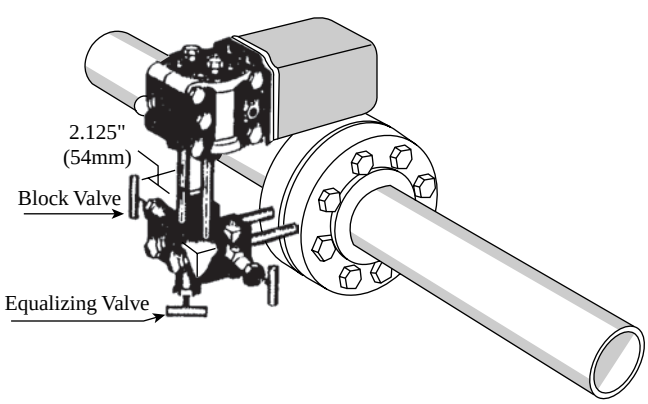

FIG. 2.15e
Measurement of gas flow with differential pressure transmitter and three-valve manifold.[3]

© 2003 by Béla Lipták

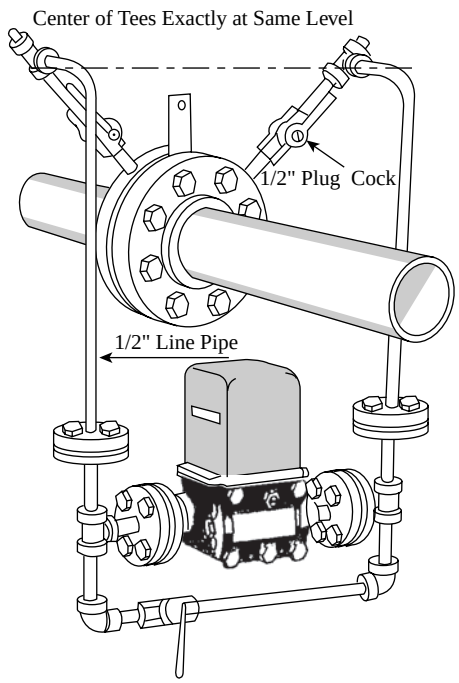

FIG 2.15f
Steam flow measurement using standard manifold.[3]

that the centerlines are 1 in. (25 mm) from the orifice plate surface. This location also facilities inspection and cleanup of burrs, weld metal, and so on that may result from installation of a particular type of flange. Flange taps are not recommended below 2 in. (50 mm) pipe size and cannot be used below 1.5 in. (37.5 mm) pipe size, since the vena contracta may be closer than 1 in. (25 mm) from the orifice plate. Flow for a distance of several pipe diameters beyond the vena contracta tends to be unstable and is not suitable for differential-pressure measurement (Figure 2.15a).

Vena contracta taps use an upstream tap located one pipe diameter upstream of the orifice plate and a downstream tap located at the point of minimum pressure. Theoretically, this is the optimal location. However, the location of the vena contracta varies with the orifice-to-pipe diameter ratio and is thus subject to error if the orifice plate is changed. A tap location too far downstream in the unstable area may result in inconsistent measurement. For moderate and small pipe, the location of the vena contracta is likely to lie at the edge of or under the flange. It is not considered good piping practice to use the hub of the flange to make a pressure tap. For this reason, vena contracta taps are normally limited to pipe sizes 6 in. (152 mm) or larger, depending on the flange rating and dimensions.

Radius taps are similar to vena contracta taps except that the downstream tap is located at one-half pipe diameter (one radius) from the orifice plate. This practically assures that the tap will not be in the unstable region, regardless of orifice diameter. Radius taps today are generally considered superior to the vena contracta tap, because they simplify the pressure

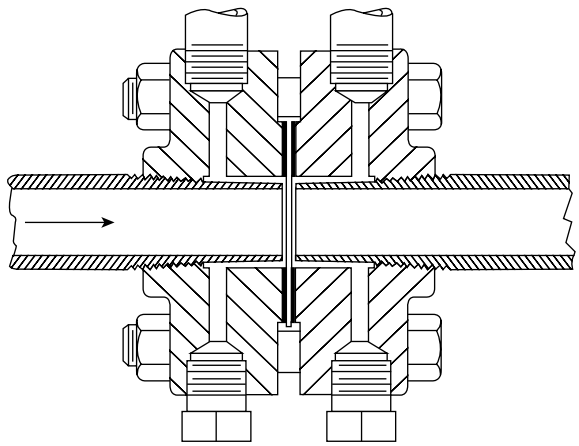

FIG 2.15g
Corner tap installation.

tap location dimensions and do not vary with changes in orifice β ratio. The same pipe size limitations apply as to the vena contracta tap.

Pipe taps are located 2.5 pipe diameters upstream and 8 diameters downstream from the orifice plate. Because of the distance from the orifice, exact location is not critical, but the effects of pipe roughness, dimensional inconsistencies, and so on are more severe. Uncertainty of measurement is perhaps 50% greater with pipe taps than with taps close to the orifice plate. These taps are normally used only where it is necessary to install an orifice meter in an existing pipeline and radius or where vena contracta taps cannot be used.

Corner taps (Figure 2.15g) are similar in many respects to flange taps, except that the pressure is measured at the "corner" between the orifice plate and the pipe wall. Corner taps are very common for all pipe sizes in Europe, where relatively small clearances exist in all pipe sizes. The relatively small clearances of the passages constitute possible sources of trouble. Also, some tests have indicated inconsistencies with high β ratio installations, attributed to a region of flow instability at the upstream face of the orifice. For this situation, an upstream tap one pipe diameter upstream of the orifice plate has been used. Corner taps are used in the United States primarily for pipe diameters of less than 2 in. (50 mm).

ECCENTRIC AND SEGMENTAL ORIFICE PLATES

The use of eccentric and segmental orifices is recommended where horizontal meter runs are required and the fluids contain extraneous matter to a degree that the concentric orifice would plug up. It is preferable to use concentric orifices in a vertical meter tube if at all possible. Flow coefficient data is limited for these orifices, and they are likely to be less accurate. In the absence of specific data, concentric orifice data may be applied as long as accuracy is of no major concern.

The eccentric orifice plate, Figure 2.15h, is like the concentric plate except for the offset hole. The segmental orifice

© 2003 by Béla Lipták

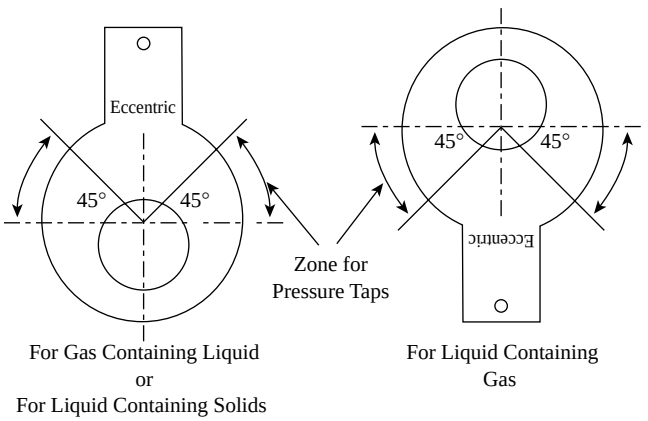

FIG. 2.15h
Eccentric orifice plate.

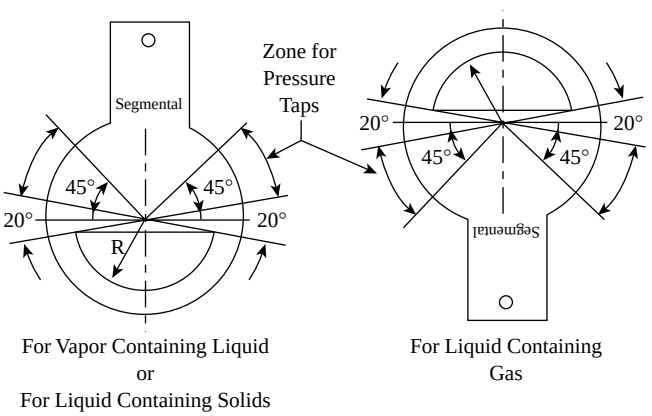

Pressure taps must always be located in solid area of plate and centerline of tap not nearer than 20° from intersection point of chord and arc.

FIG. 2.15i
Segmental orifice plate.

plate, Figure 2.15i, has a hole that is a segment of a circle. Both types of plates may have the hole bored tangent to the inside wall of the pipe or more commonly tangent to a concentric circle with a diameter no smaller than 98% of the pipe internal diameter. The segmental plate is parallel to the pipe wall. Care must be taken so that no portion of the flange or gasket interferes with the hole on either type plate. The equivalent β for a segmental orifice may be expressed as $\beta = \sqrt{a/A}$, where a is the area of the hole segment, and A is the internal pipe area.

In general, the minimum line size for these plates is 4 in. (102 mm). However, the eccentric plate can be made in smaller sizes as long as the hole size does not require beveling. Maximum line sizes are unlimited and contingent only on calculation data availability. Beta ratio limits are limited to between 0.3 and 0.8. Lower Reynolds number limit is 2000D (D in inches) but not less than 10,000. For compressible fluids, $\Delta P/P_1 \leq 0.30$, where ΔP and P_1 are in the same units.

Flange taps are recommended for both types of orifices, but vena contracta taps can be used in larger pipe sizes. The taps for the eccentric orifice should be located in the quadrants directly opposite the hole. The taps for the segmental orifice should always be in line with the maximum dam height. The straight edge of the dam may be beveled if necessary using the same criteria as for a square edge orifice. To avoid confusion after installation, the tabs on these plates should be clearly stamped "eccentric" or "segmental."

QUADRANT EDGE AND CONICAL ENTRANCE ORIFICE PLATES

The use of quadrant edge and conical entrance orifice plates is limited to lower pipe Reynolds numbers where flow coefficients for sharp-edged orifice plates are highly variable, in the range of 500 to 10,000. With these special plates, the stability of the flow coefficient increases by a factor of 10. The minimum allowable Reynolds number is a function of β ratio, and the allowable β ratio ranges are limited. Refer to Table 2.15j for β ratio range and minimum allowable Reynolds number. The maximum allowable pipe Reynolds number ranges from $500{,}000 \times (\beta - 0.1)$ for quadrant edge to $200{,}000 \times (\beta)$ for the conical entrance plate. The conical entrance also has a minimum $D \geq 0.25$ in. (6.35 mm). For compressible fluids, $\Delta P/P_1 \leq 0.25$ where ΔP and P_1 are in the same units

Flange pressure taps are preferred for the quadrant edge, but corner and radius taps can also be used with the same flow coefficients. For the conical entrance units, reliable data

TABLE 2.15j
Minimum Allowable Reynolds Numbers for Conical and Quadrant Edge Orifices

Type	*Re Limits*											
Conical entrance	β	0.10	0.11	0.12	0.13	0.14	0.15	0.16	0.17	0.18	0.19	
	Re	25	28	30	33	35	38	40	43	45	48	
	β	0.20	0.21	0.22	0.23	0.24	0.25	0.26	0.27	0.28	0.29	0.30
	Re	50	53	55	58	60	63	65	68	70	73	75
Quadrant edge	β	0.25	0.30	0.35	0.40	0.45	0.50	0.55	0.60			
	Re	250	300	400	500	700	1000	1700	3300			

© 2003 by Béla Lipták

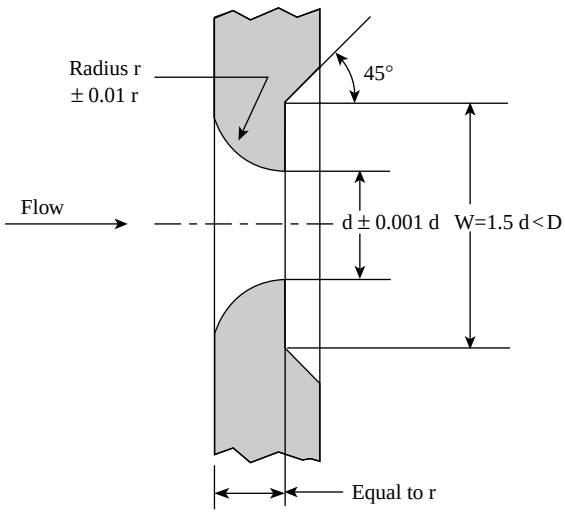

FIG. 2.15k
Quadrant edge orifice plate.

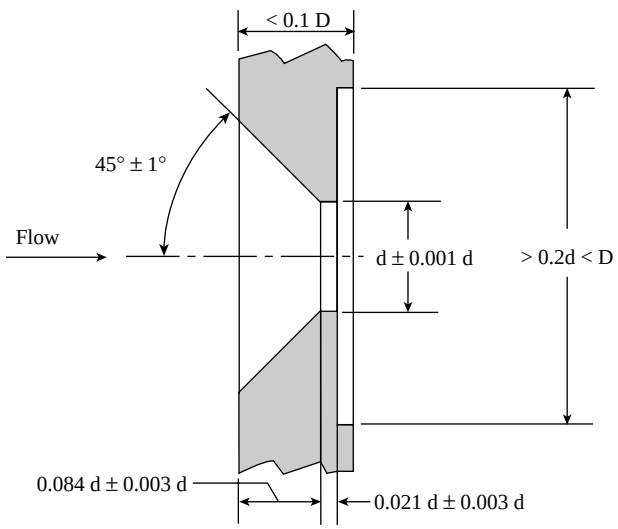

FIG. 2.15l
Conical entrance orifice plate.

is available for corner taps only. A typical quadrant edge plate is shown in Figure 2.15k, and a typical conical entrance orifice plate is shown in Figure 2.15l. These plates are thicker and heavier than the normal sharp-edge type. Because of the critical dimensions and shape, the quadrant edge is difficult to manufacture; it is recommended that it be purchased from skilled commercial fabricators. The conical entrance is much easier to make and could be made by any qualified machine shop. While these special orifice forms are very useful for lower Reynolds numbers, it is recommended that, for a pipe Re > 100,000, the standard sharp-edge orifice be used. To avoid confusion after installation, the tabs on these plates should be clearly stamped "quadrant" or "conical."

An application summary of the different orifice plates is given in Table 2.15m. For dirty gas service, the annular orifice plate (Figure 2.24a) can also be considered.

TABLE 2.15m
Selecting the Right Orifice Plate for a Particular Application

Orifice Type	*Appropriate Process Fluid*	*Reynolds Number Range*	*Normal Pipe Sizes, in. (mm)*
Concentric, square edge	Clean gas and liquid	Over 2000	0.5 to 60 (13 to 1500)
Concentric, quadrant, or conical edge	Viscous clean liquid	200 to 10,000	1 to 6 (25 to 150)
Eccentric or segmental square edge	Dirty gas or liquid	Over 10,000	4 to 14 (100 to 350)

THE INTEGRAL ORIFICE

Miniature flow restrictors provide a convenient primary element for the measurement of small fluid flows. They combine a plate with a small hole to restrict flow, its mounting and connections, and a differential-pressure sensor—usually a pneumatic or electronic transmitter. Units of this type are often referred to as *integral orifice* flowmeters. Interchangeable flow restrictors are available to cover a wide range of flows. A common minimum standard size is a 0.020-in. (0.5-mm) throat diameter, which will measure water flow down to 0.0013 GPM (5 cm^3/min) or airflow at atmospheric pressure down to 0.0048 SCFH (135 cm^3/min) (Figure 2.15n).

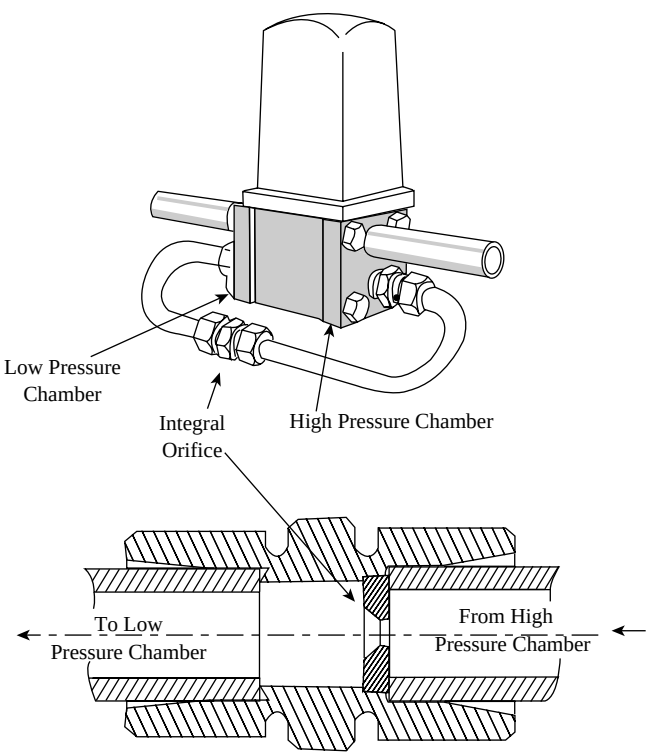

FIG. 2.15n
Typical integral orifice meter.

© 2003 by Béla Lipták

Miniature flow restrictors are used in laboratory-scale processes and pilot plants, to measure additives to major flow streams, and for other small flow measurements. Clean fluid is required, particularly for the smaller sizes, not only to avoid plugging of the small orifice opening but because a buildup of even a very thin layer on the surface of the element will cause an error.

There is little published data on the performance of these small restrictors. These are proprietary products with performance data provided by the supplier. Where accuracy is important, direct flow calibration is recommended. Water flow calibration, using tap water, a soap watch, and a glass graduate (or a pail and scale) to measure total flow, is readily carried out in the instrument shop or laboratory. For viscous liquids, calibration with the working fluid is preferable, because viscosity has a substantial effect on most units. Calibration across the working range is recommended, given that precise conformity to the square law may not exist. Some suppliers are prepared to provide calibrated units for an added fee.

INSTALLATION

The orifice is usually mounted between a pair of flanges. Care should be exercised when installing the orifice plate to be sure that the gaskets are trimmed and installed such that they do not protrude across the face of the orifice plate beyond the inside pipe wall (Figure 2.15o). A variety of special devices are commercially available for mounting orifice plates, including units that allow the orifice plate to be inserted and removed from a flowline without interrupting the flow (Figure 2.15p). Such manually operated or motorized orifice fittings can also be used to change the

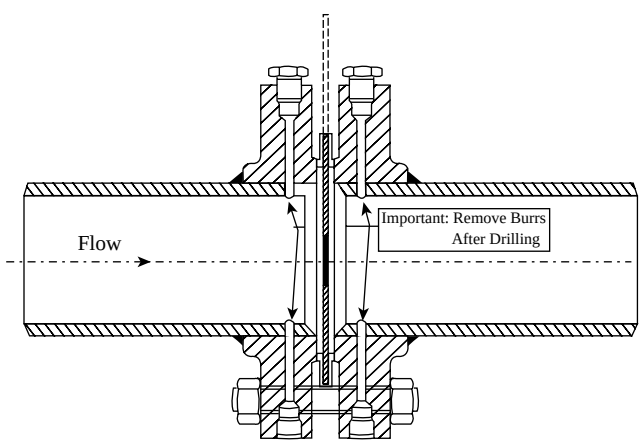

FIG. 2.15o

Prefabricated meter run with inside surface of the pipe machined for smoothness after welding for a distance of two diameters from each flange face. The mean pipe ID is averaged from four measurements made at different points. They must not differ by more than 0.3%.[3]

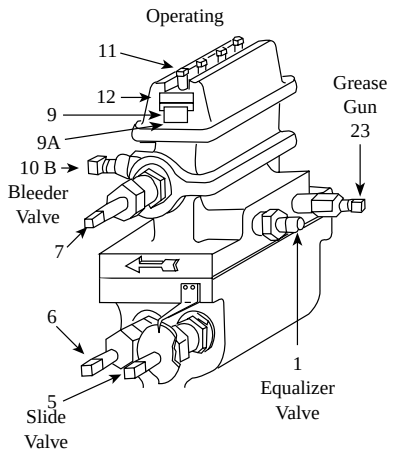

To Remove Orifice Plate	To Replace Orifice Plate
(A) Open No. 1 (Max. Two Turns Only)	(A) Close 10 B
(B) Open No. 5	(B) Rotate No. 7 Slowly Until Plate Carrier is Clear of Sealing Bar and Gasket Level. Do Not Lower Plate Carrier onto Slide Valve.
(C) Rotate No. 6	(C) Replace Nos. 9A, 9, and 12
(D) Rotate No. 7	(D) Tighten No. 11
(E) Close No. 5	(E) Open No. 1
(F) Close No. 1	(F) Open No. 5
(G) Open No. 10 B	(G) Rotate No. 7
(H) Lubricate thru No. 23	(H) Rotate No. 6
(I) Loosen No. 11 (do not remove No. 12)	(I) Close No. 5
(J) Rotate No. 7 to free Nos. 9 and 9A	(J) Close No. 1
(K) Remove Nos. 12, 9, and 9A	(K) Open 10 B
	(L) Lubricate thru No. 23
	(B) Close No. 10 B

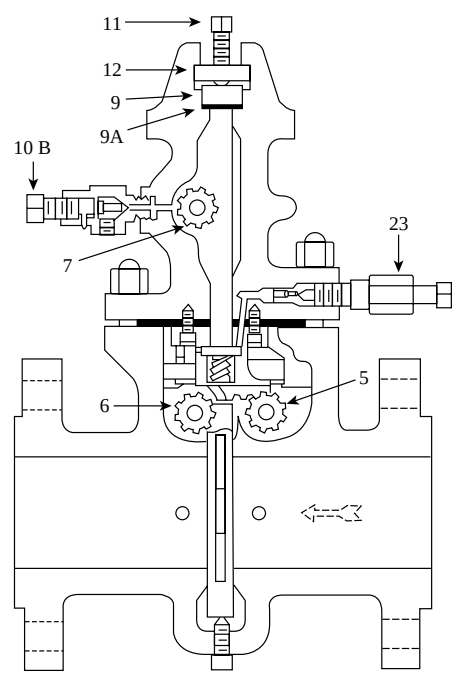

Side Sectional Elevation

FIG. 2.15p

Typical orifice fitting. (Courtesy of Daniel Measurement and Control.)

© 2003 by Béla Lipták

flow range by sliding a different orifice opening into the flowing stream.

To avoid errors resulting from disturbance of the flow pattern due to valves, fittings, and so forth, a straight run of smooth pipe before and after the orifice is recommended. Required length depends on β ratio (ratio of the diameter of the orifice to inside diameter of the pipe) and the severity of the flow disturbance.

For example, an upstream distance to the orifice plate of 45 pipe diameters with 0.75 β ratio is the minimum recommendation for a throttling valve. For a single elbow at the same β, the minimum distance would be only 17 pipe diameters. Figure 2.15q gives minimum values for a variety of upstream disturbances. Upstream lengths greater than the minimum are recommended. A downstream pipe run of five pipe diameters from the orifice plate is recommended in all cases. This straight run should not be interrupted by thermowells or other devices inserted into the pipe.

Where it is not practical to install the orifice in a straight run of the desired length, the use of a straightening vane to eliminate swirls or vortices is recommended. Straightening vanes are manufactured in various configurations (Figure 2.15r) and are available from commercial meter tube fabricators. They should be installed so that there are at least two pipe diameters between the disturbance source and vane entry and at least six pipe diameters from the vane exit to the upstream high pressure tap of the orifice.

The installation of the pressure taps is important. Burrs and protrusions at the tap entry point must be removed. (Figure 2.15o). The tap hole should enter the line at a right angle to the inside pipe wall and should be slightly beveled. Considerable error can result from protrusions that react with the flow and generate spurious differential pressure. Careful installation is particularly important when full-flow taps are located in areas of full pipe velocity and in positions that are difficult to inspect.

LIMITATIONS

Certain limitations exist in the application of the concentric, sharp-edged orifice.

1. The concentric orifice plate is not recommended for slurries and dirty fluids, where solids may accumulate near the orifice plate (Table 2.15m).
2. The sharp-edged orifice plate is not recommended for strongly erosive or corrosive fluids, which tend to round over the sharp edge. Orifice plates made of materials that resist erosion or corrosion are used for conditions that are not too severe.
3. For flows at less than 10,000 Reynolds number (determined in the pipe), the correction factor for Reynolds number may introduce problems in determining the total flow when the flow rate varies considerably (Figure 2.15b). The quadrant-edged orifice plate is recommended for this application in preference to the sharp-edged plate (Table 2.15m).
4. For liquids with entrained gas or vapor, a "vent hole" in the plate can be used for horizontal meter runs to prevent accumulation of gas ahead of the orifice plate (Figure 2.15c). If the diameter of the vent hole is less than 10% of the orifice diameter, then the flow is less than 1% of the total flow. If this error cannot be tolerated, appropriate correction can be made to the orifice calculation. On dirty service, vent or drain holes are considered to be of little value, because they are subject to plugging; they are not recommended.
5. In a similar fashion, a drain or weep hole can be provided for gas with entrained liquid. However, it is recommended that meters for liquid with entrained gas or gas with entrained liquid services be installed vertically. Normally, the flow direction would be upward for liquids and downward for gases. For severe entrainment situations, eccentric or segmental orifice plates should be used.
6. The basic flow equations are based on flow velocities well below sonic. Orifice measurement is also used for flows approaching sonic velocity but requires a different theoretical and computational approach.
7. For concentric orifice plates, it is recommended that the β ratio be limited to a range of 0.2 to 0.65 for best accuracy. In exceptional cases, this can be extended to a range of 0.15 to 0.75.
8. For large flows, the pressure loss through an orifice can result in significant cost in terms of power requirements (see Section 2.1). Venturi tubes with relatively large pressure recovery substantially decrease the pressure loss. Lo-Loss Tubes, Dall Tubes, Foster Flow Tubes, and similar proprietary primary elements develop 95% or better pressure recovery. The pressure loss is less than 5% of differential pressure (see Figure 2.29f). Elbow taps involve no added pressure loss (see Section 2.6). Pitot tube elements introduce negligible loss. Orifice plates can be sized for full-scale differential pressure ranging from 5 in. (127 mm) of water to several hundred inches of water. Most commonly the range is from 20 to 200 in. (508 to 5080 mm) of water. The pressure recovery ratio of an orifice (except for pipe taps) can be estimated by $(1 - \beta^2)$.
9. For compressible fluids, $\Delta P/P_1$ should be ≤ 0.25 where ΔP and P_1 are in the same units. This will minimize the errors and corrections required for density changes in flow through the orifice.
10. The use of vent and drain holes is discouraged, if in order to keep them from plugging, they would need to be large enough to adversely affect accuracy.

© 2003 by Béla Lipták

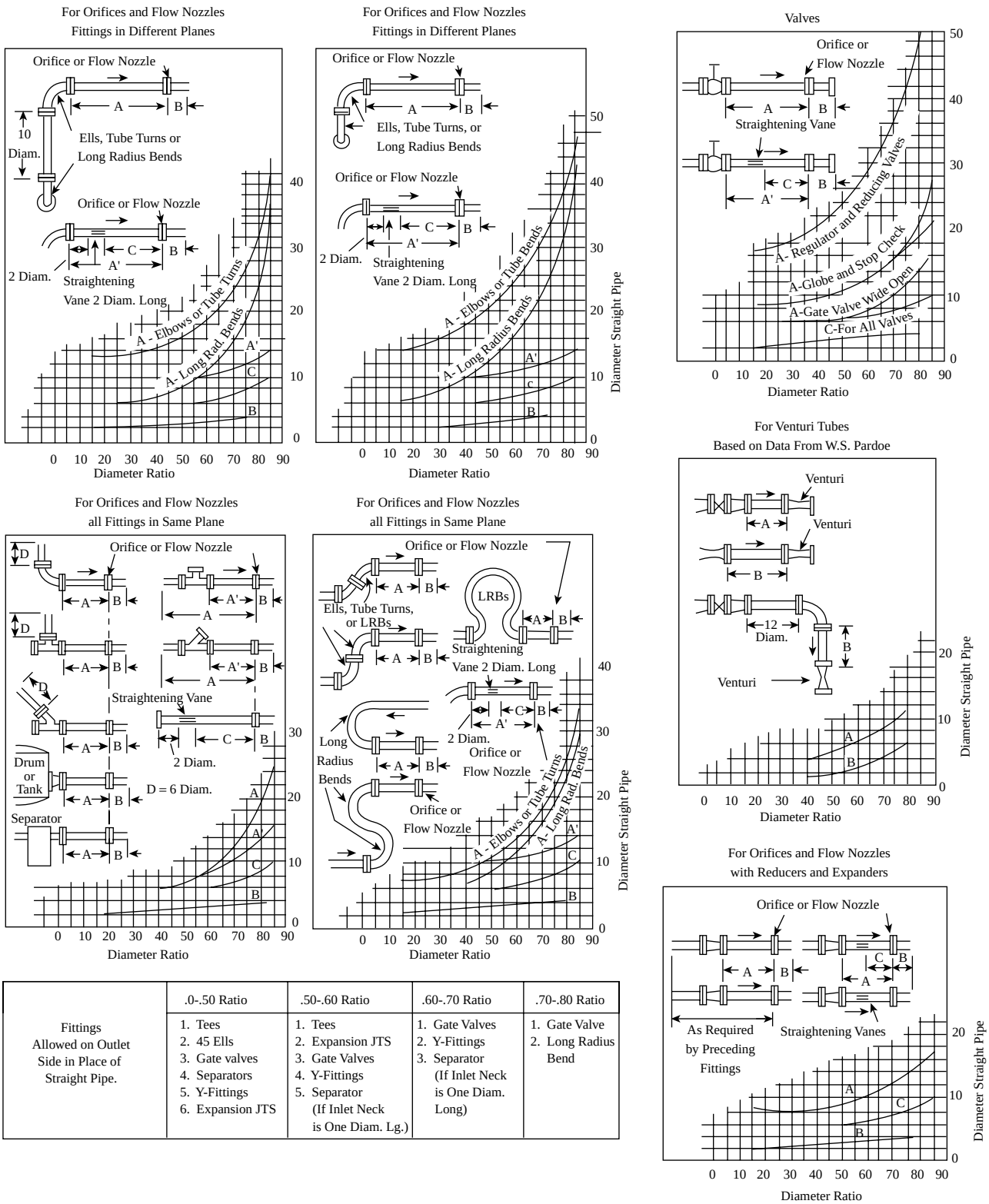

Fittings Allowed on Outlet Side in Place of Straight Pipe.	.0-.50 Ratio	.50-.60 Ratio	.60-.70 Ratio	.70-.80 Ratio
	1. Tees 2. 45 Ells 3. Gate valves 4. Separators 5. Y-Fittings 6. Expansion JTS	1. Tees 2. Expansion JTS 3. Gate Valves 4. Y-Fittings 5. Separator (If Inlet Neck is One Diam. Lg.)	1. Gate Valves 2. Y-Fittings 3. Separator (If Inlet Neck is One Diam. Long)	1. Gate Valve 2. Long Radius Bend

FIG. 2.15q

Orifice straight-run requirements. (Reprinted courtesy of The American Society of Mechanical Engineers.)

© 2003 by Béla Lipták

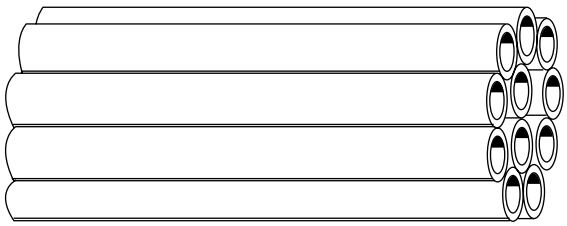

FIG 2.15r
Straightening vane.

ORIFICE BORE CALCULATIONS

Accurate flow calibration, traceable to recognized standards and using the working fluid under service conditions, is difficult and expensive. For large gas flows, it is nearly impossible and is rarely done. A major advantage of orifice metering is the ease with which flow can be accurately determined from a few simple, readily available measurements. In particular, for the concentric, sharp-edged orifice, measurement confidence is supported by a large body of experience and precise, painstaking tests.

Precise flow calculations are quite complex, although the calculation methods and equations have been well standardized. These calculation methods are thoroughly covered in the references at the end of this section. Most, if not all, of the calculations have been automated using readily available computer software for both volumetric and mass flow calculations.

The Old Approach

Before the proliferation of computers, approximate calculations were used, giving only moderate accuracy. These are illustrated below more for historical perspective than as a recommended technique. Figure 2.15s illustrates how orifice bore diameters were approximated, and Table 2.15t lists the maximum air, water, and steam flow capacities for both flange and pipe tap installations at various pressure drops. When using Figure 2.15s, the following equations were used to determine the orifice bore.

For liquid flow,

$$Z = \frac{5.663\ ER\sqrt{hG_f}}{GPM\ G_t} \qquad \textbf{2.15(5)}$$

For steam,*

$$Z = \frac{358.9\ ERY}{lbm/hr}\sqrt{\frac{h}{V}} \qquad \textbf{2.15(6)}$$

For gas,*

$$Z = \frac{7727\ ERY}{SCFH}\sqrt{\frac{hP_f}{GT_f}} \qquad \textbf{2.15(7)}$$

* For steam and gas, h expressed in inches H_2O should be equal to or less than P_f expressed in PSIA units.

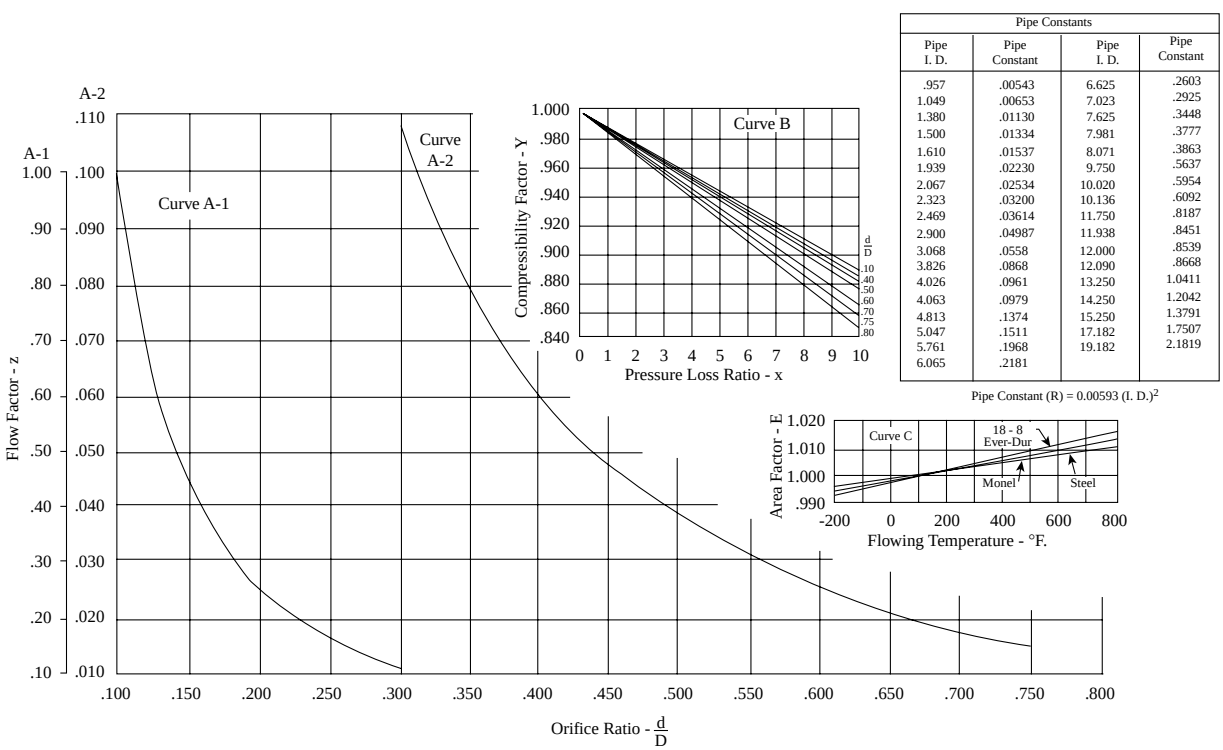

FIG. 2.15s
Orifice bore determination chart (flange taps). © 1946 by Taylor Instrument Companies. (ABB Kent-Taylor Inc.)

© 2003 by Béla Lipták

TABLE 2.15t
*Orifice Flowmeter Capacity Table**

				Flange and Vena Contracta Taps			*Pipe Taps*		
				Liquid	*Steam*	*Gas*	*Liquid*	*Steam*	*Gas*
Pipe Size	*Actual Inside Diam. (I.D.) Sched. 40*	*Maximum Orifice Diam.*	*Meter Range*	*Water (SG = 1)*	*100 PSIG Saturated*	*Air (SG = 1.0) @ 100 PSIG and 60°F*	*Water (SG = 1)*	*100 PSIG Saturated*	*Air (SG = 1.0) @ 100 PSIG and 60°F*
Inches	*Inches*	*Inches*	*Inches of Water*	*Gal./Min.*	*Lb./Hr.*	*Std. Cu. Ft/Min.*	*Gal./Min.*	*Lb./Hr.*	*Std. Cu. Ft./Min.*
$\frac{1}{2}$	0.622	0.435	200	10.6	338	119	15.7	506	178
			100	7.5	239	84	11.2	358	126
			50	5.3	170	59	7.9	253	89
			20	3.3	107	37	5.0	160	57
			10	2.4	76	27	3.5	113	40
			2.5	1.17	38	13	1.7	56	20
1	1.049	0.734	200	30	963	295	44.8	1440	507
			100	21.2	682	239	31.7	1017	358
			50	15.0	482	170	22.4	719	253
			20	9.5	305	108	14.2	455	160
			10	6.7	216	76	10.1	323	113
			2.5	3.35	108	38	5.0	161	56
$1\frac{1}{2}$	1.610	1.127	200	70.7	2270	796	105	3380	1190
			100	50.1	1600	564	75	2390	844
			50	35.1	1135	399	52.7	1690	596
			20	22.4	718	253	33.4	1070	378
			10	15.8	683	178	23.6	758	267
			2.5	7.9	254	90	11.8	379	133
2	2.067	1.448	200	116	3740	1313	174	5580	1966
			100	83	2645	932	123	3950	1390
			50	58.5	1870	658	87	2790	983
			20	37.0	1183	417	55	1768	623
			10	26.1	840	295	39	1252	440
			2.5	13.1	420	148	19.4	625	220
3	3.068	2.147	200	255	8240	2905	383	12300	4330
			100	181	5830	2080	271	8700	3070
			50	128	4125	1460	191	6160	2175
			20	81.5	2610	922	121	3900	1375
			10	57.5	1843	653	86	2760	975
			2.5	28.8	915	325	43	1366	485
4	4.026	3.02	200	512	16400	5780	764	24500	8630
			100	362	11600	4090	540	17300	6100
			50	255	8170	2890	382	12200	4310
			20	162	5180	1830	242	7730	2730
			10	115	3670	1290	172	5470	1930
			2.5	57	1820	647	85	2710	965
5	5.047	3.78	200	800	25600	9050	1190	38200	13500
			100	557	18200	6410	845	27100	9560
			50	402	12900	4530	598	19200	6760
			20	253	8110	2870	378	12100	4280
			10	180	5750	2020	268	8580	3020
			2.5	90	2880	1010	134	4290	1510

© 2003 by Béla Lipták

TABLE 2.15t Continued
*Orifice Flowmeter Capacity Table**

				Flange and Vena Contracta Taps			Pipe Taps		
				Liquid	Steam	Gas	Liquid	Steam	Gas
Pipe Size	Actual Inside Diam. (I.D.) Sched. 40	Maximum Orifice Diam.	Meter Range	Water (SG = 1)	100 PSIG Saturated	Air (SG = 1.0) @ 100 PSIG and 60°F	Water (SG = 1)	100 PSIG Saturated	Air (SG = 1.0) @ 100 PSIG and 60°F
Inches	Inches	Inches	Inches of Water	Gal./Min.	Lb./Hr.	Std. Cu. Ft/Min.	Gal./Min.	Lb./Hr.	Std. Cu. Ft./Min.
6	6.065	4.55	200	1158	37100	13100	1730	55300	19500
			100	820	26300	9250	1223	39200	13800
			50	580	18600	6540	866	27700	9760
			20	367	11700	4140	547	17500	6180
			10	258	8310	2930	387	12400	4370
			2.5	129	4150	1460	193	6200	2180
8	7.981	5.9858	200	2000	64104	22511	2980	95709	33692
			100	1413	45320	15952	2110	67682	23853
			50	1000	32052	11285	1492	47855	16846
			20	634	20275	7156	943	30263	10674
			10	447	14386	5054	668	21468	7543
			2.5	223	7186	2534	333	10719	3772
10	10.020	7.5150	200	3150	101020	35475	4700	150825	53094
			100	2230	71481	25138	3325	106658	37589
			50	1578	50510	17785	2355	75413	26547
			20	998	31950	11277	1487	47691	16821
			10	706	22671	7964	1052	33830	11887
			2.5	352	11324	3994	525	16891	5944
12	12.000	9.0000	200	4520	145000	51300	6750	216000	76500
			100	3200	103000	36200	4775	153000	45100
			50	2270	72400	25600	3380	108000	38200
			20	1430	46000	16200	2135	68600	24200
			10	1012	32400	11500	1512	48300	17100
			2.5	507	16200	5740	757	24200	8560
14	13.126	9.8445	200	5415	173398	60891	8060	258887	91135
			100	3830	122588	43148	5720	183076	64520
			50	2710	86699	30526	4040	129443	45567
			20	1715	54842	19356	2555	81860	28873
			10	1210	38914	13670	1808	58068	20404
			2.5	603	19437	6855	900	28994	10202
16	15.000	11.2500	200	7065	226442	79518	10520	338084	119014
			100	5000	160089	56347	7460	239081	84258
			50	3535	113221	39864	5275	169042	59507
			20	2240	71619	25277	3335	106902	37705
			10	1580	50818	17852	2360	75832	26646
			2.5	788	25383	8952	1175	37865	13323
18	16.876	12.6570	200	8920	286324	100546	13320	427489	150487
			100	6330	202424	71248	9270	302305	106539
			50	4475	143162	50406	6675	213744	75243
			20	2830	90558	31962	4220	135172	47676
			10	1995	64256	22573	2985	95885	33693
			2.5	995	32095	11320	1485	47876	16847

© 2003 by Béla Lipták

TABLE 2.15t Continued
*Orifice Flowmeter Capacity Table**

				Flange and Vena Contracta Taps			Pipe Taps		
				Liquid	*Steam*	*Gas*	*Liquid*	*Steam*	*Gas*
Pipe Size	*Actual Inside Diam. (I.D.) Sched. 40*	*Maximum Orifice Diam.*	*Meter Range*	*Water (SG = 1)*	*100 PSIG Saturated*	*Air (SG = 1.0) @ 100 PSIG and 60°F*	*Water (SG = 1)*	*100 PSIG Saturated*	*Air (SG = 1.0) @ 100 PSIG and 60°F*
Inches	*Inches*	*Inches*	*Inches of Water*	*Gal./Min.*	*Lb./Hr.*	*Std. Cu. Ft/Min.*	*Gal./Min.*	*Lb./Hr.*	*Std. Cu. Ft./Min.*
20	18.814	14.1105	200	11100	356238	125097	16550	531871	187232
			100	7870	251352	88645	11720	376121	132554
			50	5565	178119	62714	8310	265936	93616
			20	3520	112671	39766	5250	168177	59318
			10	2485	79946	28085	3715	119298	41920
			2.5	1240	39932	14084	1850	59566	20960
24	22.626	16.9695	200	16060	515222	180927	23950	769238	270791
			100	11375	364250	128206	16960	543978	191710
			50	8035	257611	90703	12000	384619	135395
			20	5090	162954	57513	7585	243233	85790
			10	3590	115625	40619	5375	172539	60628
			2.5	1795	57753	20369	2675	86150	30314

*Reproduced by permission of Taylor Instrument Co. (ABB Kent-Taylor).

where
E = area factor, determined from curve C on Figure 2.15s
R = pipe constant, determined from table on Figure 2.15s
G = specific gravity of gas (air = 1.0)
G_f = specific gravity of liquid at operating temperature
G_t = specific gravity of liquid at 60°F (15.6°C)
h = pressure differential across orifice in inches H_2O
Y = compressibility factor, determined from curve B in Figure 2.15s
V = specific volume (ft^3/lbm), determined from steam tables provided in the Appendix
T_f = flowing temperature expressed in °R (°F +460)
P_f = flowing pressure in PSIA
X = pressure loss ratio defined as $h/2P_f$

A useful simplified form of the mass flow equation [Equation 2.15(3)] is

$$W = 359\ Cd^2\sqrt{\frac{h\rho}{1-\beta^4}} \qquad \textbf{2.15(8)}$$

where
W = mass flow in lb/h
d = orifice diameter in inches
h = differential pressure in inches of water; water density assumed to be 62.32 lb/ft^3, corresponding to 68°F (20°C)
ρ = operating density in lb/ft^3
β = ratio of orifice diameter to pipe diameter in pure number
C = coefficient of discharge in pure number

This is a modification of the basic equation for mass flow [Equation 2.15(3)] substituting the 359 $Cd^2\sqrt{1-\beta^4}$ for kA. The constant 359 includes a factor for the chosen units of measurement. The coefficient of discharge is involved with the flow pattern established by the orifice, including the vena contracta and its relation to the differential-pressure measurement taps. An average value of $C = 0.607$ can be used for flange and other close-up taps, which gives working equation

$$W = 218d^2\sqrt{\frac{h\rho}{1-\beta^4}} \qquad \textbf{2.15(9)}$$

For full flow taps, $C = 0.715$, and the equation becomes

$$W = 275d^2\sqrt{\frac{h\rho}{1-\beta^4}} \qquad \textbf{2.15(10)}$$

These working equations can be used for approximate calculations of the flow of liquids, vapors, and gases through any type of sharp-edged orifice. When using orifices for measurement in weight units, errors in determination of ρ must be considered. (Refer to Chapter 6 for density measurement and sensors.) Accurate determination of density under flowing conditions is difficult, particularly for gases and vapors. In some cases, even liquids are subject to density changes with both temperature *and* pressure (for example, pure water in high-pressure boiler feedwater measurement).

© 2003 by Béla Lipták

For W, d, h, and ρ given in dimensions other than those stated, simple conversion factors apply. Transfer of ρ in Equations 2.15(8) through 2.15(10) from the numerator to denominator will give volume flow in actual cubic feet per hour at flowing conditions [see Equations 2.15(2) and 2.15(3)].

Beta ratio, and hence orifice diameter, can be calculated from a transposed form of the mass flow Equation 2.15(8).

ORIFICE ACCURACY

If the purpose of flow measurement is not absolute accuracy but only repeatable performance, then the accuracy in calculating the bore diameter is not critical, and approximate calculations will suffice. On the other hand, if the measurement is going to be the basis for the sale of, for example, valuable fluids or of large quantities of natural gas transported in high-pressure gas lines, absolute accuracy is essential, and precision in the bore calculations is critical.

Some engineers believe that, instead of individually sizing each orifice plate, bore diameters should be standardized.[6] This approach would make it practical to keep spare orifices on hand in all standard sizes. This approach seems reasonable, because the introduction of the microprocessor-based DCS systems means it is no longer important to have round figures for the full-scale flow ranges. If this approach to orifice sizing were adopted, the orifice bore diameters and d/p cell ranges would be standardized, round values, and the corresponding maximum flow would be an uneven number that corresponds to them.

If orifice bore diameters are selected from standardized sizes, the actual bore diameter required can be calculated, as is normally done, and the next size from the standard sizes (available in 0.125-in. diameter increments) can be selected. The use of this approach is practical and, although it results in an "oddball" full flow value, that is no problem for our computing equipment.

In the past, to increase flow rangeability, the natural gas pipeline transport stations used a number of parallel runs (Figure 2.15u). In these systems, the flow rangeability of the individual orifices was minimized by opening up another parallel path if the flow exceeded about 90% of full-scale flow (of the active paths) or by closing down a path when the flow in the active paths dropped to a selected low limit, such as 80%. By so limiting the rangeability, metering accuracy was kept high, but at the substantial investment of adding piping, metering hardware, and logic controls for the opening and closing of runs.

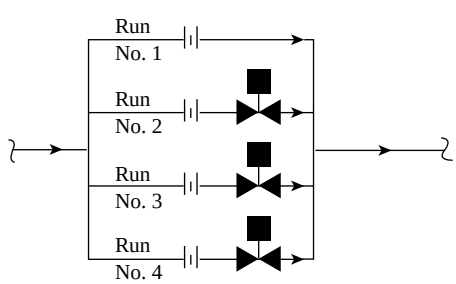

FIG. 2.15u

Metering accuracy can be maximized by keeping the flow through the active runs between 80% and 90% of full scale.[8]

Another, less expensive, choice was to use two (or more) transmitters, one for high (10 to 100%) pressure drop and the other for low (1 to 10%), and to switch their outputs depending on the actual flow. This doubled the transmitter hardware cost and added some logic expense at the receiver, but it increased the rangeability of orifice flowmeters to about 10:1.

As smart d/p transmitters with 0.1% of span error became available, another relatively inexpensive option became obtainable: the dual-span transmitter. Some smart d/p transmitters are currently available with 0.1% of span accuracy, and their spans can be automatically switched by the DCS system, based on the value of measurement.[7] Therefore, a 100:1 pressure differential range (10:1 flow range) can be obtained by automatically switching between a high (10 to 100%) and a low (1 to 10%) pressure differential span. As the transmitter accuracy at both the high and low flow condition is *0.1% of the actual span*, the overall result can be a 1% of actual flow accuracy over a 10:1 flow range.

Where the ultimate in accuracy is required, actual flow calibration of the meter run (the orifice, assembled with the upstream and downstream pipe, including straightening vanes, if any) is recommended. Facilities are available for very accurate weighed water calibrations, in lines up to 24 in. (61 cm) diameter and larger, and with a wide range of Reynolds numbers. For orifice meters, highly reliable data exists for accurate transfer of coefficient values for liquid, vapor, and gas measurement.

References

1. Miller, R. W., *Flow Measurement Handbook*, 3rd ed., McGraw-Hill, New York, 1996.
2. ASME, Fluid Meters, Their Theory and Application, Report of ASME Research Committee on Fluid Meters, American Society of Mechanical Engineers, New York.
3. *Shell Flow Meter Engineering Handbook*, Royal Dutch/Shell Group, Delft, The Netherlands, Waltman Publishing Co., 1968.
4. American Gas Association, *AGA Gas Measurement Manual*, American Gas Association, New York.
5. Miller, O. W. and Kneisel, O., Experimental Study of the Effects of Orifice Plate Eccentricity on Flow Coefficients, ASME Paper Number 68-WA/FM-1, 10, Conclusions 3, 4, 5, American Society of Mechanical Engineers, New York.
6. Ahmad, F., A case for standardizing orifice bore diameters, *InTech*, January 1987.
7. Rudbäck, S., Optimization of orifice plates, venturies and nozzles, *Meas. Control*, June 1991.

© 2003 by Béla Lipták

8. Lipták, B. G., Applying gas flow computers, *Chem. Eng.*, December 1970.
9. Measurement of Fluid Flow in Pipes, Using Orifice, Nozzle, and Venturi, ASME MFC-3M, December 1983.
10. Measurement of Fluid Flow by Means of Pressure Differential Devices, ISO 5167, 1991, Amendment in 1998.
11. *Flow Measurement Practical Guide Series*, 2nd ed., D. W. Spitzer, Ed., ISA, Research Triangle Park, NC.
12. API, Orifice Metering of Natural Gas, American Gas Association, Report No. 3, American Petroleum Institute, API 14.3, Gas Processors Association GPA 8185–90.
13. Reader-Harris, M. J. and Saterry, J. A., The orifice discharge coefficient equation, *Flow Meas. Instrum.*, 1, January 1990.
14. Reader-Harris, M. J., Saterry, J. A. and Spearman, E. P., The orifice plate discharge coefficient equation—further work, *Flow Meas. Instrum.*, 6(2), Elsevier Science, 1995.
15. Reader-Harris, M. J. and Saterry, J. A., The Orifice Plate Discharge Equation for ISO 5167–1, Paper 24 of North Sea Flow Measurement Workshop, 1996.

Bibliography

AGA/ASME, The flow of water through orifices, Ohio State University, *Student Eng. Ser. Bull*. 89, IV(3).

Ahmad, F., A case for standardizing orifice bore diameters, *InTech*, January 1987.

American Gas Association, Report No. 3, Orifice Metering of Natural Gas, 1985.

ANSI/API 2530, Orifice metering of natural gas, *ANSI*, New York, 1978.

ANSI/ASME MFC, Differential Producers Used for the Measurement of Fluid Flow in Pipes (Orifice, Nozzle, Venturi), ANSI, New York, December 1983.

ASME, The ASME-OSI Orifice Equation, *Mech. Eng.*, 103(7), 1981.

BBI Standard 1042, Methods for the Measurement of Fluid Flow in Pipes, Orifice Plates, Nozzles and Venturi Tubes, British Standard Institution, London, 1964.

Differential pressure flowmeters, *Meas. Control*, September 1991.

Kendall, K., Orifice Flow, *Instrum. Control Syst.*, December 1964.

Sauer, H. J., Metering pulsating flow in orifice installations, *InTech*, March 1969.

Shichman, D., Tap location for segmental orifices, *Instrum. Control Syst.*, April 1962.

Starrett, P. S., Nottage, H. B. and Halfpenny, P. F., Survey of Information Concerning the Effects of Nonstandard Approach Conditions upon Orifice and Venturi Meters, presented at the annual meeting of the ASME, Chicago, November 7–11, 1965.

Stichweh, L., Gas purged DP transmitters, *InTech*, November 1992.

Stoll, H. W., Determination of Orifice Throat Diameters, Taylor Technical Data Sheets TDS-4H603.

© 2003 by Béla Lipták

2.16 Pitot Tubes and Area Averaging Units

W. H. HOWE (1969) **J. O. HOUGHEN** (1982)
B. G. LIPTÁK, M. PTÁCNÁK (1995) **B. G. LIPTÁK** (2003)

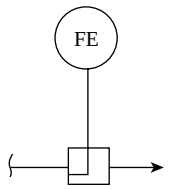

Flow Sheet Symbol

Types	A. Standard, single-ported B. Multiple-opening, averaging C. Area averaging for ducts
Applications	Liquids, gases, and steam
Operating Pressure	Permanently installed carbon or stainless-steel units can operate at up to 1400 PSIG (97 bars) at 100°F (38°C) or 800 PSIG (55 bars) at approximately 700°F (371°C); pressure rating of retractable units is function of the ratings of the isolating value
Operating Temperature	For permanent installations, up to 750°F (399°C) in steel and up to 850°F (454°C) in stainless-steel construction
Flow Ranges	Can be used in pipes or ducts in sizes 2 in. (50 mm) or larger; no upper limit
Materials of Construction	Brass, steel, stainless steel
Minimum Reynolds Number	In the range of 20,000 to 50,000
Rangeability	Usually limited to 3:1
Straight-Run Requirements	Twenty-five to 30 pipe diameters upstream and 5 downstream are required if the pitot sensor is located downstream of a valve or of two elbows in different planes; if straightening vanes are provided, this requirement is reduced to 10 pipe diameters upstream and 5 downstream
Inaccuracy	For standard industrial units: 0.5 to 5% of full scale. Industrial pitot venturies must be individually calibrated to obtain 1% of range performance. Full-traversing pitot venturies under laboratory conditions meeting the National Bureau of Standards can limit the error to 0.5% of actual flow. Inaccuracies of individually calibrated multiple-opening averaging pitot tubes, when Reynolds numbers exceed 50,000, are 2% of range. The errors of area-averaging duct units are claimed to be between 0.5 and 2% of span. The errors listed above do not include that of the d/p cell, which is additional.
Costs	The cost of the pitot tube itself in case of a 1-in. dia. averaging tube in stainless-steel materials is $800 if fixed and $1500 if retractable for hot-tap installation. Hastelloy® units for smokestack applications can cost $2000 or more. A local pitot indicator cost $500; a d/p transmitter suited for pitot applications costs about $1,500. Calibration costs are additional and can amount to $1000/tube.
Partial List of Suppliers	ABB Automation Instrumentation (www.abb.com/us/instrumentation) (A) Air Monitor Corp. (www.airmonitor.com) (C) Alnor Instrument Co. (www.alnor.com) (A) Blue White Industries (www.bluwhite.com) (A) Brandt Instruments (www.brandt.com) (C) Dietrich Standard (www.annubar.com) (Annubar—B) Dwyer Instruments Inc. (www.dwyer-inst.com) (B)

© 2003 by Béla Lipták

The Foxboro Co. (www.foxboro.com) (pitot venturi—A)
Kobold Instruments Inc. (www.koboldusa.com) (B)
Meriam Instrument (www.meriam.com) (B)
Mid-West Instrument (www.midwestinstrument.com) (delta tube—B)
United Electric Controls Co. (www.ueonline.com) (A)

For the measurement of the velocities of fluids, in 1732, Henri de Pitot invented the pitot tube. Pitot tubes detect the flowing velocity at a single point (standard), at several points that lead into an averaging probe (multiported), or at many points across the cross section of a pipe or duct (area-averaging). Their advantages are low cost, low permanent pressure loss, and the capability of inserting the probe-type sensors into the process pipes while the system is under pressure (wet- or hot-tapping). The disadvantages of pitot tube-type sensors are low accuracy, low rangeability, and the limitation of being suitable only for clean liquid, gas, or vapor service unless purged.

THEORY OF OPERATION

The impact pressure on a body, which is immersed in a moving fluid is the sum of the static pressure and the dynamic pressure. Thus,

$$P_t = P + P_v \qquad \textbf{2.16(1)}$$

where
P_t = total pressure, which can be sensed by a fixed probe when the fluid at the sensing point is in an isentropic state (constant entropy)
P = static pressure of the fluid whether in motion or at rest
P_v = dynamic pressure caused by the kinetic energy of the fluid as a continuum

With respect to the energy relation at the isentropic stagnation point of an ideal probe,

$$\int_P^{P_t} \frac{dp}{\rho} = \int_o^{v_p} \frac{v_p\, dv}{g_c} \qquad \textbf{2.16(2)}$$

where
v_p = approach velocity at the probe location
ρ = fluid density
g_c = a constant

For a liquid of constant density, integration yields, at a point,

$$(P_t - P) = P_v = \frac{Pv_p^2}{2g_c} \qquad \textbf{2.16(3)}$$

For a compressible perfect gas for which $\frac{p}{\rho\gamma}$ remains constant during an isentropic change, a similar relation emerges.

$$(P_t - P) = P_v = \rho \frac{(\gamma - 1)}{\gamma} \frac{v_p^2}{2g_c} \qquad \textbf{2.16(4)}$$

where γ = ratio of specific heats.

Assuming isentropic stagnation at the sensing point of the probe,

$$\int_P^{P_t} \frac{dp}{\rho} = \int_o^{v_p} \frac{V_p dV}{g_c} \qquad \textbf{2.16(5)}$$

where, using English units,
V_p = velocity of approach, ft/s
P = pressure, lbf/ft^2
ρ = fluid density, lbm/ft^3
$g_c = 32.2 \frac{\text{lbm}}{\text{lbf}} \frac{\text{ft}}{\text{s}^2}$

If density is constant, integration yields

$$(P_t - P) = P_v = \frac{p\left(V_p^2\right)}{2g_c} \qquad \textbf{2.16(6)}$$

For a compressible perfect gas, the ratio $\frac{P}{\rho\gamma}$ remains constant during an isentropic change, and a similar relation is obtained.

$$(P_t - P) = P_v = \frac{(\gamma - 1)}{\gamma} \frac{\rho\left(V_p^2\right)}{g_c} \qquad \textbf{2.16(7)}$$

where γ is the ratio of specific heats.

To compute the fluid velocity at a particular point, it is necessary to measure the values of both the static pressure

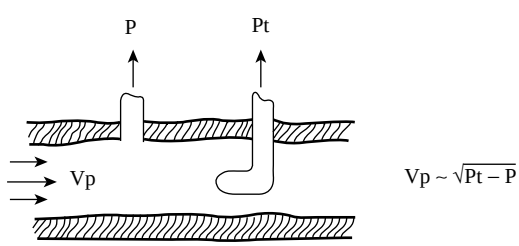

FIG. 2.16a
The velocity at a point (in the turbulent flow range) is related to the square root of the pressure difference between total and static pressures.

© 2003 by Béla Lipták

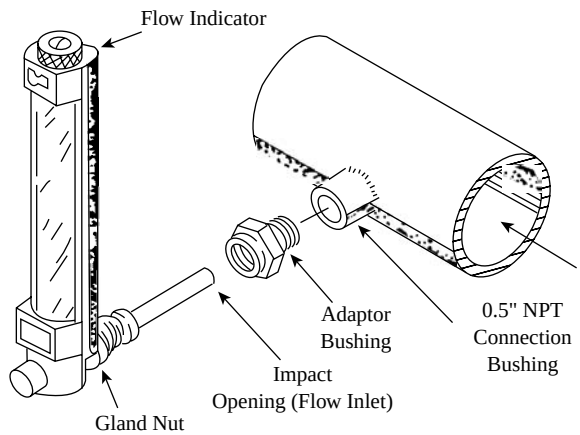

FIG. 2.16b
Pitot rotameter with bypass flow entering through impact opening (facing flow) and leaving through static port on opposite side (not shown). (Courtesy of ABB Instruments, formerly Fischer & Porter Co.)

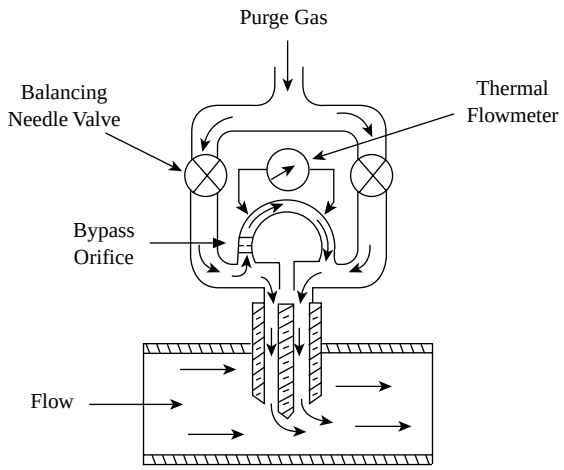

FIG. 2.16c
Pitot-tube rangeability can be increased by replacing the d/p cell detector with a thermal flowmeter.

(P) and the total pressure (P_t) at that point (Figure 2.16a), whence

$$V_P = C\frac{(P_t - P)^{0.5}}{\rho} \qquad \textbf{2.16(8)}$$

where C = a dimensional constant.

PRESSURE DIFFERENTIAL PRODUCED

One of the problems with pitot tubes is that they do not generate strong output signals. The d/p cells available are discussed in Chapter 5, under "Pressure Measurement." The minimum span of a "smart" d/p cell is 0 to 2 in. of H_2O (0 to 0.5 kPa). These smart d/p cell units are accurate up to 0.1% of actual span. For narrower differentials, down to 0 to 0.1 in. H_2O (0 to 25 Pa), the membrane-type d/p cells can be used.

In addition to using d/p cells, one can also install elastic element or manometer-type readout devices, variable-area flowmeters (Figure 2.16b), or thermal flowmeters (Figure 2.16c) as pitot tube detectors. The thermal detector gives the highest rangeability, but it can be used only if the pitot tube is purged.

STATIC PRESSURE MEASUREMENT

In process fluids flowing through pipes or ducts, the static pressure is commonly measured in one of three ways: (1) through taps in the wall, (2) by static probes inserted into the fluid stream, or (3) by small apertures located on an aerodynamic body immersed in the flowing fluid.

The data of Shaw[1] (presented by Benedict[2]) show that errors in the measurement of static pressure are minimal for velocities up to 200 ft/s (60 m/s) if the wall tap dimensions conform to those in Figure 2.16d, where the tap diameter (d) is 0.0635 in., the sensing tube ID ≅ 2d, and the tap length-to-diameter ratio (l/d) is $1.5 < l/d < 6$.

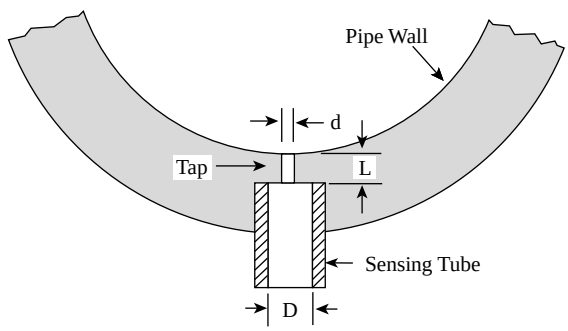

FIG. 2.16d
Wall tap for static pressure measurement.

Static pressure errors also depend on fluid viscosity, fluid velocity, and whether the fluid is compressible. Shaw[1] states that, for incompressible fluids flowing in a circular conduit with a pipe Reynolds number of 2×10^5, an error of about 1% of the mean dynamic pressure may occur using a wall tap with a diameter 1/10th that of the pipe. Rayle[3] mentions that a tap diameter of 0.03 in. (0.75 mm) with a conical countersink 0.015 in. (0.34 mm) deep will ensure nearly true static pressure sensing.

Static pressure may also be sensed through a tube inserted into the moving fluid. One configuration is shown in Figure 2.16e.

Other static probe designs are also described in the literature.[2] The aerodynamic probe is a bluff body inserted into the flowing fluid with appropriately located holes on its surface through which pressure signals are obtained. The probe is oriented so that the sensed pressure is a measure of the static pressure. Two configurations taken from Benedict,[2] the cylinder and the wedge, are shown in Figure 2.16f. The probes are rotated until the pressure sensed from each hole is the same or, alternatively, the two taps may be manifolded to obtain an averaged pressure.

© 2003 by Béla Lipták

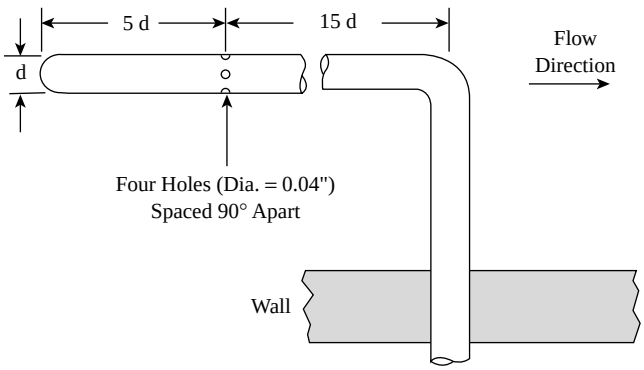

FIG. 2.16e
Typical static pressure-sensing probe.

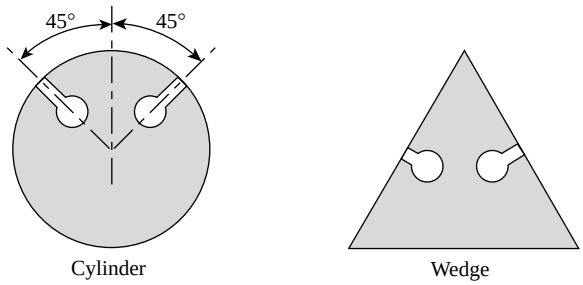

FIG. 2.16f
Two shapes of aerodynamic probes used to sense static pressure.

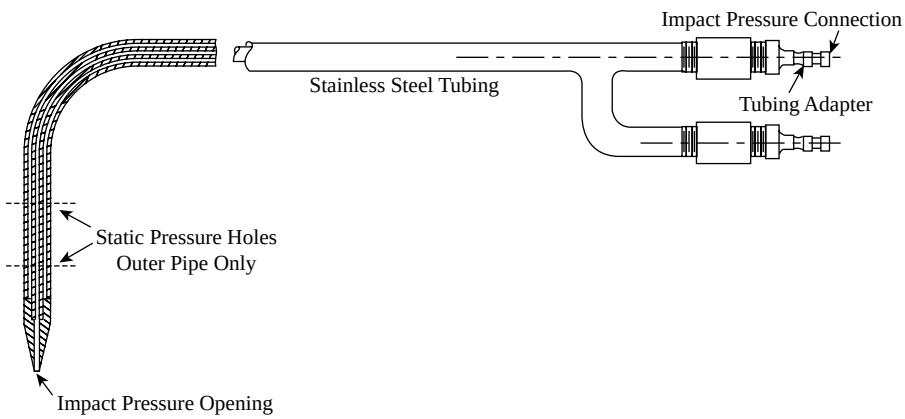

FIG. 2.16g
Typical pitot tube.

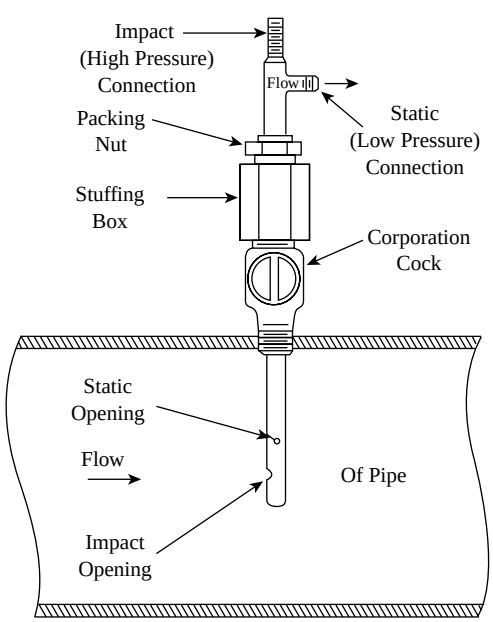

FIG. 2.16h
Schematic of an industrial device for sensing static and dynamic pressures in a flowing fluid.

The total pressure develops at the point where the flow is isentropically stagnated, which is assumed to occur at the tip of a pitot tube or at a specific point on a bluff body immersed in the stream. Figure 2.16g illustrates a typical pitot tube, also showing the taps for sensing static pressure. Another variation is shown in Figure 2.16h.

SINGLE-PORTED PITOT TUBE

Pitot tubes are sensitive to flow direction and must be carefully aligned to face into the flow. This can be difficult if the flow direction is caused to vary by changes in turbulence. The pitot tube is made less sensitive to flow direction if the impact aperture has an internal bevel of about 15° extending about 1.5 diameters into the tube. The characteristics of various designs and orientations are discussed in Benedict.[2] Figure 2.16i illustrates the typical performance of a pitot tube.

Pitot venturi and double-venturi elements have been developed to amplify the pressure signals generated by the in-stream velocity sensors, as shown in Figures 2.16j and 2.16k. These elements are intended to remain in a fixed position, so their measurements must be converted to flow rate through calibration, which accounts for the properties of

© 2003 by Béla Lipták

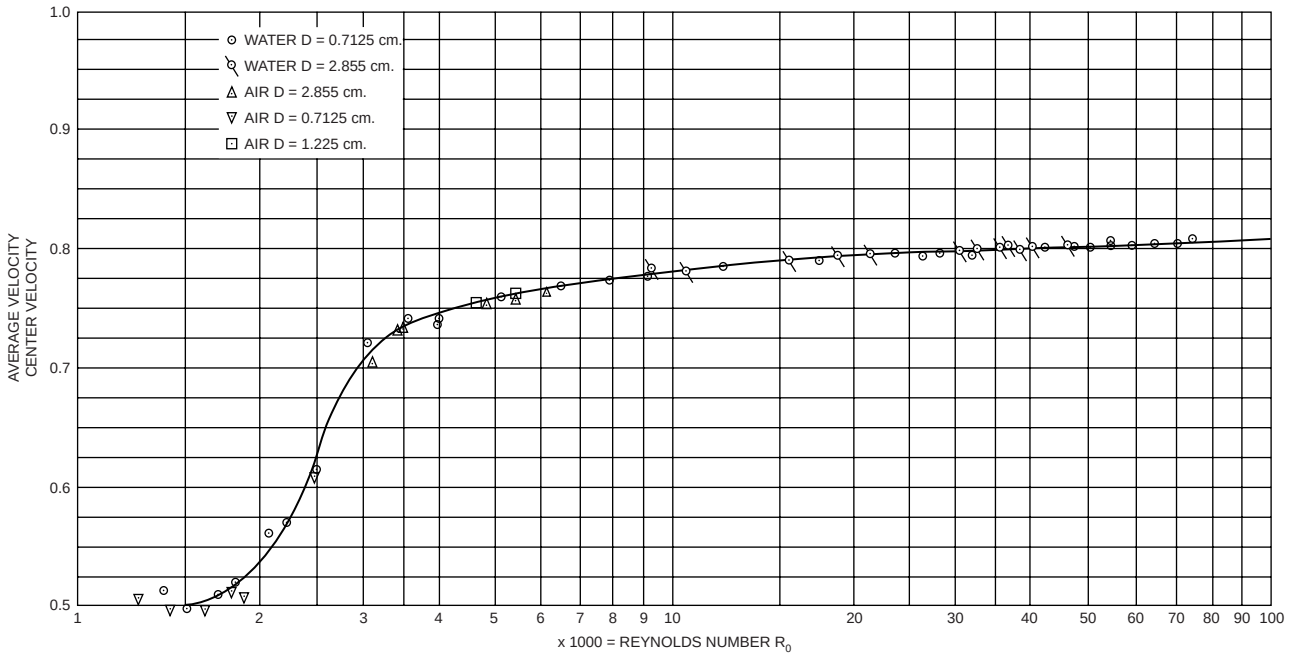

FIG. 2.16i
Center to average velocity ratios in straight and smooth pipes.[7]

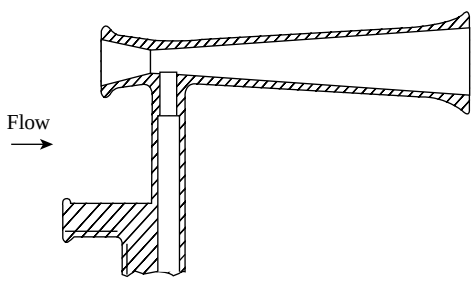

FIG. 2.16j
A pitot venturi produces a higher differential pressure than the standard pitot tube.

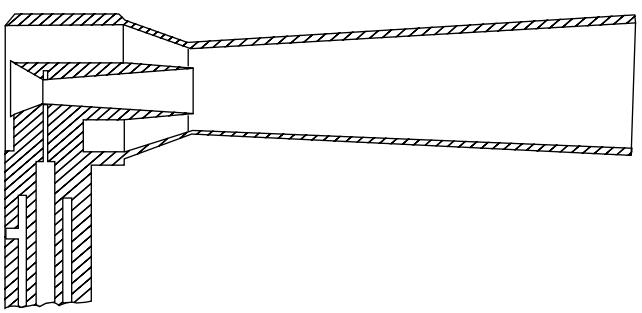

FIG. 2.16k
The double venturi produces a higher differential pressure than the standard pitot tube. (Courtesy of The Foxboro Co.)

the fluid and the velocity profile (e.g., Reynolds number). To obtain a stable velocity profile, it is recommended that a smooth, straight section of pipe, of a length equaling at least 10 to 15 pipe diameters, be provided both upstream and downstream of the probe.

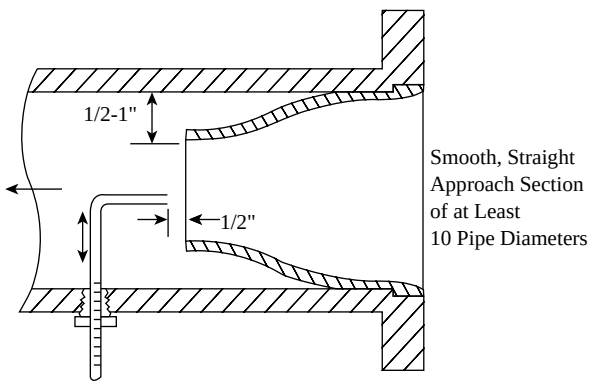

FIG. 2.16l
Reduction nozzle used to expedite velocity traverses.

To determine the average velocity in a pipe, it is necessary to traverse it with a pitot tube. For circular pipes, such an average is obtained from measurements of $(P_t - P)$ on each side of the cross section at the following locations, expressed in percentage of the diameter measured from the center:

$$\left(\sqrt{\frac{2n-1}{N}}\right)\times 100\%, \quad \left(n=1,2,3K\frac{N}{2}\right) \qquad \textbf{2.16(9)}$$

where N is the number of measurements per traverse. Two measurements normal to each other are recommended.

To improve the measurements made near the walls of pipes that are more than 6 in. (150 mm) in diameter, a reduction nozzle is inserted into the pipeline (Figure 2.16l).

© 2003 by Béla Lipták

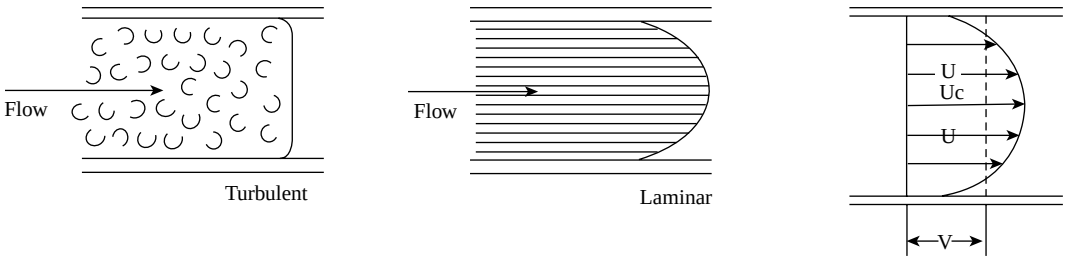

FIG. 2.16m
The velocity profile becomes flatter as the Reynolds number rises (the flow becomes more turbulent), and the task of the pitot-type flow sensor is to find the insertion depth corresponding to the average velocity (V).

Calibration of Pitot Tubes

In high-precision laboratory tests, the pitot tube is traversed across the cross-section of the pipe, thereby establishing the velocity profile that exists in the pipe. In industrial applications, the pitot tube is fixed and measures the flow velocity only at one point on the velocity profile (Figure 2.16m). If the velocity (U) measured by this fixed pitot tube is not the average velocity (V), a substantial error will result. This error cannot be easily eliminated because, even if the pitot tube insertion is carefully set to measure the average velocity V under one set of flow conditions, it will still be incorrect as soon as the flow velocity changes. At Reynolds numbers under 1000 (in the fully laminar region), the ratio between the average velocity and the center velocity is 0.5 (V/U_c = 0.5 in Figure 2.16m). In fully developed turbulent flow (Re = 50,000 or more), this same ratio is about 0.81(V/U_c = 0.8).

Unfortunately, the velocity profile is affected not only by the Reynolds number but also by the pipe surface roughness and by upstream valves, elbows, and other fittings. To reform the velocity profile, it is recommended to provide a straight pipe length of about 25 pipe diameters between the upstream disturbances and the pitot element.

If the data for calculating the Reynolds number is available, and if the pitot tube is installed in a pipe with smooth inner surface, it should be possible to design a microprocessor-based *smart pitot tube* that measures only the center velocity (U_c) and, based on that reading, accurately calculates the flow under all flow conditions.

The National Bureau of Standards calibrates pitot tubes by mounting them on a carriage, which is drawn through stagnant air at a known velocity. Smoke is introduced into the room to verify that the air is stagnant—that there is no turbulence. Such tests have shown that pitot tubes with coefficients very close to unity can be designed. Devices such as pitot-venturies or double venturies can provide flow rate measurements with less than 1% error, but only after extensive *in situ* calibration for each installation.

MULTIPLE-OPENING PITOT TUBES

One approach in attempting to overcome the inherent limitation of the pitot tube—that of being a point velocity sensor—was to measure the velocities at several points and average these

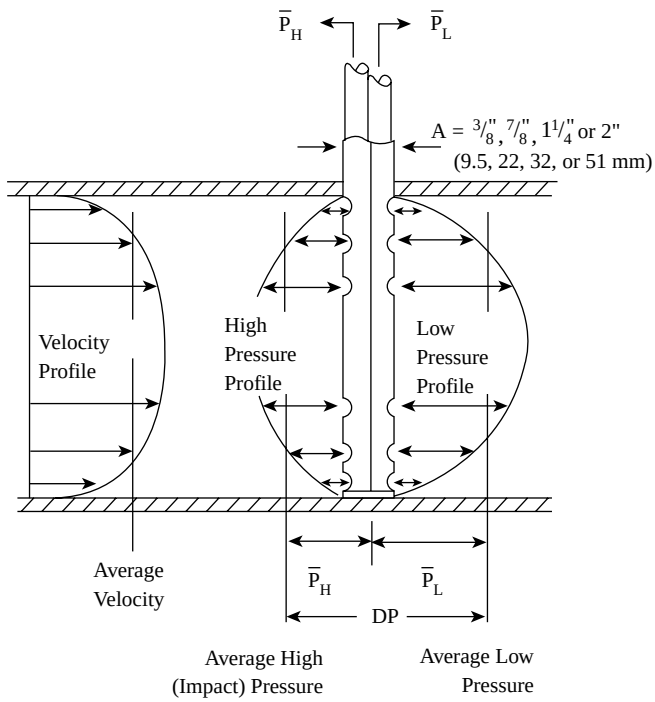

FIG. 2.16n
The design of a particular averaging pitot tube. (Courtesy of Dietrich Standard.)

readings. It was argued that, by averaging the velocities measured at four fixed points, for example (see Figure 2.16n), changes in the velocity profile will be detected, and therefore the reading of a multiple-opening pitot tube will be more accurate than that of single-point sensors.

The manufacturers of averaging pitot tubes usually claim that the flow coefficient (K) will stay within 2% between the Reynolds numbers of 50,000 and 1,000,000. This is probably so, but it might not be attributable to averaging action but rather to the fact that, in this highly turbulent region, the velocity profile is flat and changes very little.

Critics of this device argue that it offers little improvement over the single-opening pitot tube, because it is ineffective at Reynolds numbers below 50,000. This means that it is not applicable for the measurement of a large portion of industrial liquid flows. The other argument made by critics is that the averaging pitot tube openings are too large and,

© 2003 by Béla Lipták

consequently, these devices are not true averaging chambers; rather, the sensed pressure is dominated by the pressure at the nearest port. For these reasons, further testing by independent laboratories is still needed.

The reason for making the ports of the averaging pitot tubes so large is to prevent plugging. Some manufacturers of area-averaging pitot tubes do overcome this limitation by purging, because the small port openings are kept clean by the purge gas, and these units can act as true averaging chambers. Naturally, they can be used only on processes in which the introduction of a purge media is acceptable.

One advantage of the averaging pitot tubes that both its manufacturers and its critics agree on is their ability to be installed into operating, pressurized pipelines. This hot-tapping capability, and the ability to remove the sensor without requiring a shutdown, are important advantages of all probe-type instruments (Figure 2.16o).

In calculating the pressure differential produced by an averaging pitot tube, one might use the equations listed in Table 2.16p. For the metric equivalents of the units used in this table, refer to the Appendix. The flow coefficient (K) of the pitot tube varies with its design. The K values of the averaging pitot tube shown in Figure 2.16n are listed in Table 2.16q. The distance "A" used in Table 2.16q is also defined in Figure 2.16n.

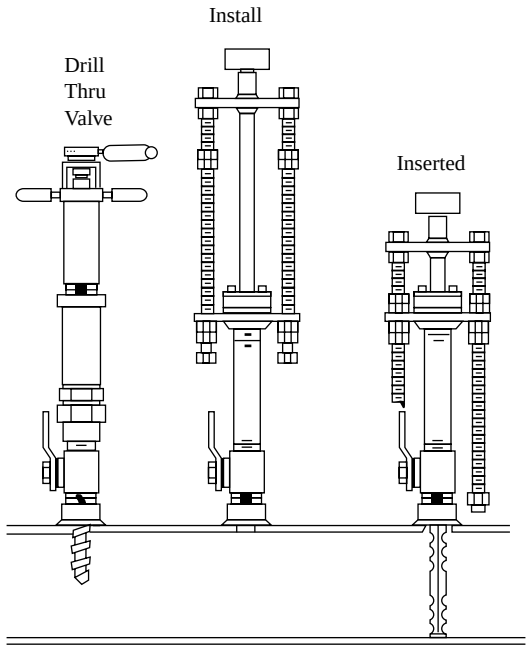

FIG. 2.16o
The hot-tap installation of an averaging pitot tube involves the same steps, which are required in installing all "retractable" probe-type instruments. (Courtesy of Dietrich Standard.)

AREA-AVERAGING PITOT STATIONS

Area-averaging pitot stations have been designed for the measurement of large flows of low-pressure gases. Measurements include the flow rate of combustion air to boilers, airflow to dryers, and air movement in HVAC systems. These units are available with circular or rectangular cross sections (Figures 2.16r and 2.16s) and can be mounted in the suction or discharge of fans or in any other large pipes or ducts. These stations are designed so that one total pressure detection port and one static pressure sensing port are located in each unit area of the cross section of the duct, and they each are

TABLE 2.16p
*Equations for Calculation of the Pressure Differential Produced by the Averaging Pitot Tube Described in Figure 2.16n**

Liquid, gas, steam (mass rate of flow) $h_w = \left(\frac{1}{\rho_f}\right)\left(\frac{lb_m/hr}{358.94KD^2}\right)^2$	h_w = differential pressure, inches of water at 68°F K = flow coefficient D = internal pipe diameter, inches lb_m/hr = pounds mass per hour
Liquid (volume rate of flow) $h_w = (G_f)\left(\frac{GPM}{5.666KD^2}\right)^2$	GPM = U.S. gallons per minute ACFH = Actual cubic feet per hour SCFH = Standard cubic feet per hour (at 14.73 psia and 60°F)
Gas (standard volumetric flow) $h_w = \left(\frac{T_f G}{p_f}\right)\left(\frac{SCFH}{7{,}711KD^2}\right)^2$	ρ_f = flowing density, lb_m/ft^3 for gas: $\rho_f = \frac{p_f}{14.73} \times \frac{520}{T_f} \times .076487 \times G$
Gas (actual volume rate of flow) $h_w = (\rho_f)\left(\frac{ACFH}{358.94KD^2}\right)$	.076487 lb_m/ft^3 = air density at 14.73 psia and 60°F G_f = specific gravity of liquid G = specific gravity of gas (molecular weight of air = 28.9644) T_f = temperature of flowing gas in degress Rankine (°R = °F + 460) P_f = flowing pressure, psia

* Courtesy of Dietrich Standard.

© 2003 by Béla Lipták

TABLE 2.16q

*The Flow Coefficient K for the Averaging Pitot Tube Shown in Figure 2.16n Having the "A" Dimension Also Defined in That Figure**

Paper Size			*Flow Coefficient-K*			
Size/Sch	*D-in*	*D-mm*	*A = 3/8"*	*A = 7/8"*	*A = 1 1/4"*	*A = 2"*
2" sch 40	2.067	52.50	5912			
2 1/2" sch 40	2.469	62.71	.6026			
3" sch 40	3.068	77.93	.6134			
3 1/2" sch 40	3.548	90.12	.6192			
4" sch 40	4.026	102.26	.6235			
5" sch 40	5.047	128.19	.6297	.5934		
6" sch 40	6.065	154.05		.6047		
8" sch 40	7.981	202.72		.6173		
10" sch 40	10.020	254.51		.6250		
12" sch std.	12.000	304.80		.6298	.6186	
14" sch std.	13.250	336.55		.6321	.6220	
16" sch std.	15.250	387.35		.6349	.6263	
18" sch std.	17.250	438.15		.6370	.6296	
20" sch std.	19.250	488.95		.6387	.6321	
24" sch std.	23.250	590.55		.6411	.6357	.6247
30" sch std.	29.250	742.95		.6435	.6393	.6308
36" sch std.	35.250	895.35		.6450	.6416	.6346
42" sch std.	41.250	1047.7		.6461	.6432	.6373
48"	48.00	1219.20			.6445	.6395
60"	60.00	1524.0			.6461	.6422
72"	72.00	1828.80			.6472	.6439

*Courtesy of Dietrich Standard.

connected to their own manifold. The manifolds act as averaging chambers, and they are also purged to protect the sensing ports from plugging.

The straight-run requirement of these units is reduced by the addition of a hexagon-cell-type flow straightener and a flow nozzle in front of the area-averaging flow sensor. This nozzle also serves to amplify the differential pressure produced by the unit (Figure 2.16s). According to the manufacturer, this design (Figure 2.16s) reduces the straight-run requirement of most installations to a range of 0 and 10 diameters. The longest straight run (10 diameters) is recommended when the flow meter is installed downstream of a butterfly valve or a damper.

Because these area-averaging pitot stations generate very small pressure differentials, special d/p cells are required to detect these minute signals. One such detector is the membrane-type design (Fig. 2.16t), which can have a span as small as 0 to 0.01 in. H_2O (to 2.5 Pa). When such extremely small pressure differentials are detected, the pressure drop in the tubing between the d/p cell and the pitot station must

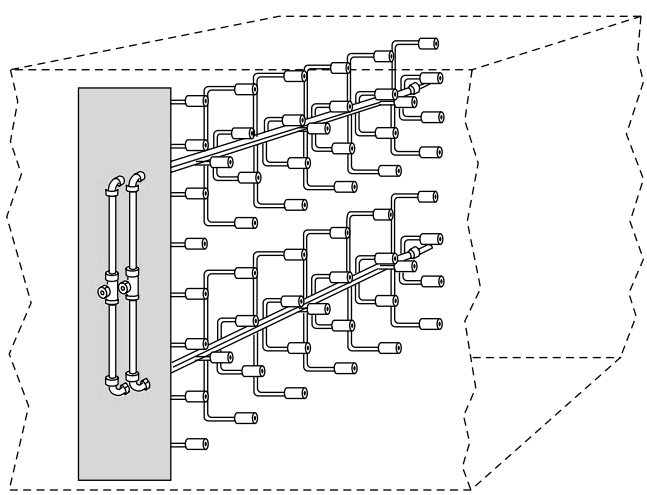

FIG. 2.16r

Installation in rectangular duct of area-averaging pitot tube ensembles for metering the flow rate of gases. (Courtesy of Air Monitor Corp.)

© 2003 by Béla Lipták

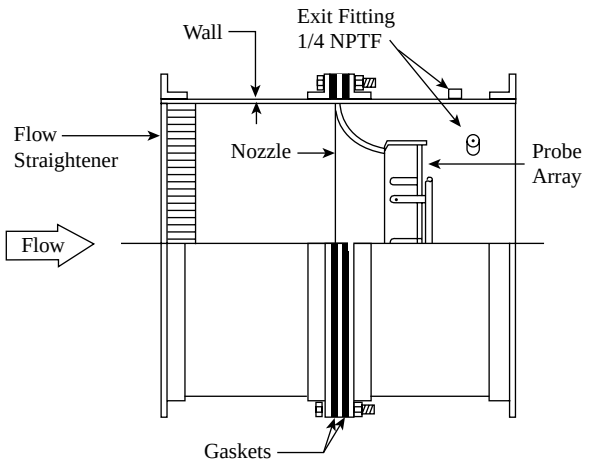

FIG. 2.16s
The flow straightener and the nozzle serve to reduce the upstream straight pipe-run requirement and increase the pressure differential generated. (Courtesy of Brandt Instruments.)

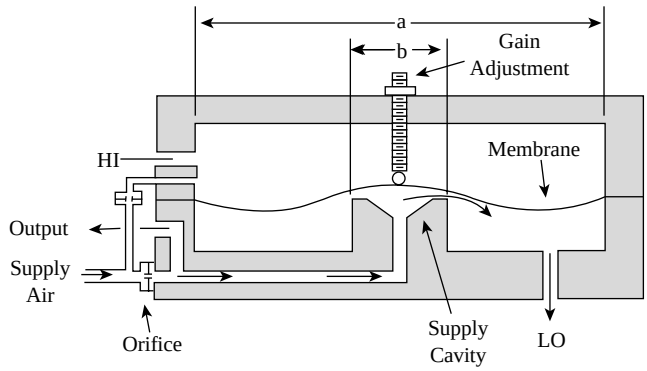

FIG. 2.16t
Membrane type d/p transmitter.

be minimized. This is achieved by making the connecting tubes short and large in diameter. The pressure differential generated by the flow element shown in Figure 2.16s can be calculated by using the equations in Table 2.16u. For the equivalent SI units for use in these equations, refer to the Appendix.

SPECIAL PITOT TUBES FOR PULSATING FLOW

The mean velocity measurements of unsteady flows, if made by conventional pitot tubes, are usually inaccurate.[4] In such measurements, one can expect errors in the range of 5 to 30% of mean total pressure. This measurement can be improved by using specially designed probes when the application involves unsteady or pulsating flows.

Figure 2.16v shows a design provided with a low-capacity capillary probe filled with silicon oil. The oil serves to transmit the process pressure to the d/p transducer. This type of probe was developed and is used by Deutsche Forschungs– und Versuchsanstalt für Luft und Raumfahrt in Germany.[5]

Figure 2.16w shows another example of a probe designed to measure unsteady flow. This probe was developed in the Aeronautical Research and Test Institute in Czechoslovakia.[6] The main design challenge in this design is to equalize the resistances in the input and output openings of the probe. Also, to protect against resonance during measurement, the natural frequency of the probe must be carefully tuned.

TABLE 2.16u
*Calculation of Pressure Differentials Generated By Area Averaging Pitot Stations**

Equations for Differential Pressure Calculation	*Terms Used*
$DP = \left(\frac{\text{ACFM}}{\text{Area}}\right)^2 \times \frac{\text{DENS}}{(1096.845)^2}$	Area = Cross-sectional area of duct section in ft^2
	ACFM = Actual cubic feet per minute
$DP = \left(\frac{\text{SCFM}}{4000.7 \times \text{Area}}\right)^2$	*DP* = Differential pressure in inches w.c.
	M = Mass flow in pounds per hour
	SCFM = Standard cubic feet per minute
$DP = (V)^2 \times \frac{\text{DENS}}{(1096.845)^2}$	*V* = Velocity in feet per minute
	PABS = Absolute pressure in PSIA
	PATM = Atmospheric pressure in PSI
$DP = \left(\frac{M}{60 \times \text{Area}}\right)^2 \times \frac{1}{\text{DENS} \times (1096.845)^2}$	Ps = Static pressure in inches w.c.
	T = Temperature in degrees F
	DENS = Density at actual conditions lbs/ft^3
	DENSTD = Density at standard conditions lbs/ft^3

*Courtesy of Brandt Instruments.

© 2003 by Béla Lipták

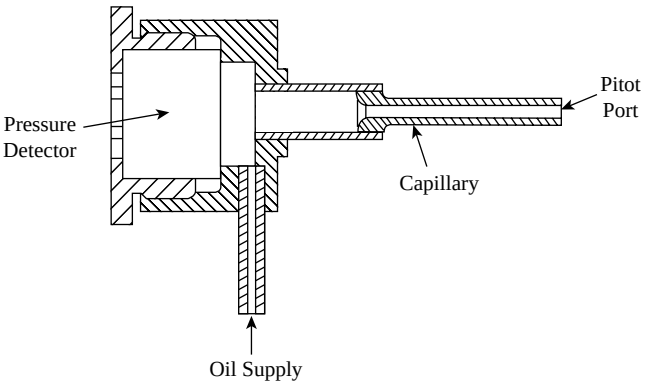

FIG. 2.16v
On highly pulsating flow measurements a minute flow of silicon oil through a capillary can serve as a pressure-averaging purge.

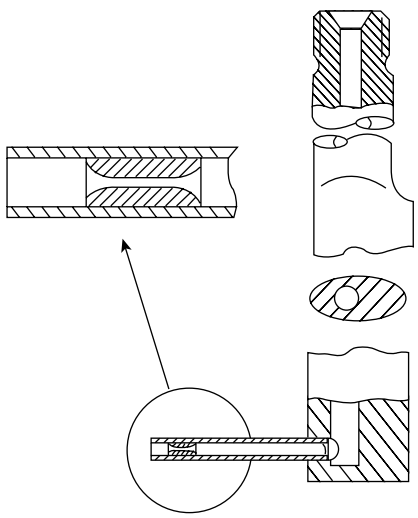

FIG. 2.16w
Pitot tube designed for pulsating flow averaging using tuned natural frequency.[6]

References

1. Shaw, R., The influence of orifice geometry on static pressure measurements, *Fluid Mech.*, 7, pt. 4, 1960.
2. Benedict, R. P., *Fundamentals of Temperature, Pressure, and Flow Measurements*, John Wiley & Sons, New York, 1969, 237.
3. Rayle, R. F., Influence of orifice geometry on static pressure measurements, ASME Paper 59-A-234, December 1959.
4. Becker, H. A., Reaction of pitot-tube in turbulent flow, *J. Fluid Mech.*, 69, pt. I, 1974.
5. Weyer, L. I., Bestimmung der zeitlichen Druckmittelwerte in stark fluktuirender Strömmung, inbesondere in Turbomaschienen, Forschungsbericht 74–34, Deutsche Forschungs–und Versuchsanstalt für Luft–und Raumfahrt-Portz-Wahn, 1974.
6. Neruda, J. and Soch, P., Measurement System with a Pitot Tube, Czechoslovak patent no. 218417.
7. Spink, L. K., *Principles and Practice of Flow Engineering*, 9th ed., The Foxboro Co., Invensys Systems, Inc., Foxboro, MA, 1967.

Bibliography

The Accuracy of the Pitot Tube Traverse Method of Measuring Pipe Flow at Various Distances up to 30 Diameters Downstream of a Smooth Right-Angled Bend, National Engineering Laboratory Flow Measurement Memo, No. 37, 1969.

Andrew, W. G. and Williams, H. B., *Applied Instrumentation in the Process Industries*, Vol. I, 2nd ed., Gulf Publishing Co., Houston, TX, 1979.

Baker, R. C., *Flow Measurement Handbook*, Cambridge University Press, UK, 2000.

Beitler, S. R., Present status of the art of flow measurement in the power industry, ASME Paper No. 68-WA/PTC-7, December 1968.

Cushing, M., The future of flow measurement, *Flow Control*, January 2000.

De Boom, R. J., Flow meter evaluation, ISA Conference, Paper #91-0509, 1991.

Desmeules, M., *Fundamentals of Gas Measurement*, Canadian Meter Company, Milton, Ontario, Canada, June 1999.

Dietrich, P. D., Primary flow meter, *Instrum. Control Syst.*, December 1968.

Eren, H., Flowmeters, *Survey of Instrumentation and Measurement*, S.A. Dyer, Ed., John Wiley & Sons, New York, 2001.

Flow meter survey, *Instrum. Control Syst.*, 42(3), 115–130, 1969, and 42(7), 100–102, 1970.

Furness, R. A., Developments in pipeline instrumentation, *Pipe Line Rules of Thumb Handbook*, 4th ed., Gulf Publishing, Houston, TX, 1998.

Hiser, R., Increased functions and reduced costs of differential pressure flowmeters, *Meas. Control*, September 1990.

Ifft, S. A., *Custody Transfer Flow Measurement with New Technologies*, Saudi Aramco, Saudi Arabia, 1999.

Lipták, B. G., Flow measurement trends, *Control*, June 2000.

London, A. V., Less traditional methods of flow measurements, *Process Eng., Plant & Control*, 47–50, 1968.

Malherbe, G. and Silberberg, S., Device for measuring the flow of pulverized control, central electricity generating board, Translation CE 4938 from *Automatisme*, 13(3) 114–122, 1968.

Migliorini, R., Pitot sensors, *Meas. Control*, September 1991.

Miller, R. W., *Flow Measurement Engineering Handbook*, 3rd ed., McGraw-Hill, New York, l996.

Ower, E. and Pankhurst, R. D., *The Measurement of Air Flow*, 4th ed., Pergamon Press, London, 1966.

Scarpa, T. J., Flow velocity profiles, *Meas. Control*, September 1992.

Spencer, E. A., Flow Measurements at the National Engineering Laboratories, *Process Eng. Plant & Control*, 53–57, August 1968.

Spitzer, D. W., *Flow Measurement*, 2nd ed., ISA, Research Triangle Park, NC, 2001.

Stobie, G. J., Wet gas metering in the real world, Wet Gas Metering Seminar, Paris, 2001.

Waring, T., *Fundamental of Rotary Meter Measurement*, Dresser Canada, June 1999.

Yoder, J., Flowmeter shootout, part I and II: new technologies, *Control*, February and March 2001.

© 2003 by Béla Lipták

2.17 Polyphase (Oil/Water/Gas) Flowmeters

I. H. GIBSON (2003)

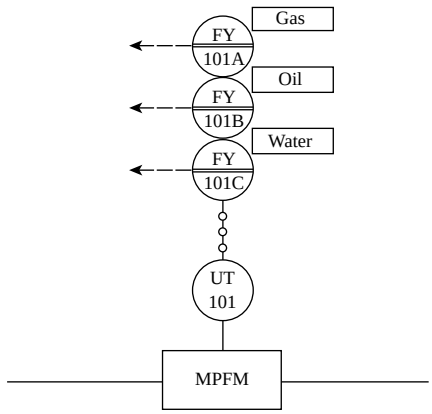

Flow Sheet Symbol

Design Pressure	Limited by piping design class
Operating Temperature Range	Limited by piping design class, 30 to 270°F (0 to 130°C)
Fluids	Mixtures of liquids, vapors, or gases; typically oil, water, and gas
Cost	Extremely variable, depending on line size, pressure rating, and installation requirements, starting at about $100,000 Subsea equipment commonly twice the price of surface-design units of comparable capacity
Accuracy	Five to 10%, depending on relative proportions of phases
Partial List of Suppliers	3-Phase Measurements AS (VenturiX, PhaseTester) (www.framoeng.no) Agar Corp. (www.agarcorp.com) Aker-Kvaerner (DUET) (www.kvaerner.com/kop) FlowSys AS (Topflow) FMC Technologies (www.fmctechnologies.com) Framo Engineering AS, Schlumberger (www.framoeng.no) Jiskoot Autocontrol (Mixmeter) (www.jiskoot.com) McCrometer (www.mccrometer.com) Petroleum Software Ltd. (ESMER) (www.petroleumsoftware.co.uk) Roxar AS (Fluenta, MFI) (www.roxar.com) Solartron ISA (Dualstream) (www.solartronisa.com)

Whereas most flow measurements are carefully designed to operate in single phase (gas, vapor, liquid), there are many circumstances in which the ability to distinguish the components of a liquid/vapor/gas mixture (or, indeed, multiple immiscible liquids, vapor, and gas) in the presence of solids is highly desirable.

In the production of oil/gas from unpumped petroleum wells, the flow from several thousand meters underground to the surface brings up water (commonly saline), inert gases such as carbon dioxide and nitrogen, water-saturated hydrocarbon gas (methane, ethane), hydrocarbon condensates (propane, butane, and so on), and higher hydrocarbons.

The liquids and gases do not normally travel at the same velocity, as the liquids are being dragged to the surface by the expanding gas flow. A wide variety of flow regimes are possible, depending on the mixture of phases and the geometry. A production facility may have tens of wells, and individual wells in a facility may have different mixes of ownership. This leads a requirement to be able to determine the flow of the economically interesting components from each well as accurately as possible.

The traditional method has been to use a small *test separator* that will separate the gas and the oil and water phases from a single well by gravity while production from the rest of the facility is flowing to production separators. The test separator is fitted with a full array of level and pressure controls and flowmeters (turbine, positive-displacement, orifice, and others) to enable a steady-state operation to be achieved. Commonly, the test separator is operated at a pressure slightly above the production separator to allow the

© 2003 by Béla Lipták

streams from the test separator to be mixed with the flows out of the production separator. This requires a large amount of room and a complex valving system to enable each well to be tested separately. As pressures are commonly 1000 to 4500 PSI (7000 to 30,000 kPa) or higher, and the temperature is 150 to 270°F (65 to 130°C) at the surface, the test separator is not an inexpensive device. Individual well tests rarely can be scheduled more frequently than monthly as a result of the time taken to stabilize operation at a set of operating conditions. Even with the best of intentions, test separator measurements are notorious for inaccuracies, because quite small amounts of vapor disengaging in the liquid meters can induce errors in the 5 to 10% region.

For offshore platforms, where the cost of test separator equipment can exceed on-shore costs by many times (and especially for subsea operations, where operators cannot easily access equipment), the potential savings from an on-line method of measurement have driven the development of a variety of devices over the past 15 years. These employ a wide variety of operating principles, some of which are outlined below.

The techniques used differ depending on the ratio of liquid to gas (known as LGR or the inverse, GLR). The extreme end of the LGR (say <10% by mass) is classified as *wet gas.*

WET-GAS METERING

The standard approach for wet-gas metering treats the fluid as a gas. This uses differential-pressure devices (venturi or orifice) or vortex or ultrasonic meters. Turbine meters are unsatisfactory because even small quantities of high-velocity liquid can damage the meter. The venturi has a considerable advantage over the orifice in that it does not dam liquid behind the device, altering the flow profile. The McCrometer V-cone™ meters (Section 2.28) are also suitable for this service and have also been used for flow conditioners.

Normal ISO 5167 flow conditioners are *not* recommended for wet-gas service; not only can they dam liquids, they can induce hydrocarbon hydrate formation.

Where practical, insulation of the metering run is recommended. In some environments, trace heating may be indicated to prevent hydrate formation in the tapping connections.

Pressure tappings should be short and inclined vertically upward to avoid trapping condensate in the connections and to avoid hydrate formation.

Process gas chromatographs are not recommended for wet-gas services unless the liquid content is below 0.1%.

Venturi Meters

The venturi (Section 2.29) is much more rugged than the orifice in wet-gas service and allows for higher differential-pressure operation. With modern transmitters, turndown up to 10:1 is possible and may be necessary, given that wet-gas behavior is far more variable than that of a pure gas.

Design is generally in accordance with ISO 5761–1, although recent work by Reader-Harris et al[1] has shown that the ISO coefficients are not as well defined as claimed. The coefficients are quite sensitive to minor machining variations and, at high Reynolds number operation, the flow may break away from the throat. The coefficient can also be sensitive to the diameter-to-length ratio of the tappings; use of the "triple-T" piezometer connections advocated by ISO 5167 is impractical for wet-gas service, because the downward-facing tappings would fill with liquid.

A downstream tapping after the full pressure recovery is achieved is recommended to allow the calculation of liquid content and temperature correction to upstream conditions.

Algorithms for Wet-Gas Measurement

Differential devices used on wet-gas service will generally *overestimate* the dry-gas flow rate, and various algorithms have been developed to compensate. The Chisholm and Murdock[2] correlations were developed for orifice plates; the de Leeuw correlation has been developed for venturi meters and is an extension of the Chisholm equations.

In addition to the dry-gas flow rate, it is normally required to determine the liquid flow rate, and particularly the condensate flow rate. All three correlations (de Leeuw, Chisholm, Murdock) are based on the Lockhart–Martinelli parameter, which is a function of both liquid flow rate and density. The liquid flow rate can be determined by

- Routing the flow to a test separator
- The use of tracer techniques
- Sampling

or a combination of these. Since these are all spot-test techniques, modification to the Lockhart–Martinelli equation can be made to work in terms of the dry-gas mass fraction, which is relatively constant, provided the wetness of the gas is constant. None of these techniques is easily useful in subsea conditions, and adaptations have been made to apply dual measurements in series with devices of different geometry that allow the Lockhart–Martinelli relationship to be solved for equal values of liquid/gas. These still require considerable input of process data derived from composition.

Theory of Operation of Wet-Gas Metering

It has long been known that a gas stream carrying a well-dispersed liquid content through a differential flow element (orifice, nozzle, venturi, or V-cone) will develop a higher differential than that due to the corresponding gas flow. If the properties of the gas and liquid are known, it is possible to calculate the relative content of liquid in the gas.

The following development has been adapted from the UK DTI Oil and Gas Division's Guidance Notes for

© 2003 by Béla Lipták

Petroleum Measurement under the Petroleum (Production) Regulations.[2]

de Leeuw Wet-Gas Venturi Correlation

de Leeuw[3] has shown that the real gas mass flow rate can be derived from the following equations (all equations are based on SI units):

$$Q_{\text{real gas}} = \frac{Q_{\text{uncorrected gas}}}{\sqrt{(1 + CX + X^2)}} \qquad \textbf{2.17(1)}$$

where $Q_{\text{uncorrected gas}}$ = uncorrected gas mass flow rate as indicated by the venturi meter using the following equation:

$$Q_{\text{uncorrected gas}} = C_{\text{gas}} \varepsilon \pi d^2 \frac{\sqrt{(2\rho_{\text{gas}} \Delta P)}}{4\sqrt{1-\beta^4}} \qquad \textbf{2.17(2)}$$

where

C_{gas} = discharge coefficient of the venturi flowmeter in dry gas as determined through calibration
ε = expansibility of gas in venturi as defined by ISO 5167-1
d = throat diameter of the venturi flowmeter (corrected for temperature)
ρ_{gas} = gas density at upstream conditions
ΔP = raw differential pressure as measured by the transmitter
β = ratio of d to D, the pipe diameter

and X is the *Lockhart–Martinelli* parameter, which is derived as follows:

$$X = \frac{Q_{\text{liquid}}}{Q_{\text{real gas}}} * \sqrt{\frac{\rho_{\text{liquid}}}{\rho_{\text{gas}}}} \qquad \textbf{2.17(3)}$$

where

Q_{liquid} = combined liquid flow rate through the venturi flowmeter
ρ_{liquid} = combined liquid density

The coefficient C is given by the following equation:

$$C = \left(\frac{\rho_{\text{liquid}}}{\rho_{\text{gas}}}\right)^n + \left(\frac{\rho_{\text{gas}}}{\rho_{\text{liquid}}}\right)^n \qquad \textbf{2.17(4)}$$

where the exponent n is given by

$$n = 0.606(1 - e^{-0.746 Fr_g}) \quad \text{for } Fr_g \geq 1.5 \qquad \textbf{2.17(5)}$$

$$n = 0.41 \quad \text{for } 0.5 \leq Fr_g \leq 1.5 \qquad \textbf{2.17(6)}$$

and Fr_g is the gas Froude number given by

$$Fr_g = \left[\frac{V_{\text{gas}}}{\sqrt{(gD)}}\right] * \left[\frac{\sqrt{\rho_{\text{gas}}}}{\sqrt{(\rho_{\text{liquid}} - \rho_{\text{gas}})}}\right] \qquad \textbf{2.17(7)}$$

where

V_{gas} = superficial gas pipe velocity
g = local acceleration due to gravity

V_{gas} can be derived using an iterative method and "seeding" a velocity based on the uncorrected mass flow rate. The first pass equation is

$$V_{\text{gas}} = \frac{4 * Q_{\text{uncorrected gas}}}{\rho_{\text{gas}} \pi D^2} \qquad \textbf{2.17(8)}$$

For further iterations $Q_{\text{uncorrected gas}}$ is replaced by consecutive $Q_{\text{real gas}}$ values until the equation converges to a solution.

Liquid Mass Flow Rate Correction Algorithm

The resultant liquid mass flow rates can be derived from the following equations:

$$Q_{\text{total}} = Q_{\text{real gas}} + Q_{\text{liquid}} \qquad \textbf{2.17(9)}$$

Condensate mass flow rate

$$Q_{\text{condensate}} = Q_{\text{total}} * \zeta_{\text{condensate}} \qquad \textbf{2.17(10)}$$

Water mass flow rate

$$Q_{\text{water}} = Q_{\text{total}} * \zeta_{\text{water}} \qquad \textbf{2.17(11)}$$

Methanol (or glycol) mass flow rate

$$Q_{\text{methanol}} = Q_{\text{total}} * \zeta_{\text{methanol}} \qquad \textbf{2.17(12)}$$

where

$\zeta_{\text{condensate}}$ = condensate mass fraction
ζ_{water} = water mass fraction
ζ_{methanol} = methanol mass fraction

In turn,

$$\zeta_{\text{condensate}} = X * \psi_{\text{condensate}} \qquad \textbf{2.17(13)}$$

$$\zeta_{\text{water}} = X * \psi_{\text{water}} \qquad \textbf{2.17(14)}$$

$$\zeta_{\text{methanol}} = X * \psi_{\text{methanol}} \qquad \textbf{2.17(15)}$$

© 2003 by Béla Lipták

where

$\psi_{condensate}$ = condensate-to-gas mass fraction
ψ_{water} = water-to-gas mass fraction
$\psi_{methanol}$ = methanol-to-gas mass fraction (methanol injection is commonly used to suppress hydrocarbon hydrate formation)

Liquid Density Calculation Algorithm

The liquid density can be calculated as follows:

$$\rho_{liquid} = \frac{\psi_{liquid}}{\left(\left(\frac{\psi_{condensate}}{\rho_{condensate}}\right)+\left(\frac{\psi_{water}}{\rho_{water}}\right)+\left(\frac{\psi_{methanol}}{\rho_{methanol}}\right)\right)} \qquad \textbf{2.17(16)}$$

where

ψ_{liquid} = total liquid to gas mass ratio
ρ_{liquid} = density of liquid
$\rho_{condensate}$ = density of hydrocarbon condensate
ρ_{water} = density of water
$\rho_{methanol}$ = density of methanol
$\rho_{condensate}$ = is derived from the condensate base density and corrected for temperature and pressure (Ctl and Cpl)

Corrections from the standard API MPMS11.2.1M may be applied. However, for improved accuracy, it is recommended that samples of the condensate be obtained and analyzed to derive specific correction factors. The values of K_0 and K_1 for crude oil (613.9723 and 0, respectively) are not ideal for condensate, and the alternatives from the standards referred to above may be no better.

Water and methanol densities can be derived as follows:

$$t = (t_m + 273.15) * \left(\frac{P_3}{P_1}\right) K_3 - 273.15 \qquad \textbf{2.17(17)}$$

where

t = temperature at the inlet of the venturi
A, B, C = water constants (e.g., –0.0001732, –0.1307, 1040)
D, E, F = methanol constants (e.g., 0.0000713, –0.3344, 540)

The correct values of these methanol and water constants may vary due to salinity or product type. It is therefore advisable to have the liquids analyzed to determine appropriate values.

Upstream Temperature Correction and Pressure Recovery

The correction for downstream measured temperature to upstream temperature (in degrees centigrade) at the inlet is given by

$$t = (t_m + 273.15) * \left(\frac{P_3}{P_1}\right) K_3 - 273.15 \qquad \textbf{2.17(18)}$$

where

t_m = measured temperature
P_3 = fully recovered downstream pressure
P_1 = pressure measured at the upstream tapping
K_3 = downstream to upstream temperature correction exponent

P_3 can be measured using a third pressure tapping or calculated (in bar) from the following empirical equation from Miller:[4]

$$P_3 = P_1 - 10^{-3} * \Delta\omega \qquad \textbf{2.17(19)}$$

where

$$\Delta\omega = (A\beta^2 + B\beta + C) * \Delta P \qquad \textbf{2.17(20)}$$

and the constants A, B, and C, for venturies with 7 and 15° exit cone angles, are as follows:

7° cone angle	$A = 0.38$	$B = 0.42$	$C = 0.218$
15° cone angle	$A = 0.59$	$B = 0.86$	$C = 0.436$

Gas Mass Fraction Estimation Using Tracer Techniques

The gas mass fraction can be estimated as follows:

1. Perform the tracer flow technique to determine condensate and water flow rates and mass ratios. This uses concentrated oil-soluble and water-soluble fluorescent chemicals, injected upstream and partially recovered by sampling downstream of the flowmeter.
2. Analyze the condensate to determine base density.
3. Sample the gas to determine gas density.
4. Record the total uncorrected gas flow from venturi during the tracer flow technique.
5. Determine the dry "first pass" gas mass fraction and liquid-to-gas ratio based on the recorded uncorrected gas flow and tracer flow results (corrections for methanol injection after completion of tracer technique may be required).
6. *Seed* values from the last stage into the wet-gas venturi flow calculation to determine a "first pass" corrected gas flow rate.
7. *Re-seed* this value into the calculation, correcting gas mass ratio and liquid-to-gas ratio.
8. Iterate the process until the corrected gas flow rate converges.

Solartron-ISA Dualstream II™ Theory

The Solartron-ISA Dualstream™ II, originally developed by British Gas, extends the theory noted above by fitting two dissimilar pressure differential devices in series. These have differing Lockhart–Martinelli characteristics, and the

© 2003 by Béla Lipták

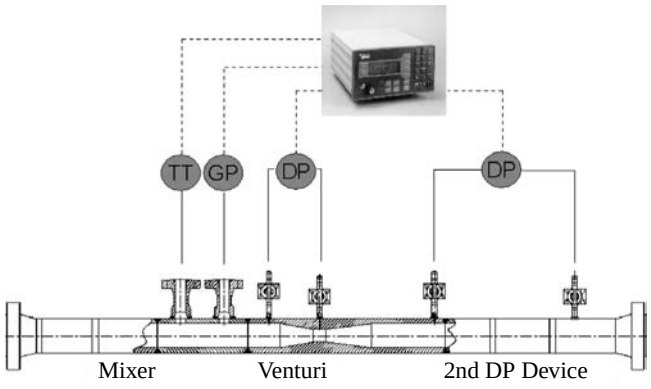

FIG. 2.17a
Solartron—ISA Dualstream II™ wet gas flowmeter.

combination can determine changes in the gas-to-liquid ratio. The venturi will generate an indicated flow rate. This can be corrected to generate a "true" gas flow rate using the equations in previous sections.

The second "DP device" will generate a second indicated flow rate. This flow rate can be corrected to give a "true" gas flow rate using similar relations.

A simultaneous equation can be formed from these flow rates:

$$Q_g = \frac{Q_{gi\,(\text{venturi})}}{1 + M_{(\text{venturi})} \dfrac{(1-x)}{x} \dfrac{C_g}{C_l} \varepsilon_g \sqrt{\dfrac{\rho_g}{\rho_l}}} = \frac{Q_{gi\,(\text{2nd Dp})}}{1 + M_{(\text{2nd Dp})} \dfrac{(1-x)}{x} \dfrac{C_g}{C_l} \varepsilon_g \sqrt{\dfrac{\rho_g}{\rho_l}}} \qquad \textbf{2.17(21)}$$

$$x = \frac{\sqrt{\dfrac{\rho_g}{\rho_l}} \left(\dfrac{Q_{gi\,(\text{2nd Dp})}}{Q_{gi\,(\text{venturi})}} M_{(\text{venturi})} - M_{(\text{2nd Dp})} \right)}{\left(1 - M_{(\text{2nd Dp})} \sqrt{\dfrac{\rho_g}{\rho_l}} \right) - \dfrac{Q_{gi\,(\text{2nd Dp})}}{Q_{gi\,(\text{venturi})}} \left(1 - M_{(\text{venturi})} \sqrt{\dfrac{\rho_g}{\rho_l}} \right)} \qquad \textbf{2.17(22)}$$

This enables a continuous estimation of the liquid-to-gas ratio without the necessity for tracer measurements, and it is particularly useful sub-sea, where tracer measurements are impractical with current technology.

MULTIPHASE FLOWMETERS

The various true multiphase flowmeters can be effective from straight liquid through to 95 or 97% gas. Some meters, such as the Agar MPFM400 and Jiskoot, attain the extreme gas end by using an in-line separator to send the wet gas through a wet-gas meter and the remaining gas, with oil and water, through a separate multiphase flowmeter section. No standards exist as yet to assist engineers in designing multiphase metering systems, and there are wide variations in the methods used to define *accuracy* and performance. When considering a manufacturer's performance and accuracy statements, it is essential to understand the implications of accuracies quoted in different ways. There are three common ways in which multiphase meter accuracies are presented:

1. Percent phase volume flow rate
2. Percent total multiphase flow rate
3. Percent gas and liquid flow rate plus absolute uncertainty of water cut in liquid phase

Method 1 is favored by metrologists and clearly represents performance as stated. This method may not be the most practical for extreme cases of phase fractionation.

Methods 2 and 3, whereas quoting relatively small numbers on the order of 5 to 10% for gas/liquid phase uncertainties and 2 or 3% for percentage water cut, may nevertheless exhibit very large individual phase errors of 100% or more, depending on the absolute value of the percentage water.

The first requirement for a mixed liquid phase is to distinguish hydrocarbon from water. If the liquid phase is oil-continuous, typically water less than 40% liquid hydrocarbon, then dielectric constant measurement at microwave frequencies can determine the water fraction. The dielectric constant of dry hydrocarbon is in the order of 2 to 4, depending on composition, while water is 82, giving a sensitive means of measurement.

For higher water content, the measuring element will short out in a water-continuous phase, but density measurement can distinguish water from oil. This requires stream-specific characterization, as the composition and density of the liquid is pressure and temperature dependent.

The next requirement is to distinguish the flow of liquid from the flow of gas in a system where the two will try to separate and travel at different velocities. Flow conditioning in these systems is commonly provided by a horizontal branch-in, vertical-out tee, which acts as a mixer. Cross-correlation flowmeters (see Section 2.5) used by some suppliers apply nuclear techniques to measure the density of the stream twice, a short vertical distance apart, and correlate the fluctuations in density with time; others use electrical characteristics in a similar manner.

As it is difficult to distinguish the differing velocities of liquid and gas, it is common to measure the velocity of one phase and use flow-modeling techniques to estimate the velocity of the other phase.

Most of the techniques are limited by the liquid/gas ratio (LGR). Lean gas streams, with less than 5% liquid, are difficult to measure given that the density of the gas stream can be comparable with that of the liquid phase; at 3000 PSI (21,000 kPa), the gas phase can be on the order of 200 kg/m^3 with the liquid phase perhaps 600 kg/m.^{3} So, a change from 5% liquid to 4% liquid is a 20% variation in liquid, but it will

© 2003 by Béla Lipták

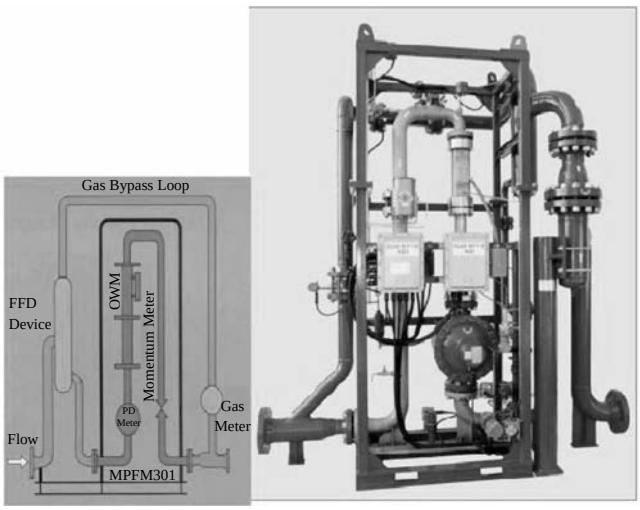

FIG. 2.17b
Agar MPFM 400 high void fraction meter.

only change the density by less than 2%. To avoid this, one supplier (AGAR) uses a centrifugal separator to separate much of the gas from a remaining three-phase mixture, measure this separately, and then mixes it back after the other stream has been measured. Removing 80% of the gas enables the multiphase meter section to be much smaller and more sensitive to the valuable liquid hydrocarbon. The true volumetric flow of the multiphase mixture is measured by a positive-displacement Oval™ gear meter, and venturi techniques and microwave water content distinguish the different phases.

The orientation of a multiphase flowmeter can strongly influence the multiphase flow regime. In systems with medium to high gas content and low velocity, vertical upflow can find the gas phase unable to continuously sweep the liquid phase forward, and the liquid may recycle backward, leading to metering errors and to slug flow. This offers a significant low-end constraint on flow through devices of fixed geometry, which will differ between devices of similar size.

Horizontal-flow installations can show internal segregation, with gas, oil, and water layers traveling at different velocities. Again, maintaining a high velocity helps to mix the phases, but the upstream piping layout may contribute to slugging, which the meter system can do little to correct.

Measurement in multiphase flow is notable by widely varying conditions under nominally constant flow. In slug flow, the liquid fraction can vary between almost zero in the region after a liquid slug to almost 100% inside the slug. Significant fluctuations will also be present in annular and churn flow patterns.

The pressure drop of a liquid slug passing through a venturi meter can be five times higher than the average pressure drop for the flow; the minimum pressure drop in the same flow, corresponding to the *film* region, can be 20% of the average. Therefore, a venturi meter would experience pressure drop varying by 25:1 at a nominally steady multiphase production condition. This is one reason for the

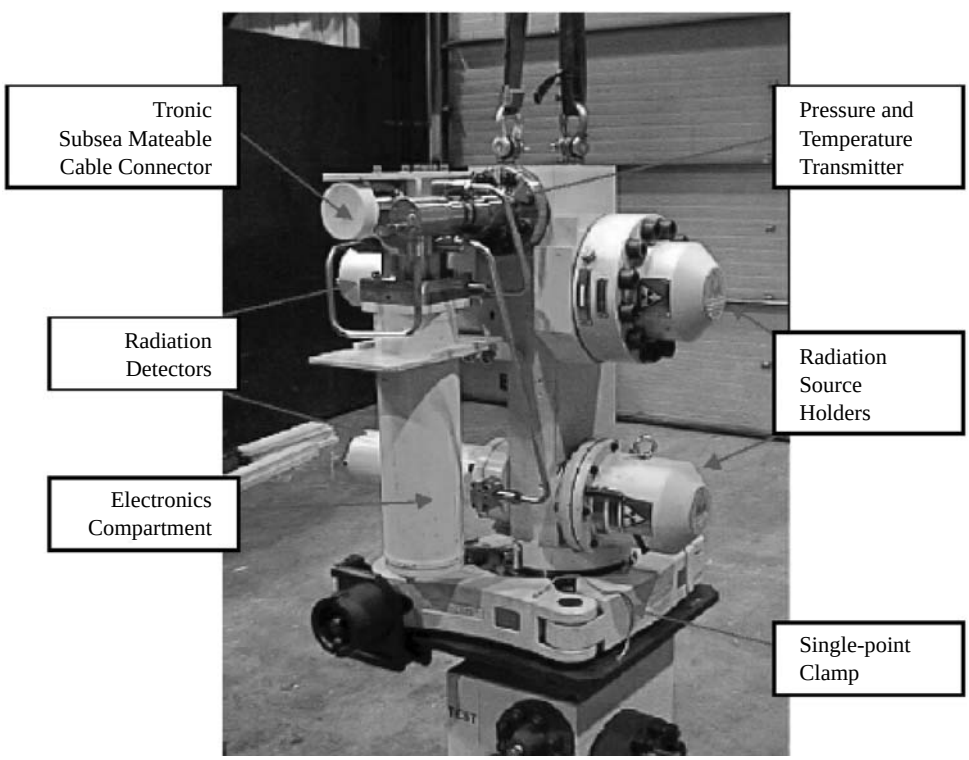

FIG. 2.17c
Aker-Kvaerner "DUET" subsea multiphase flowmeter.

© 2003 by Béla Lipták

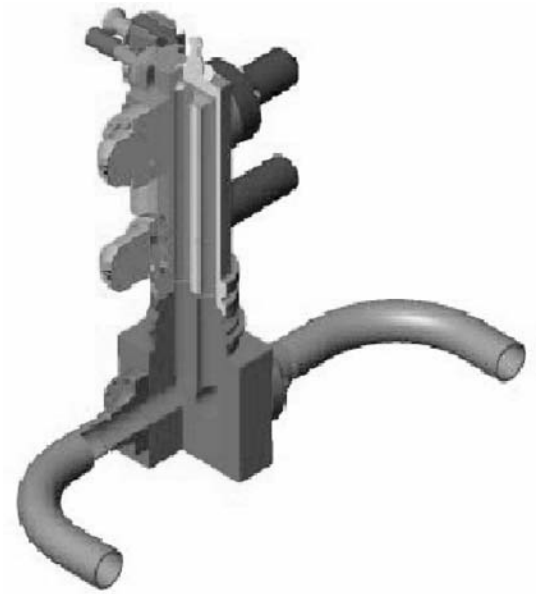

FIG. 2.17d
Aker-Kvaerner "DUET" subsea multiphase flowmeter sectional drawing.

attraction of correlation flowmetering techniques, which do not experience such extremes yet require (and see) appreciable fluctuations in physical properties in the short term.

To reduce the uncertainty associated with measurement of a parameter that fluctuates over such a wide range, many samples are required over a relatively long measuring period.

When a multiphase meter is located at the receiving end of a pipeline, the resulting measurement is influenced by the flow into the line (which may be combined from several wells); the flow patterns developing along the line; the elevation changes along the line, which can trap liquid at low points; the outlet pressure changes; and other fluctuations. As can be imagined, the flow out of such a pipeline varies considerably, and the measuring equipment must be specified to cover the full range of the variation, usually based on inadequate data.

References

1. Reader-Harris, M. J., Brunton, W. C, Gibson, J. J., Hodges, D. and Nicholson, I. G., Discharge coefficients of venturi tubes with standard and nonstandard convergent angles, *Flow Meas. Instrum.*, 12, 135–145, 2001.
2. U.K. Department of Trade and Industry (DTI) Oil and Gas Division Guidance Notes For Petroleum Measurement Under The Petroleum (Production) Regulations Issue 6, October 2001.
3. de Leeuw, H., Liquid correction of venturi meter readings in wet gas flow, North Sea Flow Measurement Workshop, Kristiansand, Norway, Paper 21, 1997.
4. Miller, R. W., *Flow Measurement Engineering Handbook*, Table 6.4, 3rd ed., McGraw-Hill, New York, 1996.

Bibliography

Chisholm, D., Two phase flow through sharp-edged orifices, research note, *J. Mech. Eng. Sci.*, 1977.

Couput, J. P., Wet Gas Metering in the Upstream Area: Needs, Applications & Developments, North Sea Flow Measurement Workshop, Gleneagles, Scotland, Paper 6.1, 2000.

Jamison, A. W., Johnson, P. A., Spearman, E. P. and Sattary, J. A., Unpredicted behaviour of venturi flow meter in gas at high Reynolds numbers, North Sea Flow Measurement Workshop, Peebles, Scotland, 1996.

Murdock, J. W., Two phase flow measurement with orifices, *J. Basic Eng.*, December 1962.

Steven, R., An Overview of the Current State of Wet Gas Metering in the Natural Gas Production Industry and Proposals for Future Research, 2nd Annual Course on Practical Developments in Gas Flow Metering—Focus on Cost Reduction, NEL, East Kilbride, Glasgow, 1999.

Stobie, G., Wet gas flow measurement in the real world, One Day Seminar on Practical Developments in Gas Flow Metering, National Engineering Laboratory, East Kilbride, Glasgow, 1998.

Stobie, G. J., Wet gas metering in the real world—part II, Wet Gas Metering Seminar, Paris, 2001.

Van Maanen, H. R. E., Cost Reduction for Wet Gas Measurement Using the Tracer-Venturi Combination, Practical Developments in Gas Flow Metering, Paper 2, NEL, East Kilbride, Glasgow, 1999.

Wilson, M. B., The Development and Testing of an Ultrasonic Flow Meter for Wet Gas Applications, Seminar on the Measurement of Wet Gas, East Kilbride, Scotland, 1996.

Zanker, K. J., The Performance of a Multi-path Ultrasonic Meter with Wet Gas, North Sea Flow Measurement Workshop, Paper 6.2, Gleneagles, Scotland, 2000.

© 2003 by Béla Lipták

2.18 Positive-Displacement Gas Flowmeters



Flow Sheet Symbol

R. SIEV (1969) **G. M. CRABTREE** (1982, 1995) **JESSE YODER** (2003)

Type of Design	A. Positive-displacement B. High-precision
Design Pressures	Low-pressure designs available from 5 to 100 PSIG (0.34 to 6.9 bars); high-pressure units available up to 1440 PSIG (100 bars)
Design Temperatures	Standard units can be used from –30 to 140°F (–34 to 60°C)
Materials of Construction	Aluminum, steel, plastics, and synthetic elastomers
Inaccuracy	A. 0.5 to 1% of registration B. 0.5% of actual flow over 50:1 range
Costs	A household gas meter for 250 SCFH (7 SCMH) capacity costs about $150. A 50,000 SCFH (1416 SCMH) capacity, diaphragm-type, displacement-type flowmeter in cast aluminum for natural gas service costs about $5000. For natural gas service a 70,000 SCFH (1983 SCMH) rotary positive-displacement meter in cast aluminum costs about $3000.
Partial List of Suppliers	American Meter Co. (A) Actaris Metering System (A) Bopp & Reuther (www.burhm.de) (A) Dresser Instrument (Root Meter) (www.dresserinstruments.com) (A) Elster-AMCO (Germany) (A) Invensys Process Systems (www.invensysips.com) (A) Instromet (A) Kimmon Mfg. (Japan) (A) Liqua-Tech Controls Pierburg Instruments Inc. (www.pierburginstruments.com) (B) Ritter (Germany) RMG (Germany) Romet Ltd. (Canada) (A) Schlumberger Measurement Div. (www.slb.com/rms/measurement) (A)

Positive-displacement gas meters measure by internally passing isolated volumes of gas that successively fill and empty compartments with a fixed quantity of gas. The filling-and-emptying process is controlled by suitable valving and is translated into rotary motion to operate a calibrated register or index that indicates the total volume of gas passed through the meter.

The liquid sealed drum meter is the oldest commercial positive-displacement gas meter (see Figure 2.18a). Developed in the early 1800s, it was used for many years during the gaslight era. This type of meter is still available today and remains one of the most accurate of the displacement-type meters. Applications of the liquid sealed drum meter today

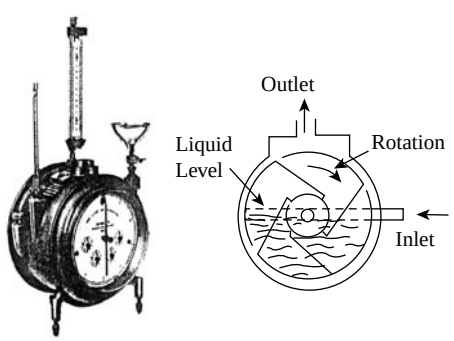

FIG. 2.18a
The liquid sealed drum meter.

© 2003 by Béla Lipták

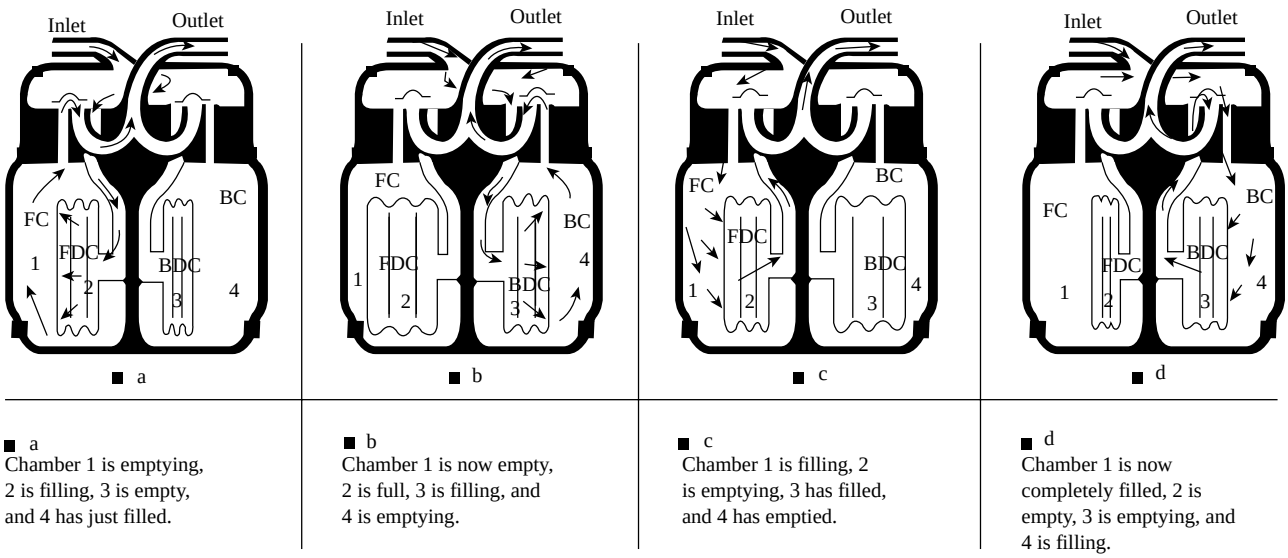

FIG. 2.18b

The four-chamber diaphragm meter; FC = front chamber; BC = back chamber; FDC = front diaphragm; BDC = back diaphragm chamber.

include laboratory work, appliance testing, pilot plant measurements, and as a calibration standard for other meter types.

Some of the inherent difficulties with the liquid sealed meter, such as changes in liquid level and freezing, were overcome in the 1840s with the development of the diaphragm-type positive-displacement meter. Thomas Glover is credited with inventing the first two-diaphragm, sliding-vane meters in 1843, in England. The early meters were constructed with sheepskin diaphragms and sheet metal enclosures. Today, meters are made of cast aluminum with synthetic rubber-on-cloth diaphragms. The principle of operation, however, has remained the same for almost 150 years. However, many material, product design, manufacturing, and calibration changes have occurred during that time.

THE DIAPHRAGM METER

The operating principle of the four-chamber diaphragm meter is illustrated in Figure 2.18b. The measurement section consists of four chambers formed by the volumes between the diaphragms and the center partition and between the diaphragms and the meter casing. Differential pressure across the diaphragms extends one diaphragm and contracts the other, alternately filling and emptying the four compartments. The control for the process is through the "D" slide valves that are synchronized with the diaphragm motion and timed to produce a smooth flow of gas by means of a crank mechanism. The crank and valve mechanism is designed and adjusted with no *top-dead-center* to prevent the meter from stalling. The rotating crank mechanism is connected through suitable gearing to the index, which registers the total volume passed by the meter.

The rating of small diaphragm meters is usually specified in cubic feet per hour (0.03 m^3/h) of 0.6 specific gravity gas that results in a pressure drop of 0.5-in. water column (0.13 kPa). Larger meters are often rated for flow at 2 in. water column (0.5 kPa) differential.

Since most meters are sold to gas utility companies that sell natural gas with a specific gravity of approximately 0.6, it may be necessary to determine the flow rating of a diaphragm for other gases. This is accomplished by the following equation:

$$Q_n = Q_c \sqrt{\frac{(SG)_c}{(SG)_n}} \qquad \textbf{2.18(1)}$$

where

Q_n = new flow rating (ft^3/h)*
Q_c = meter rating (ft^3/h)
$(SG)_c$ = specific gravity for which meter is rated (usually 0.6)
$(SG)_n$ = specific gravity of new gas

The inaccuracy of diaphragm positive-displacement meters is typically ±1% of registration over a range in excess of 200:1. This accuracy is maintained over many years of service. Deterioration of meter accuracy is rare unless unusual conditions of dirt, wear, or moisture in the gas are present.

ROTARY METERS

Rotary meters have one or more rotating parts that implement their measurement operation. Meter design enables them to operate at higher rates of speed than diaphragm meters. For this reason, they can meter higher gas volumes than diaphragm meters. In many cases, rotary meters have built-in temperature compensation to avoid measurement errors based on temperature variations.

* For SI units, refer to Appendix.

© 2003 by Béla Lipták

There are three types of rotary positive-displacement meters in use today for gas flow measurement:

- Lobed impeller
- Sliding vane
- Rotating vane

The Lobed Impeller

The lobed-impeller meter (described in Section 2.19, "Positive-Displacement Liquid Meters and Provers") is used for high-volume measurement up to 100,000 ft^3/h (up to 3000 m^3/h). This meter has a housing upon which two figure-eight impellers are mounted. The rotation is caused by a pressure differential that is set up across the meter. In this meter, the close clearance of moving parts requires the use of upstream filters to prevent deterioration of accuracy performance. Typically, the inaccuracy of lobed-impeller meters is ±1% over a 10:1 flow range at pressure drops of approximately 0.1 PSI (0.7 kPa).

Sliding-Vane Meters

A sliding-vane meter has four radial vanes in a single rotating drum that is eccentrically mounted. The rotation of the drum is caused by differential pressure against the vanes. When the drum revolves a single time, four volumes of gas are passed. The meter counts the number of revolutions to provide a readout of total volume.

Rotating-Vane Meters

The rotating-vane meter, as illustrated in Figure 2.18c, is an improvement on the lobed-impeller meter. Here, four compartments formed by the vanes rotate in the same direction as a rotating gate. The fixed volumes of gas are swept through the meter by the vanes, which are passed from inlet side to outlet side through the gate. Gears synchronize the motion of the vanes and gate. Typical inaccuracy for the rotating vane meter is ±1% over a 25:1 range at pressure drops of 0.05 in. of water column (0.013 kPa).

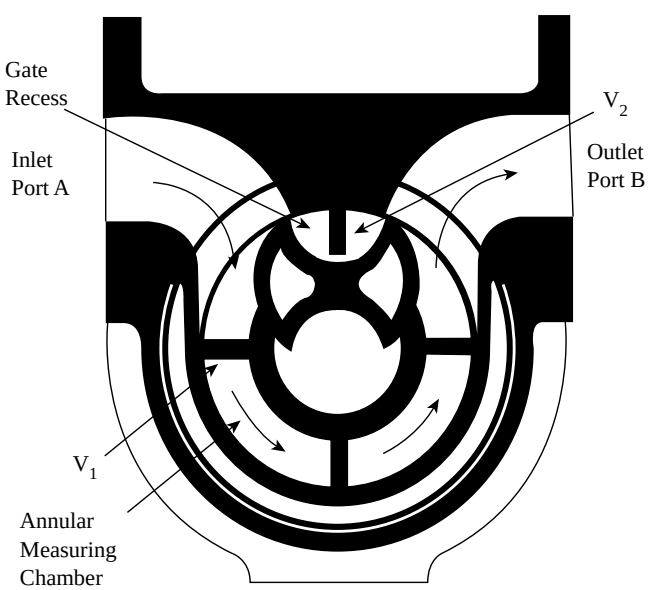

FIG. 2.18c
The rotating-vane meter.

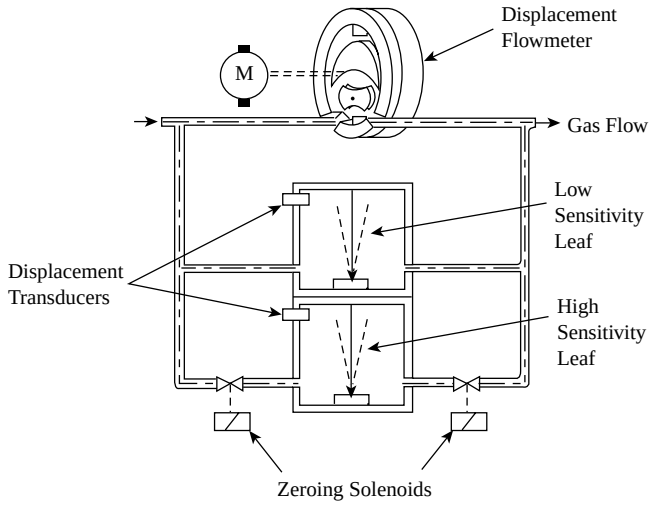

FIG. 2.18d
High-precision displacement flowmeter for gas service. (Courtesy of Pierburg Instruments.)

HIGH-PRECISION GAS FLOWMETER

For the high-precision measurement of airflows in engine test rigs, positive-displacement flowmeters are used. High precision and high rangeability are achieved by eliminating the pressure drop and thereby eliminating the slip or leakage flows. This is achieved by providing a motor drive for the displacement element and using it to introduce only as much driving energy as is needed to keep the pressures at the inlet and outlet of the meter equal (Figure 2.18d). This flowmeter uses high-sensitivity leaves to detect the pressure differential and displacement transducers to detect the deflection of the leaves. The flowmeter is also provided with automatic rezeroing capability through periodic solenoid isolation of the high-sensitivity leaves.

This flowmeter is claimed to provide a reading with only a 0.25% error over a 50:1 range and a 0.5% error over a 100:1 range. The meter is designed for ambient operating temperatures and 30 PSIG (2 bars) operating pressures. The different models of this flowmeter can detect air or gas flows from 0.3 to 1500 ACFM (0.6 to 2500 ACMH).

APPLICATION NOTES

All displacement gas meters can be used to measure any clean, dry gas that is compatible with the meters' construction materials and flow and pressure ratings. Dirt and moisture are the worst enemies of good meter performance; inlet filtering should be used when indicated. Since all gases change

© 2003 by Béla Lipták

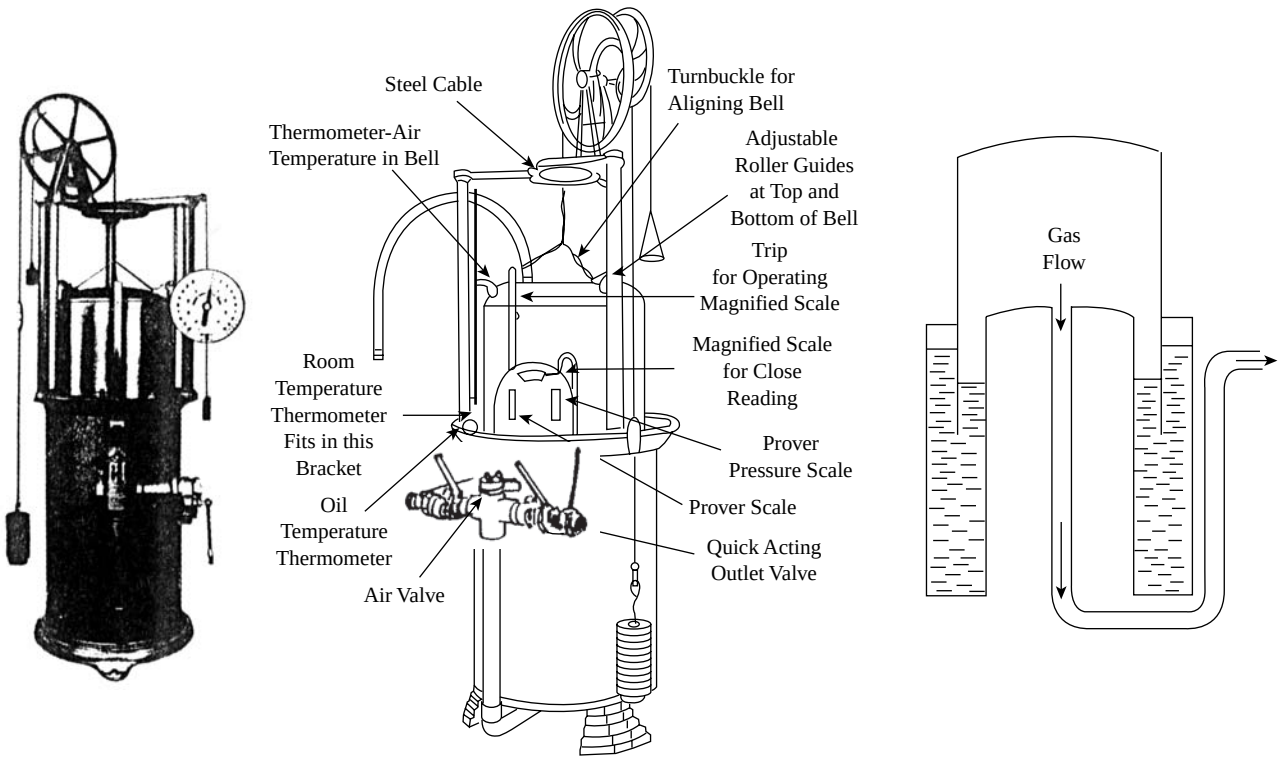

FIG. 2.18e
The construction of a meter prover.

volume with pressure and temperature changes, these sources of possible error should be controlled or compensated. The national standard cubic foot of fuel gas is at 14.73 PSIA and 60°F; significant deviation from these values should be accounted for in measuring standard gas volumes. At elevated pressures and lower temperatures, a deviation from the ideal gas laws occurs, requiring the application of a compressibility factor to the measured volumes.

TESTING AND CALIBRATION

The testing (or *proving*, as it is called in the gas utility industry) of gas meters is usually done using a special type of gasometer referred to as a *prover*. The construction of a meter prover is shown in Figure 2.18e. An accurately calibrated "bell" of cylindrical shape is sealed over a tank by a suitable liquid. The lowering of the bell discharges a known volume of air through the meter under test to compare the volumes indicated. Meter provers are typically supplied to discharge volumes of 2, 5, and 10 ft^3 (0.06, 0.15, and 0.3 m^3), and larger provers of several hundred cubic foot capacity are in use by meter manufacturers and gas utility companies. The volumetric inaccuracy of meter provers is on the order of ±0.1% as determined by physical measurement and comparison with more accurate volumetric standards.

Other standards used to calibrate gas meters are calibrated orifices and critical flow nozzles. These devices compare rates of flow rather than fixed volumes and typically have inaccuracy ratings from ±0.15 to ± 0.5%.

ADVANTAGES

The chief advantages of positive-displacement flowmeters for gas applications are their high accuracy and wide rangeability. The chief disadvantages of these meters are maintenance costs and the fact that wear can degrade their performance.

Bibliography

Bailey, S. J., Fit meter to stream, flow loop for top performance, *Control Eng.*, 29(6), 87, 1982.
Beck, H. V., *Displacement Gas Meters*, Singer American Meter Div., Philadelphia, PA, 1970.
Berghegger, H. W., Diaphragm meter capacity ratings, *Gas*, 44, 51, 1968.
Bernitt, C. C., Holmes, H. H. and Stevenson, J. R., New developments in displacement metering, *Pipe Line Ind.*, 28; 29, 38, 40, July 1968.
Considine, D. M., *Encyclopedia of Instrumentation and Control*, McGraw-Hill, New York, 1971.
Crabtree, G. M., Guide to gas meters, *Pipeline & Gas J.*, undated reprint.
Delaney, L. J., Rotary and diaphragm displacement meters, *Instrum. Control Syst.*, 114, November l962.
Desmeules, M., *Fundamentals of Gas Measurement*, Canadian Meter Company, Milton, Ontario, Canada, June 1999.
Evans, H. J., *Turbo-Meters—Theory and Applications*, Rockwell International, Pittsburgh, PA, 1968.
Fluid Meters, Their Theory and Application, 6th ed., American Society of Mechanical Engineers, New York, 1971.

© 2003 by Béla Lipták

Hall, J., Flow monitoring applications guide, *Instrum. Control Syst.*, 41, February 1983.
Hall, J., Solving tough flow monitoring problems, *Instrum. Control Syst.*, February 1980.
Jasek, A. W., Mechanical displacement meter prover for gas meters, *Gas*, 41, 52, August 1967.
Lief, A., *Metering for America*, Appleton-Century-Crofts, New York, 1961.
Lomas, D. J., Selecting the right flowmeter, *Instrum. Tech.*, May 1977.
Miller, J., High Accuracy Transmitters for Custody Transfer of Natural Gas, ISA Conference, Paper #91–0520, 1991.
Miller, R., *Flow Measurement Engineering Handbook*, McGraw-Hill, New York, 1996.
O'Rourke, E. L., The select compact gas meter, American Gas Association, *Operating Section Proc.*, Arlington, VA, 1991.
Perrine, E. B., Displacement gas meters, *Instrum. Control Syst.*, 127, February 1966.
Staff, Rotary positive displacement meter, *Pipeline Eng.*, 38 (pipeline handbook), 121, March 1966.
Steuernagle, R. L., Diaphragm Meter Design & Operation, Technical papers, Appalachian Gas Measurement Short Course, Robert Morris College, Coraopolis, PA, 1990.
Upp, E. L., *Fluid Flow Measurement*, Gulf Publishing Co., Houston, TX, 1993.
Welch, J. V., Trends in low gas flow metering, *InTech*, February 1991.
Waring, T., Fundamentals of Rotary Meter Measurement, Dresser Canada, Missisauga, Ontario, Canada, June 1999.
Yoder, J., Flowmeter shootout, part I: new-technology flowmeters, *Control*, February 2001.
Yoder, J., Flowmeter shootout, part II: traditional-technology flowmeters, *Control*, March 2001.
Yoder, J., Flowmeter shootout, part III: how users choose, *Control*, April 2001.

© 2003 by Béla Lipták

2.19 Positive-Displacement Liquid Meters and Provers



Flow Sheet Symbol

R. SIEV (1969) **J. B. STODDARD** (1995) **B. G. LIPTÁK** (1982, 2003)

Types of Designs	A. Impeller, propeller, turbine B. Nutating disc C. Oval gear, C-1 if toothless D. Piston E. Rotating vane F. Viscous helix G. High-precision, specialized, low-flow, and so on H. Prover
Design Pressure	To 3000 PSIG (21 MPa)
Design Temperature	From –450°F (–268°C) to 560°F (293°C)
Strainer Required	Yes
Materials of Construction	Bronze, cast iron, aluminum, steel, stainless steel, Monel®, Hastelloy®, and plastics
Size Range	0.25 to 16 in. (6 to 406 mm)
Flow Range	From 0.01 GPH to 20,000 GPM (0.04 l/h to 75 m^3/m)
Rangeability	From 3:1 to >100:1 (for specialized designs), 10:1 about average
Inaccuracy	Ranges from ±0.1 to ±2% of actual flow; typical average error ±1/2% of actual flow, dropping as size increases
Cost	A 1 in. (25 mm) bronze disk-type water meter with 2 to 3% error costs about $750. Plastic-piston meters for laboratory applications in 1- and 2-in. (25- and 50-mm) sizes are $600 and $1200. A 1-in. (25-mm) toothless oval meter for high-viscosity service in type 316 SS is $2500. A 1-in. (25-mm) oval flowmeter for LPG service with ductile iron housing complete and valve, vapor eliminator, and register with printer, about $3000. A 2-in. (50-mm) piston meter, in steel construction, having 0.5% error and provided with register, preset valve, and ticket printer costs about $5000 to $6000. A 6-in. (150-mm) flanged, bi-rotor meter for fuel oil service with ductile iron preset valve, impulse contactor, large dial register, and ticket printer costs about $12,000 to $15,000. Prover costs range from $50,000 to $300,000 depending on size, materials of construction, and control accessories.
*Partial List of Suppliers**	Badger Meter Inc. (www.badgermeter.com) (B, D) Barton Instrument Systems LLC (www.barton-instruments.com) (A, E) Brooks Instrument (www.emersonprocess.com) (A, C, D, F, H)

* The most popular are Brooks Instrument, Smith Meter Inc., and Badger Meter Inc.

© 2003 by Béla Lipták

Cole-Parmer Instrument Co. (www.coleparmer.com) (D)
Daniel Measurement and Control (www.danielind.com) (E, H)
Dresser Instrument (www.ashcroft.com) (A)
Flow Technology Inc. (www.ftimeters.com) (H)
Kobold Instruments Inc. (www.koboldusa.com) (F, G)
Liquid Controls Inc. (www.lcmeter.com) (A, E)
Max Machinery Inc. (www.maxmachinery.com) (C, D, F)
Omega Engineering Inc. (www.omega.com) (C1)
PLU of Pierburg GmbH (www.pierburg-instruments.de) (G)
Schlumberger Measurement Div. (www.slb.com/rms/measurement) (A, B, D)
Smith Systems Inc., (www.smith-systems-inc.com) (A, C, D, E)

Positive-displacement meters split the flow of liquids into separate known volumes, the size of which are based on the physical dimensions of the meter. The meters act as counters or totalizers of the number of these volumes as they pass through. These mechanical meters have one or more moving parts in contact with the flow stream and physically separate the fluid into increments. Energy to drive the moving parts is extracted from the flowing stream itself, resulting in a pressure loss through the meter. The error of these meters depends on the clearances between the moving and stationary parts. The smaller the clearance and the longer the length of the leakage path, the better the precision of the meter. For this reason, meter accuracy tends to increase with larger meter sizes.

OVERVIEW

Positive-displacement meters for liquids are among the most widely used volumetric flow sensors for batch-size measurement applications and when fluid is bought and sold on a contract basis. A wide variety of meters, covering a broad spectrum of requirements, are available. Their good accuracy, wide rangeability, and ready availability warrant their consideration when selecting a volumetric meter.

These flowmeters are especially useful when the fluid to be measured is free of any entrained solids. A typical example is the measurement of water delivered to homes, factories, office buildings, and so forth. On the other hand, some designs are well suited for viscous liquid applications.

Wear on parts, with the resulting change in clearance dimensions, introduces the major source of error over the service life of the meter. Leakage error increases with dropping process fluid viscosity but remains relatively constant with time. In larger meters, temperature variations and the resulting change in fluid density and viscosity must also be taken into consideration.

Positive-displacement meters provide good accuracy (±0.25% of flow) and high rangeability (15:1). They are repeatable to ±0.05% of flow. Some designs are suited for high- or variable-viscosity services (up to or even exceeding 100 cSt). They require no power supplies for their operation (only for remote transmission) and are available with a wide variety of readout devices. Their performance is virtually unaffected by upstream piping configuration. Positive-displacement meters are excellent for batch processes, mixing, and blending applications.

These meters are simple and easy to maintain by regular maintenance personnel using standard tools. No specially trained crews or special calibration instruments are needed. On the other hand, because of the close tolerances of the moving parts, they are subject to wear and maintenance, and recalibration is required at frequent intervals. On corrosive services, this may result in high costs.

Positive-displacement meters require relatively expensive precision-machined parts to achieve the small clearances that guarantee their high accuracy. From this it follows that the liquids metered must be clean, because wear can rapidly destroy precision. Contaminant particle size must be kept below 100 microns, and most of these meters are not adaptable to the metering of slurries. Positive-displacement flowmeters are expensive in larger sizes or in special materials. They can be damaged by overspeeding and can require high pressure drops. In general, they are not suited for dirty, nonlubricating, or abrasive services.

ROTATING LOBE AND IMPELLER (TYPE A)

In this type of meter, two lobed impellers rotate in opposite directions within the housing (Figure 2.19a). They are geared together to maintain a fixed relative position, so a fixed volume of liquid is displaced by each revolution. A register is geared to one of the impellers. These meters are normally built for 2- to 24-in. (50- to 610-mm) pipe sizes, and their capacities (upper limits of their ranges) range from 8 to 17,500 GPM (30.4 to 66,500 l/min).

The advantages of this design include good repeatability (0.015%) at high flows, the availability of a range of materials of construction, and high operating pressures (1200 PSIG or 8300 kPa) and temperatures (400°F or 205°C).

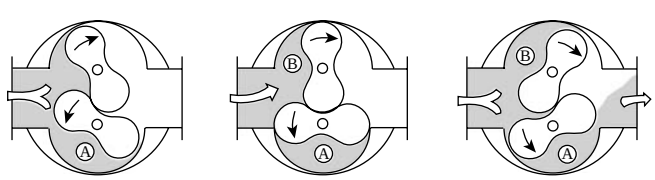

FIG. 2.19a
Rotating lobe meter.

© 2003 by Béla Lipták

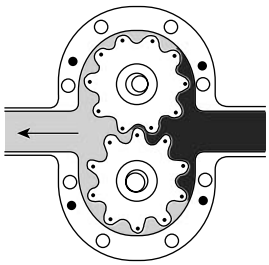

FIG. 2.19b
Rotating impeller flowmeter. (Courtesy of Flowdata Inc.)

The disadvantages include loss of accuracy at low flows because of the large size, heavy weight, and high cost.

The rotating impeller design is illustrated in Figure 2.19b. It has only two moving parts: the two impellers, which are made out of wear-, abrasion-, and corrosion-resistant thermoplastics. Operation is based on a proximity switch sensing the passage of magnets that are implanted in the impeller lobes and transmitting the resultant pulses to a counter. Units are available from 0.125- to 4-in. (3- to 100-mm) sizes with up to 3000 PSIG (21 MPa) pressure and 0 to 400°F (205°C) temperature ratings. The design is suited for high-viscosity operation, and the claimed precision and rangeabilities are also high.

NUTATING DISK (TYPE B)

The nutating disk meter is used extensively for residential water service. The moving assembly, which separates the fluid into volume increments, consists of an assembly of a radially slotted disk with an integral ball bearing and an axial pin (see Figure 2.19c). This part fits into and divides the metering chamber into four volumes—two above the disk on the inlet side and two below the disk on the outlet side. As the liquid flows through the meter, the pressure drop from inlet to outlet causes the disk to wobble, or *nutate*. For each cycle, the meter displaces a volume of liquid equal to the volume of the metering chamber minus the volume of the disk assembly. The end of an axial pin, which moves in a circular motion, drives a cam that is connected to a gear train and to a totalizing register. This flowmeter measures the liquids with an error range of about ±1 to 2% of actual flow. It is built only for smaller pipe sizes. Its temperature range is from –300 to 250°F (–150 to 120°C), and its maximum working pressure rating is 150 PSIG (1034 kPa). On cold water service, the capacity ranges are approximately as follows:

Size	*Capacity*
0.5 in. (13 mm)	2 to 20 GPM (7.5 to 75 l/min)
1 in. (25 mm)	5 to 50 GPM (19 to 190 l/min)
1.5 in. (38 mm)	10 to 100 GPM (38 to 380 l/min)
2 in. (51 mm)	16 to 160 GPM (61 to 610 l/min)

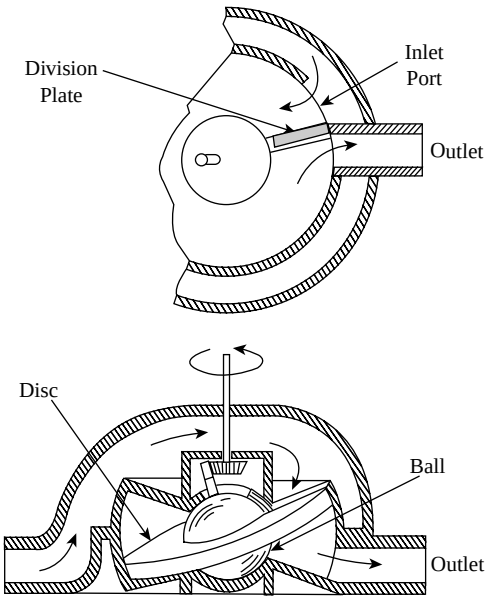

FIG. 2.19c
Nutating disk meter.

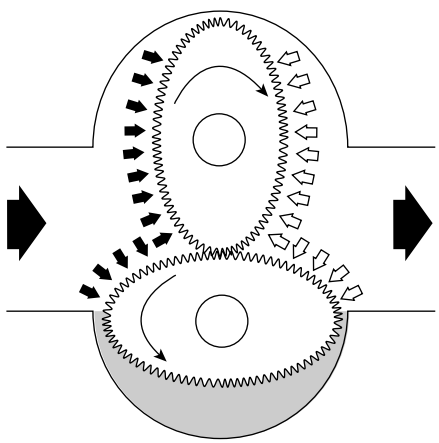

FIG. 2.19d
Oval-gear flowmeter. (Courtesy of Brooks Instrument.)

OVAL-GEAR FLOWMETERS (TYPE C)

A special variety of the rotating-lobe flowmeter is made using oval-geared metering elements. In this design, shown in Figure 2.19d, a precise volume of liquid is captured by a crescent-shaped gap, which is formed between the housing and the gear. This volume is then carried to the outlet, and this movement causes the gears to rotate an output shaft through which the register operates.

In new condition, when the slippage between the oval gears and the housing is small, and when both the flow rate and viscosity are high (>1 GPM and >10 cP, respectively), these flowmeters can operate at errors as low as 0.1% of actual flow. At lower flow rates, the relative proportion of the "slip" leakage increases, and so accuracy drops to about 0.5% of actual flow. Viscosity variations will also affect the slip flow. If a meter was

© 2003 by Béla Lipták

calibrated using water, a fluid with a viscosity of 1 cps, it will have a 1.2% high error if the viscosity rises to 100 cps.

These flowmeters are available in sizes from 0.25 to 16 in. (6 to 406 mm). When the viscosity of the process fluid is between 1.5 and 10 cps, they can handle flow ranges from 0.05 to 0.5 up to 250 to 5000 GPM (from 0.2 to 2 up to 950 to 19,000 l/min). They are available in a wide range of construction materials, including brass, carbon steel, type 316 stainless steel, and Alloy 20®. Operating pressure ratings are available up to 1450 PSIG (10 MPa) and operating temperatures up to 560°F (293°C).

The servo version of this meter has been introduced to completely eliminate slip leakage in smaller sizes (0.2 to 40 GPH or 0.8 to 150 l/h). In this design, the servomotor drives the oval-gear elements at a speed that eliminates the pressure drop across the meter and keeps the outlet pressure the same as the inlet. This eliminates the motivating force, which causes the slip flow and therefore increases accuracy at low flows or under variable viscosity conditions.

A smooth, toothless oval gear design is also available in 1-in. (25-mm) size with screwed connections. It can handle viscosities up to 100 cSt and is rated for 3000 PSIG (21 MPa) and 450°F (232°C). Its linear range is 2 to 25 GPM (7.5 to 94 l/min). If it is used with a nonlinear Hall-effect pickup, its range is claimed to increase to 0.02 to 25 GPM (0.075 to 94 l/min). The meter is made of type 316 stainless steel, its inaccuracy is within its linear range is 0.25% of actual flow, and it is provided with accessories for remote readouts, both analog and digital.

PISTON DESIGNS (TYPE D)

Reciprocating Piston

The oldest of the positive-displacement meters, this meter is available in many forms, including multi-piston meters, double-acting piston meters, rotary valves, and horizontal slide valves. Figure 2.19e shows the schematic of a reciprocating piston meter. Here, a crank arm is operated by the reciprocating motion of the pistons, and this motion drives the register. These meters are widely used in the petroleum industry and can reach the precision of ±0.2% of actual flow.

Another version of this meter is shown in Figure 2.19f. In this design, the liquid enters the cylinder on the left, forcing the piston down by lever action of the control plate. As a result, the piston on the right is forced up, discharging the liquid first into the inner portion of the valve, then down through the center of the meter and out through the meter discharge outlet.

Oscillating Piston

The moving portion of the oscillating piston meter consists of a slotted cylinder that oscillates about a dividing bridge that separates the inlet port from the outlet port. Spokes connect this cylinder to a pin located on the axis of the cylinder. As the cylinder oscillates about the bridge (Figure 2.19g) the pin makes one rotation per cycle. This rotation is transmitted to the gear train and registers either directly or magnetically through a diaphragm. This meter, in addition to being in common usage for the measurement of domestic water has the capability of handling clean viscous and/or corrosive liquids. This type of flowmeter is normally used in smaller pipelines (2 in./50 mm or below) to measure low flow rates.

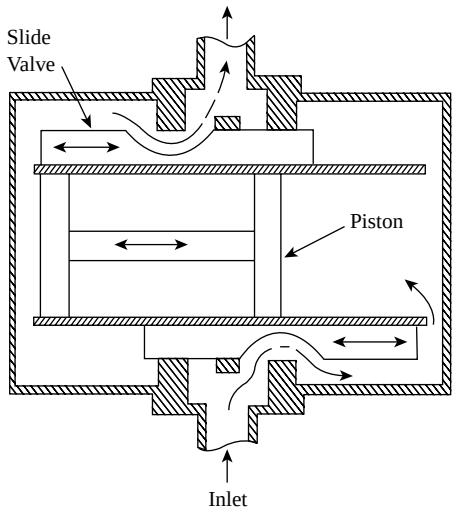

FIG. 2.19e
Reciprocating piston meter.

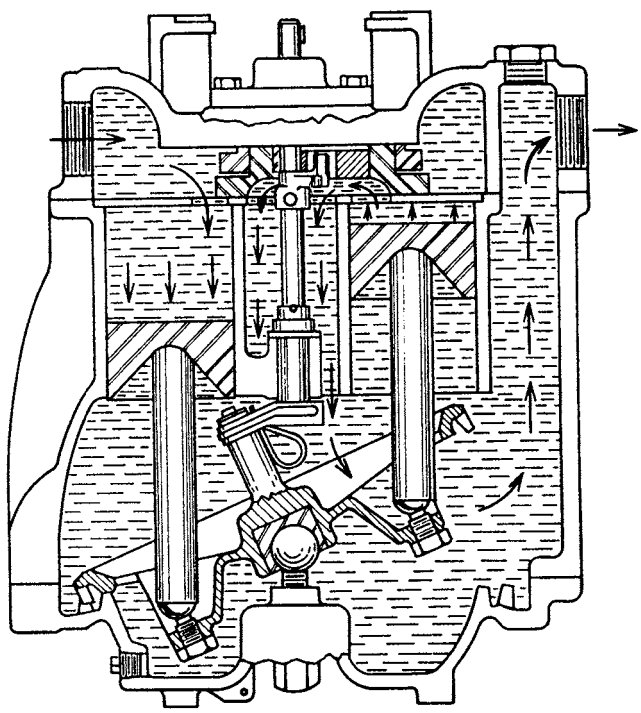

FIG. 2.19f
Cutaway of reciprocating piston meter with two opposing pistons.

© 2003 by Béla Lipták

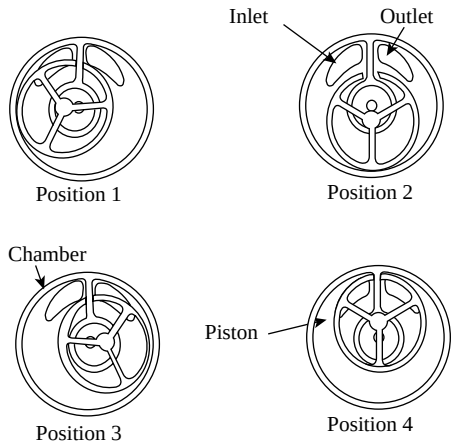

FIG. 2.19g
Oscillating piston meter.

Measurement errors are in the range of ±1% of actual flow. Metering accuracies are increased by reducing the clearance spaces to 0.002 in. (5 microns). Such small clearances do necessitate pre-filtering the entering fluid in order to remove larger particulars. The cases are usually made of cast iron, bronze, or steel, while the chamber and piston materials are usually made of bronze, aluminum, and Ni-Resist. Iron and bronze meters are good for up to 150 PSIG (1034 kPa) and 200°F (93°C), while steel meters can be used up to 400 PSIG (2760 kPa) and 300°F (149°C).

ROTATING VANE (TYPE E)

This flowmeter has spring-loaded vanes that seal increments of liquid between the eccentrically mounted rotor and the casing (Figure 2.19h) and transport it from the inlet to the outlet, where it is discharged as a result of the decreasing volume. This type of meter is widely used in the petroleum industry and is used for such varied services as gasoline and crude oil metering, with ranges from a few gallons per minute of low-viscosity clean liquids to 17,500 GPM (66.1 m^3/m, or 25,000 bbl/h) of viscous particle-laden crude oils. Precisions of ±0.1% of actual flow are normal, and ±0.05% has been achieved in the larger meters.

This instrument is built from a variety of materials and can be used at temperatures and pressures up to 350°F (177°C) and 1000 PSIG (6.9 MPa).

Another rotary design is illustrated in Figure 2.19i. Here, an abutment rotor operates in timed relation with two displacement rotors and at half their speed.

VISCOUS HELIX (TYPE F)

The helix flow transducer (Figure 2.19j) is a positive-displacement device utilizing two uniquely nested, radically pitched helical rotors as the measuring elements. Close machining tolerances ensure minimal slippage and thus high

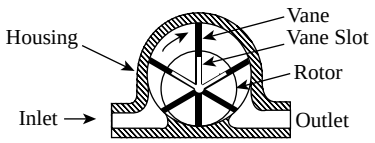

FIG. 2.19h
Rotating-vane meter.

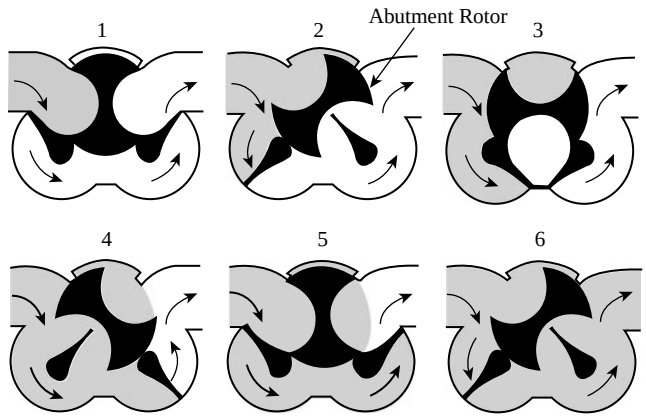

FIG. 2.19i
Six-phase metering cycle of a rotary displacement-type flowmeter.

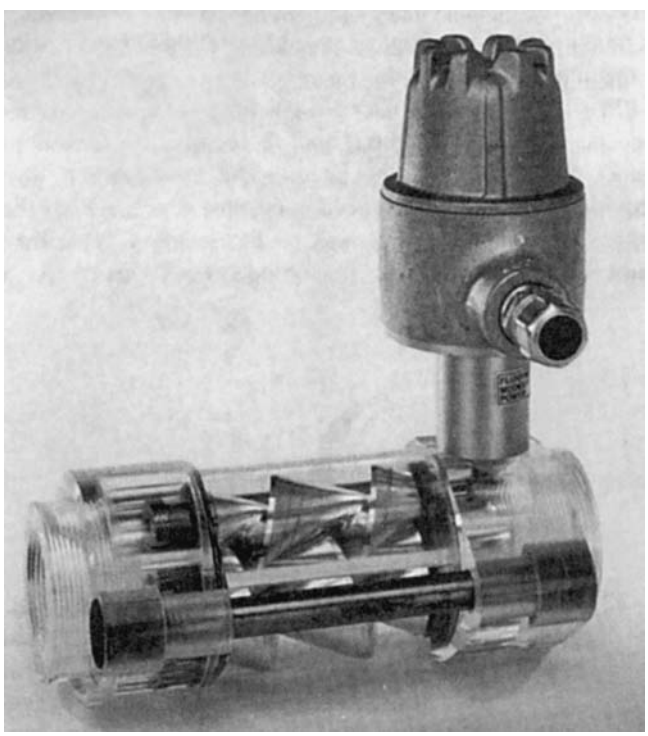

FIG. 2.19j
Viscous helix flowmeter. (Courtesy of Fluidyne Instrumentation.)

accuracy. The design of the sealing surfaces provides a ratio of longitudinal to lateral sealing to minimize pressure drop, especially with high-viscosity liquids.

The large inlet size of the progressive cavity allows for the passage of gels, fines, agglomerates, and even undissolved

© 2003 by Béla Lipták

or hydraulically conveyed solids. The meter can measure flow rates from 0.5 to >4000 GPM (2 to 15,000 l/min). This flow sensor is available in sizes from 1.5 in. to 10 in. (38 to 250 mm) and can operate at temperatures up to 600°F (315°C) and at pressures up to 3000 PSIG (21 MPa). It is a high-pressure-drop device requiring a minimum of 10 PSID (69 kPa) for its operation at full flow. Its turndown can reach 100:1, and its metering error is claimed to be under 0.5% of actual flow.

Available design variations include versions that are heated to maintain line temperatures for metering melted solids or polymers. Also available are units in sanitary construction. This meter is suited for high-viscosity (over 1000 cps) and for slurry services. The straight-through design with no pockets is also available to simplify cleaning. It is recommended that the process fluids be filtered by mesh size 30 filters before they enter this flowmeter.

HIGH-PRECISION AND SPECIALIZED (TYPE G)

For the high-precision measurement of fuel and alcohol flows in engine and carburetor test rigs and other applications, specialized positive-displacement flowmeters are often used. Their high precision and high rangeability are achieved by eliminating the pressure drop and thereby eliminating the slip or leakage flows. This is achieved by providing a motor drive for the displacement element and using it to introduce as much pumping energy as is needed to equalize the pressures at the inlet and outlet of the meter (Figure 2.19k). This flowmeter uses a high-sensitivity piston to detect the pressure differential and utilizes photoelectric sensors to detect the position of the piston. The flowmeter is also provided with a variable-speed controller, which adjusts the drive speed whenever the pressure differential is other than zero. Because the response time of the system is less than 0.5 sec, the flowmeter is able to follow most dynamic flow transients or can be used on short-duration tests.

This flowmeter is claimed to provide a reading with only 0.25% error over a 50:1 range and a 0.5% error over a 100:1 range. The meter is designed for ambient operating temperatures and for up to 150 PSIG (10 bars) operating pressures. The different models of this flowmeter can detect diesel, gasoline, and alcohol flows from 0.04 to 40 GPH (0.15 to 150 l/h). Because vapor lock is a common problem in fuel flow metering, the unit is provided with a vapor separator.

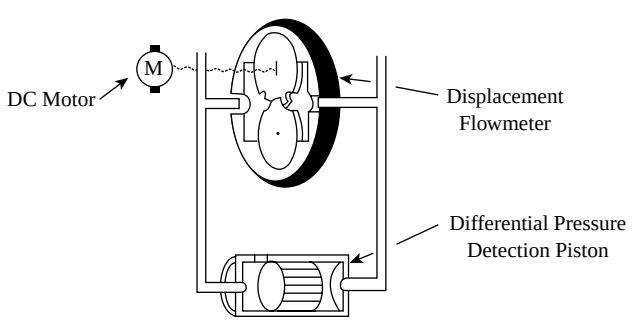

FIG. 2.19k
High-precision positive displacement flowmeter. (Courtesy of PLU, Pierburg GmbH.)

PROVERS (TYPE H)

All flowmeters that consist of moving and stationary parts that rub against each other (such as positive-displacement and turbine type flowmeters) require periodic recalibration. This is necessary because the clearance space and the slip or clearance flow through that space increase with wear. Recalibration can be done by removing the flowmeter from the pipeline and sending it to a calibration laboratory, or it can be done in line. The flow provers that allow for inline recalibration without interruption of the process flow are described below.

As shown in Figure 2.19l, provers consist of a smooth-walled, precalibrated displacement chamber and a barrier piston within it. Usually, a follower rod is attached to the back side of the piston, which is connected to position sensors. The calibrated flow rate is obtained by dividing the volume of the prover with the time it takes to displace its volume. This calibrated flow rate is then compared to the reading of the flowmeter being calibrated.

To minimize the disturbance to the process flow, inline ballistic flow provers have been developed. In these units (Figure 2.19l), the piston is constructed so that it will not disrupt the flow in the line. Therefore, the prover can be permanently installed in an operating pipeline, upstream or downstream of the flowmeter being calibrated. The poppet valve within the piston assembly allows for the piston to be withdrawn to the start position after a calibration run while the process flow continues undisturbed. Both portable (Figure 2.19m) and permanently installed provers are available, and the calibration can be manual or automatic.

The repeatability of provers is around 0.02% of the actual flow if the seals are tight. It is recommended to periodically check the seals by closing a tight shutoff valve downstream of the prover and applying nitrogen pressure to the upstream

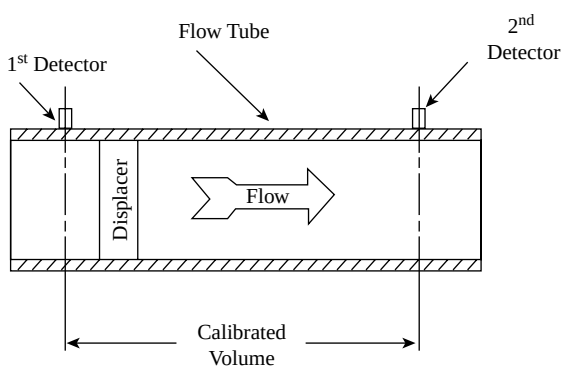

FIG. 2.19l
Prover operation.

© 2003 by Béla Lipták



Skid mounting for
truck bed use



Vertical Mount



Skid mounting for
ease of portability

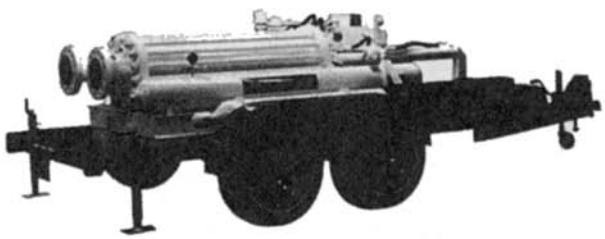

Skid/Trailer use
Two Axle

FIG. 2.19m
Portable prover assemblies. (Courtesy of Brooks Instrument.)

face of the piston. If this results in any movement of the piston, the seals need maintenance. Provers are available for up to 3000 PSIG (21 MPa) operating pressure and 165°F (74°C) operating temperature; they can detect flow rates from 0.001 GPM (0.004 l/min) to 20,000 GPM (75,000 l/min). The calibrated displacement volume of provers can range from a fraction of a gallon to several hundred gallons. Large provers can fit on truck beds or trailers (Figure 2.19m).

ACCESSORIES AND INTELLIGENT ELECTRONICS

Standard accessories for positive-displacement include strainers; air release assemblies, which remove all the vapors from the flow stream before it enters the meter; automatic batch shutoff valves, which provide two-stage closure for full and dribble flow operation; temperature compensators; manual and/or automatic ticket printers; and pulse generators for remote indication, totalization, and other forms of data monitoring and/or control. In addition to the totalizer-type digital readout registers, flow rate indication can also be provided. Impulse contactors are also available to actuate predetermining counters or to serve as electrical interlocks that actuate flow ratio systems, pumps, valves, solenoids, alarms, printers, sampling devices, and so on. Pneumatic pulse generators are still available and sometime used in explosion-proof areas for interfacing with pneumatic batch controllers.

The intelligent positive-displacement meters are usually provided with magnetic or Hall-effect-type pickup and frequency outputs from solid-state pulse transmitters. The frequency outputs can be sent to central computers or DCS/PLC systems over the data highways and can also be converted to 0- to 10-VDC or 4- to 20-mA analog signals.

In household utility applications, there is substantial economic justification for substituting a telemetering system, operated either on the telephone lines or by radio, replacing the current system (human meter readers). It is also feasible to combine the readings of electric, water, and gas meters of a household into a single transmitter and to transmit that information to the appropriate utilities without the need for a meter reader to visit the home or apartment. The economic advantages of this type of metering is not only in labor savings but also in the speed and frequency at which the data can be obtained and used for billing or other purposes.

Bibliography

Baker, R. C., *Flow Measurement Handbook*, Cambridge University Press, UK, 2000.

Barnes, G., Pipeline metering with liquid positive displacement, *Adv. in Instrum.*, 39, ISA, 1984.

Blasso, L., Flow measurement under any conditions, *Instrum. Control Syst.*, February 1975.

Clark, W. J., *Flow Measurement*, Pergamon Press, New York, 1967.

© 2003 by Béla Lipták

Cushing, M., The future of flow measurement, *Flow Control*, January 2000.
Desmeules, M., *Fundamentals of Gas Measurement*, Canadian Meter Company, Milton, Ontario, Canada, June 1999.
Eren, H., Flowmeters, *Survey of Instrumentation and Measurement*, S.A. Dyer, Ed., John Wiley & Sons, New York, 2001.
Francisco, E. E., Flowmeter proving using the dynamic transfer technique, *Meas. Control*, April 1993.
Furness, R. A., Developments in pipeline instrumentation, *Pipe Line Rules of Thumb Handbook*, 4th ed., Gulf Publishing, Houston, TX, 1998.
Hall, J., Solving tough flow monitoring problems, *Instrum. Control Syst.*, February 1980.
Hayward, A. J., Choose the flowmeter right for the job, *Process. J.*, 1980.
Hendrix, A. R., Positive displacement flowmeters, *InTech*, December 1982.
Husain, Z. D., Flowmeter Calibration and Performance Evaluation, ISA Conference, Paper #91–0508, 1991.
Ifft, S. A., *Custody Transfer Flow Measurement with New Technologies*, Saudi Aramco, Saudi Arabia, 1999.
Laskaris, E. K., The measurement of flow, *Automation*, 1980.
Lipták, B. G., Flow measurement trends, *Control*, June 2000.
Lomas, D. J., Selecting the right flowmeter, *Instrum. Tech.*, 1977.
Positive displacement flowmeters, *Meas. Control*, October 1991.
Miller, R. W., *Flow Measurement Engineering Handbook*, 3rd ed., McGraw-Hill, New York, 1996.
Renda, L., Flowmeter calibration, *Meas. Control*, February 1993.
Spink, L. K., *Principles and Practice of Flow Engineering*, 9th ed., The Foxboro Co., Invensys Systems, Inc., Foxboro, MA, 1967.
Spitzer, D. W., *Flow Measurement*, 2nd ed., ISA, Research Triangle Park, NC, 2001.
Spitzer, D. W., What affects flowmeter performance, *InTech*, February, 1993.
Watson, G. A., Flowmeter types and their usage, *Chartered Mech. Eng. J.*, 1978.
Waring, T., *Fundamentals of Rotary Meter Measurement*, Dresser Canada, June 1999.
Yoder, J., Flowmeter shootout, part I and II: new technologies, *Control*, February and March 2001.

© 2003 by Béla Lipták

2.20 Purge Flow Regulators

E. L. SZONNTAGH (1995) **B. G. LIPTÁK** (2003)

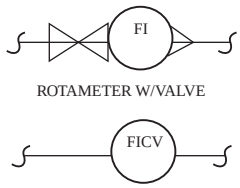

Flow Sheet Symbol

Applications	Purge flow regulators serve the regulation of low flow rates of air, gas, or liquids. They are most often used in air bubblers or in purging electrical housings (in explosion-proof areas) and in purging optical windows of smokestack analyzers. Water and liquid purge meters are most often applied to protect process connections from plugging.
Purge Fluids	Air, nitrogen, and liquids
Operating Pressure	Up to 450 PSIG (3 MPa)
Operating Temperature	For glass tube, up to 200°F (93°C)
Ranges	Range is from a minimum of 0.01 cm^3/min for liquids and from 0.5 cm^3/min for gases. A 0.25-in. (6-mm) glass tube rotameter can handle 0.05 to 0.5 GPM (0.2 to 2 l/min) of water or 0.2 to 2 SCFM (0.3 to 3 cmph) of air.
Inaccuracy	Generally, 2 to 5% of range (laboratory units are more accurate)
Costs	A 150-mm glass-tube unit with 0.125-in. (3-mm) threaded connection, in type 316 stainless steel, and a 16-turn high-precision valve will cost about $300; the same with an aluminum frame and a standard valve is about $125. Adding a differential-pressure regulator of brass or aluminum construction costs about an additional $150 (in stainless steel, about $500). For highly corrosive services, all-Teflon®, all-PTFE, all-PFA, and all-CTFA units are available that, when provided with valves, cost from $500 with 0.25-in. (6-mm) to $1500 with 0.75-in. (19-mm) connections.
Partial List of Suppliers	Aalborg Instruments & Controls Inc. (www.aalborg.com) ABB Automation Instrumentation Division (www.abb.com/us/instrumentation) Blue-White Industries (www.bluwhite.com) Brooks Instrument (www.emersonprocess.com) Cole-Parmer Instrument Co. (www.coleparmer.com) Dwyer Instruments Inc. (www.dwyer-inst.com) Key Instruments (www.keyinstruments.com) King Instrument Co. (www.kinginstrument.co.com) Krohne Inc. (www.krohne.com) Matheson Instruments (www.mathesoinstruments.com) Omega Engineering Inc. (www.omega.com) Penberthy (www.penberthy-online.com) USFilter/Wallace & Tiernan Products (www.wallaceandtiernan.usfilter.com)

Purge flows are low flow rates of either gases or liquids. They serve to protect pressure taps from plugging or being contacted by hot or corrosive process fluids. Inert gas purging can also serve to protect electrical devices from becoming ignition sources by maintaining a positive pressure of incombustible gases inside their housings. In the case of analyzers, purging protects the cleanliness of the optics.

DETECTION OF LOW FLOWS

The low flow rates of purge media can be detected by a variety of devices. They include capillaries, miniature orifices, metering pump, positive-displacement, thermal, and variable-area-type flow sensors. Most of these devices are detailed in other sections of this chapter. Capillary flow elements (Section 2.9)

© 2003 by Béla Lipták

are ideal for the measurement of low flow rates. They can also be combined with thermal flowmeters to provide flow regulators with higher precision and higher rangeability—but also higher cost (Section 2.13). Integral orifices (Section 2.15) can also be used in both gas and liquid flow measurement, whereas positive-displacement meters and metering pumps are most often used to detect the flows of liquids (Sections 2.14 and 2.19). In addition, the second volume of the *Instruments Engineers' Handbook* ("Process Control") includes a section that describes self-contained flow regulators.

Only one purge flow regulator design is not covered in other parts of this three-volume handbook: the rotameter-type purge meter. This is the least expensive and most widely used purge meter design, and it is described in this section.

PURGE ROTAMETERS

Purge flowmeters are widely used devices and are probably the most widely used form of the variable-area flowmeter, the rotameter. These meters are inexpensive and are intended for the measurement and control of low flow rates. Most purge meters are used on inert gas or water services at low flow rates, where measurement accuracy is not critical. These units are reasonably repeatable, which is all that is required in many purge applications where, as long as a low flow rate is maintained, it is not critical to know how much it is. The flow rates through the purge meters are adjusted by needle-type throttling valves as shown in Figure 2.20a.

The metering needle valves are usually multiple-turn units provided with long stems. The opening around their needle-shaped plugs is very small and can approach capillary dimensions. Figure 2.20b shows a high-precision needle valve provided with a vernier-type scale that allows a more accurate setting of the valve opening. The dual scale increases the precision and reproducibility of setting by subdividing the smallest reading of the first scale onto the second. The flow rate through these devices is a function of the opening in the valve, the pressure differential across that opening, and both the density and the viscosity of the purge media. Table 2.20c provides information on the density and viscosity of a number of purge gases.

When the purge flowmeter is combined with a differential-pressure regulator (Figure 2.20d), it becomes a self-contained flow controller. The purge flow is fixed by adjusting springs 1 and 2 for a particular pressure difference, usually in the range of about 60 to 80 in. (150 to 200 cm) of water. This constant pressure drop ($P_2 - P_o$) is than maintained across

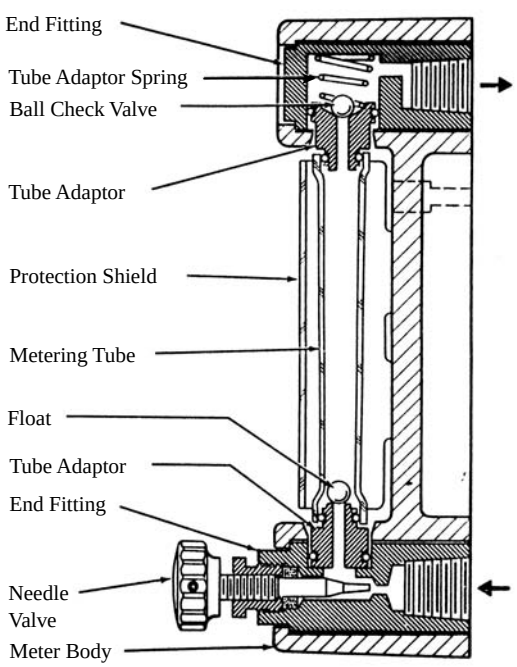

FIG. 2.20a
Purge rotameter with integral needle valve.

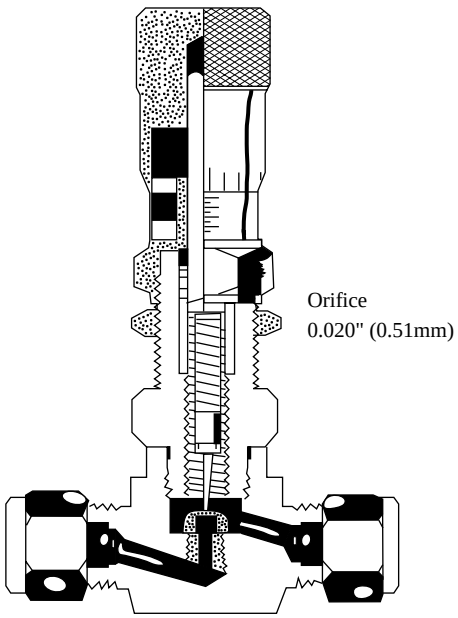

FIG. 2.20b
Fine-adjustment needle valve with vernier scale. (Courtesy of Swagelok Co.)

TABLE 2.20c
Gas Properties under the Standard Conditions of 29.92 in. of Mercury and 70°F (760 mm of Mercury and 21°C)

Gas	*Density (lb/ft^3)*	*μ Viscosity Micropoises*	*Specific Gravity*
Air	0.0749	181.87	1.000
Argon	0.1034	225.95	1.380
Helium	0.0103	193.9	0.138
Hydrogen	0.0052	88.41	0.0695
Nitrogen	0.0725	175.85	0.968
Oxygen	0.0828	203.47	1.105
Carbon Dioxide	0.1143	146.87	1.526

© 2003 by Béla Lipták

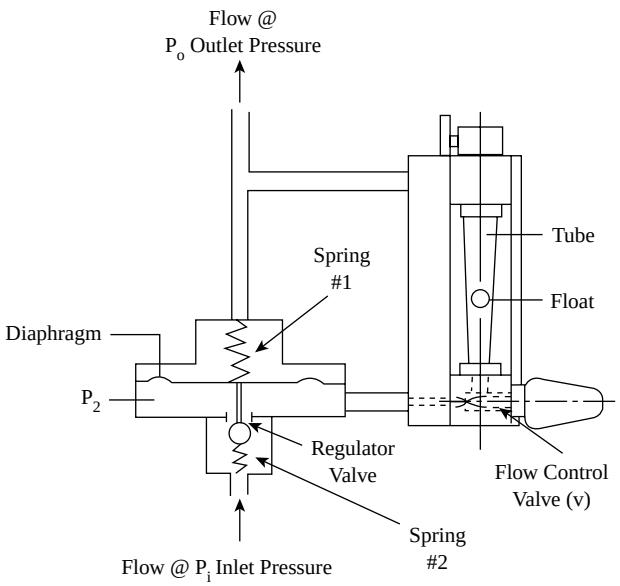

FIG. 2.20d

Purge flow regulator consisting of a glass tube rotameter, an inlet needle valve, and a differential pressure regulator. (Courtesy of Krone Inc.)

the flow control valve (V). The configuration in Figure 2.20d maintains the outlet pressure (P_o) constant by compensating for any variation in the inlet pressure P_i by changing the regulator valve opening.

Other purge flowmeter designs are also available that work in a reverse configuration by keeping the inlet pressure P_i constant and allowing the outlet P_o to vary. In these designs, the constant pressure drop across the valve (V) is maintained to equal ($P_i - P_2$) instead of ($P_2 - P_o$) being kept constant. The gas flows through purge flow controllers are usually adjustable in a range of 0.2 to 2 SCFH (6 to 60 slph). The error or inaccuracy is usually 5% of full scale over a range of 10:1. The standard pressure and temperature ratings are 150 to 300 PSIG (1 to 2 MPa) and 212 to 572°F (100 to 300°C).

Bibliography

Baker, R. C., *Flow Measurement Handbook*, Cambridge University Press, UK, 2000.

Blasso, L., Flow measurement under any conditions, *Instrum. Control Syst.*, February 1975.

Cheremisinoff, N. P., *Fluid Flow*, Ann Arbor Science Publishers, Ann Arbor, MI, 1982.

Cross, D. E., Rotameter calibration nomograph for gases, *Instrum. Tech.*, 53–56, April 1969.

Cushing, M., The future of flow measurement, *Flow Control*, January 2000.

Des Marais, P. O., Variable-area meter for viscous service, *Instrum. Control Syst.*, August 1961.

Desmeules, M., *Fundamentals of Gas Measurement*, Canadian Meter Company, Milton, Ontario, Canada, June 1999.

Factory Mutual Loss Prevention Data Sheet 7–59, Inserting and Purging of Tanks, Process Vessels and Equipment, Norwood, MA, 1977.

Hall, J., Solving tough flow monitoring problems, *Instrum. Control Syst.*, February 1980.

Instrument Society of America, Recommended Practices RP16.1, RP16.2, RP16.3, RP16.4, RP16.5, and RP16.6. (These documents deal with the terminology, dimensions, installation, operation, maintenance, and calibration of rotameters.)

Lomas, D. J., Selecting the right flowmeter, *Instrum. Tech.*, May 1977.

Miller, R. W., *Flow Measurement Handbook*, 3rd ed., McGraw-Hill, New York, 1996.

Polentz, L. M., Theory and operation of rotameters, *Instrum. Control Syst.*, June 1961.

Purging Principles and Practices, Report XK0775, American Gas Association, Washington, DC, 1990.

Rotameters/variable-area flowmeters, *Meas. Control*, September 1991.

Spitzer, D. W., *Flow Measurement*, 2nd ed., ISA, Research Triangle Park, NC, 2001.

Standard on Explosion Prevention Systems, NFPA 96, National Fire Prevention Association, Boston, MA.

Standard on Purged and Pressurized Enclosures for Electrical Equipment, NFPA 496, National Fire Prevention Association, Boston, MA.

Sydenham, P. H. et al., *Introduction to Measurement Science and Engineering*, John Wiley & Sons, Chichester, England, 1989.

U.S. Chemical Safety and Hazard Investigations Board, Summary Report on Accident at Union Carbide Hahnville Louisiana Plant, Report PB99–159972, Washington, DC, 1998.

Waring, T., *Fundamentals of Rotary Meter Measurement*, Dresser Canada, June 1999.

Yoder, J., Flowmeter shootout, part I and II: new technologies, *Control*, February and March 2001.

© 2003 by Béla Lipták

2.21 Segmental Wedge Flowmeter

B. G. LIPTÁK (1995, 2003)

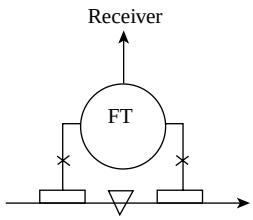

Flow Sheet Symbol

Applications	Clean, viscous (down to Rd no. = 500) solids containing fluids, gas, and steam
Sizes	0.5- to 24-in. (12- to 610-mm) diameter pipes
Designs	In the smaller sizes (0.5 to 1.5 in.), the wedge can be integral; for larger pipes, remote seal wedges are used with calibrated elements
Wedge Opening Height (H)	From 0.2 to 0.7 of pipe inside diameter
Pressure Drops	25 to 200 in. H_2O (6.2 to 49.8 kPa)
Materials of Construction	Carbon, type 316 SS, Hastelloy®, Monel® wetted parts; special wedge materials like tungsten carbide are also available. Sealing gasket can be silicate ceramic filled TFE. Chemical tee gasket up to 645°F (340°C) can be graphite.
Design Pressure	300 to 1500 PSIG (20.7 to 103 bars) with remote seals, up to 3000 PSIG (21,000 kPa) in 1-in. size and below
Design Temperature	In sizes 1.5 in. and below, 300°F (148.9°C); higher temperature designs are available from –40 to 700°F (–40 to 370°C) but have been used in higher-temperature processes up to 850°F (454°C).
Inaccuracy	Error, if uncalibrated, is 5% of actual flow. When the elements are individually calibrated, the error drops to 0.5 to 0.75% of actual flow; to this one should add the d/p cell error contribution of about 0.25% of full scale. The total error over a 3:1 flow range is usually not more than 2% of actual flow
Cost	A 3-in. (75-mm) calibrated stainless-steel element with two stainless chemical tees and with an electronic d/p transmitter provided, and provided with remote seals, is about $4000.
Partial List of Suppliers	ABB Automation Instrumentation Division (www.abb.com/us/instrumentation)

The shape of the flow opening of a segmental wedge flowmeter is similar to that of a segmental orifice except that the obstruction to flow is less abrupt (more gradual). Also, the sloping entrance somewhat resembles the shape of the various flow tubes.

The wedge flowmeter was primarily designed for slurry applications. Its main advantage is its ability to operate at Reynolds numbers as low as 500 to 1000.[1] This is in contrast with sharp-edged orifices, venturies, and flow nozzles, where the square root relationship between flow and pressure drop requires a Reynolds number well above 10,000 (see Figure 2.1f). For this reason, wedge flowmeters can measure low-velocity and viscous fluid flows. In this regard, the wedge flowmeter capability is similar to that of the conical or quadrant edge orifices.

For pipe diameter sizes under 2 in. (50 mm), the segmental wedge flow element is made by cutting a V-notch into the pipe and accurately welding a solid wedge in place. In sizes over 2 in., the wedge is fabricated from two flat plates that are welded together before insertion into the spoolpiece (Figure 2.21a). On clean services, regular pressure taps are used and located equidistant from the wedge (Figure 2.21a). On viscous or dirty services, or on applications where the process fluid contains solids in suspension, "chemical tees" are installed upstream and downstream of the wedge flow element (Figure 2.21b).

© 2003 by Béla Lipták

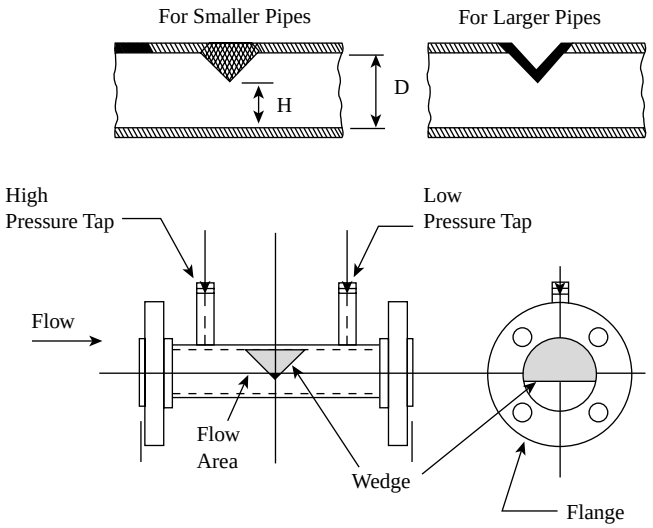

FIG. 2.21a
The segmental flowmeter designed for clean fluid service.[1,2]

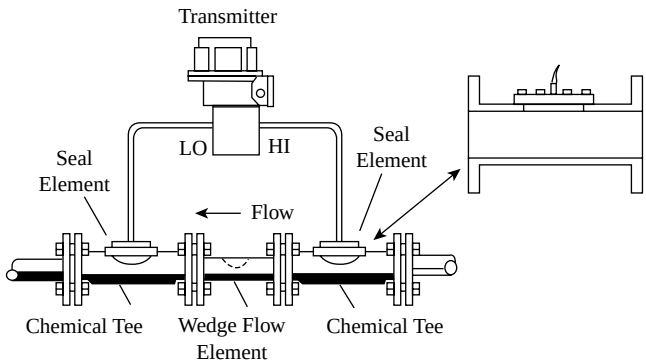

FIG. 2.21b
Segmental wedge flowmeter designed for corrosive or slurry service.[1]

TABLE 2.21c
Segmental Wedge Flowmeter Capacities in GPM Units (Courtesy of ABB Instruments – previously ABB Kent-Taylor)*

		Approximate Differential Pressure Inches H_2O					
Pipe Size	*H/D*†	*20 in.*	*40 in.*	*60 in.*	*100 in.*	*120 in.*	*160 in.*
1 in.	0.2	3.43	4.80	5.90	7.66	8.40	9.70
	0.3	5.75	8.14	9.95	12.9	14.1	16.3
	0.4	8.30	11.7	14.4	18.6	20.4	23.4
	0.5	11.0	15.6	19.1	24.6	27.0	31.2
1–1/4 in.	0.2	6.80	9.70	11.9	15.8	16.8	19.4
	0.3	12.8	18.2	22.2	28.7	31.4	36.4
	0.4	22.7	32.1	39.3	50.7	55.5	64.2
	0.5	32.2	45.5	55.8	72.0	79.0	91.0
2 in.	0.2	12.2	17.2	21.1	27.2	29.9	34.6
	0.3	20.3	28.7	35.2	45.4	49.7	57.5
	0.4	34.0	48.0	58.9	76.0	83.4	96.3
	0.5	50.9	72.0	88.0	114.0	125.0	144.0
3 in.	0.2	26.4	37.4	45.6	59.0	64.6	74.6
	0.3	44.5	62.5	77.0	99.5	109.0	126.0
	0.4	75.5	107.0	131.0	169.0	185.0	214.0
	0.5	113.0	160.0	196.0	252.0	277.0	320.0
4 in.	0.2	49.5	70.0	86.0	111.0	121.0	140.0
	0.3	76.1	108.0	132.0	170.0	187.0	216.0
	0.4	127.0	180.0	220.0	284.0	311.0	360.0
	0.5	192.0	272.0	332.0	430.0	470.0	544.0
6 in.	0.2	86.4	122.0	150.0	193.0	212.0	244.0
	0.3	185.0	262.0	320.0	414.0	454.0	524.0
	0.4	294.0	416.0	509.0	657.0	720.0	831.0
	0.5	444.0	628.0	768.0	994.0	1089.0	1255.0
8 in.	0.2	173.0	244.0	300.0	388.0	425.0	490.0
	0.3	311.0	440.0	539.0	695.0	761.0	880.0
	0.4	475.0	671.0	824.0	1060.0	1165.0	1340.0
	0.5	659.0	930.0	1140.0	1470.0	1610.0	1860.0

*The units in the table can be converted as follows: 1.0 in. H_2O = 249 Pa, 1.0 GPM = 3.785 lpm, 1.0 inch = 25.4 mm.
†The H/D values shown above represent ratios between segmental opening height and the pipe diameter (Fig. 2.21a).

© 2003 by Béla Lipták

On these tees, chemical seal elements are installed flush with the pipe, eliminating pockets and making the installation self-cleaning. The seals are usually made of corrosion-resistant materials and are also suited for high-temperature services. Some applications have been reported in which the operating conditions reached 3000 PSIG (210 bars) and 850°F (454°C).[2]

The segmental wedge flowmeters are usually calibrated on water. The pressure drop detected by d/p transmitter is interpreted on the basis of these calibration curves. The measurement error is a function of the precision of the calibration and some users report performance on slurry service within 2.5 and 3.5% of actual flow.[2] The flow capacities of these sensors are listed in Table 2.21c.

Based on the above, one might conclude that the segmental wedge flowmeter fills the need for corrosion-resistant slurry flowmeters that are capable of operating at high process pressures and temperatures, but only if the accuracy and rangeability requirements for the measurement are not high.

References

1. Owen, R. E., S*egmental Wedge Flow Element,* ABB Kent-Taylor, Newcastle upon Tyne, UK.
2. Malone, D. P., Slurry flow measurement: a case history, *InTech*, November 1985.

Bibliography

Baker, R. C., *Flow Measurement Handbook*, Cambridge University Press, UK, 2000.
Cushing, M., The future of flow measurement, *Flow Control*, January 2000.
De Boom, R. J., Flow Meter Evaluation, ISA Conference, Paper #91-0509, 1991.
Differential pressure flowmeters, *Meas. Control*, September 1991.
Furness, R. A., Developments in pipeline instrumentation, *Pipe Line Rules of Thumb Handbook*, 4th ed., Gulf Publishing, Houston, TX, 1998.
Hall, J., Flow monitoring applications guide, *Instrum. Control Syst.*, 41, February 1983.
Husain, Z. D., Flowmeter Calibration and Performance Evaluation, ISA Conference, Paper #91-0508, 1991.
Krigman, A., Flow measurement: some recent progress, *InTech*, April 1983.
Krigman, A., Guide to selecting non-intrusive flowmeters, *InTech*, December 1982.
Lipták, B. G., Flow measurement trends, *Control*, June 2000.
Miller, R. W., *Flow Measurement Engineering Handbook*, 3rd ed., McGraw-Hill, New York, 1996.
Rusnak, J., The fundamentals of flowmeter selection, *InTech*, April 1989.
Spitzer, D. W., *Flow Measurement*, 2nd ed., ISA, Research Triangle Park, NC, 2001.
Yoder, J., Flowmeter shootout, part I and II: new technologies, *Control*, February and March 2001.

© 2003 by Béla Lipták

2.22 Sight Flow Indicators

FG

Flow Sheet Symbol

D. S. KAYSER (1982) **B. G. LIPTÁK** (1995) **G. G. SANDERS** (2003)

Design Pressure	To ANSI 600# standard (≈1400 PSIG [9.6 MPaG] material dependent)
Design Temperature	To 500°F (260°C) standard
*Materials of Construction**	Windows: soda-lime glass, tempered or annealed borosilicate glass, aluminosilicate glass, quartz, polycarbonate, acrylic Body: bronze, iron, carbon steel, stainless steel, duplex steel, Monel®, Hastelloy®, Alloy 20® Cb-3, and so forth Gasketing: Buna-N, Viton®A, Neoprene®, polyethylene, polypropylene, PTFE, graphite, fibrous, PTFE sandwiched fibrous, and so on
Sizes	0.25 to 16 in. NPS/BSP/DIN/JIS
Cost	A 0.25-in. NPS bronze/brass unit with PTFE rotator is $175; 1-in. NPS all-stainless, screwed unit is $440, with flanged connections, $600
Partial List of Suppliers	Archon Industries Inc. (www.archonind.com) Brooks Instrument Div. of Emerson (www.emersonprocess.com) Dwyer Instruments Inc. (www.dwyer-inst.com) Eugene Ernst Products Co. (www.eepproducts.com) John C. Ernst Co. (www.johnernst.com) ERDCO Engineering Corp. (www.erdco.com) Jacoby Tarbox (www.clark-reliance.com) The Johnson Corp. (www.joco.com) Kenco Engineering (www.kenco-eng.com) Kobold Instruments Inc. (www.koboldusa.com) OPW Engineered Systems (www.opw-es.com) J. G. Papailias Co. (www.papailias.com) Penberthy-Tyco Valves and Controls LP (www.tycovalves.com) Plast-O-Matic Valves Inc. (www.plastomatic.com) Pressure Products Company Inc. (www.pressureproducts.com) Schutte and Koerting (www.s-k.com) L.J. Star Inc. (www.ljstar.com) Tokheim Corp. (www.tokheim.com)

Sight flow indicators (SFIs, a.k.a. flow glasses) provide a window into a pipe when visual inspection of a process fluid is necessary. Figure 2.22a shows five standard designs.

DESIGN VARIATIONS

The plain design is used to observe physical characteristics of the process fluid; it is not meant to provide full pipe flow indication. Four types of indicating devices are incorporated when flow indication is desired. A metallic flapper design is used in transparent or slightly opaque liquids, and a lightweight polymer/glass flapper is for low-flow gaseous service. Flow direction must be vertically upward or horizontal. Some indication of relative flow velocity can be made by observing the angular position of the flapper; some manufacturers place decals on the window that approximate flow quantity (based on impact force × area) (Figure 2.22b). Bidirectional flappers are hinged in the center of the SFI body

* Registered trademarks of Inco Alloys International Inc., Hayes International Inc., Carpenter Technology Corp., and E.I. du Pont de Nemours & Co. are noted by ®.

© 2003 by Béla Lipták

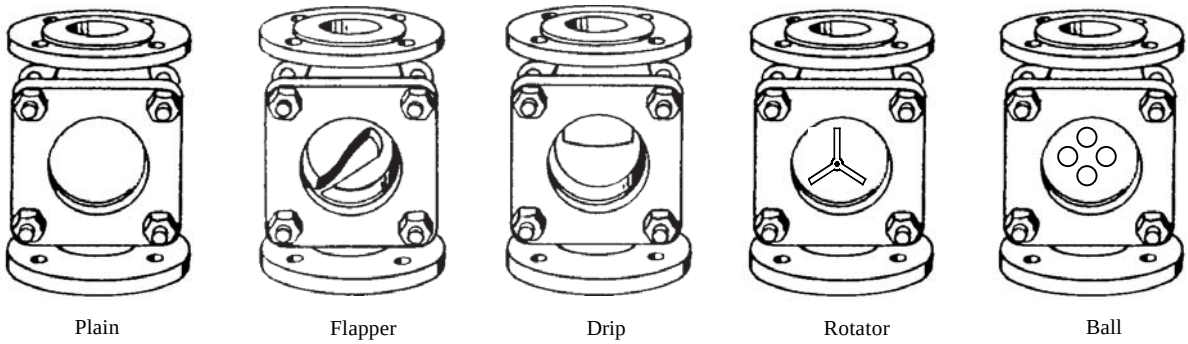

FIG. 2.22a
Basic sight flow indicator and four types of flow indicators.

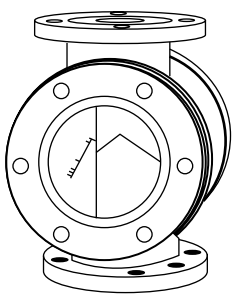

FIG. 2.22b
Flapper-type sight glass provided with a scale for approximation of flow.

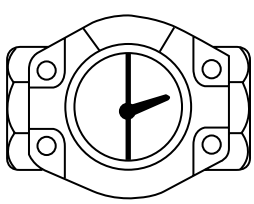

FIG. 2.22c
Bidirectional flapper. (Courtesy of Dover Corp., OPW Div.)

(Figure 2.22c) for horizontal use only. The drip-tube design is used for intermittent or extremely slow flows such as distillation; flow direction should be vertically downward or horizontal. The rotator (a.k.a., propeller, paddle, or paddle-wheel, usually made of white virgin PTFE) is used with dark or opaque process fluids. The rotator is placed close to the window, and its motion is easily detected. Flow through the rotator design may be in any orientation. Very high flow rates will rapidly destroy a rotator, so it is advisable to oversize the SFI (to reduce flow velocity) or use a different indicator if high flow rates are likely. Caged balls provide an indicator that is more sensitive to low flow than the flapper and will withstand high flow velocities that would destroy a rotator. All indication devices have a minimum flow velocity for first indication. The rotator-style indicator creates relatively high pressure drops (almost an order of magnitude greater than other indicators) due to internal flow redirection required for operation (Figure 2.22d).

Figure 2.22e shows the cross section of a typical flanged sight flow indicator. The assembly consists of the body, glasses, sealing and cushion gaskets, covers, and bolting. It is similar in many respects to the transparent level gauge discussed in Chapter 3. Soda-lime glass (like window panes) should be considered only for nonsevere applications. Standard industrial glass is borosilicate, rated to 500°F (260°C) for flow glass applications. It has good resistance to mechanical and thermal shock. For higher temperatures, special glass must be specified such as aluminosilicate, up to 800°F (425°C); fused silica or quartz allows ratings in excess of 1000°F (535°C). Tempered glass is not recommended for fluorine, hydrofluoric acid, or phosphoric anhydride service, because corrosion causes uneven stresses and eventual failure. Annealed glass is a better choice, because it signals the approach of failure by turning cloudy. To reduce point compression stress on the glass, a design is available that forms glass inside a metallic compression ring. Bolting stresses are applied to the metallic ring, not to the glass. For steam service, mica shields help protect the glass from corrosion; for fluoride/phosphoric or caustic service, consider PCTFE shields. Polymer-coated glass is also available. Polycarbonate (PC) can be used instead of glass. Acrylic (PMMA) may be used if high impact strength and abuse resistance is required, but acrylic scratches easily.

Polymer bodies are available for low pressure, near ambient temperature applications. SFI bodies may be obtained in almost any castable alloy. Metallic bodies can be lined with a variety of polymers enabling a properly specified SFI to be used in almost any corrosive service. Use caution when specifying a lining if the SFI is used in vacuum service; not all lining materials are adherent. The non-wetted bolting and covers are normally steel but may be obtained in different materials depending on anti-corrosion and temperature requirements.

© 2003 by Béla Lipták

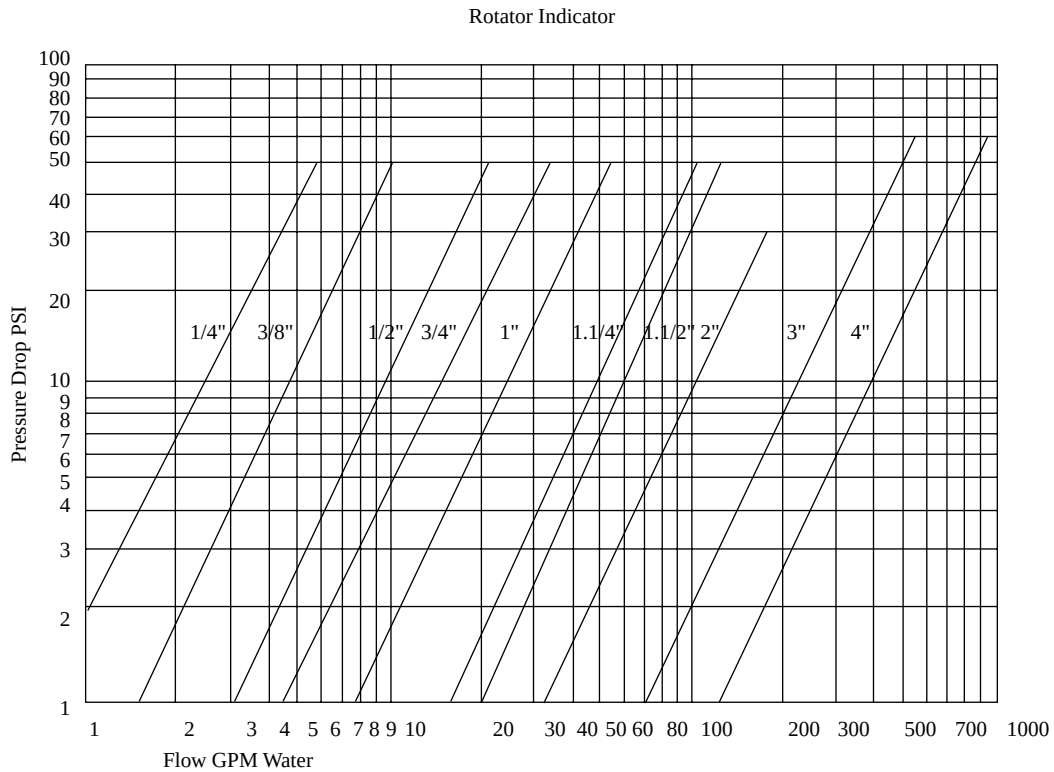

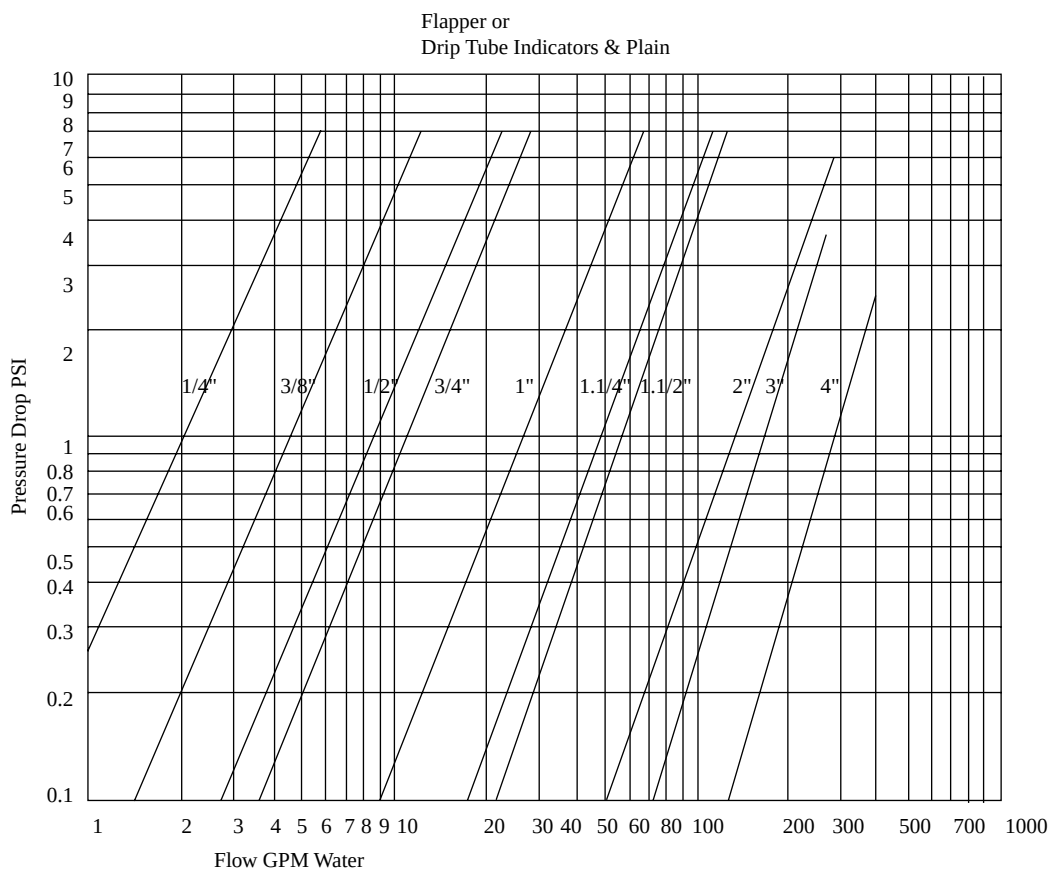

FIG. 2.22d

Sight flow indicator pressure drops on water application. (Courtesy of Dover Corp., OPW Div.)

© 2003 by Béla Lipták

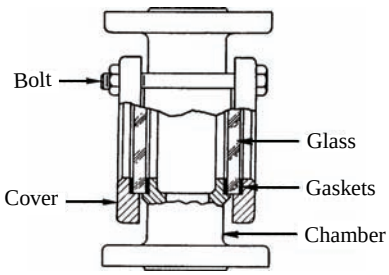

FIG. 2.22e
Cross-section of sight flow indicator.

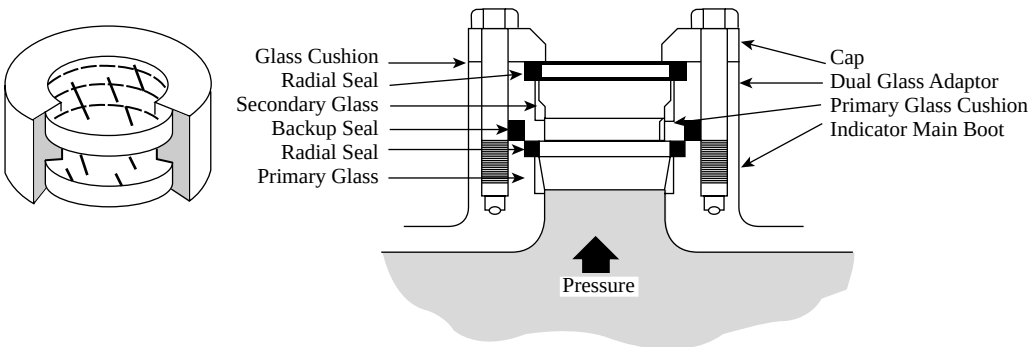

FIG. 2.22f
Cross-section of a dual window assembly. (Courtesy of Dover Corp., OPW Div.)

DUAL-WINDOW AND FULL-VIEW DESIGNS

Figure 2.22f shows the cross section of a dual-window assembly. This assembly improves the safety of an SFI in two ways. In high-temperature service, the thermal gradient across each glass is reduced, and the outer glass protects the inner glass from thermal shock caused by splashes of cold water, e.g., slant rain or snow. If the outer or inner glass breaks, there is a chance that the remaining glass may contain the process until the assembly can be repaired. Dual-window SFIs may be ordered with third-party safety approvals. To further enhance safety due to abuse or vandalism, or if the process fluid is hazardous or toxic, protective sheaths are recommended on either standard or dual-window SFIs.

In smaller pipe sizes, pressure ratings are available up to 3000 PSIG (20.6 MPa). Gasketing may be any available type except those that would cause pressure risers on the glass (e.g., graphite with tanged stainless-steel inserts). Final SFI pressure and temperature ratings may depend on the gasketing material selection. Special designs are available that can be used in sanitary services such as food/pharmaceutical processing. Available accessories include safety jackets, illuminators, insulation blankets, and spray nozzles/rings and wiper blades for cleaning the glass in place.

Most SFI bodies are designed for the inclusion of instrumentation taps, e.g., thermowells. Several types of process analyzers require plain flow glass so the operator can see the probe or other sensing element in the process. Instrumentation using visible, IR, or UV light has been adapted to SFIs using attenuation or backscatter to noninvasively monitor chemical processes. Elbow-style SFIs, both 45 and 90° (Figure 2.22g), have tapping bands available to allow use as elbow differential-pressure flowmeters.

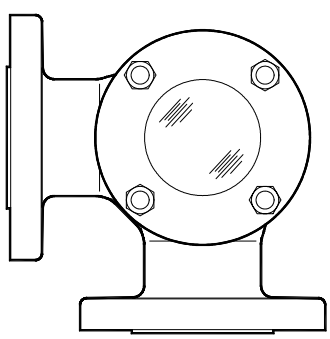

FIG. 2.22g
90° elbow sight flow indicator.

Standard SFI bodies are made with a cross-sectional area expansion from piping bore to accommodate full-bore-size vision. If minimum flow profile distortion is desired, full view SFIs (Figure 2.22h) are designed to maintain piping bore diameter. These are essentially constructed of a spoolpiece with tubular glass either radially or end compression sealed forming the body. They are available plain (360° viewing) or in an armored version for breakage protection, but the armoring reduces visibility. These are normally used for vertically upward flow and are available flanged or threaded.

© 2003 by Béla Lipták

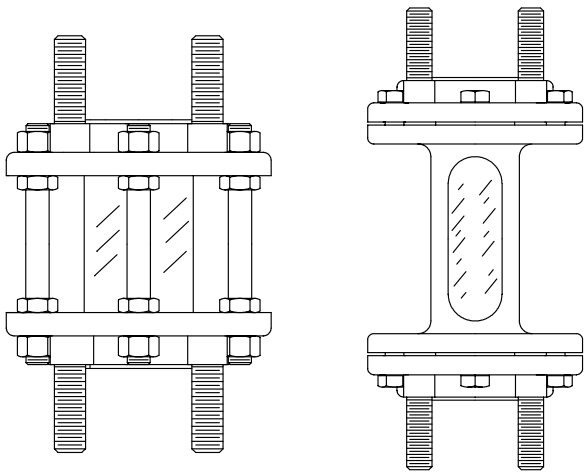

FIG. 2.22h
Flanged full view and armored full view SFI.

A variation of the standard SFI called a sight window (Figure 2.22i) is one window face of an SFI with either flanged or threaded connections designed to fit a piping tee or coupling.

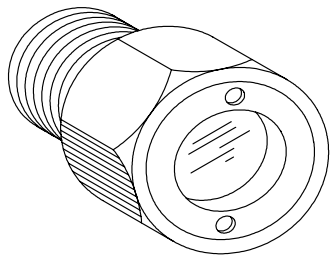

FIG. 2.22i
Threaded sight window.

CONCLUSION

Sight flow indicators offer an inexpensive means of viewing process material inside a pipe to detect flow or to note process characteristics such as color, turbidity, or other properties that might indicate process deterioration or equipment malfunction. SFIs are also used in secondary services such as condensate pot installations.

Nonetheless, SFI use is limited to primary industrial process areas, because it is difficult to estimate flow rate through a flow glass, and a hazard is created if the glass breaks. They are more commonly used in utility services associated with industrial processing.

Bibliography

Green, C. R., Tank sight glasses, *Chem. Eng.*, September 1978.
Sunderhous, C. A., Sight indicators allow positive flow check, *Machine Design*, October 1985.

© 2003 by Béla Lipták

2.23 Solids Flowmeters and Feeders

R. SIEV (1969) **D. C. MAIR** (1982) **B. G. LIPTÁK** (1995, 2003)

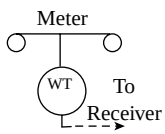

Belt Type

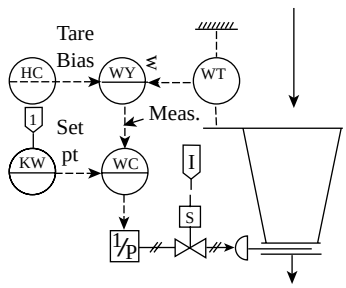

Loss in Weight

Flow Sheet Symbols

Types of Designs

A. Accelerator
B. Belt-type gravimetric
C. Volumetric, capacitance
D. Impulse or impact
E. Loss-in-weight
F. Switch (Section 2.7)
G. Dual-chamber
H. Cross-correlation (Section 2.5)
I. Nuclear
J. Microwave

Capacities

A. 1000 to 80,000 lbm/h (450 to 36,000 kgm/h)
B. Up to 180,000 lbm/h (80,000 kgm/h) or up to 3600 ft^3/h (100 m^3/h)
C. Up to 3600 ft^3/h (100 m^3/h)
D. 3000 to 3,000,000 lbm/h (1400 to 1,400,000 kgm/h)
E. Determined by hopper or duct size
F. Unlimited on–off
G. 1000 to 300,000 lbm/h (450 to 140,000 kgm/h)
H. Unlimited
I. Same as B
J. Unlimited on pulverized coal applications

Costs

$1000 to $2000 (F)
Around $4000 (C)
$4000 to $6000 (A, D)
$5000 to $20,000 (B, H)
$15,000 to $30,000 (E, G, I)

Inaccuracy

±0.5% of rate over 10:1 range (B [digital], G)
±0.5% to ±1% of full scale (I)
±1% of rate over 10:1 range (E)
±1 to ±2% of full scale (D)
±2 to ±3% of full scale (A, F)
±2 to 4% of full scale (C)

Partial List of Suppliers

ABB (www.abb.com) (C).

© 2003 by Béla Lipták

Air Monitor Corp. (www.airmonitor.com) (J)
Babbitt International Inc. (www.babbittlevel.com) (D)
Cardinal Scale Mfg. (www.ardinalscale.com) (B)
Cutler-Hammer, Thayer Scale Div. (www.cutlerhammer.eatoncom) (B, D, E)
DeZurik/Copes–Vulcan, a Unit of SPX Corp. (www.dezurikcopesvulcan.com) (A)
Endress+Hauser Inc. (www.us.endress.com) (B, C, D, F, H)
Fairbanks Scales (www.fairbanks.com) (B)
ICS Advent (www.icsadvent.com) (E)
Kay-Ray/Sensall (www.thermo.com) (I)
Kistler-Morse Corp. (www.kistlermorse.com) (B)
M-System (www.m-system.com) (B)
Milltronics Inc. (www.milltronics.com) (B, D)
Monitor Technologies LLC (www.monitortech.com) (F)
Ohmart/VEGA (www.ohmartvega.com) (I)
Technicon Industrial Systems (www.technicon.com) (G)

Many types of solids flowmeters are currently available. The majority depend on some method of weighing, but others utilize a variety of other phenomena ranging from various forms of radiation to impact force determination, and from dependence on electrical properties to centrifugal force. The conditions and properties of the flowing solids have a major impact on the type of flowmeter required. For example, the flow rate of coal can be measured by microwave detectors or belt feeders. This choice is a function of the coal being pulverized and whether it is pneumatically conveyed.

Before undertaking a discussion of solids flowmeters, we will discuss associated process equipment such as solids storage devices and the feeders that bring the solids from the storage vessel. Because keeping solids in motion and preventing arching and rat-holing in the supply bins are serious problems, the description of feeders will be preceded by the topic of feeder accessories.

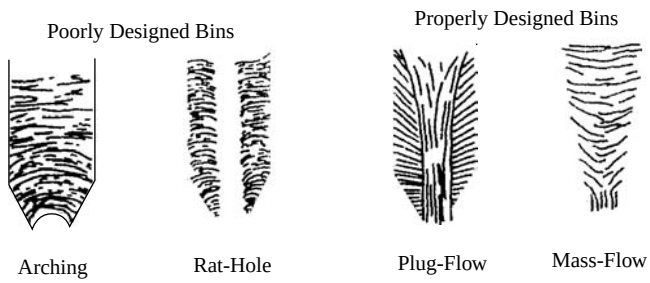

FIG. 2.23a
Good bin design is a critical requirement for a successful solids metering installation.

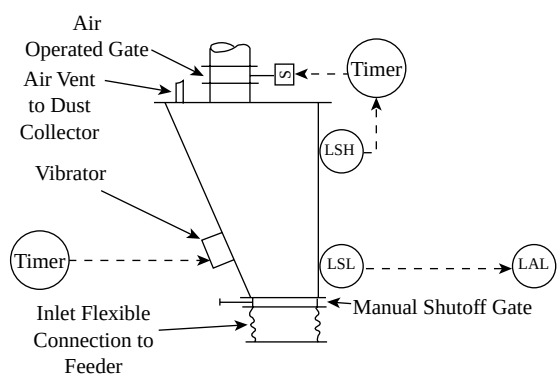

FIG. 2.23b
Deaerating surge hopper.

SOLIDS HANDLING EQUIPMENT

The bin, the feeder, and the solids flowmeter should be designed in an integrated manner, taking into account the characteristics (density, particle size, moisture content, temperature, or hazardous properties) of the solids. For example, the bed depth on a belt must be less than the height of the skirts (to avoid spillage), but it must be at least three times the maximum lump size to guarantee stable solids flow. Coarse materials (+60 mesh) or wet ores are likely to bridge or rat-hole in the bin (Figure 2.23a) and require vibrators and special feeders.

Similarly, aerated, dry, and fine solids (–200 mesh) are likely to either free-flow or be compacted and thereby plug the standard rotary vane or screw feeders. Changing the pitch or inserting additional flights can alleviate flushing. Vibrators usually also help, although in some cases they might worsen the situation by packing the solids. In general, the addition of high-amplitude and low-frequency vibrators or air pads and the use of mass flow bins (steep walls at 10 to 30° from the vertical) tend to improve material flow.

Hoppers and Accessories

A surge hopper, when located between the storage hopper and feeder inlet, provides a means of deaerating the solids. This guarantees that the solids can be fed, using a gate-controlled belt feeder, without causing flooding. The solid feed into the surge hopper is controlled by bin level switches (LSL and LSH in Figure 2.23b), which maintain the solids level within an acceptable zone by on–off control of the hopper supply gate valve. The hopper inlet device may be a rotary vane feeder, screw conveyor, or a knife gate with suitable actuator.

© 2003 by Béla Lipták

If the required feed rate is constant or nearly so, the bin switches are located so as to provide a hopper capacity that is equivalent to about 2 min retention time when operating at the design feed rate. In cases in which the material may compact in the hopper and interrupt the supply to the feeders, excess retention time is undesirable. If the feed rate is varied, an adjustable timer is incorporated in the level control circuit to adjust the time setting for keeping the hopper feed valve closed. This timer is started by the upper bin level switch (LSH), which simultaneously closes the bin supply valve when the material contacts the probe. This condition is maintained until the timer runs out and reopens the supply valve, which than stays open until the high-level detector is once again reached.

In this arrangement, the low-level switch (LSL in Figure 2.23b) serves only as a low-level alarm, which is used to shut down the feeder. Such shutdown is usually desirable to prevent loss of the plug of material ahead of the belt feeder. If the solids easily aerate, the loss of a plug of deaerated material can cause production delays, because a new supply of deaerated material has to be obtained first. Some materials will deaerate in the surge hopper without the need for vibration. Other materials require that the hoppers be furnished with electric or pneumatic vibrators. The required frequency and duration of vibration varies with solids characteristics and the vibrators therefore are provided with the means for adjusting these variables.

All manufacturers recommend that a feeder or meter be isolated from sources of vibration, and some include shock mounts with each machine. Inlet and discharge flexible connections to isolate the equipment from vibration and pipe strain in the material inlet and outlet ducting are also recommended.

Material Characteristics A number of common materials, of which sulfur is an example, will compact unless kept in almost continuous motion. Others will compact even while in motion if placed under the pressure of a relatively low head of material. In these applications, it is necessary to use small surge hoppers and use level switches that keep the head of material on the feeder belt low. The retention time of these small hoppers is on the order of a few seconds, and external vibration is not used.

The discharge flow pattern of a belt feeder varies with belt speed and material characteristics. A granular free-flowing material such as sugar will flow smoothly off the belt even at low belt speeds. Other materials having a high angle of repose coupled with a tendency to compact will drop off the end of the belt in lumps, especially at low belt speeds. This results in erratic feed rates and in short-term blend errors when part of multifeeder systems. The discharge flow pattern can be markedly improved by equipping the feeder with a material distributor. This device consists of a blade located across the full width of the belt at the discharge end of the feeder and vibrated by an electric or pneumatic vibrator. The blade is located so that it almost touches the belt and the material is directed across it. This vibration causes the solids to be spread out into a ribbon and to smoothly stream off the belt.

Unlike liquids, which exhibit predictable flow behavior, solids flow characteristics are extremely difficult to evaluate on any basis other than an actual trial. For this reason, most manufacturers maintain a test and demonstration facility in which samples of a potential customer's solids samples can be fed by various test feeders equipped with various volumetric feed sections. Recognizing that a wealth of experience with commonly used materials can very often permit a feed section recommendation without the need for testing, it also should be noted that even a minor change in the properties of a material can drastically change its feeding characteristics. These changes might be in particle size or particle shape but can also be caused by the entrainment of air, which occurred during pneumatic conveying prior to the solids entry into the feeder, or by the addition of an additive to the preblended solids.

Many installations involve feeding directly into processes that may be under low pressure or that may discharge corrosive vapors back through the feeder discharge ducting. If pressures are very low, the feeder can be purged with inert gas, or a rotary valve can be installed in the ducting. The rotary valve body should be vented to remove process vapors from the valve pockets before they reach the inlet or feeder discharge side of the valve. If the valve is not vented, blowback resulting from the release of pressure in the rotor pockets can cause discharge flow pattern disturbances and, in extreme cases, affect the feeder weigh section. The valve is vented into a dust or vapor collecting system via a vent port in the side of the valve rotor housing.

Taking Samples Feeder manufacturers base their performance guarantees on taking a timed sample, weighing it, and comparing the result with the setpoint of the feeder. This requires some means of sampling, which are available either as sample trays, which are inserted into the feeder discharge stream for a predetermined period and then weighed, or as flap valves, which temporarily divert the discharge stream from the process duct into a sampling container. The flap-type valve is generally preferred, because the tray-type sampler is suitable only for low feed rates. Sampling normally involves the taking of 10 consecutive 1-min samples and comparing the average sample weight to the setpoint. Another advantage of the flap-type sampler is that it is faster acting, and the sample weights obtained are thus more accurate.

Each feeder or meter is usually supplied with a test weight or drag chain, which may be used to check the calibration of the device without actually running material. The weight is usually selected to match the full scale of the weight-sensing mechanism. Such test weight is also useful in aligning the control setpoints in multifeeder master–slave systems prior to running any material. In such systems, the test weight can be applied to the master feeder, and the resultant output signal can be sent to the ratio station setpoints of the slave feeders.

© 2003 by Béla Lipták

Feeder Designs

A gravimetric feeder consists of a weight-rate measuring mechanism coupled with a volumetric feed rate control device. The vertical gate volumetric regulator, which is perhaps the most popular, is not suitable if the solids have large particle size, are fibrous, are irregularly shaped, or tend to flow like a fluid because of fine particle size. Because of this wide variation of solids properties, a variety of feeders have been designed as described in the following paragraphs.

Vertical-Gate The vertical-gate gravimetric feeder is available in a variety of sizes to produce typical material ribbon widths of 2 to 18 in. (50 to 457 mm) and to regulate up to 6 in. (152 mm) of material depth on the weigh belt. Gate actuators may be electromechanical or pneumatic, or they may use computer-controlled electric servomotors or stepping motors. Manually adjustable gates are also available. The vertical gate has a typical depth control range of 10:1 and is generally suitable for materials that are not fluidized and that have a particle size not larger than about 0.125 in. (3.175 mm). Larger particles will not flow smoothly under the lip of the gate, thus resulting in an irregular belt load. This may require excessive damping of the belt load transmitter output, which will have an undesirable effect on both control accuracy and sensitivity. In addition to producing undesirable control characteristics, rangeability will be decreased as particle size increases. As a rule of thumb, the minimum gate opening should be approximately three times the maximum particle size for solids having irregularly shaped particles of random size. This 3:1 ratio may be reduced somewhat if the material is homogeneous and particles do not tend to interlock and tumble while in motion (typically, if particle shape approaches that of a sphere).

Rotary-Vane Figure 2.23c shows a rotary-vane feeder, which can be provided with a variable-speed drive and conventional or computer controls. Such a feeder is used as the volumetric feed section in instances in which the material is aerated or has a low bulk density. Rotary feeders are not recommended for handling solids with large particle sizes or if the solids are sensitive to abrasion by the feeding device. In solids-blending applications, it is possible to operate several feeders in parallel or in cascade from the same setpoint.

Similarly to the vertical gate feeder, the rotary-vane feeder is not suitable either for handling fibrous or stringy materials, because sticky or hygroscopic materials tend to clog the pockets of the rotor. The sizing of pocket shape and depth is based on the required volumetric flow rates and material characteristics. Volumetric capacity is regulated by rotor speed, but if the speed is too high, rotor pockets won't completely fill as they pass under the inlet opening, and volumetric output may decrease if rotor speed exceeds the optimum. Therefore, care must be taken in determining a maximum practical rotor speed.

The rotary-vane feeders therefore have limitations when used on applications involving free-flowing powders or materials having small particle size but, unlike the vertical gate, they can handle low-density or aerated materials. The rotary feeder should be separately mounted from the gravimetric meter and should be interconnected by means of a flexible connection to prevent transmittal of vibration from the rotary feeder to the weight-sensing meachanism. Figure 2.23c also shows a manually positioned leveling gate, which is located ahead of the weighing section. This device levels the irregular feed pattern created by a rotary feeder and produces a more consistent feed to both the weighing section and eventually to the process. The shutoff gate at the feeder inlet serves the isolation of the feeder from the material supply during inspections or servicing.

Screw Feeders The feeder element in this device is a screw whose rotary motion delivers a fixed volume of material per revolution (Figure 2.23d). The screw is located at the bottom of a hopper so that its inlet is always flooded with solids. Screws grooved in one direction discharge material at one end only. Screws grooved in opposite directions from the middle deliver material at both ends. Rotation of the screw

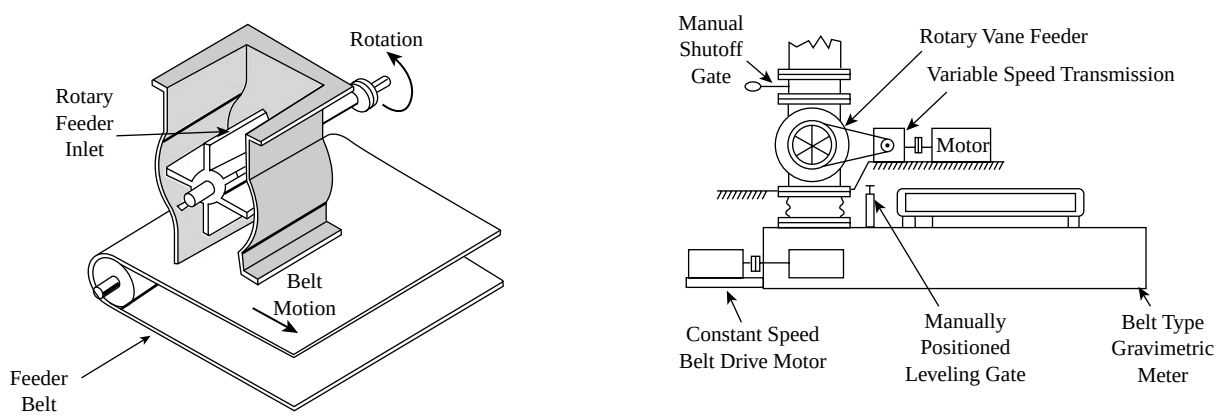

FIG. 2.23c
Gravimetric feeding system utilizing a rotary vane volumetric feeder controlled by a belt-type gravimetric meter.

© 2003 by Béla Lipták

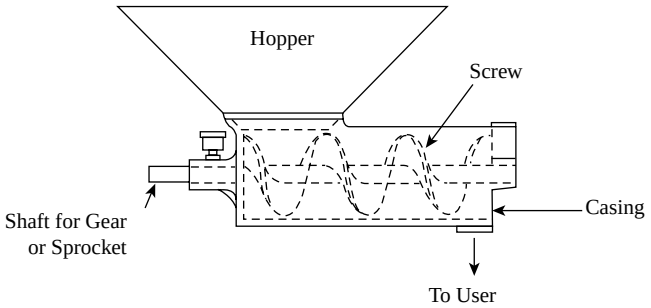

FIG. 2.23d
Screw feeder.

can discharge material into receiving vessel(s), at one or both ends of the screw.

A variable-speed screw feeder can feed control low-density or aerated materials. The screw section can be made as long as is necessary to prevent the material from flooding through it. Screw feeders have also been successfully used on fibrous solids and on powdered materials, which tend to cake. The major advantage of the screw feeder, compared to a rotary vane feeder, is that custom-built screw feeders can be provided with extremely large inlet openings to facilitate the entry of fibers and coarse lumps into the conveying screw.

When the solids have a tendency to cake or clog the screw, the double-ended version of the screw feeder can be oscillated laterally. This oscillation imparts lateral forces that assist in moving the solids through the unit by alternately moving the material first toward one end and then the other.

To assure an accurate feed, the hopper on the inlet side of the feeder must be designed to provide a uniform supply of material to the feed screw. Vibrators can be added to the hopper to keep the solids agitated and to prevent caking and bridging.

Feeder drives are usually electric motors. If the drive is a constant-speed unit, the feed rate is adjustable over a 20:1 range by means of a mechanical clutch that varies the on–off operating time per cycle. In this case, if the feed rate is set at 75%, the screw feeder will be operating 75% of the time or 75% of a clutch revolution. The addition of an analog or digitally controlled variable-speed drive can extend the rangeability of the unit to 200:1.

Vibratory Feeders Vibratory feeders are used in gravimetric feeding systems to handle solids with particles that are too large to be handled by screw, rotary-vane, or vertical-gate feeders, or in operations where the physical characteristics of the solid particles would be adversely affected by passage through these volumetric feeding devices. The discharge flow pattern of a vibrating feeder is extremely smooth and thus is ideal for continuous weighing in solids flow metering applications.

The vibratory feeder (Figure 2.23e) consists of a feed chute (which may be an open pan or closed tube) that is moved back and forth by the oscillating armature of an electromagnetic driver. The flow rate of the solids can be controlled by adjusting the current input into the electromagnetic driver of the feeder.

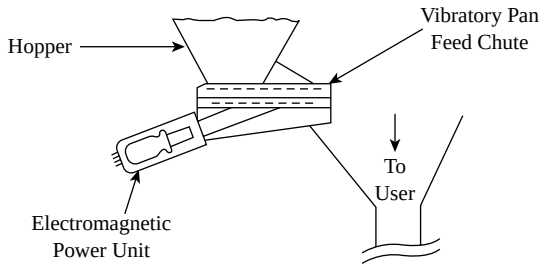

FIG. 2.23e
Vibratory feeder.

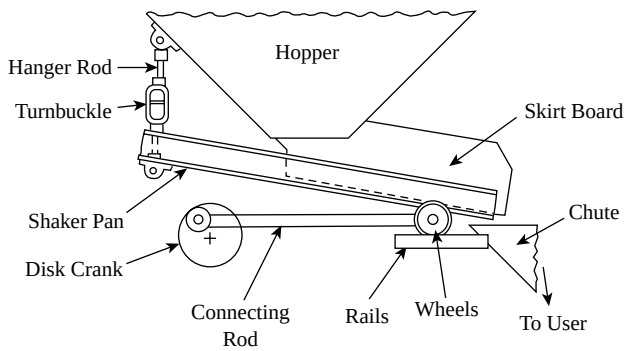

FIG. 2.23f
Shaker feeder.

This input controls the pull of the electromagnet and the length of its stroke. Vibratory feeders are well suited for remote computer control in integrated material-handling systems.

The vibratory feed chute can be jacketed for heating or cooling, and the tubular chutes can be made dust tight by flexible connections at both ends. The vibratory feeders can resist flooding (liquid-like flow) and are available for capacity ranges from ounces to tons per hour.

Shaker Feeders The shaker feeder (Figure 2.23f) consists of a shaker pan beneath a hopper. The back end of the shaker pan is supported by hanger rods. The front end is carried on wheels and is moved by a crank. As the pan oscillates, the material is moved forward and dropped into the feed chute.

In most units, the number shaking strokes is kept constant while the length of the stroke is varied. The angle of inclination of the shaker varies from about 8° for freely flowing solids to about 20° for sticky materials. If arching is expected in the hopper, special agitator plates are installed in the hopper to break up the arches. The shaker feeder is rugged and self-cleaning, and it can handle most types of solids regardless of particle size or condition.

Roll Feeder Roll feeders are low-capacity devices used for handling dry granules and powders (Figure 2.23g). The feeder consists of a feed hopper, two feed rolls, and a drive unit. Guide vanes in the hopper distribute the material and provide agitation by oscillation. The feed rolls form the material into

© 2003 by Béla Lipták

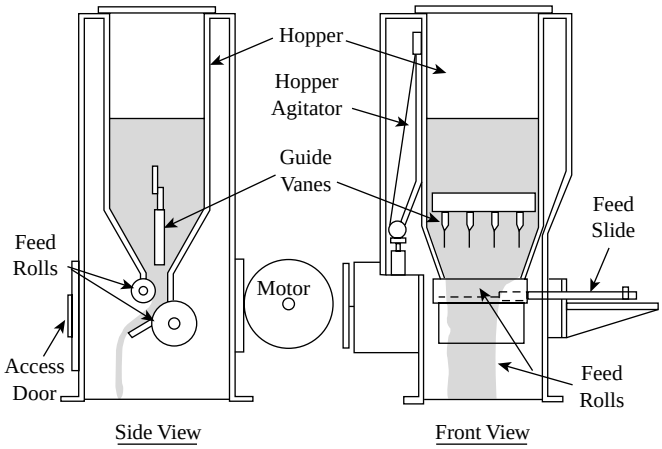

FIG. 2.23g
Roll feeder.

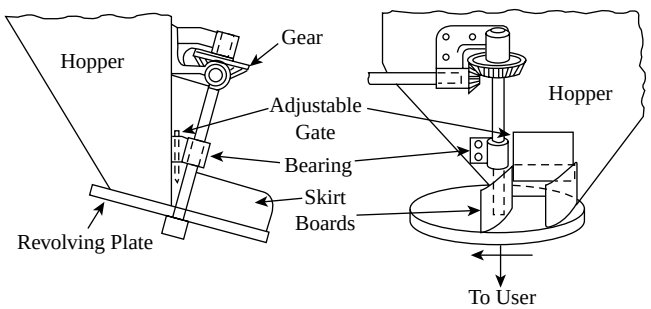

FIG. 2.23h
Revolving plate feeder.

a uniform ribbon, and the feed rate is controlled either by means of a slide that varies the width of the ribbon or by means of a variable-speed drive. The rangeability is typically 6:1 when using the feed slide and 10:1 when variable-speed drives are used. For materials that tend to cake or bridge in the hopper, agitators can be provided to maintain the material in a free-flowing state.

Revolving-Plate Feeders Revolving-plate feeders (Figure 2.23h) consist of a rotating disk or table (usually horizontal), which is located beneath the hopper outlet. The table is rotated and, as it rotates, fresh material is drawn from the hopper while the solids that the feeder discharges are scraped off by skirt boards. The feed rate is controlled by adjusting the height of the gate or positioning the skirt board.

Revolving-plate feeders handle both coarse and fine materials. Sticky materials are also handled satisfactorily, because the skirt boards are able to push them into the chute. This type of unit cannot handle materials that tend to flood. A variation of the revolving plate feeder utilizes rotating fingers to draw feed material from the bin. Revolving-plate feeders can also be equipped with arch-breaker agitators in the conical throat section of the hopper.

GRAVIMETRIC FEEDERS

Belt feeders are compact factory-assembled devices that use belts to transport the material across a weight-sensing mechanism. In the case of solids flowmeters, the flow of solids is uncontrolled, and the load on the constant speed belt is measured as an indication of the solids flow rate. The flow rate of solids on a simple gravimetric feeder can be regulated by a vertical or rotary gate, screw, or other volumetric control device. More accurate control methods are based on varying the belt speed or adjusting both the belt speed and the belt loading. (Although this volume of the *Instrument Engineers' Handbook* is devoted only to measurement, in connection with gravimetric belt feeders, it is also necessary to touch upon the topics of regulation and control, which will be discussed in much more detail in the second volume.)

Early Belt Feeder Designs

Figure 2.23i illustrates the forerunner of most modern belt feeders. It consists of a constant-speed belt coupled to a gate that modulates the solids flow rate so that the belt load is balanced by an adjustable poise weight. This feeder is unique in its simplicity but is inferior to the more modern designs for the following reasons:

1. The entire feeder is weighed rather than only a portion of the belt. Consequently, the ratio of live load to tare weight is low. In addition, the mechanical friction in the pivots results in a low sensitivity in the belt load-detection system.
2. This is a proportional-only controller, because the opening of the gate control element is proportional to the belt load error. Much as a float-operated level-control valve cannot maintain the level at setpoint if valve supply pressure or tank draw-off vary, this feeder cannot maintain the solids flow rate if the bulk density of the solids changes.

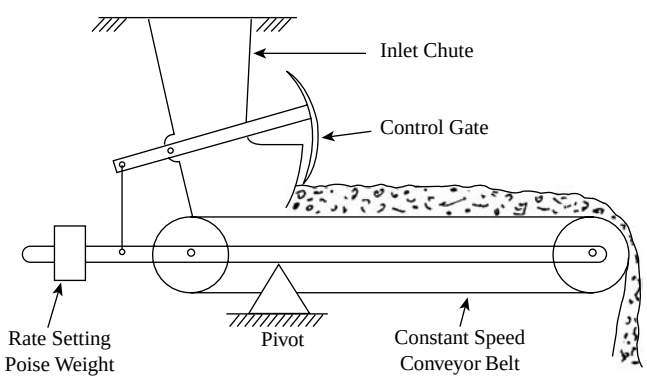

FIG. 2.23i
Early belt-type mechanical gravimetric feeder.

© 2003 by Béla Lipták

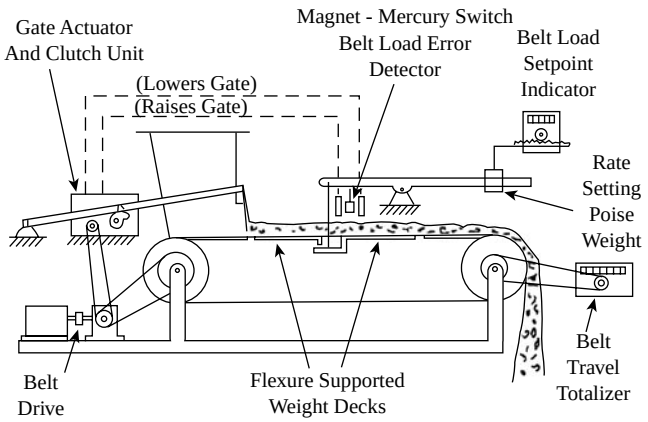

FIG. 2.23j
Belt-type electromechanical gravimetric feeder.

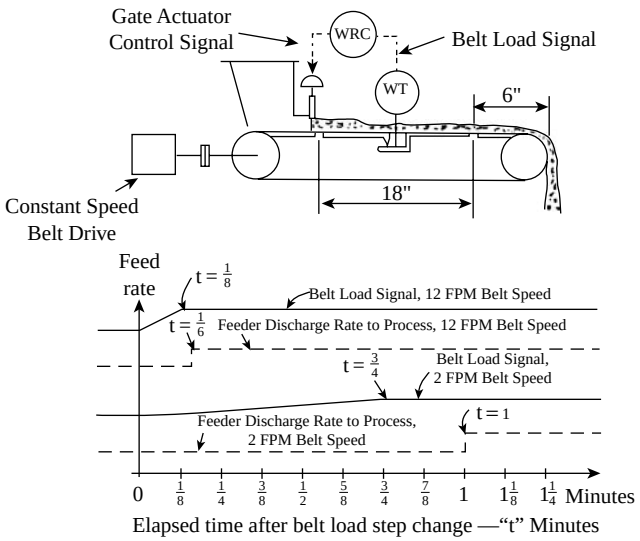

FIG. 2.23k
Open loop response to a step change in belt loading.

Figure 2.23j illustrates another early electromechanical gravimetric feeder design. Here, the belt load is balanced by a poise weight on a mechanical beam, which also carries a magnet. If the beam is not balanced, the magnet energizes one or the other of two clutches via a pair of mercury switches, which are energized by the magnet. These clutches actuate and establish the direction of travel of the gate-positioning mechanism. The gate modulates the belt loading to keep it constant and matched with the belt load set by the poise weight on the balance beam.

This feeder will maintain the belt loading regardless of changes in material density and subject only to the volumetric control limits of the gate. In this design, the belt load setpoint can be indicated by a mechanical counter that is geared to the beam poise weight drive. A second counter can be geared to the belt drive, which can give the total length of belt travel. The total weight of solids fed can thus be calculated by multiplying the readings of the two counters.

In more up-to-date versions of this design, remote setpoint and the measurement signals are provided, along with automatic shutdown, after the desired total weight of material has been fed. Gate position-actuated adjustable limit switches can be provided to activate alarms that can indicate either the stoppage of the supply of solids to the feeder or the overtravel of the control gate resulting from abnormally low material density.

Feed Rate Control

The feed rate of all belt-type gravimetric feeders is a function of the belt speed and the unit loading of the belt. If belt speed is expressed in feet per minute and belt loading in pounds of solids per foot of belt, the solids flow is obtained as

$$\text{Flow rate} = (\text{Belt speed})\,(\text{Belt loading}) = 1\text{bm/min} \qquad \textbf{2.23(1)}$$

In the case of the constant-speed belt feeders previously discussed, the flow rate of solids is directly proportional to belt loading. Another method of flow rate adjustment is to vary the belt speed while maintaining the belt loading constant. The third option is to vary both the belt speed and the belt loading, in which case the flow rate is obtained as in Equation 2.23(1).

Belt Load Control of Constant-Speed Belts A standard constant-speed belt feeder, provided with a pneumatic gate actuator, is shown in Figure 2.23k. The length of the weighing section and the distance from the end of weighing section to the end of belt are approximately the same as those in an actual feeder. The response shown in Figure 2.23k is not precisely depicted, because it assumes instantaneous gate response and does not consider the controller lags, but these effects are minor in comparison to the effect of the belt transportation lag, which is the major source of concern in using constant-speed belt feeders.

The uppermost curve shows the response of the belt load signal to a step change in belt loading if the belt is moving at a speed of 12 ft/min. The dashed line below represents the instantaneous feeder discharge rate at the end of the feeder belt. This is the solids flow rate that the process downstream of the feeder receives. By reviewing the top line, one can conclude that some effect of the stem change in belt loading is sensed almost immediately after the step change, because the control gate is located at the upstream edge of the weighing section. At the 12-ft/min belt speed, the full length of the weighing section will be covered by the new level of solids in 18/144 = 1/8 min after the step change. Yet, at that time, the feeder is still discharging at the rate, that existed prior to the step change, and an additional 1/24 min is required to transport the material to the end of the belt—a distance of 6 in.

If the belt speed is 2 ft/min, the corresponding feeder response will be as described by the lower pair of curves in

© 2003 by Béla Lipták

Figure 2.23k. In this case, it will take a full minute before the downstream process starts receiving the new solids flow rate after a step change in belt loading is made. Such response times might be tolerable by some single-feeder processes, but not all.

Belt Speeds and Blending In continuous blending operations, the instantaneous blend ratio must be continuously maintained, so acceptability of constant-speed feeders is more limited. We can conclude from the data in Figure 2.23k that, if two feeders having belt speeds of 12 ft/min and 2 ft/min were controlled from a common belt loading signal, and a step change occurred in that signal, the result would be a temporary upset in the actual blend ratio. This upset would start 10 sec after the change in the belt loading setpoint and would persist for a period of 50 sec, at which time the original blend ratio would be restored.

Therefore, blend ratios that are obtained from two or more constant-speed gate feeders cannot be maintained unless the belt speeds of all feeders are identical. This is a serious limitation, because, in blending application, it is rarely possible to size a number of feeders that are delivering different solids flow rates so that they all have the same belt speed. If the solids flow characteristics permit it, one can increase the belt speed by decreasing the width of the material ribbon on the belt, but this does not satisfactorily solve the problem in most applications.

The blend ratio upsets can be reduced if the feeders are cascaded in a master–slave relationship wherein the step change in the belt load is first applied to the master feeder's gate actuator, and its belt load signal is used to control the gate actuator of the slave feeder. One should always select the slow speed feeder as the master, because slaving the low-speed feeder to the high-speed one will only increase the duration of the upset in blend ratio. Computer studies indicate that the upsets in blend ratio will be minimized if the belt speed of the slave feeder is 1.5 times that of the master.

Belt Speed Selection Guidelines

1. In single-feeder applications, optimal response is obtained by selecting the maximum possible belt speed commensurate with the characteristics of the material being fed and with the belt load limits established by the feeder manufacturer.
2. In continuous blending applications involving two or more feeders of identical speed, the upsets in blend ratio caused by step changes in loading will be minimized if the feeders are controlled in parallel from a common loading-rate signal.
3. In continuous blending applications, where the constant-speed belt feeders have different speeds, the upset in blend ratio can be minimized by arranging the individual feeders in a cascaded (master–slave) configuration and selecting the lowest-speed feeder as the master. The upsets in blend ratio will be minimized if the speed of the slave is 1.5 times that of the master.

Varying the Belt Speed The main advantage of belt speed control over belt load control is that the solids flow to the process changes almost simultaneously with a change in belt speed setpoint. The use of speed control in multifeeder blending applications eliminates the blend ratio error that was caused by the differential transport lag, typical of constant-speed feeders. In variable speed blending systems, a common speed signal is applied in parallel to manipulate the speeds of all feeders, increasing or decreasing the total throughput of the blended solids.

The ratio of any ingredient in the total blended product can be modified by changing either the belt load or the belt speed of the corresponding feeder. The latter method is preferred if the ratio has to be changed while the system is operating, because the changing of belt loading during operation will cause a temporary blend error due to the transport lag between the control gate and the process. If a continuous integrator is used, it will accurately register the total solids flow, no matter if the blend ratio was manipulated by changes in belt loading or in belt speed.

Limitations of Belt Speed Control While the manipulation of the belt speed guarantees fast response to setpoint changes and eliminates the transport response error in blending, it also has some disadvantages.

1. One disadvantage relative to constant-speed feeders is that the variable-speed design does not provide feed rate readout. Therefore, the feed rate must be calculated by multiplying the belt speed times the belt loading.
2. In multifeeder blending systems every change in the blend ratio requires a change in the belt loading or in the speed ratio setpoint to one or more of the feeders. This, in turn, will change the total throughput to the process unless a master speed adjustment is made to compensate.

To overcome the above limitations, it is necessary to measure both the belt speed and the belt loading and, based on these two measurements, calculate the total solids flow rate, which then can be compared to a single setpoint representing the required feed rate. Figure 2.23l illustrates such a control configuration.

In the older, pneumatic version of this control system, the belt speed rangeability was 10:1. In the electronic version, where silicon-controlled rectifier (SCR) drives are utilized, the rangeability of speed variation is at least 20:1. In Figure 2.23l, the feeder is equipped with a fixed gate. This is acceptable in all applications where the material density is constant enough that the adjustment rangeability of the belt speed drive can accommodate all variations in both density and gravimetric feed rate. If the density variation is substantial, or if the feeder is to be used on a variety of materials having different bulk densities, the rangeability of belt speed adjustment might be insufficient. In such cases, a secondary or slave control loop is added to manipulate belt loading.

© 2003 by Béla Lipták

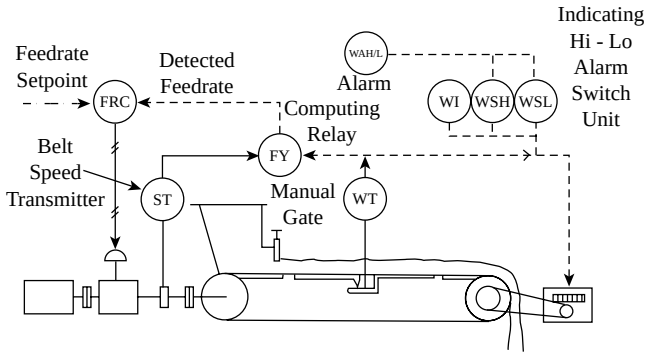

FIG. 2.23l
Speed-controlled belt feeder with both set-point and measurement in feed rate units.

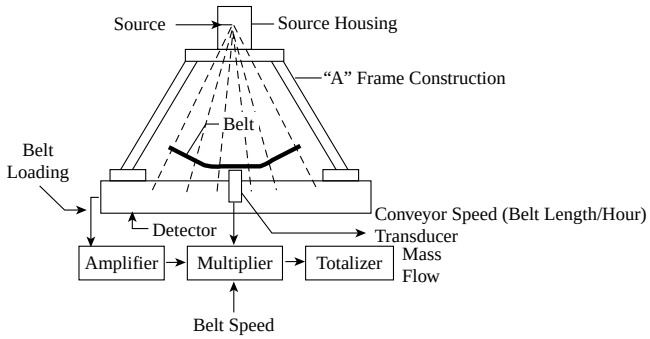

FIG. 2.23m
Nuclear belt scale supported by A-frame. (Courtesy of Kay-Ray-Sensall.)

Precision of Weighing Weighing accuracy is the highest if the belt loading is maximized. This, in turn, will maximize the live load to dead load ratio. Gravimetric belt feeders are sized to handle the maximum required solids feed rate when the belt drive is operating at near maximum speed and the belt loading is at about 90% of maximum, based on the minimum expected material density.

To allow accurate setting of the manual gate position, a belt load indicator is desirable. To remind the operator that the manual gate opening needs to be readjusted because of changes in solids density, belt loading alarms are recommended. Such high and low alarm switches (LSH, LSL), as shown in Figure 2.23l, can simultaneously actuate audible alarms and initiate computer printouts.

Nuclear Belt Loading Detectors Belt loading can also be measured by detecting the radiation absorption of a discrete length of material. In all other respects, the nuclear belt scales are similar to gravimetric belt scales except that the load cells are replaced by nuclear densitometers. These devices have been used successfully not only on belt feeders but also on screw, drag chain, and vibrating feeders. The radiation source can be cesium 137, cobalt 60, or americium 241. The radiation source is usually placed above the belt and is supported on either side by a C- or A-frame (Figure 2.23m). In this configuration, the radiation detector is located below the belt and receives a radiation intensity that is inversely proportional to the mass of solids on the conveyor.

Nuclear belt scales are suited for such hard-to-handle services as hot, abrasive, dusty, and corrosive materials. If the moisture content, bulk density, and particle size of the solids are all constant, they can measure the belt loading within an error limit of 0.5% of full scale when the belt load is high (70 to 100% of full scale). On the other hand, if dissimilar solids are intermixed and measured by the same scale, the differences in radiation absorption characteristics can result in substantial errors. For nuclear belt scales, the minimum required belt loading is about 2.5 lb/ft^2 (12 kg/m^2), and these units are not recommended for belt runs that are shorter than 10 min or for belt loadings that are below 10% of full scale.

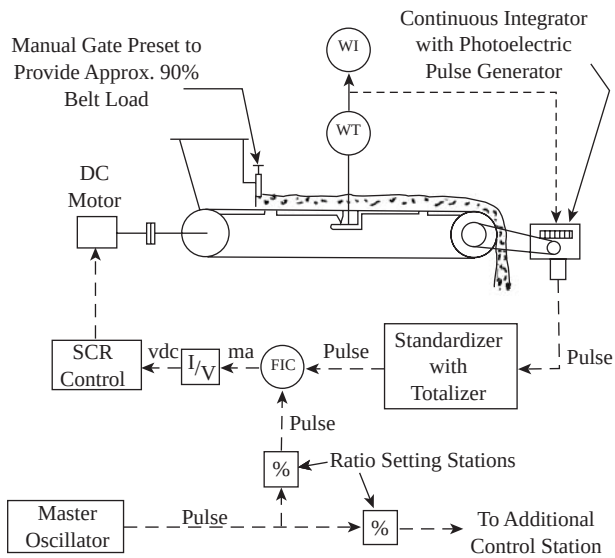

FIG. 2.23n
Belt-type gravimetric feeder with digital controls.

Digital Control The continuous integrator at the bottom right of Figure 2.23l totalizes the quantity of solids delivered by multiplying belt travel times belt loading. The instantaneous rate of integration is the rate of feeding the solids. Therefore, if the continuous integrator was provided with a feed rate transmitter, the belt speed transmitter (ST) and feed rate relay (FY) in Figure 2.23l could be eliminated, and the feed rate signal from the integrator could be sent directly to the feed rate controller (FRC). Figure 2.23n describes this arrangement, which has been developed for use in commercial digital control systems.

The digital control system is theoretically without error, because the pulses generated by the master oscillator in Figure 2.23n must be matched by those derived from the pulses generated by the integrator transmitter on the feeder. Laboratory evaluations and field tests have shown that the feeding precision based on weighed samples vs. total integrator pulses is better than 0.5% of feed rate over a 10:1 feed rate range.

© 2003 by Béla Lipták

Digitally controlled gravimetric feeders are utilized in situations involving a number of materials that must be blended in a wide variety of frequently changed formulations. High accuracy, high speed, ease of formula change, and centralized control characterize the digital control system. Although the cost of the feeder and its associated digital control is perhaps 50% higher than the cost of a feeder with conventional analog controls, digital control is widely used in continuous blending systems, particularly in the food industry.

Digital systems are superior to analog ones, because each pulse represents a specific increment of weight. Therefore, a pulse rate of 100 pulses per minute, for example, with a pulse value of 2 lb, signals a solids flow of 200 lb/min. The pulses are totalized on both the measurement and the setpoint side, so errors due to temporary starvation or overcharge, common in analog systems, cannot occur in digital ones. Another advantage of the digital system is the flexibility of the microprocessor, which can easily and quickly be reprogrammed, for example, for operating like a mass flowmeter or being part of a blending system.

The microprocessors also provide the capability for automatic recalibration and retention, for future reference, of the corrections that were applied at each test. The microprocessor-operated units are also capable of functioning in several modes, such as in start-up, predetermined fixed flow, or flow-ratio modes. They can have a variety of ratio or cascade configurations, logic interlocks, input and output signals (BCD, serial, analog), displays, printers, and memory units. They can receive their setpoints from other systems and also can receive stop/start signals as a function of other operations in the plant. They can operate as PID loops with dead time compensation utilizing such algorithms as "sample" and "hold," and, finally, they can operate as batching units with remote resets.

Batch vs. Continuous Charging Digital control systems are available in two basic arrangements: one for batching systems, the other for continuous feeding systems. In the batching version, the master oscillator in conjunction with a timer delivers a total number of pulses that are proportional to the desired total weight of solids. The pulse frequency is adjusted to vary the duration of the batch preparation period. The pulses are applied as the setpoint to the feed rate controllers (FIC in Figure 2.23n) via ratio setting stations for ingredient ratio. The feed rate measurement pulses are generated by the photoelectric pulse generator, which is driven by the feeder integrator. These pulses are sent to the feed rate controller after being scaled and standardized.

The controller compares the setpoint and measurement pulse frequencies and adjusts the feed rates as required by varying belt drive speed. In the batch controller version, a memory feature is also included so that the feeder continues running until it has generated the total number of pulses that equal the total pulses received as the setpoint by the feed rate controller from its ratio station. In a multifeeder batching system, this feature may result in feeders shutting down at different times, but the batch blend ratio will be correct.

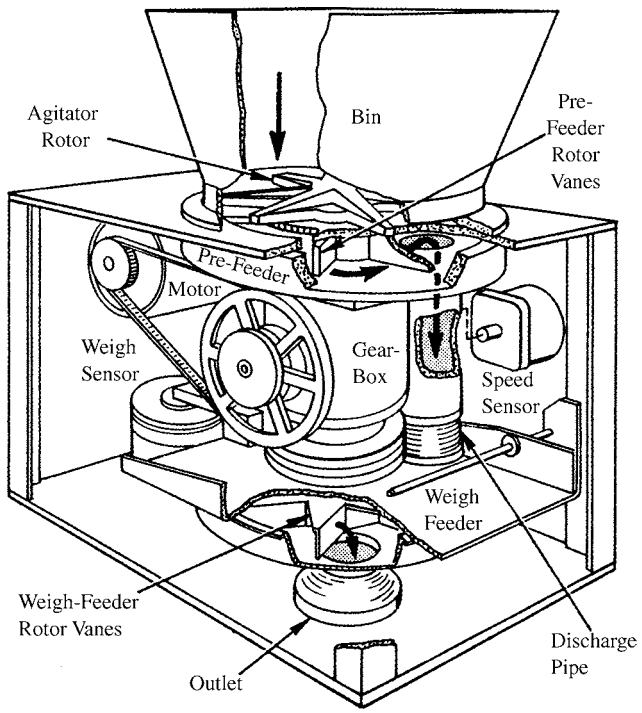

FIG. 2.23o
Vertical gravimetric feeder.

In continuous systems, another version of controller is used. It includes a pacing feature, which paces down all the feed rates if the feed rate of one feeder drops. Therefore, if the controller cannot correct a decrease in feed rate of one feeder, the corresponding controller will "gate" the output of the master oscillator and thus will pace down the feed rates of the other feeders to maintain blend ratio. When the faulty feeder corrects or is corrected, all feeders are automatically returned to normal control, and the master oscillator continues to set the feed rate. If the faulty condition persists for some predetermined period, an alarm is activated.

Vertical Gravimetric Feeders

A vertical gravimetric feeder is illustrated in Figure 2.23o. An agitator rotor within the supply bin guarantees a "live" bin bottom. The process material enters through a hole in the top cover of the pre-feeder and is swept through a 180° rotational travel by the rotor vanes until it is dropped into the discharge pipe. The solids are weighed along with the rotary weight feeder as it transports the solids to the outlet.

The advantages of this feeder include its convenient inlet–outlet configuration; its sealed, dust-tight design; and its self-contained nature wherein all associated control instruments are also furnished. After calibration, ±0.5% of full scale performance can be expected if a 5:1 rangeability is sufficient. At a 20:1 rangeability, the error, if the unit is calibrated, is ±1% of full scale.

The main disadvantages of this design are that the unit has a limited capacity and can only handle dry and free-flowing

© 2003 by Béla Lipták

powders with particle diameters under 0.1 in. (2.5 mm). Large foreign objects cannot be tolerated in the process material, nor can damp or sticky solids that might cake or refuse to flow freely.

LOSS-IN-WEIGHT FLOWMETERS

One continuous loss-in-weight feeder design is illustrated in Figure 2.23p. In this system, the weight of the solids in the hopper is counterbalanced by a poise weight, which travels on the scale beam and is retracted at a constant rate. The controller modulates the speed of the rotary feeder so as to maintain the rate of retraction of the poise weight constant. The balance of the beam is maintained by increasing the rate of solids discharge if the weight of solids in the hopper exceeds that of the poise weight or decreasing the rate if it does not. Instead of a rotary feeder, the modulated control device can be a rotary screw feeder or a vibratory feeder.

The loss-in-weight systems are suitable for handling liquids and slurries as well as solids, because the weight-sensing section of the system is a tank or silo rather than a horizontal belt surface, which is open on all sides. Manufacturers of such units claim that if the delivery time period is short, their feeder gives better precision than other continuous feeders, because in their case the weight is measured ahead of the solids discharge device. Therefore, if an error in flow rate exists, it is corrected before the material leaves the feeder and enters the process.

Continuous Operation

In this configuration, the supply hopper or tank is suspended off one or more load cells. Tension cells are preferred to minimize the errors caused by nonsymmetrical loading. The controller detects the weight sensed by the load cell(s) and subtracts it from its setpoint, which is generated by a programmer. In other words, the programmer generates a signal corresponding to a fixed reduction rate of the total weight in the hopper, and this signal becomes the setpoint. The difference between the weight of material in the hopper and the programmed setpoint weight is continually sensed, and the flow rate of the material exiting from the hopper is regulated to keep them in balance.

The hopper must be periodically refilled, and this filling cycle must be initiated before the hopper is completely empty. Consequently, a "heel" always remains in the hopper and serves to minimize the shock on the load cells at the beginning of the filling cycle. The filling operation is controlled by a differential gap controller and a material supply valve, gate, or feeder (not shown in Figure 2.23p). When the weight of material in the hopper drops to the preset "heel" weight, the differential gap controller starts the filling cycle and at the same time either "locks" the discharge flow regulating device in its last position or closes it. When hopper weight reaches a high limit (corresponding to the filled condition), the differential gap controller stops the filling cycle and restarts the feeding cycle by returning control of the discharge regulator to the loss-in-weight control system. During the filling cycle, the feeding system is operating on a volumetric rather than on a gravimetric basis; hence, filling is accomplished as rapidly as possible. It is desirable to design these system such that the refill cycle is a small portion of the total cycle time.

Equipment

Hermetically sealed load cells are used that withstand not only dust and corrosion but are also compensated for temperature and barometric pressure changes. To withstand shock loading, the load cells should also be designed to withstand overloads of 150% of rating or more. If strain-gauge-type load cells are used, their power supplies should not only be closely regulated, but they should also be compensated for supply voltage variations. For loss-in-weight applications, tension-type cells are preferred, because the compression-type strain gauge load cells are sensitive to side load forces, which can be generated either by thermal expansion of the structure or by nonsymmetrical hopper loading.

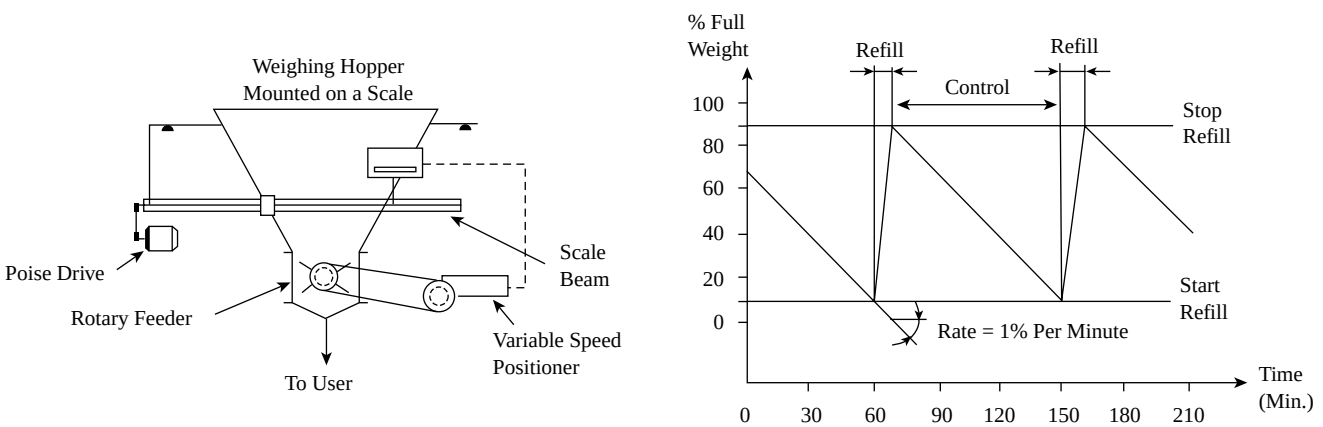

FIG. 2.23p
Continuous loss-in-weight feeder.

© 2003 by Béla Lipták

The weigh hoppers are often supplied by the user rather than by the supplier of the loss-in-weight feeding system. Their design criteria should not only include capacity and structural strength considerations but should also aim for minimum weight, because the tare weight should be minimized for maximum weighing sensitivity.

The material discharge regulator can be a control valve if the material is a liquid or slurry. Solids can be controlled by a rotary vane, belt, or vibrating feeders or by positioned knife gate valves. The choice is based on the required feed rate and on the physical characteristics of the process material.

System Sizing

In designing a loss-in-weight feeder system, the most important component is the hopper or tank. On the one hand, the hopper should be as large as possible, because the larger the hopper, the longer will be the running cycle and less frequent the filling cycle. On the other hand, for a particular feed rate (loss-in-weight rate), the system accuracy will decrease as the weight of the hopper and its contents increases. Therefore, a compromise is needed between these conflicting considerations.

It is recommended that the hopper be sized to hold the equivalent of about 15 min of discharge or approximately 15 times the maximum pounds-per-minute flow rate. The "heel" should equal 1/3 of the total hopper capacity, and the size of a charge during a refill cycle should be set to 2/3 of the total hopper capacity. The refill cycle should be completed in about 1 min or in less than 10% of the total cycle time.

CONCLUSION

The loss-in-weight feeders are not truly continuous weight rate control systems, because the gravimetric rate control is interrupted during the refill cycle. As a consequence, high accuracy totalization of the charge is not possible, although counters are available to indicate the number of times the hopper has been refilled.

The loss-in-weight systems are not used to feed easy-to-handle, free-flowing materials, because the belt-type gravimetric feeders are less expensive and suited for those applications. Loss-in-weight systems are usually considered for hard-to-handle liquid and slurry services. When no flowmeter or metering pump is available to detect or control the flow of a highly viscous, nonconductive, corrosive, or abrasive liquid, it is then that they are considered, and many highly satisfactory applications have been reported.

DUAL-CHAMBER GRAVIMETRIC FEEDER

The feeder illustrated in Figure 2.23q consists of two independently weighed hoppers. While the solids are being discharged from weigh hopper A, hopper B is being filled by the feed of fresh solids. When chamber B has filled up to its target weight (while the weight of hopper A is tared off), the feed is switched to hopper A, and hopper B is weighed prior to its contents being discharged into the process. Once chamber B has been weighed, its contents are discharged into the

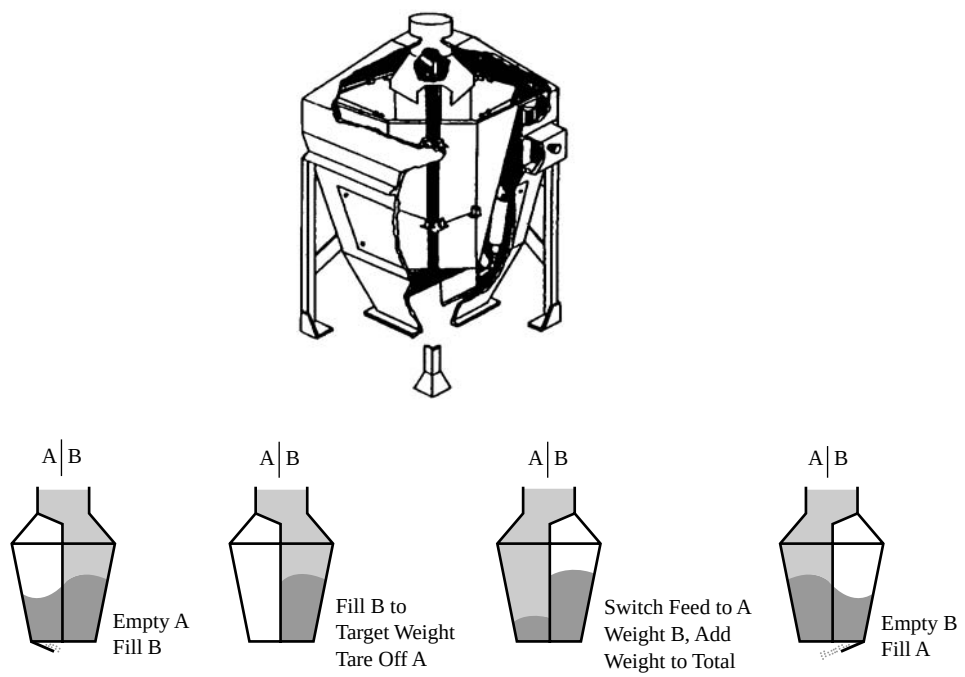

FIG. 2.23q
Dual-chamber gravimetric feeder. (Courtesy of Technicon Industrial Systems.)

© 2003 by Béla Lipták

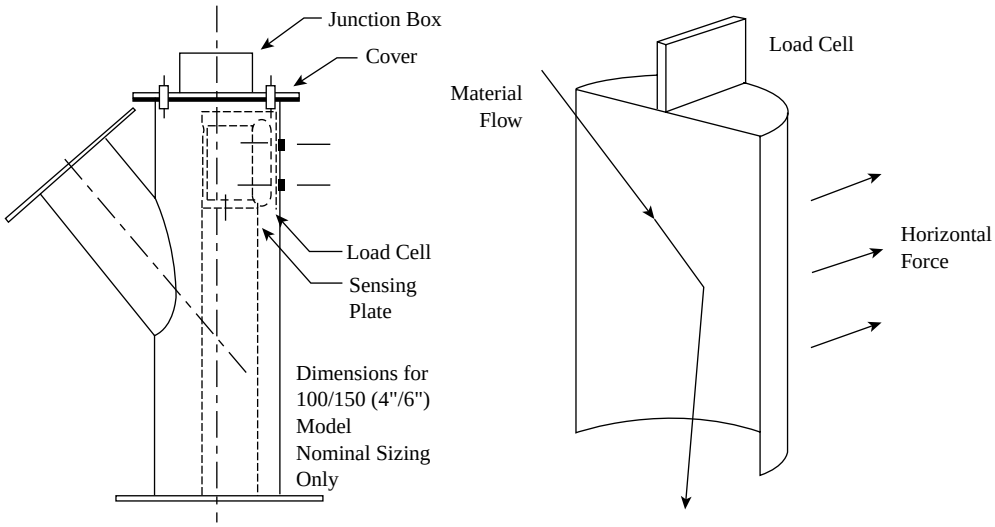

FIG. 2.23r
Cylindrical impulse flow element. (Courtesy of Milltronics Inc.)

process. After each discharge, the corresponding weight is added to the total weight that has previously been discharged.

The weighing cycle shown in Figure 2.23q is computer controlled. The only moving parts of the system are the diverter at the top and the two discharge gates at the bottom of the chambers. Because the hoppers are relatively small, their contents can be weighted accurately. The measurement error is usually about 0.5% of actual flow. Because the chambers are filled and emptied on a cycle period of around a minute, the discharged solids flow appears to be almost continuous. Where space is limited, the small size and vertical flow pattern of the equipment can also be of advantage.

This dual-chamber gravimetric feeder is suited for the measurement of free-flowing bulk solids and can be utilized as a continuous solids flowmeters or as batch recipe executors.

DYNAMIC SOLIDS FLOWMETERS

Whereas the previously discussed devices measure the flow rate while the solids are stationary on a belt or in a hopper, the devices described here measure the flow of falling or moving solid streams. These units detect either the forces needed to initiate the dynamic state by accelerating the solids or the forces resulting from the impact of the falling solids.

Impulse-Type Solids Flowmeter

When a stream of solids strikes a plate or a cylindrical surface at an angle, the resulting horizontal force component relates to its mass flow rate. The flowmeter illustrated in Figure 2.23r operates on the basis of this principle. The meter housing is manufactured from steel or stainless steel, and the sensing plate is made out of stainless steel. The units can handle free-flowing powers or granular and pelletized solid materials of up to 0.5 in. particle size.

The manufacturer claims both a very high sensitivity and wide rangeability (100:1). The smallest capacity unit is claimed to have a range of 300 to 30,000 lb/h (130 to 13,000 kg/h), and the largest unit can handle flows up to 650,000 lb/h (300,000 kg/h). The standard units can be operated at 140°F (60°C) temperature, but special units are available for operation at up to 450°F (232°C). Metering precision is claimed to be 1% of full scale. (If full scale is defined as the maximum flow the unit can handle, then at maximum turn-down, a unit with 100:1 rangeability will experience 100% error.) Microprocessor-based computer controls are available to integrate this flowmeter into batching or other automated material handling systems.

The principles of impulse and momentum detection have been used in liquid flowmeters such as the target, drag-body, and angular momentum designs. Their operation is based on Newton's second law of motion and on the conservation of momentum. These principles have also been successfully applied to solids flow measurement.

Figure 2.23s illustrates a design in which solid particles fall by gravity on a calibrated spring-loaded plate, the displacement of which is a function of the mass flow rate of the solids. A position transmitter is used to continuously detect the force caused by the falling particles.

Both of these solids flow transmitters (Figures 2.23r and 2.23s) can be used in continuous weighing applications. They can also be used in flow monitoring and control applications for batch or continuous services. Almost all types of solids can be measured by impulse-type flowmeters, including sugar, salts, cement, and ores.

Accelerator-Type Flowmeter

In this design, the solids stream enters the "accelerator" section of the meter by gravity (Figure 2.23t). The accelerator is driven at constant speed and, as the entering solids are

© 2003 by Béla Lipták

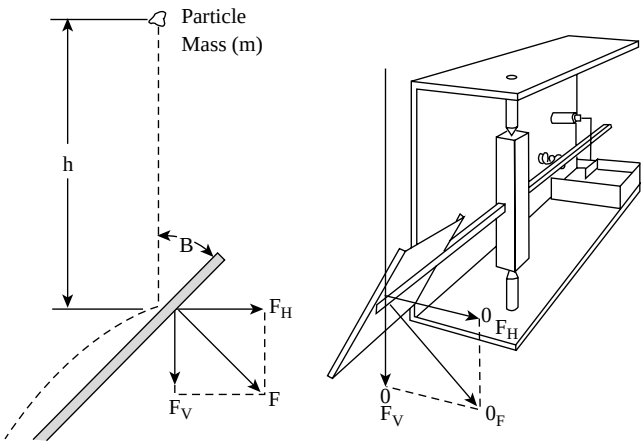

The horizontal component of the impact force on the plate is directly proportional to the flow rate of material over the plate

FIG. 2.23s
Impulse flowmeter. (Courtesy of Endress+Hauser Inc.)

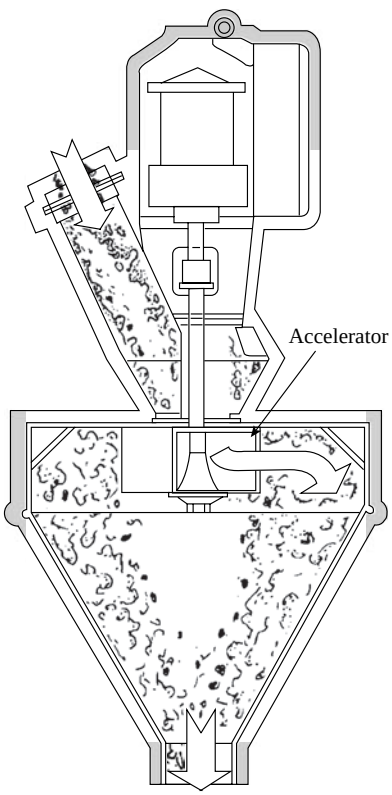

FIG. 2.23t
Accelerator-type solids flowmeter.

accelerated, they create a corresponding torque on the motor. Variations in this torque are detected by a torque transducer and amplified so that the transmission signal becomes directly proportional to the mass flow rate of solids.

The unit is designed for use on a wide range of materials, including powders, granules, pellets, and irregular solids as well as liquid slurries. The measurement rangeability of this

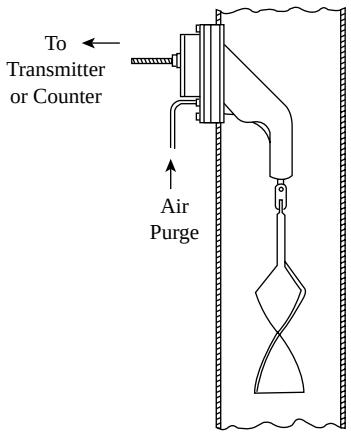

FIG. 2.23u
Volumetric solids flow detector.

flowmeter is fairly high (25:1), but so is the measurement error (around 2% FS).

Volumetric Flowmeters

The designs of volumetric solids flowmeters include the positive-displacement screw impellers, but if reasonable accuracy is desired, they should only be used to measure uniform-size solids such as lead shot. The operation of this type of instrument is similar to that of the turbine- or propeller-type liquid flowmeters except that a helical vane is used instead of the turbine.

As the flow of the falling granular material rotates the vane, a flexible cable transmits the rate of rotation to a counting mechanism mounted outside of the pipe or duct (see Figure 2.23u). This counting device can be a mechanical counter mounted directly onto the piping, or it can be a transmitter for remote monitoring and/or control. In this design, the transmitter output is determined by the position of a slotted cam. The cam is positioned by the balance between two rotations: the rotary motion produced by a synchronous motor and the rotary motion of the flexible cable.

The vane element is installed in the vertical position, and its bearing surfaces are protected by an air purge. To obtain acceptably accurate flow measurement, the instrument must be calibrated using the same process material, which it will measure after final installation. The measurement error of this flowmeter is around 3% of full scale, and its rangeability is about 10:1.

CROSS-CORRELATION SOLIDS FLOWMETERING

The concept of cross-correlation is based on tagging, which is the oldest of all flowmetering techniques. It consists of injecting some particles, a dye, a chemical, a radioactive material, or a pulse of any other form and measuring the time it takes for such a tag to travel a known distance. Cross-correlation flowmeters also detect the time of transit but, instead of tagging the process

© 2003 by Béla Lipták

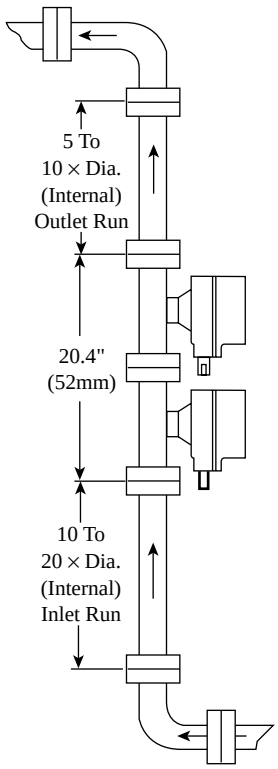

FIG. 2.23v
Solids flowmeter of the cross-correlation type. (Courtesy of Endress+Hauser Inc.)

fluid, they look at a noisy process variable and detect the time of travel of the recognizable noise pattern. If the noise pattern exists long enough to pass both detectors, computers are fast enough to recognize and interpret the readings.

The general subject of cross-correlation flowmetering is covered in more detail in Section 2.5. Here, we concentrate only on solids flow detection. A variety of sensors have been evaluated for this application, including gamma radiation, ultrasonic, and photometric designs. Figure 2.23v shows a solids flow detector that employs capacitance sensors. While further development is needed before reliable performance data can be reported, this metering technique does have potential, because it is not limited by hostile environments or by the characteristics of the solids being metered.

SOLIDS FLOW SWITCHES

Solids flow switches are used to detect abnormal flow conditions that result from either a flow or a no-flow condition. These can include detection of plugging or blockages, loss of feed, bridging in bins, overflowing of cyclones, rupture of bag filters, and the like. These switches should be both inexpensive and sensitive, because the amount of flow resulting from, for example, a bag rupture is not substantial. One solids flow switch (the *Triboflow*) that can detect such flows consists

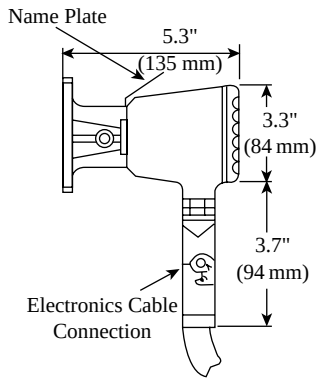

FIG. 2.23w
Microwave solids flow switch. (Courtesy of Endress+Hauser Inc.)

of a probe that collects the static charges of solid particles passing over its surface.

Microwave flowmeters of the continuous type are used to measure the flow of pulverized solids such as coal. Microwave switches detect the flow of solids by detecting only the motion or the absence of it. In a microwave motion detector, the transducer emits a 24-GHz signal into the flowing solid stream and analyzes the reflected frequency (Doppler effect) to determine the speed of the moving object that reflected it. The switch sensitivity is adjustable, so it may be used to trip at a velocity as low as 6 in./min (15 cm/min) when the pipe is full or at a velocity of one particle every 5 sec in a free-falling, gravity flow system. Units are available in aluminum or stainless steel. They can be connected to a pipe by a coupling or flange (Figure 2.23w) or can look through windows or nonmetallic walls without any openings. The units are intrinsically safe and can be used at working pressures up to 15 PSIG (1 bar). The switch can also observe motion at a distance of several feet from the detector and can tolerate the buildup of 0.5 in. of nonconductive coating or 0.1 in. of conductive coating.

MASS FLOW MEASUREMENT OF PULVERIZED COAL

To obtain the mass flow of pulverized coal being transported to a burner, one needs to know both the concentration (in mass density) and the velocity of the coal in the burner pipe. The main advantage of the technique described below is that it does not require *in situ* calibration, the use of isokinetic sampling, or rota-probing.

Detecting Mass Concentration

The concentration of the pulverized coal is measured using low-power, low-frequency microwaves, with each burner's pipe functioning as its own unique waveguide. Since the coal flow in all pipes served by the same mill has the same fuel source, variables such as moisture content, fineness, coal type, and so on are the same for all pipes. Therefore, the only

© 2003 by Béla Lipták

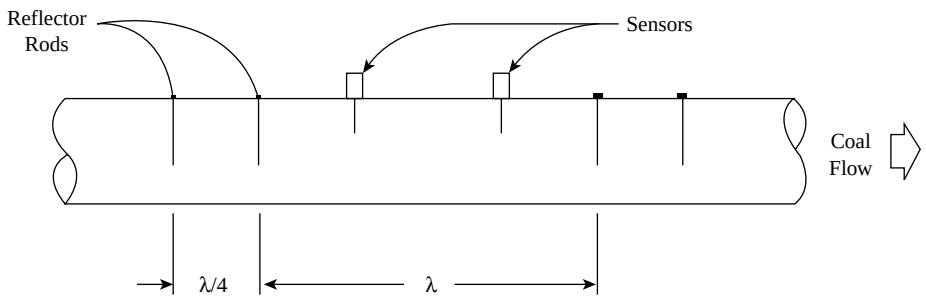

FIG. 2.23x
Standard Sensor and Rod Arrangement. (Courtesy of Air Monitor.)

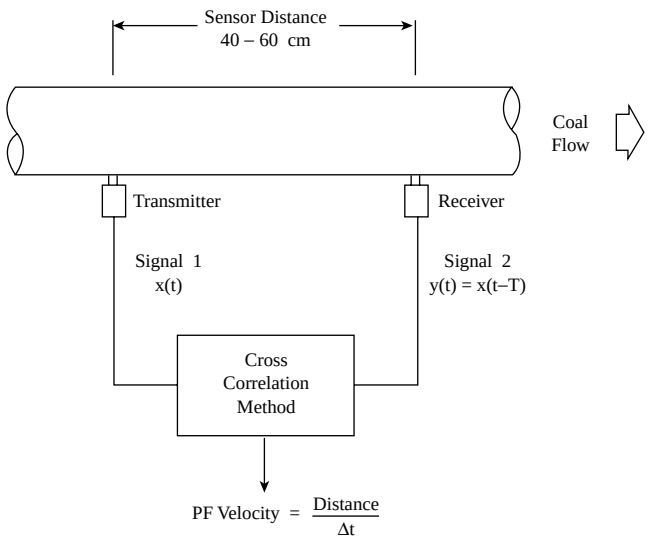

FIG. 2.23y
Cross-correlation configuration. (Courtesy of Air Monitor.)

pipe-to-pipe variable is the dielectric load, i.e., the concentration of the pulverized fuel in the section of pipe being measured. Starting with the measured microwave transmission characteristic of each empty pipe, variations in the dielectric load caused by changing coal concentration produce corresponding shifts in measurement frequency, resulting in quantifiable values that are reported as the absolute coal density in each pipe.

The concentration measurement is performed by two sensors aligned parallel with the longitudinal axis of the pipe; one functions as the microwave transmitter, and the other operates as the receiver, as shown in Figure 2.23x. Located upstream and downstream from the sensors are pairs of reflector rods—abrasion resistant, electrically conductive rods that prevent the microwave signal from leaving the measurement area and then being reflected back in the form of microwave noise.

Measuring the Coal Velocity

The velocity of the pulverized coal is measured by the cross-correlation method, which is conceptually depicted in Figure 2.23y. The same two sensors used for the measurement of coal concentration have a known separation distance. Stochastic signals created on the pair of sensors by the charged coal particles are nearly identical but are shifted by the time the pulverized coal needs to get from one sensor to the other. As the distance between the sensors is fixed, the velocity of the pulverized coal in the pipe can be accurately calculated.

Bibliography

AWWA Standard for Quicklime and Hydrated Lime, American Water Works Association, New York, 1965.

Baker, R. C., *Flow Measurement Handbook,* Cambridge University Press, UK, 2000.

Beck, M. S. and Plaskowsk, A., Measurement of the mass flow rate of powdered and granular materials in pneumatic conveyors using the inherent flow noise, *Instrum. Rev.,* November 1967.

Colijn, H. and Chase, P. W., "How to install belt scales to minimize weighing errors," *Instrum. Tech.,* June 1967.

Cross, C. D., Problems of belt scale weighting, *ISA J.,* February 1964.

Cushing, M., The future of flow measurement, *Flow Control,* January 2000.

Digitally controlled coal weigh feeder, *Power Eng.,* 1978.

Eren, H., Flowmeters, in *Survey of Instrumentation and Measurement,* S. A. Dyer, Ed., John Wiley & Sons, New York, 2001.

The Flowmeter Industry, 3rd ed., Venture Development Corp., Natick, MA, 1991.

Grader, J. E., Controlling the flow rate of dry solids, *Control Eng.,* March 1968.

Jenicke, A. W., Storage and Flow of Solids, Bulletin 123, Utah Engineering Experiment Station, University of Utah, Salt Lake City, UT, 1964.

Johanson, J. R. and Colijn, H., New design criteria for hoppers and bins, *Iron and Steel Eng.,* October 1964.

Kirimaa, J. C. J., Cross-Correlation for Pulp Flow Measurement, ISA/93 Conference, Chicago, IL, September 1993.

Linn, J. K. and Sample, D. G., Mass Flow Measurement of Solids/Gas Streams Using Radiometric Techniques, Report SAND-82–0228C, U.S. Department of Energy, Washington, DC, 1982.

Lipták, B. G., Flow measurement trends, *Control,* June 2000.

Mass, force, load cells, *Meas. Control,* October 1991.

McEvoy, L. D., Control systems for belt feeders, *InTech,* February 1968.

Mersh, F., Speed and Flow Measurement by an Intelligent Correlation System, Paper #90–0632, 1990 ISA Conference, New Orleans.

Miller, R. W., *Flow Measurement Engineering Handbook,* 3rd ed., McGraw-Hill, New York, 1996.

Nolte, C. B., Solids flow meter, *Instrum. Control Syst.,* May 1970.

Solids flowmeter works without obstructing flow, *Chem. Eng.,* September 1972.

Spitzenberger, R. M., Long-term accuracy of digital weigh feeders, *Chem. Process.,* April 1974.

© 2003 by Béla Lipták

Spitzer, D. W., *Flow Measurement*, 2nd ed., ISA, Research Triangle Park, NC, 2001.

Stepanoff, A. J., *Gravity Flow of Bulk Solids and Transportation of Solids in Suspension*, John Wiley & Sons, New York, 1969.

Van den Berge, H., Weighing on-the-fly keeps the process moving, *Cont. Eng.*, 23(9), 52.

Vines, G. L., Digital weigh feeders automate refractory production, *Brick & Clay Record*, June 1974.

Yoder, J., Flowmeter shootout, part I and II: new technologies, *Control*, February and March 2001.

Zanetti, R. R., Continuous proportioning for the food industry, *Instrum. Tech.*, March 1971.

© 2003 by Béla Lipták

2.24 Target Meters

W. H. HOWE (1966, 1982) **B. G. LIPTÁK** (1995)
W. H. BOYES (2003)

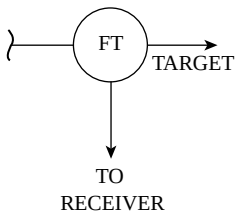

Flow Sheet Symbol

Design Pressure	Up to 3000 PSIG (20.70 MPa) with strain-gauge type
Design Temperature	Up to 300°F (150°C) through 600°F (315°C) with strain-gauge type; special units up to 1200°F (649°C)
Sizes	0.5 to 8 in. (12.5 to 203 mm) with standard and up to 48 in. (1.2 m) pipes with the probe design
Fluids	Liquids, gases, and steam; also handles two-phase flows
Flow Range	From 1 GPM (3.785 l/min), 1 SCFM (28 l/min), 3 lb/h (1 kg/h) to practically any value using the probe design
Inaccuracy	±0.5% of full scale for standard and to ±5% of full scale for probe type
Materials of Construction	Usually carbon or stainless steel; PVC targets and internals available
Cost	$1500 to $10,000 as a function of size, design, and materials of construction
List of Suppliers	Aaliant Division of Venture Measurement (www.venturemeas.com) J.W. Sweet Co.

Material buildup in front of orifice plates can cause both measurement errors and plugging when the process stream is a liquid slurry or a gas carrying wet solids. The annular orifice and the target flowmeter were introduced to solve this problem by providing an annular opening for the solids to pass through. This design is no longer marketed, and the only type of target flowmeter sold today is the drag-body-type target meter.

The drag-body target flowmeter (Figure 2.24a) detects the impact forces produced by the flowing fluid by means of strain-gauge circuitry. This unit is available in standard configurations (Figure 2.24b) and is also available in retractable probe designs (Figure 2.24c), which are used in larger pipe sizes in which it is desirable to withdraw the sensor periodically for cleaning without opening the process line.

The target meter is applied in a number of fields for measurement of liquids, vapors, and gases. It allows unimpeded flow of condensates and extraneous material along the bottom of a pipe while allowing unimpeded flow of gas or vapor along the top of the pipe. It has given consistent, dependable service on "difficult" measurements such as hot, tarry, sediment-bearing fuels to a pipe still where no other head-type meter has proved successful. There are no differential-pressure connections to "freeze." This is useful in steam flow measurement in exposed locations and for liquids that congeal at ambient temperature in pressure connections. Units are available for service up to 700°F (371°C), which is useful in steam service up to 200 PSIG (14 bars) pressure.

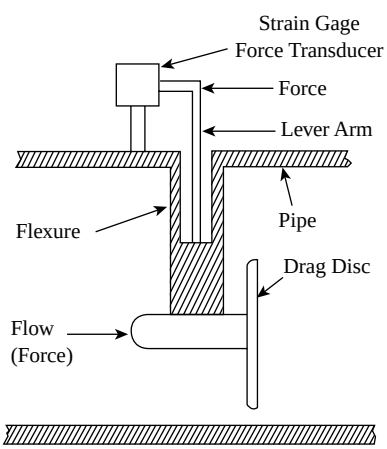

FIG. 2.24a
The drag-body flowmeter.

© 2003 by Béla Lipták

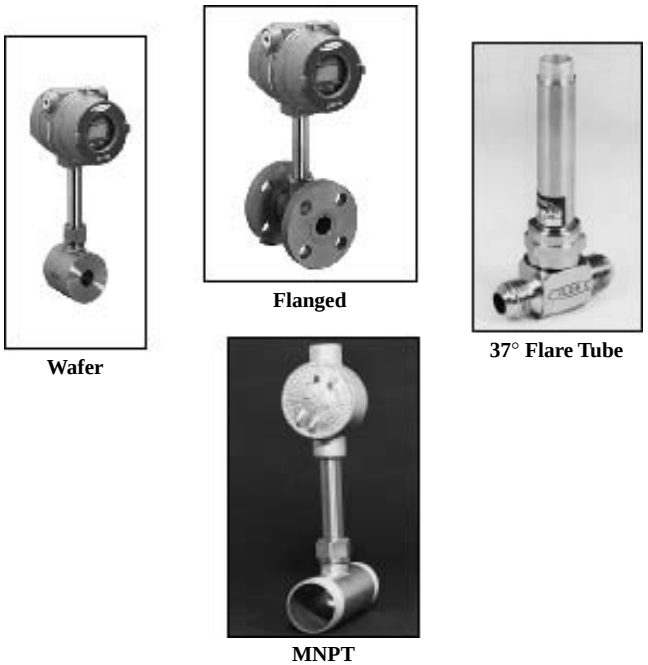

FIG. 2.24b
Standard target meter configurations.

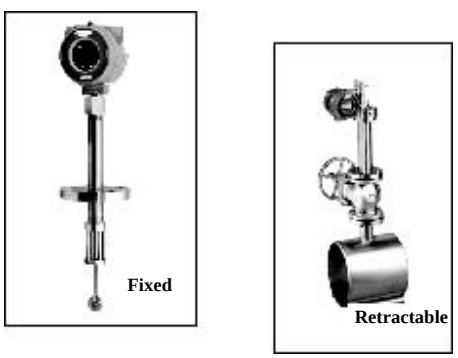

FIG. 2.24c
The insertion target flowmeter.

DRAG-BODY DESIGN

Drag-body targets are empirically derived, and a wide variety of sizes and shapes are available, according to the suppliers. Combined with wide-range force measurement transducers, a wide selection of full-scale flow rates is provided.

The manufacturers provide calibration data. The flow range through a particular-size meter can be varied by changing the target size and by replacing or readjusting the transducer.

Repeatability of output is good. Calibration accuracy includes not only the uncertainty of the primary element but also the characteristics of the transducer and the precision of the transducer adjustment. As is the case with some other proprietary devices, test data is unavailable for determination of flow coefficients from physical dimensions for different process fluids and operating conditions. On the other hand, target meters with accurate water flow calibration over almost any range of Reynolds numbers can be obtained. Transfer characteristics to other fluids based on Reynolds number are reliable. Because the transducer and the primary element are calibrated as a unit, overall accuracy of calibrated target meters is better than that of orifice-type systems.

Bibliography

Aaliant Div. of Venture Measurement, Mark, V., *Target Strain Gauge Flow Meter Installation, Operation and Maintenance Manual* M711, Revision B, 2001.

Blasso, L., Flow measurement under any conditions, *Instrum. Control Syst.*, February 1975.

Cushing, M., The future of flow measurement, *Flow Control*, January 2000.

Eren, H., Flowmeters, in *Survey of Instrumentation and Measurement*, S.A. Dyer, Ed., John Wiley & Sons, 2001, 568–580.

The Flowmeter Industry, 1985–1990, 2nd ed., Venture Development Corp., Natick, MA, 1986.

Hall, J., Solving tough flow monitoring problems, *Instrum. Control Syst.*, February 1980.

Miller, R. W., *Flow Measurement Engineering Handbook*, 3rd ed., McGraw-Hill, New York, l996.

Spink, L. K., *Principles and Practice of Flow Engineering*, 9th ed., The Foxboro Co., Invensys Systems, Inc., Foxboro, MA, 1967.

Spitzer, D. W., *Flow Measurement Practical Guide Series*, 2nd ed., ISA Press, Research Triangle Park, NC, 2001.

Stapler, M., Drag-Body flowmeter, *Instrum. Control Syst.*, November 1962.

© 2003 by Béla Lipták

2.25 Turbine and Other Rotary Element Flowmeters

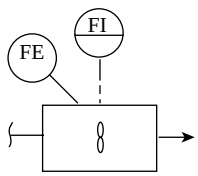

Flow Sheet Symbol

J. G. KOPP (1969) **D. J. LOMAS** (1982) **B. G. LIPTÁK** (1995)
J. B. ARANT (2003)

Types	A. Turbine flowmeters A-1. Single-Rotor A-2. Dual-Rotor B. Propeller, impeller, and shunt-flow types C. Insert, probe, or paddlewheel designs
Services	Relatively clean liquids, gases, and vapors (some units for gas service are also covered in Section 2.2)
Sizes	A-1. 3/16 to 24 in. (5 to 610 mm) in flow-through designs A-2. 0.25 to 12 in. (6.12 to 294 mm) in flow-through designs B. Impeller designs available from 3 to 72 in. (75 mm to 1.8 m) C. Paddlewheel units available for up to 12 in. (305 mm) pipes; insertion turbine probes not limited by pipe size, can also be used in open channels
Outputs	Generally, linear frequency outputs are provided, but 4- to 20-mA DC can also be obtained through conversion
Operating Pressure	A-1. 1500 PSIG (10.3 MPa) in standard and 5000 PSIG (34.5 MPa) in special designs A-2. ANSI 150 PSIG (1.03 MPa) up to ANSI 1500 PSIG (10.3 MPa) B. Impeller designs usually designed for 150 PSIG (1 MPa) C. Plastic paddlewheel units operable up to 200 PSIG (1.4 MPa) at ambient temperatures
Pressure Drops	A. Usually, one velocity head or about 3 to 5 PSIG (20 to 35 kPa) B. Usually less than 1 PSID (7 kPa) for the impeller types C. Negligible
Operating Temperature	A-1. –58 to 300°F (–50 to 150°C) in standard and –328 to 840°F (–200 to 450°C) in extended pickup designs A-2. –440 to 840°F (–268 to 450°C) B. Up to 160°F (71°C) for the impeller design C. The plastic paddlewheel units operable at up to 220°F (105°C) if operating pressure is <25 PSIG (<172 kPa)
Materials of Construction	A. Normally, stainless-steel housing and rotor with tungsten carbide sleeve bearings are used, but Hastelloy® C or other housing materials and ceramic or PTFE bearings are also available B. The impeller-type unit is provided with a plastic impeller and with aluminum, epoxy-coated carbon steel, or stainless-steel housing C. The plastic paddlewheel units are made of polypropylene, PVDF, Ryton™, and metallic parts
Error or Inaccuracy	A-1. Linearity is 0.25% of actual flow for turbine meters larger than 3/4 in. (19 mm) and 0.5% for smaller units. The repeatability (after calibration) is 0.02% of

© 2003 by Béla Lipták

actual flow. This performance assumes constant viscosity (within 0.3 and 3 cP) and density, proper installation including flow straighteners, a 10- to 15-diameter straight pipe run, and the use of a DC power supply and a preamplifier located at the meter.

A-2. 0.1 to 1% of actual flow with linearity and repeatability between 0.01 and 0.05%. Viscosity, density, velocity effects, and upstream straight run requirements are similar to A-1.

B. Shunt flowmeters are accurate within 2% of actual flow over a range of 10:1. The impeller-type units are also claimed to have a 2% of actual flow accuracy if operated at velocities exceeding 1 ft/sec (0.3 m/sec)

C. Linearity is 1% relative to actual velocity at point of insertion. Accuracy similar to pitot tubes, or 2 to 5%.

Rangeability

A-1. 10:1 unless limited by use of line-size units or by high process fluid viscosity

A-2. 10:1 to 500:1 for liquids and up to 1000:1 for gas flows

B. 10:1 for the shunt flow design

C. The optical designs provide flow rangeabilities in excess of 20:1

Cost

A-1. A turbine flowmeter with a preamp (but without readout electronics) and with 150-lb carbon steel flanges can be estimated as follows (1 in. = 25.4 mm): 0.5 to 1.5 in., $2200; 2 to 3 in., $2800; 4 in., $3500; 6 in., $5000; 8 in., $8000; 10 in., $12,000; 12 in., $16,000; 16 in., $28,000; 18 in., $32,000; 20 in., $50,000; 24 in., $75,000. Electronic readout devices might include auxiliary, explosion-proof power supply, $1200; remote register drive, $3500; frequency-to-analog converter with digital display, $1200; locally mounted, explosion-proof totalizer/flow indicator, $1200. Accessories include flow straighteners, strainers, batch control units, and two-stage shutoff valves.

A-2. Generally, 10 to 50% over A-1

C. The flow element of the plastic paddlewheel units for sizes between 0.5 and 12 in. (13 to 305 mm) costs between $250 and $500. Flow elements can be provided with analog indicators ($350), digital readouts ($500), recorders ($850), or batch totalizers ($600).

*Partial List of Suppliers**

ABB Instruments (www.abb.com/us/instrument) (A-1)
Badger Meter Inc. (www.badgermeter.com) (A-1)
Brooks Instrument (www.emersonprocess.com) (A-1)
Daniel Measurement and Control (www.danielind.com) (A-1)
Data Industrial Corp. (www.dataindustrial.com) (C)
Exact Flow (www.exactflow.com) (A-1, A-2)
Flow Research Corp. (www.flowresearch.com) (A-1)
Flow Technology Inc. (www.ftimeters.com) (A-1, C)
The Foxboro Co. (www.foxboro.com) (A-1)
Hays Cleveland (www.hayscleveland.com) (C)
Hoffer Flow Controls Inc. (www.hofferflow.com) (A-1)
Invensys Energy Metering (formerly Rockwell International, marketed by Equimeter) (www.invensysenergymetering.com) (A-1, A-2)
McCrometer (www.mccrometer.com) (B)
McMillan Co. (www.mcmillancompany.com) (A-1)
Miniflow Systems Inc. (A-1)
Omega Engineering Inc. (www.omega.com) (A-1)
Quantum Dynamics Inc. (A-2)
Rockwell Automation (www.automation.rockwell.com) (A-1)
Schlumberger Measurement Div. (www.slb.com/rms/measurement) (A-1)
Smith Systems Inc. (www.smith-systems-inc.com) (A-1)
Spirax Sarco Inc. (www.spiraxsarco.com) (A-1)
Sponsler Co. (www.sponsler.com) (A-1)

* *Note:* Most popular are units from Brooks, Daniel, Smith, Hoffer, and Badger.

© 2003 by Béla Lipták

Turbine meters are available for liquid, gas, and very low flow rates in both full-bore and insertion designs. The most widely used type is the full-bore meter for liquid service.

LIQUID TURBINE METERS

A turbine meter consists of a multibladed rotor suspended in the fluid stream on a free-running bearing (see Figure 2.25a). The axis of rotation of the rotor is perpendicular to the flow direction, and the rotor blades sweep out nearly to the full bore of the meter. The fluid impinging on the rotor blades causes the rotor to revolve. Within the linear flow range of the meter, the angular speed of rotation is directly proportional to the volumetric flow rate. The speed of rotation is monitored by an electromagnetic pickup coil, which is fitted to the outside of the meter housing. Two types of pickup coil are primarily used: reluctance and inductance. Both operate on the principle of a magnetic field moving through a coil.

In the reluctance pickup coil system, the permanent magnet is the coil. The field produced is concentrated to a small point by the cone (see Figure 2.25b). The turbine rotor blades are made of a paramagnetic material, i.e., a material that is attracted by a magnet. As a blade approaches the cone point, its magnetic properties deflect the magnetic field. This deflection causes a voltage to be generated in the coil. As the blade passes under the cone point, the voltage decays, only to be built back up in the opposite polarity as the departing blade deflects the magnetic field in the opposite direction. Thus, each blade produces a separate and distinct voltage pulse as it passes the cone. Because each blade sweeps a discrete volume of fluid, each electrical impulse represents the same discrete volume of fluid.

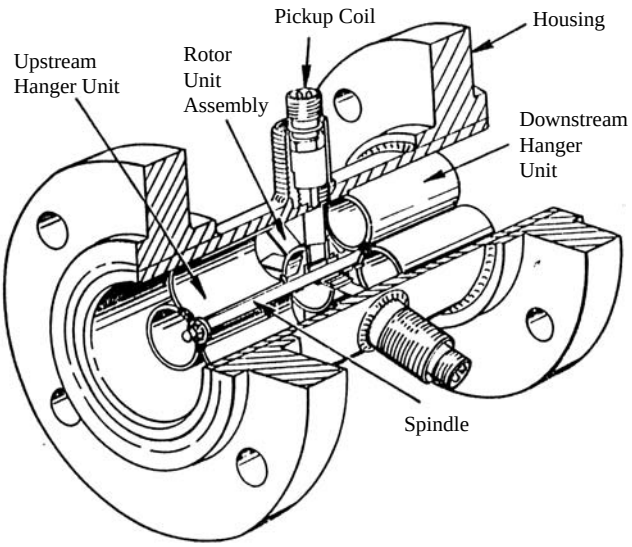

FIG. 2.25a
Cutaway view of a typical turbine meter.

With the inductance pickup coil system (see Figure 2.25b), the permanent magnet is embedded in the rotor. As the magnet rotates past the pickup coil position, it generates a voltage pulse for every complete revolution of the rotor.

The typical operating temperature range for standard pickup coils is –58 to 300°F (–50 to 150°C). Specially modified

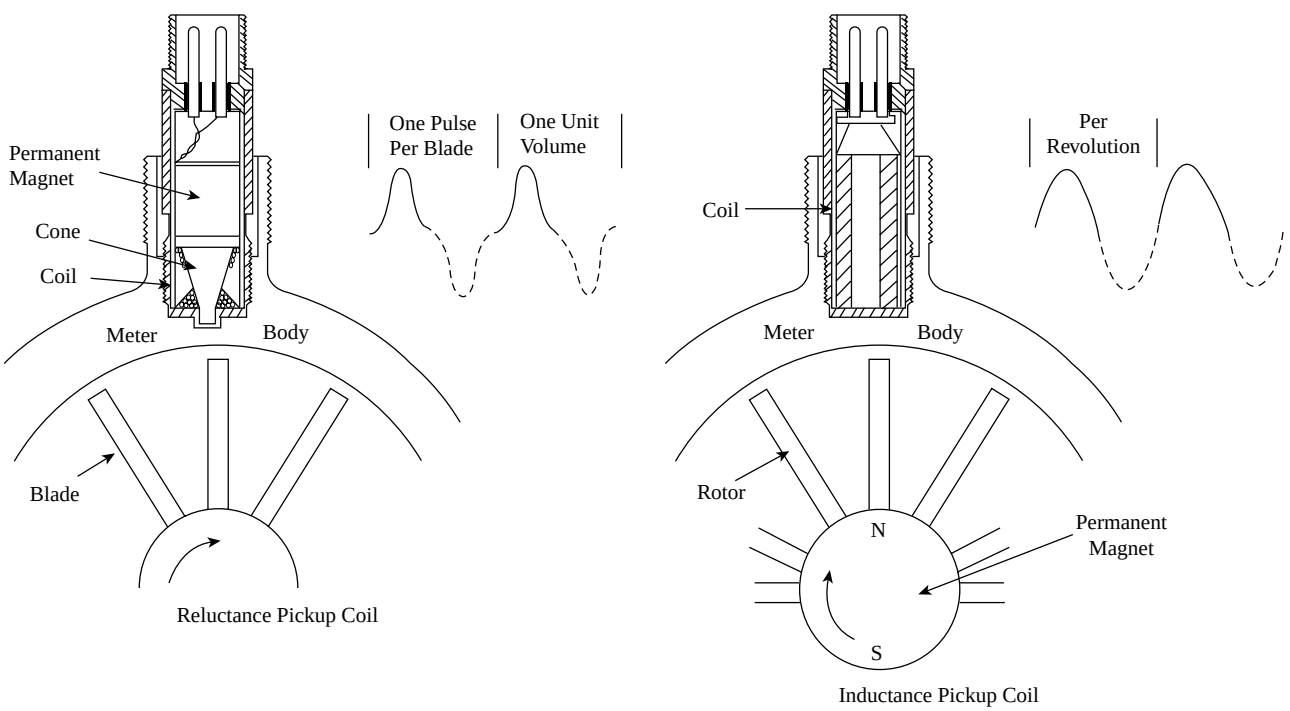

FIG. 2.25b
Alternative signal generation systems.

© 2003 by Béla Lipták

pickup coils are available, however, to cover operation at temperatures ranging from –328 to 840°F (–200 to 450°C). If the meter is located in a hazardous area, the pickup coil can be mounted in a flameproof or explosion-proof conduit box or, alternatively, an intrinsically safe pickup coil can be used in conjunction with zener barrier to provide an inherently safe system.

Electronic Display Units

The output signal from the turbine meter is a continuous sine-wave voltage pulse train with each pulse representing a small, discrete volume of fluid. Associated electronic units display total volumetric flow or flow rate and perform preset batching, control, automatic temperature correction, and other functions.

Most turbine meter systems incorporate a totalizer unit with a factorizing and scaling function. The pulse output from the turbine meter is not in direct engineering units. For example, each pulse might represent 0.001231 gal. The factorizer is set to this value, and the incoming pulses are multiplied by 0.001231. The display presented is then in gallons.

Alternatively, the totalizer can be a preset batch unit for automatically dispensing predetermined quantities of liquid. The required value is preset, and the totalizer then counts down to zero and provides an output (that is, contact closure) to operate a valve and terminate the batch. To provide better system repeatability and avoid hydraulic shock, the preset batch unit can be fitted with an advance warning contact, or it can incorporate a ramp function. In the former case, an output is provided, typically 2 to 5% before batch completion. This output partially closes the valve and the batch is "topped off" at a low flow rate up to the final preset quantity. The latter system includes a ramp function in the preset batch unit, providing an analog output signal at the start of the batch to open the valve at a predetermined rate. As the batch nears completion, the valve is progressively closed down to a low flow rate. The final valve closure signal is then given at the preset batch size.

Turbine meters volume flow at actual operating conditions. Consequently, if high accuracy is required, and the fluid temperature is subject to variation, automatic temperature correction is necessary. This involves measuring the liquid temperature with a platinum resistance thermometer and providing an analog control signal proportional to temperature. The temperature/volume relationship for the metered liquid is built into the automatic temperature correction (ATC) unit. Depending on the measured temperature, the ATC unit modifies the totalizer volume reading in accordance with the preset temperature coefficient of the liquid to give volume readout at the required reference temperature.

To safeguard against interference or lost pulses during signal transmission, a pulse comparator is often used on high-accuracy systems. This involves using two pickup coils (A and B) and taking two separate signal leads to the electronics. The pulse comparator unit monitors the two signals for integrity. If any pulses are lost or picked up on either line, the correct pulse sequence (A, B, A, B, A, B, and so on) will be interrupted. Any such false pulses are logged and the associated totalizer reading corrected accordingly.

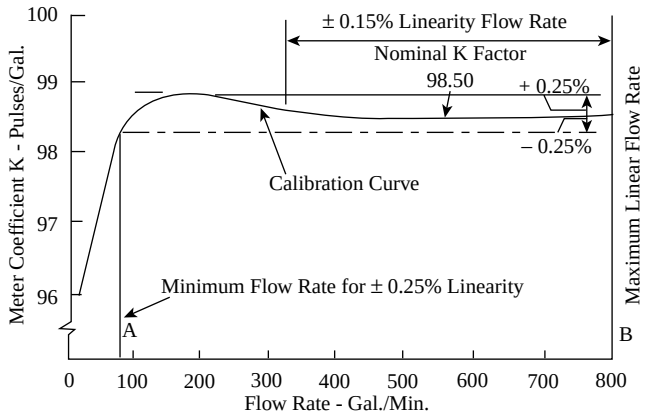

FIG. 2.25c
Typical calibration curve for a turbine meter.

Most turbine meter systems require flow rate indication or an analog control signal. These options can generally be provided from the basic totalizer unit.

Linearity and Repeatability

The nominal K factor (the number of pulses per unit volume) is primarily determined by the size and type of turbine meter. In practice, the actual K factor varies slightly between apparently identical meters due to manufacturing tolerances. Consequently, it is essential to calibrate each meter to establish its own specific K factor. A typical turbine meter calibration is shown in Figure 2.25c.

The graph is a plot of K factor against flow rate. It will be noted that, over the flow range A to B GPM, the K factor is a constant within the linearity tolerance band. The linearity tolerance band is typically ±0.25% of point over a 10:1 flow range for meters 0.75 in. (20 mm) and larger and ±0.5% of point over a 5:1 or 8:1 flow range on meters smaller than 0.75 in. (20 mm). It is important to note that the linearity is specified as "of point" or "of actual reading" and is not "of full-scale deflection."

The calibration in Figure 2.25c has a typical turbine meter hump in the low flow region (the lower 30% of the flow range). If this region is avoided, the turbine meter linearity can be improved to ±0.15% on the larger meters and ±0.25% on the smaller meters.

The repeatability of the turbine meter is typically ±0.02% of point at any flow rate within the linear range of the meter.

Viscosity and Density Effects

The principal fluid parameter that affects a turbine meter is viscosity. High viscosities change the nominal K factor and cause the calibration curve to fall away at a higher minimum flow rate (see Figure 2.25d). This causes a deterioration in the

© 2003 by Béla Lipták

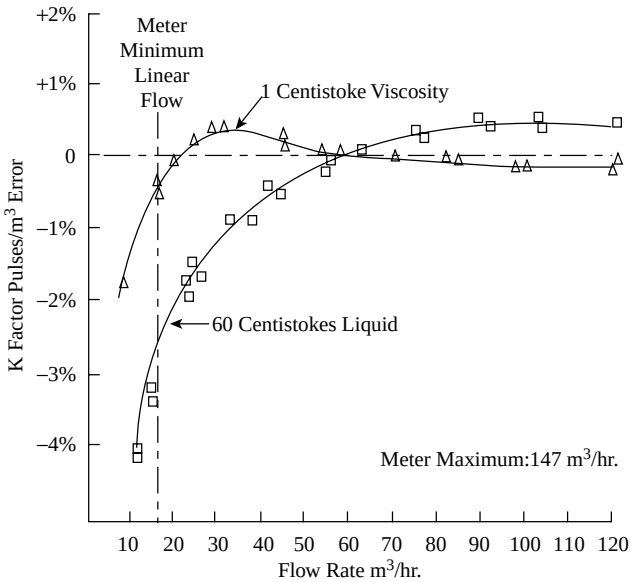

FIG. 2.25d
Calibration curves illustrating the effect of high viscosity on meter performance.

TABLE 2.25e
Typical Flow Capacity for a Range of Turbine Meters

Nominal Diameter		*Minimum Linear Flow*		*Maximum Linear Flow*	
Inches	*mm*	*GPM*	*m^3/h*	*GPM*	*m^3/h*
0.75	20	2.5	0.68	25	6.8
1	25	3.3	0.90	50	13.6
1.5	40	7.2	1.96	108	29.5
2	50	20	5.45	160	43.6
3	75	60	16.3	400	109
4	100	180	27.2	1000	272
6	150	250	68.1	2000	545
8	200	415	113	4150	1130
10	250	715	195	6400	1750
12	300	1025	280	9160	2500
14	350	1210	330	10,800	2950
16	400	1830	500	14,650	4000
18	450	2310	630	18,500	5050
20	500	2930	800	24,000	6540

linearity tolerance over the full flow range or, alternatively, a shorter usable flow range at the standard linearity tolerance.

The effect of viscosity cannot be easily quantified, because it depends on the size and type of turbine meter. In general, larger meters are less affected by viscosity than are smaller sizes. This does not imply that an oversize meter should be used on a viscous application. In fact, quite the reverse is true. On a high-viscosity application, it is advisable to size the meter so that its maximum permitted flow rate is as close as possible to the application flow rate. Thus, by tending to undersize the meter, the nonlinear portion of the calibration is avoided, and the best possible flow range is achieved.

The above comments about viscosity are applicable to the linearity of the meter. Turbine meter repeatability will not be affected in this way, and the standard repeatability tolerance will still be maintained at high viscosities. Consequently, a turbine meter can be used for such duties as on–off control on very viscous products. The control points can be determined impartially, and the meter will then repeat these readings even though its calibration may be completely nonlinear. To achieve reliable repeatability, the operating conditions must be constant.

Density has a small effect on the turbine meter's performance. On low-density liquids, the meter's minimum flow rate is increased as a result of the lower driving torque, but the change in density has a minimal effect on the meter's calibration.

Meter Sizing

Turbine meters are sized by volumetric flow rate. Each meter size has a specified minimum and maximum linear flow figure, and the meter normally should not be used outside these values. Typical flow capacities for a range of turbine meters from 0.75 in. (19 mm) to 20 in. (508 mm) are shown in Table 2.25e.

When sizing the meter, it is recommended that the maximum flow rate of the application should fall at approximately 70 to 80% of the maximum flow rate of the meter. This results in a good flow rangeability (about 8:1), and yet there is still approximately 25% spare capacity to allow for future expansion in production or increased metering requirements. Exceptions to this rule of thumb are applications that demand maximum rangeability, high-viscosity applications that demand maximum rangeability, and high-viscosity applications.

To achieve optimal performance and flow range, most turbine meters are designed for a maximum velocity of 30 ft/s (9.14 m/s). This velocity is higher than the velocities that exist in typical process pipelines, which are typically 7 to 10 ft/s (2.13 to 3.05 m/s). Consequently, if the turbine meter is the same size as the pipeline, the meter flow range will be limited to approximately 2:1 or 3:1. Hence, it is important to size the turbine flowmeter on the basis of volumetric flow rate and not on the basis of pipe diameter. If the turbine meter is sized on volumetric flow rate, it will end up to be smaller than the pipe size. This is a perfectly acceptable and normal practice if the meter is installed with the appropriate upstream and downstream straight pipe lengths and cone-type reducers (see Figure 2.25f).

Another aspect that must be considered when sizing the meter is available line pressure. Turbine meters have a typical pressure loss of 3 to 5 PSIG (20.7 to 34.5 kPa) at maximum meter flow rate. The pressure loss reduces with the square of flow rate. Consequently, if the meter is operating at 50% of maximum capacity, the pressure loss is 25% of that at maximum flow rate.

© 2003 by Béla Lipták

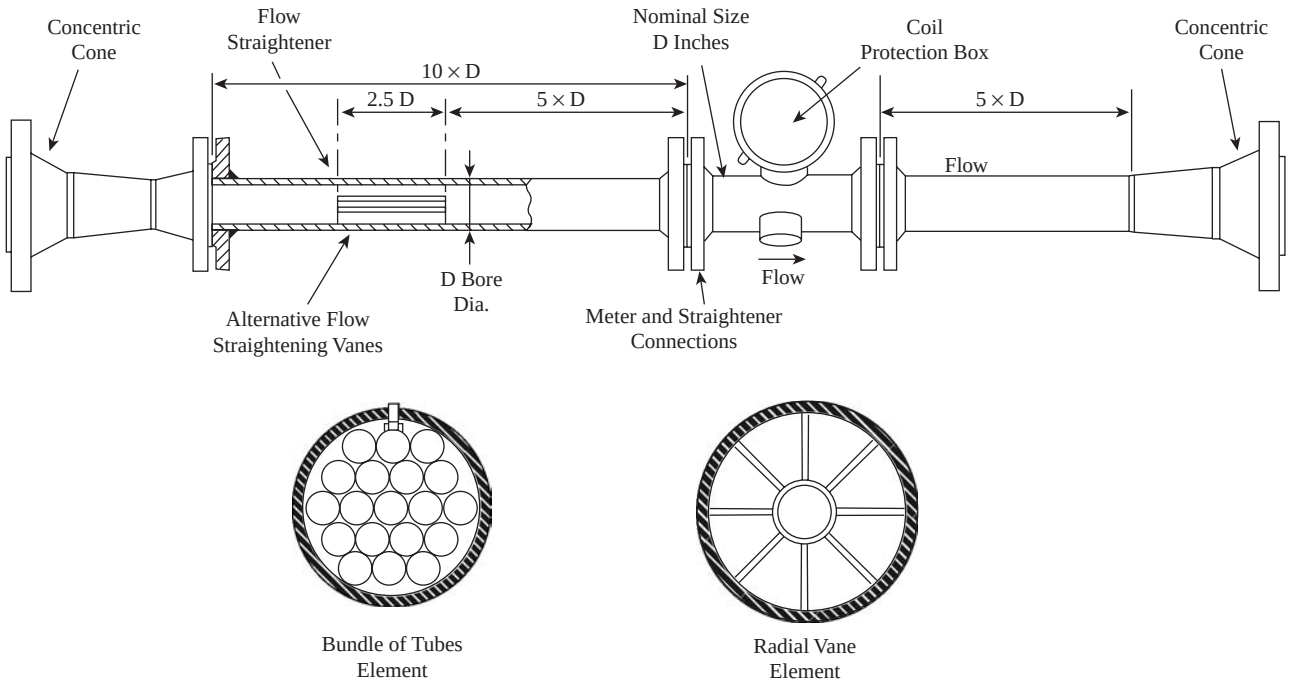

FIG. 2.25f
Recommended turbine meter installation pipework.

A typical pressure distribution through a turbine meter is shown in Figure 2.25g. As will be noted, the minimum pressure point occurs in the region of the rotor, with a substantial pressure recovery occurring immediately thereafter. It is essential to provide sufficient line pressure to prevent liquid cavitation or gassing in the rotor region. To ensure that cavitation does not occur, the downstream line pressure must be at least twice the net meter pressure loss plus 1.25 times the vapor pressure of the flowing fluid at its maximum operating temperature. When the backpressure on the meter is insufficient to meet this requirement, either the backpressure should be increased, or a larger meter operating in a lower region of its flow range (with a resultant lower pressure loss) should be considered. The meter flow range will be reduced by this approach.

If cavitation occurs, it will cause an error in the meter output, and the meter will read high. If severe cavitation is present, it will destroy some of the metallic parts and will cause serious overspeeding of the rotor, resulting in possible mechanical damage to the rotor and bearing.

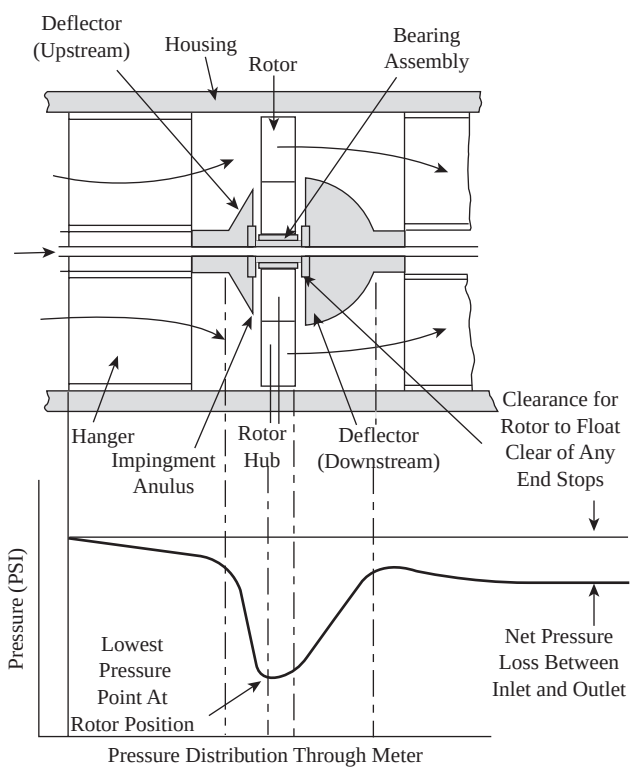

FIG. 2.25g
Typical pressure distribution through a turbine meter.

Pelton Wheel Meters

It is not practical to make turbine meters for very low flow rates below 0.25 GPM (1.58×10^{-5} m^3/s). Pelton wheel meters have been developed for these very low flow rates. The meter has a small orifice that projects the liquid onto a small Pelton wheel. The velocity of rotation is then measured electromagnetically, and a frequency output signal produced. By varying the diameter of the orifice, a range of flow rates can be covered

© 2003 by Béla Lipták

from 0.001 GPM through to 2 GPM (6.3×10^{-8} to 1.26×10^{4} m^3/s). Flow range varies with meter type but is generally between 10 and 20:1. The meters offer good repeatability (±0.1%) but are generally nonlinear and have a high pressure loss, typically 15 to 20 PSIG (103 to 138 kPa). Typical applications for this type of device are metering internal combustion engine fuel flows in test rigs and additive dosing.

Meter Characteristics and Features

The wetted materials of a turbine meter are generally stainless steel throughout except for the bearing. The most widely used bearings at present are tungsten carbide or ceramic sleeve bearings, which offer exceptional reliability and immunity to wear. These materials provide good corrosion resistance capability on a wide range of process liquids (Figure 2.25h). Where these materials are not suitable, other, more expensive possibilities, such as Hastelloy® C with PTFE bearings, are feasible. On clean liquids, some meter designs use ball race bearings to achieve greater rangeability.

Turbine flowmeters have also been manufactured without bearings (Figure 2.25i). In this design, the hydraulic forces of the flowing fluid kept the dual turbine in a suspended, "hovering" state. This meter is no longer being manufactured but is mentioned here because of the interesting concept behind its operation.

In very small sizes (under 1 in. or 25 mm), a single turbine can also be rotated without having any physical contact to the meter body. In the design shown in Figure 2.25j, the process fluid enters as a tangential jet and spins and stabilizes the turbine as it exits through the center of the rotor. The speed of rotation is detected optically by a photodetector. In the 8 cm^3/m to the 8 GPM (330 l/min) flow range, up to 30:1 rangeability is claimed.

Turbine meters are suitable for extremes of temperature. When appropriate pickup coils and bearings are selected, turbine meters can operate at temperatures varying from –328°F (–200°C) to 840°F (450°C). The turbine meter housing is a very good pressure vessel, because there are no tappings or protrusions into the meter bore. Consequently, most small

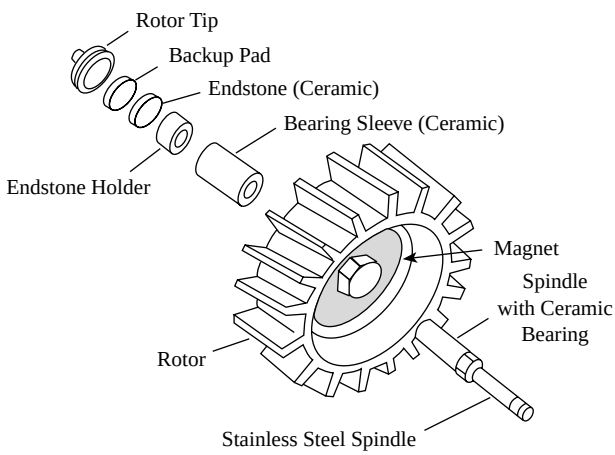

FIG. 2.25h
Ceramic bearings. (Courtesy of Badger Meter Inc.)

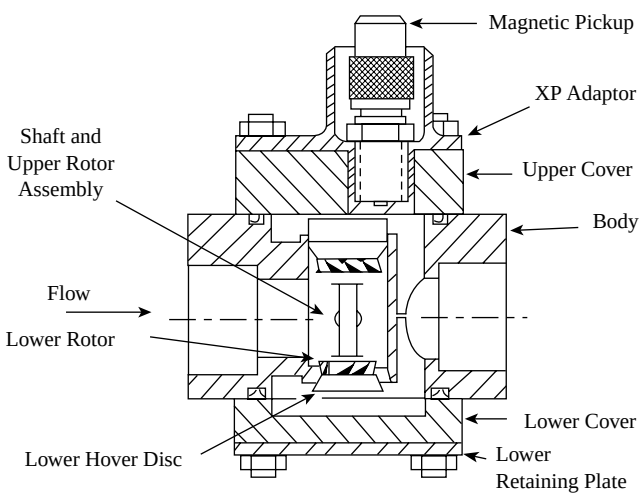

FIG. 2.25i
Bearingless turbine flowmeter. (Discontinued.)

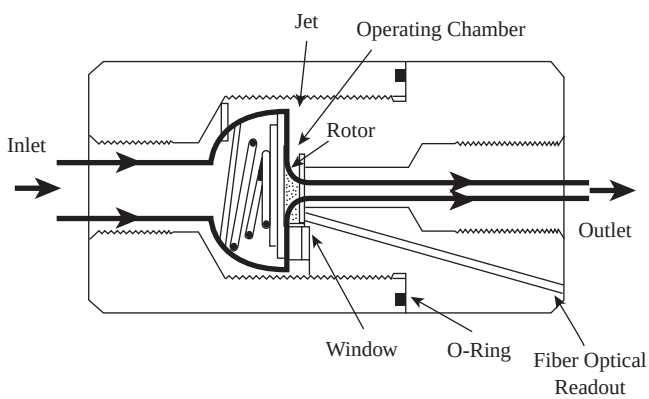

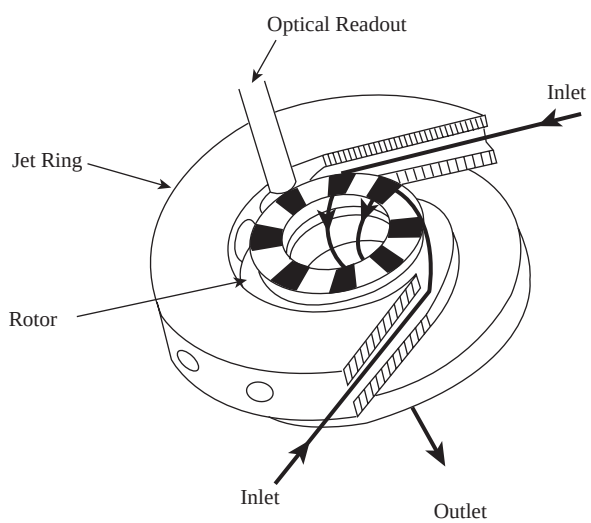

FIG. 2.25j
Unsupported single rotor with optical readout. (Courtesy of Miniflow Systems Inc.)

© 2003 by Béla Lipták

turbine meters are suitable for operating pressures up to 5000 PSIG (34.5 MPa), subject to the pressure limitation on the flanges or other end connections.

Another significant feature of the turbine meter is that it has a high throughput for a given size and is small in size and weight relative to the pipeline. Consequently, turbine meters can handle large-volume flow rates with a minimal requirement for space without needing special mounting stands or pads. Other features of the turbine meter include fast response time, suitability for hygienic applications, linear digital output, ease of maintenance, and simple installation.

The main limitations of the turbine flowmeter include high cost; limitation to clean and nonviscous services; the error caused by viscosity and density changes; the requirement for filtration and for 15 to 20 diameters of straight upstream pipe; the need for periodic recalibration (at operating conditions) and maintenance because the moving components are subject to wear; the potential problems of gassing, cavitation, and overspeeding; the need for relatively high backpressure; and the need for secondary components in providing a readout.

Due to its excellent performance characteristics, the turbine meter is widely used for high-accuracy royalty and custody transfer of crude oil, refined hydrocarbons, and other valuable liquids. Turbine meters are used throughout the petrochemical industry for many other applications, such as process control metering, blending, and pipeline leak detection. Turbine meters are also used in other industries for a broad range of applications, flow rates, and duties. More specialized applications include measurement of cryogenic liquids (liquid oxygen and nitrogen), high-pressure water injection to oil wells, aircraft fuel metering, test rig duty, and road tanker filling. Some of these applications require modified or special meters (for example, aircraft meters are made from aluminum alloy to save weight), but fundamentally the same meter is used in all cases.

Mechanical Installation

The turbine meter's high accuracy can be easily negated by a substandard installation. Upstream disturbances such as bends, valves, or filters may cause swirl and/or a nonuniform velocity profile, which, in turn, affects both the linearity of the meter and the nominal K factor. The errors may be positive or negative, depending on the direction of the swirl. If there is sufficient straight pipe between the disturbance source and the meter, the fluid shear or internal friction between the liquid and the pipe wall will condition the flow to an acceptable degree. The length of straight pipe required depends on the upstream disturbance and, in some instances, may have to be as long as 50 times the nominal meter diameter.

To avoid excessively long straight lengths of pipe, an internal flow-straightening element is generally used if good accuracy is required. The flow-straightening element may be a bundle of thin-wall tubes or a series of radial vanes inserted longitudinally in the upstream section of the straight pipe. The location of the vane is important; the recommended position is shown in Figure 2.25f. When a flow-straightening element is used, the upstream straight pipe requirement is reduced to 10 times the nominal meter diameter. The required downstream length is 5 times nominal meter diameter. Nevertheless, it is good practice to avoid installing the meter downstream of any severe source of disturbance, such as regulating control valves, whenever possible.

TABLE 2.25k
Typical Strainer Recommendations for Turbine Meter Installations

	Recommended Strainer			
Turbine Meter Size (Inches)	*U.S. Sieve No.*	*Wire Size (Inches)*	*Meshes/ Linear Inch*	*Opening (Inches)*
½ and smaller	120	0.0034	120.48	0.0049
¾ to 1 ½	45	0.0087	44.44	0.0138
2 and larger	18	0.0189	17.16	0.0394

If the meter is smaller in diameter than the process piping, 15° inclined angle concentric cones should be fitted at either end of the metering piping as shown in Figure 2.25f. Care should be taken with the internal alignment of all flange joints in the metering section; no gaskets should protrude into the fluid path.

To avoid mechanical damage to the turbine meter and to ensure optimal life, a suitable mesh strainer should be fitted upstream of the meter. The recommended mesh size depends on the size and type of turbine meter, but typical guidelines are given in Table 2.25k. Close attention should be paid to any application in which there are fibrous particles in the fluid. Contaminants of this type are frequently not removed by the strainer; the fibrous strands tend to wrap around the rotor and bearing, causing the rotor to slow down and the calibration to change.

Electrical Installation

The output frequency from a typical turbine meter pickup coil varies in frequency and amplitude with flow range. At low flows, the signal may be as small as 20 mV peak to peak. Consequently, if the turbine meter and electronic readout equipment are not from the same manufacturer, care must be taken to ensure that the two units are compatible with regard to pulse shape (sinewave or squarewave), signal frequency, and pulse amplitude and width.

Careful attention should also be given to the cable routing between the turbine meter and the electronics. Areas of electrical noise should be avoided, cable lengths should be kept as short as possible, impedance matching should be verified, and the appropriate shielded cable should be used. When long transmission distances are involved or the area is electrically noisy, a preamplifier should be fitted to the meter (see Figure 2.251).

© 2003 by Béla Lipták

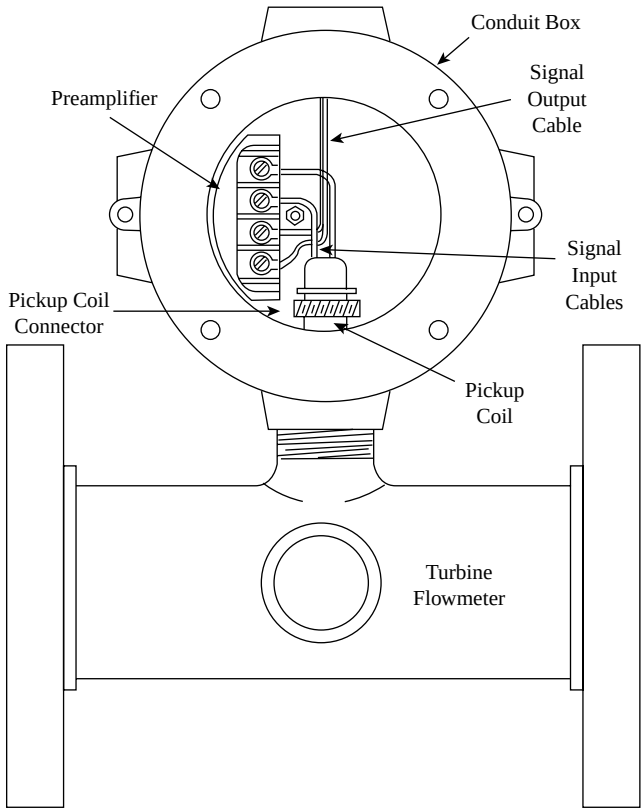

FIG. 2.25l
Complete turbine flowmeter assembly showing pickup coil and preamplifier.

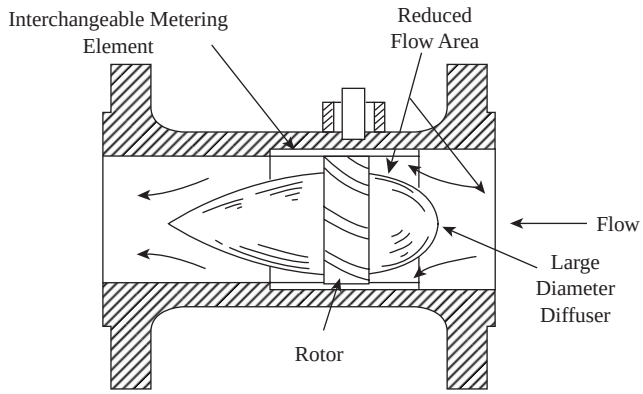

FIG. 2.25m
Typical gas turbine meter showing low ratio rotor annular-to-pipe area.

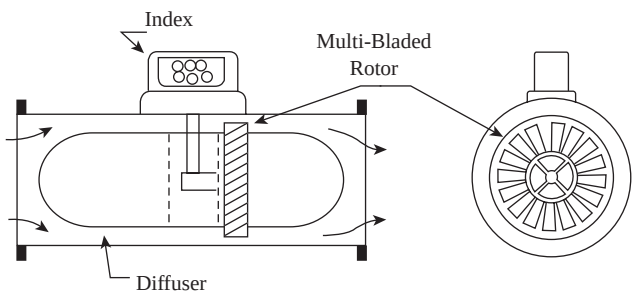

FIG. 2.25n
The axial flow gas turbine meter.

The preamplifier output signal amplitude is independent of flow rate and is typically a 12-V squarewave signal. This high-level signal can be transmitted for great distances, typically 15,000 ft (4572 m) and is far more immune to electrical interference than an unamplified pickup signal. The limitations of a preamplifier include increased cost and the necessity for a DC power supply at the meter. In some designs, an additional cable is required (a three-wire system as opposed to a two-wire system), and the ambient temperature is typically limited to 212°F (100°C).

GAS TURBINE METERS

The operating principle of the gas turbine meter is the same as already described for the liquid turbine meter. The major difference is that, as a result of the much lower density of the gas, the available fluid driving torque is greatly reduced. Consequently, gas turbine meters feature various design changes to enable the meter to operate at higher fluid velocities and to compensate for the lower driving torque. The principal changes are the use of larger hub diameters to give a smaller ratio of rotor annular area to pipe area (see Figure 2.25m), lightweight rotors, increased number of blades, modified blade angle, and alternative bearings. Some designs feature local mechanical volume flow indication and employ reduction gears in the rotor driving external gears via a magnetic coupling.

Gas turbine meters find application in fuel and other gas measurement applications because of their simplicity and wide rangeability. Figure 2.25n shows the principle of the axial flow gas turbine meter. A flow diffuser increases the flowing gas velocity and directs it to a multibladed rotor mounted in precision bearings. The calibrated index is driven by the rotor through suitable gearing. Gas turbine meters are available in sizes from 2 to 12 in. pipe diameter (50 to 305 mm) and flow ratings up to 150,000 ft^3/h (4500 m^3/h). A desirable characteristic of gas turbine meters is their increase in rangeability at elevated operating gas pressures. Rangeabilities in excess of 100:1 are attainable in large meters operating at 1400 PSIG (9.7 MPa).

As a result of the lower driving torque of the gas, it is essential to keep bearing frictional resistance to a minimum. The liquid turbine meter journal bearing is usually replaced by a ball race bearing. Any change in the bearing frictional resistance will result in a change in the meter calibration. Meters are frequently used in dust-laden gases, and the ball races are frequently of the sealed, self-lubricated type. Some designs, however, use gas bearings.

It is essential to calibrate the gas turbine meter initially, preferably under simulator operating conditions, to establish

© 2003 by Béla Lipták

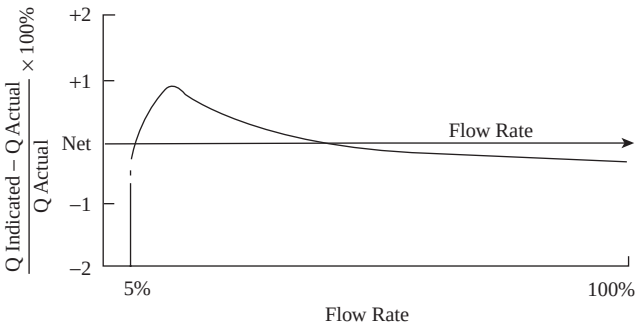

FIG. 2.25o
Typical gas turbine flowmeter calibration.

its own specific K factor. A typical calibration curve is shown in Figure 2.25o. Linearity is normally ±1% of actual flow over a flow range of 20:1. Gas turbine meters have specific minimum and maximum volumetric flow rate values, and it is essential to select the meter on the basis of these volumetric flow rates and not on the basis of the pipe size. The meter must be sized on the basis of actual volume flow and on the basis of standard reference units.

The turbine meter output frequency is proportional to the volumetric flow rate at the actual operating pressure and temperature. Pressure and temperature correction are required to convert the meter output into volume flow at reference conditions. If readout in mass units is required, either pressure and temperature correction can be used (although it does not compensate for variations in the composition of the gas) or the meter reading can be multiplied by a density gauge reading to give true mass flow.

In any compensation system, the volume and pressure or density should be measured at the same flow rate. The gas turbine meter has a typical pressure loss of one velocity head $[0.5(\rho V^2/g)]$ and a similar pressure distribution as that of the liquid turbine meter shown in Figure 2.25g. Consequently, if the pressure or density measurement is not taken at the rotor, a slight correction factor may be necessary to relate the measured value back to that pertaining at the rotor position.

Gas turbine meters are less sensitive to damage by grit and dust particles than are other positive-displacement meters. Gas turbine meters can also operate at higher pressures and have a high flow-rate capacity for a given meter size. In addition, if the meter fails, the gas flow is not obstructed, ensuring continuity of flow. Typical upstream pipe requirements are 20 times the nominal meter diameter.

Because of possible variations in the meter-bearing characteristics, calibration checks should be made at regular intervals if optimal performance is to be achieved.

TWIN-ROTOR TURBINE METERS

The single-rotor design of the turbine meters dates back to the early 1950s, when the United States aerospace industries began to use such meters extensively. At that time, they were not widely used in the process industries, because they were limited to clean services and considered somewhat fragile and therefore not always reliable. Even today, the twin- or dual-rotor turbine meter design is not well known outside the aerospace industry. The *twin-turbine* design uses two identical turbines. The *dual-turbine* design uses two turbines of different designs. The three suppliers listed in the feature summary at the beginning of this section offer three different design variations and also differing capabilities and operation.

History

By the late 1950s and early 1960s, the single-rotor turbine meters, which were used for their high accuracy and repeatability in aerospace fueling applications, were often overspun by flashing cryogenic fuels, resulting in bearing failure, and sometimes even in the loss of the turbine rotor. Such rotor losses could lead to engine failures if the turbine rotor enters the engines. This was clearly unacceptable.

Therefore, a design was needed, which in addition to extremely high accuracy over very wide flow ranges would also offer ruggedness, decrease bearing wear and improve reliability and calibration longevity. The solution was the twin rotor design, which is provided with a housing designed for 3000 PSIG (208 bar) working pressure. The actual operating pressure can be less, because it is limited by the pressure ratings of the end fittings. Special versions have been used in applications up to 40,000 PSIG (2777 bar). The meter can be used from cryogenic liquid hydrogen temperatures up to temperatures greater than 750°F (400°C). The flow sensor body and all major components are manufactured from stainless steel.

Thus, the two-rotor turbine meter was developed primarily to help overcome bearing wear and overspeeding and to provide wider flow turndown or rangeability. These same attributes are also useful in process industry applications. The twin-rotor turbine meters are capable of limiting the error to 0.1% of actual flow and providing a precision of 0.01% of reading. Their turndown can be 200:1 up to 500:1 on volumetric liquid flow applications and up to 1000:1 on gas or vapor mass flow applications.

Twin-Rotor Design

The twin-rotor design dates back to 1959, when it was used only for aerospace and military applications. In the 1970s, some major chemical companies had also started to use them for leak detection and pipeline accounting. This design withstands the flashing of fuel propellants, launch vibration, and shock while providing high-precision signal conditioning electronics. Applications included physiological measurements by NASA, where it was used to monitor astronaut breathing and urine flow during space missions. Military applications included their installation on jet engine test stands and on interservice flow transfer applications under U.S. Navy/NBS auspices. The QDI meter (as it is referred

© 2003 by Béla Lipták

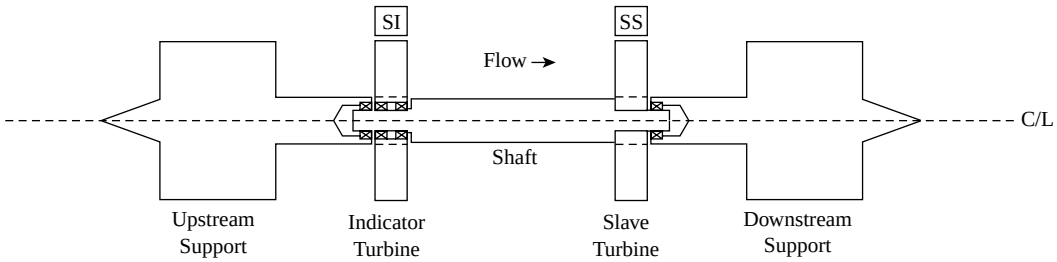

FIG. 2.25p

Twin turbine flowmeter initially designed for aerospace applications to provide long life, high rangeability, and accuracy. (Courtesy of Quantum Dynamics Inc.)

to, using the abbreviation of the manufacturer's name) is also used in flowmeter "prover" applications to check the calibration and accuracy of other flowmeters.

The QDI twin-turbine meter (Figure 2.25p) utilizes two identical turbines mounted on a single shaft, as follows:

- The downstream *slave* turbine is rigidly affixed to the sensor shaft, which rotates within the flow sensor on precision ball bearings. The bearings may use either stainless-steel alloy balls or specialty ceramic balls. Thus, the flow drives the "slave" turbine along with the flow sensor shaft.
- The upstream *indicator* turbine corotates on the driven shaft in the same direction as the shaft motion, thus minimizing the relative velocity between the indicator turbine and the driven shaft. This provides high rangeability while low angular velocities with respect to the shaft protect the indicator turbine bearings and provide improved dynamic response. Since the total angular velocity of the indicator turbine is distributed over the indicator turbine bearings and the corotating shaft bearings, the high rangeabilities can be achieved without deleterious bearing wear. Actual liquid volumetric flow rates are extremely repeatable over 200:1 turndowns or more where the linear correlation coefficients exceed 0.999999, whereby 1.0 indicates absolute perfect linearity. In compressible gaseous flow measurement applications, the mass flow rate turndown exceeds 1000:1.

The downstream turbine is referred to as the *slave* turbine, which performs the primary work of driving the shaft upon which the upstream *indicator* turbine bearings ride. Hence, this minimizes the latter's bearing RPM and friction and significantly improves rangeability, dynamic response, and bearing longevity.

Applications and Features The QDI twin-turbine meter uses an integral upstream flow profile control device to create a relatively flat flow profile, even in the low laminar flow regime. The use of integral upstream flow profiler allows for the use of a slim central shaft and long turbine blades. This contrasts with single-blade turbine meters, which utilize a large central body to accelerate the flow past the short turbine blades having high blade angles. Thus, the aerospace twin-turbine design also has a lower pressure drop. This is important in aerospace and cryogenic applications where high pressure drops could cause flashing.

The patented zero-drag RF pickups on both the indicator and slave turbines provide a powerful, high-reliability diagnostic tool, because redundant flow measurement is provided. In addition, bearing wear or contamination can be detected as changes in the relative velocity between the indicator and slave turbines. Since the slave turbine/shaft bearings experience the greatest prolonged rotation, they will begin to show wear long before the indicator turbine does. An advantage over single-turbine designs is that, in this design, even after bearing wear is thus detected, the indicator turbine will continue to provide accurate flow for some extended time period, thus allowing scheduled maintenance of the twin turbine flow sensor.

The slim central shaft of the twin-turbine design allows larger flow volumes to pass through the flow sensor without causing high pressure drops. The QDI flow sensor is used to measure flows at high velocities, such as in natural gas fired power plant, where the gas velocity reaches mach 0.3. In applications where measurement rangeability was previously obtained by using several orifice plates installed in parallel runs (Figure 2.15u), the QDI sensor can provide considerable cost savings by eliminating multiple meters and associated pipes and valves.

This flow sensor can also be used to measure bidirectional flows, with flow direction determined by quadrature. This capability, along with high dynamic response, was used to monitor astronauts' respiratory patterns. More recently, this capability has been used for detecting in–out flow in commercial gas storage applications such as in large holders or in underground storage caverns such as salt domes.

In the case of cryogenic liquid fuel loading systems, the same meter can handle liquid, gas, and two-phase flows. More recently, it has been successfully applied to high-accuracy petroleum and petrochemical custody transfer systems, power plant combustion control, pipeline leak detection based on mass balance principles, batch charging, and metrology applications involving high-value liquid or gas products such as ethylene, propylene, and so on.

© 2003 by Béla Lipták

The mechanical/electronic reliability of the standard unit, as calculated per military specifications, yields an MTBF of 2.5×10^5 t (28 yr). Using space-grade components yields an MTBF of 6.14×10^5 h (70 yr).

DUAL-TURBINE DESIGNS

Dual-turbine meters differ from twin-turbine designs in that they use two turbines of different blade angles and configurations, each rotating on its own bearing systems on its own shafts. These designs are more susceptible to bearing damage due to overspeeding than are the twin-turbine units, and care must be taken not to subject such flow sensors to excessive flow velocities.

Dual Turbines Rotating in the Same Direction

In the 1960s, Rockwell International was studying the problems of wear and the associated loss of accuracy in turbine meters, and the company also came up with idea of using a dual-rotor turbine system to reduce the effects of bearing friction and wear. As a result, Rockwell designed its dual-turbine sensor (Figure 2.25q) primarily for clean gas services such as natural gas, and it provides adequate service life for its intended end use in the gas pipeline and distribution industries. (Rockwell subsequently sold off this dual-rotor design to Invensys Energy Metering, located in DuBois, PA.)

The size of this meter ranges from 4 in. (100 mm) to 12 in. (300 mm). Its materials of construction are normally aluminum or carbon steel. The aluminum model is rated for a maximum working pressure of 175 PSIG (12.15 bar), whereas the steel model is rated from ANSI 150 (275 PSIG or 19 bar) to ANSI 600 (1440 PSIG or 100 bar). Temperature ratings for the meters are –20 to +165°F (–29 to +74°C), but a special low-temperature steel model is also available that can be used down to –40°F (–40°C).

The rotor bearings in this meter design require lubrication. This can be done manually or at specified time or volume intervals by an automatic, meter-mounted system. Mechanically, this meter is rather complex, but the needed maintenance can be done in line if the process flow is shut down or bypassed. Precalibrated measuring assemblies can be provided for quick change-out needs. The meter is fitted with a flow conditioning inlet nose cone that reduces the straight upstream pipe length required, but damage to this nose cone can result in significant calibration errors.

Operation This dual-turbine meter uses two turbines that are located close together and rotating on two independent shafts. The upstream turbine has a high blade angle, and the downstream turbine has a very low blade angle. Since the upstream turbine blade angle is much higher than that of the downstream one, the latter will rotate at a slower angular velocity. The flow rate is measured as the difference in the speed of the two rotors. In theory, when the bearings begin to wear, the upstream turbine will spin slower, changing the fluid exit angle and causing the downstream indicator turbine to adjust its speed by an equal amount. This is claimed to adjust away bearing wear and also provide bearing diagnostics, but the validity of this claim depends on the assumption that the wear and contamination is the same on both sets of bearings.

This flow sensor has a very large central hub, which also contains the sensor's mechanical index gearing. The large hub accelerates the flow through a narrow annulus, which results in a somewhat high pressure drop. Since both the upstream and the downstream turbines rotate on a single set of bearings, the meter should not be subjected to excessive flow rates, given that this might damage the bearings. Also, this meter should not be used where slugs of condensate flow may occur, since this also will cause damage.

The inaccuracy of the meter is claimed to be ±1.0% of actual flow over the entire operating range, and the normal linearity of ±1.0% can be improved to ±0.5% if high-pressure calibration is used. The repeatability is better than 0.05%, and reproducibility is better than ±0.1%. While the above-described performance is not much superior to single-rotor conventional turbine meters on natural gas applications, this meter is more immune to positive or negative swirl, pulsation, jetting, and contamination. This meter is also autocorrecting.

Dual Turbine with Counter-Opposed Rotation

The dual-rotor turbine meter from Exact Flow is relatively new (Figure 2.25r); the company's meters date back to about 1995. It is similar to the QDI meter (Figure 2.25p) in some ways, but there are marked differences as well. These contribute to performance improvements (such as high turndowns) but also to limitations (such as being limited to liquid service only), because its bearings are susceptible to damage by overspeeding.

In this design, the two turbines have counter-opposed blade angles and rotate on a single shaft. The swirl from the upstream turbine thus impinges on the downstream one at near right angles, causing the downstream turbine to rotate faster and in the opposite direction (unlike the corotation of the QDI twin turbine). This approach improves metering rangeability by forcing the downstream indicator turbine to spin at higher RPM at low flow rates, but it can also make the bearings more vulnerable.

This dual turbine also utilizes a large central hub that constricts the flow into a narrow annulus, thus accelerating the flow past the downstream indicator turbine and promoting the onset of the turbulent flow regime in the narrow annulus. The disadvantage of this increased velocity is the corresponding increases in the pressure drop across the flow sensor.

Because each turbine is mounted on its own set of bearings, as is the case with single-rotor meters, care must be taken not to subject this meter to excessive velocities or to flashing liquid flows, because such conditions will likely result in excessive bearing wear or failure. This design is not

© 2003 by Béla Lipták

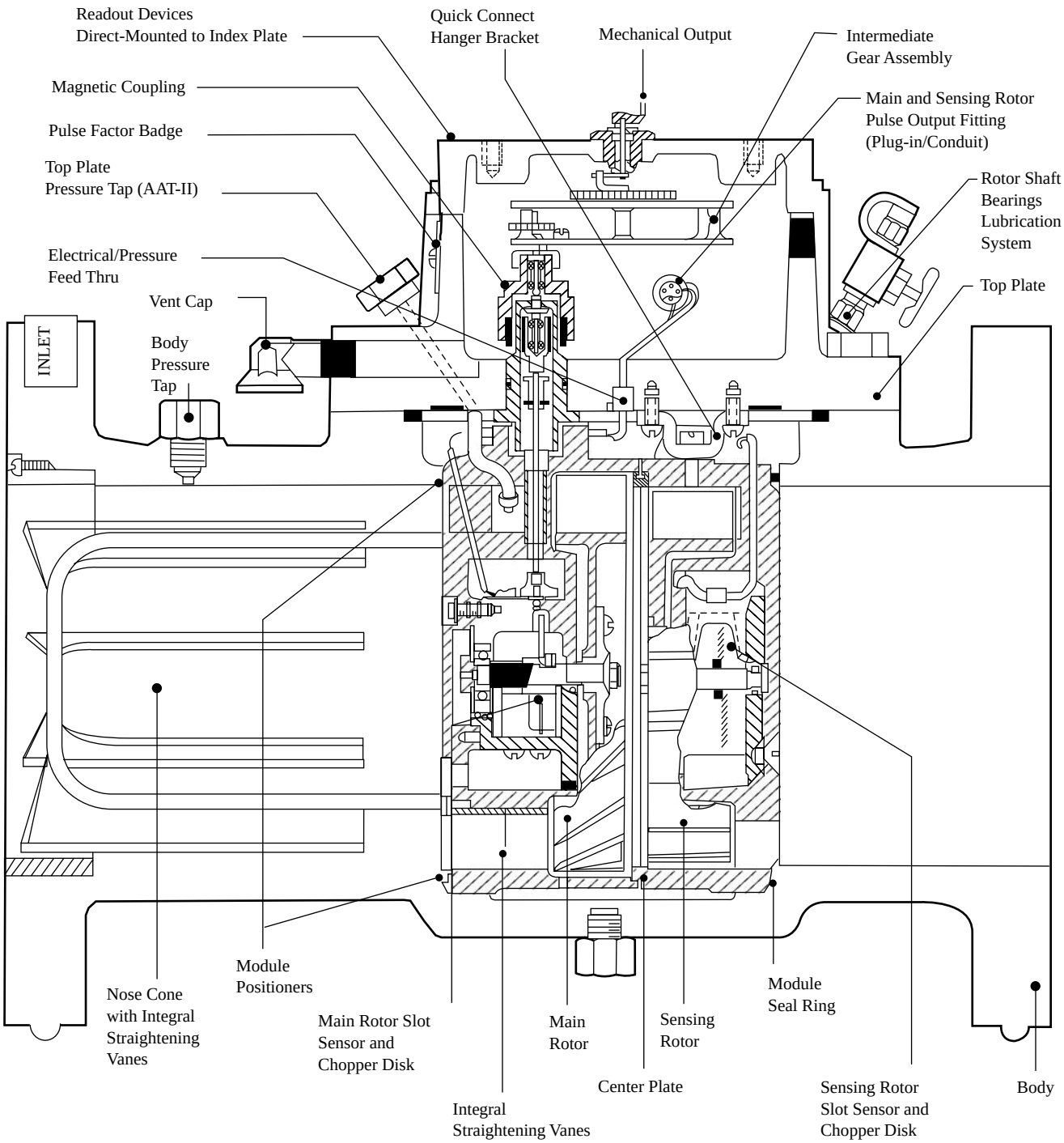

FIG. 2.25q

Auto-correcting dual-rotor turbine flowmeter used in natural gas pipeline applications. (Courtesy of Invensys Energy Metering.)

immune to overspeeding damage, and the bearing wear is also worse than with the QDI design. Both turbines in this dual-turbine flow sensor can be instrumented in the same manner as in the QDI twin-turbine sensor to provide bearing diagnostics.

Standard sizes range from 0.5 in. (12 mm) to 4 in. (100 mm), but special units up to 12 in. (295 mm) can be obtained. Essentially all ANSI pressure ratings are available, and the available operating temperatures range from –40°F (–40°C) to 450°F (232°C). Claimed calibration inaccuracy is ±0.1% of actual flow, and linearity is ±0.15 to 0.20% of rate with a typical repeatability of ±0.02%. Turndown ratio can range from 300:1 to 700:1 and, if reduced accuracy is acceptable, can reach up to 1000:1.

© 2003 by Béla Lipták

Principle of operation

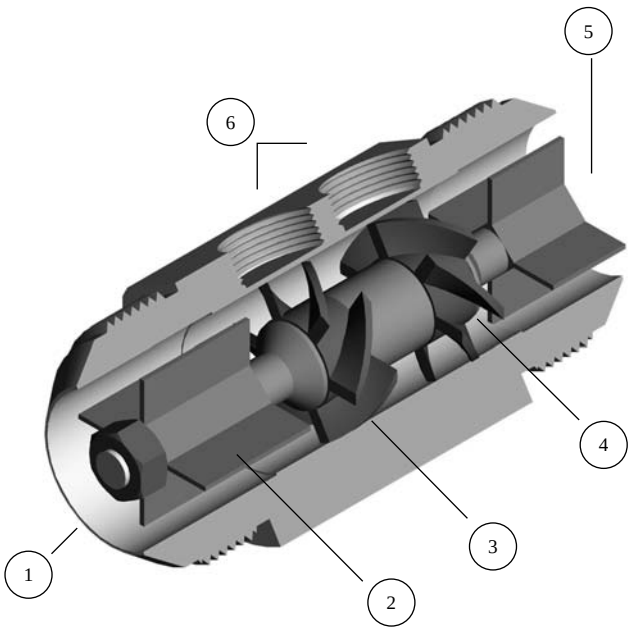

1. Unconditioned flow enters flowmeter.
2. Straightening vanes smooth the flow as it enters the first rotor.
3. Flow transfers momentum to the first rotor making it spin counterclockwise. Flow then exits rotor with a clockwise spin.
4. Flow enters second rotor with a nearly perpendicular angle of attack thereby transferring additional momentum to the second rotor. This additional momentum results in greatly extended turndown.
5. Flow exits flowmeter.
6. A pick-up transmits the rotor frequency signal to remote instrumentation. Optional dual pick-ups transmit signals from both rotors - the sum of which is a constant for any given flowrate. This provides powerful diagnostics and swirl insensitivity. In addition, the dual rotor effect increases the turndown ratio by 10 times that of a standard single rotor turbine meter.

FIG. 2.25r
Dual-turbine flowmeter, provided with dual pick-ups and with counter-opposed turbine rotation. (Courtesy of Exact Flow Corp.)

This dual-turbine flow sensor is primarily for nonflashing liquid flow applications and is not recommended for use on two-phase flow streams. The track record of this flowmeter, as compared to the QDI, is relatively limited, given that only a moderate number of existing field applications are now in operation. Yet, because of the inherent advantages of increased reliability and rangeability resulting from having two rotors (over single-rotor designs), the numbers of both QDI and Exact Flow installations are likely to rise in the coming years.

Comparing the Three Two-Turbine Designs

QDI is the only supplier that markets only complete flow measurement systems, which include all electronics and algorithms, rather than just turbine meters. This is because their system employs proprietary designs and algorithms. They do not sell just the turbine meters—only complete and totally integrated systems. Thus, the total responsibility for the system, including documentation and warranties, comes from them. This can be a big plus. QDI is also the only turbine meter design that is qualified as a continuous U.S. Defense Logistics Agency "certified quality vendor" and by the U.S. Navy as a "quality/lowest cost of ownership" equipment contractor.

IMPELLER AND SHUNT FLOWMETERS

Another flowmeter widely used in steam and gas flowmetering and totalizing applications is the shunt flowmeter illustrated in Figure 2.25s. It consists of an orifice plate in the main flow line and a self-operating rotor assembly in the bypass.

As gas flows through the meter body, a portion of flow is diverted to drive the fan shaft assembly, which is rotating on a jewel bearing. A second set of blades on the fan shaft, rotating in damping fluid, acts as a damper or governor. Rotational speed of the shaft is proportional to the rate of flow at all rates within the normal range of the meter.

These flowmeters are available in sizes of 2 in. (50 mm) and larger. Their inaccuracy is around ±2% of the actual flow, and their rangeability is about 10:1.

Impeller- and propeller-type flowmeters are widely used in wastewater and irrigation application where large flows and line sizes (up to 48 in. or 11.2 m) are required and cost is more important than accuracy. Accuracy is claimed to be 2% of reading. As illustrated in Figure 2.25t, in this meter, a corrosion-resistant plastic impeller is connected to a flexible and self-lubricating cable, which through a magnetic coupling drives an external mechanical register without requiring gears for its operation. The register is sealed from the process and requires no external power for operating a six-digit totalizer and a flow rate indicator. Easy access and removal of the complete flowmeter is provided through a cover plate. Straightening vanes are provided to improve the flow profile. The materials of construction can be aluminum, epoxy-coated carbon steel, plastic, or stainless steel.

INSERTION-TYPE FLOWMETERS

Both the liquid and gas turbine meters described above are full-bore metering devices; all flow passes through the meter. Their cost increases proportionately with pipe diameter. The insertion

© 2003 by Béla Lipták

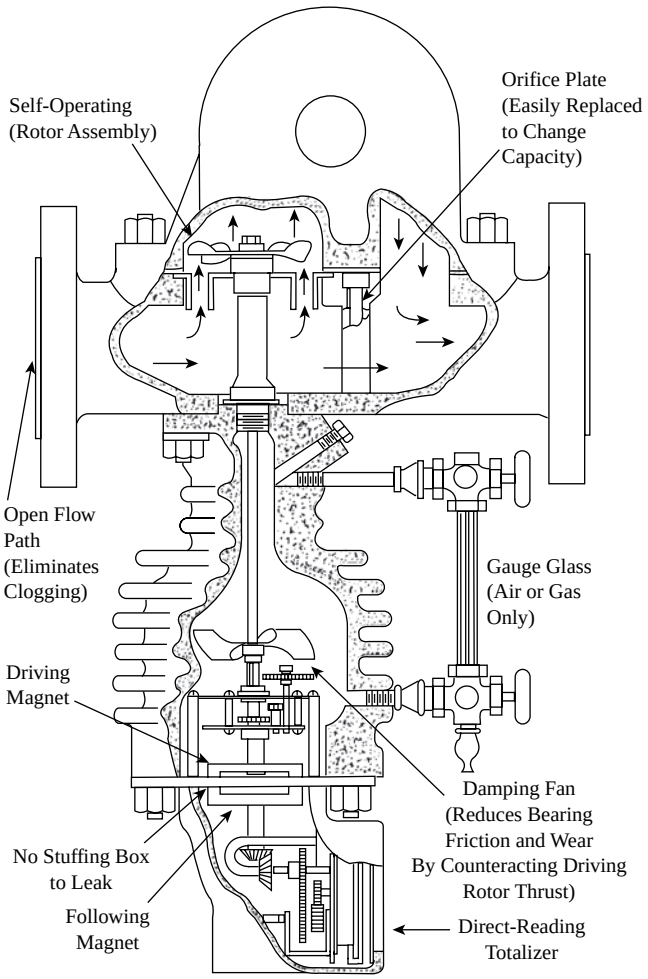

FIG. 2.15s
Shunt flowmeter.

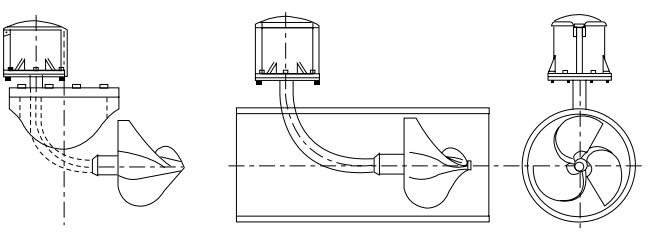

FIG. 2.25t
Impeller flowmeters are available in the paddle or the flow-through design. (Courtesy of McCrometer.)

turbine meter is a set of small turbine meter internals mounted on a probe in a large diameter pipe (see Figure 2.25u). The meter operating principles are the same as described previously except that the meter measures the fluid velocity only at a single point on the cross-sectional area of the pipe and does not "see" all the fluid. Total volumetric flow rate for the pipeline can then be inferred if certain assumptions are made about the velocity at measurement point. The velocity distribution

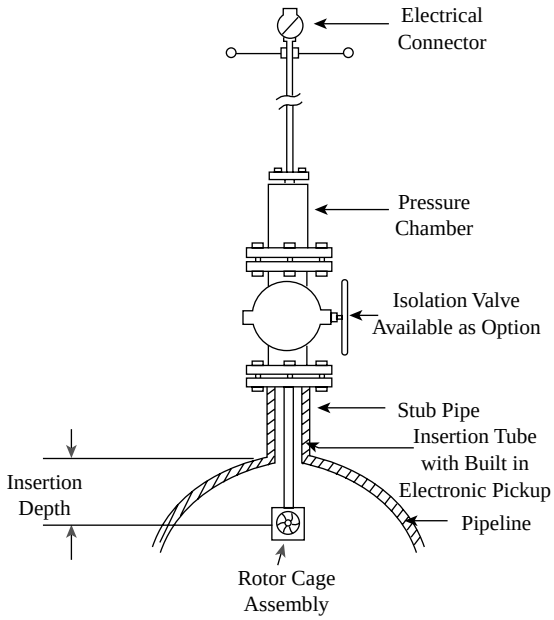

FIG. 2.25u
Insertion turbine flowmeter installed in large-diameter pipe.

can either be established by "profiling" the line (that is, taking a series of measurements across the pipeline and establishing the fluid velocity profile) or by establishing the optimal compromise insertion depth for a range of pipe diameters.

The insertion meter cannot be as accurate as a full-bore meter, since it is measuring velocity only at one point on the cross-sectional area. It does, however, provide a very low-cost metering system for large-diameter gas or liquid pipelines where accuracy is not important.

Insertion meters can be hot-tapped into existing pipelines through a valving system without shutting down the pipeline. A flanged riser, complete with valve, is welded to the pipeline. A hot-tap device is coupled to the valve, the valve is opened, and the pipe is penetrated. The hot-tap unit is withdrawn, and the valve is closed. The insertion meter is then installed, the valve is opened, and the meter is screwed in to the appropriate depth.

Insertion meters can be used on pipelines above 4 in. (102 mm) and, due to the small cross-sectional area relative to the pipe area, their pressure loss is very low. Typical linearity and repeatability figures are ±1% and ±0.25%, respectively. These are point velocity readings; in overall volumetric accuracy terms, the effects of changes in velocity profile must also be considered.

Optical Flow Sensors

A specialized version of the insertion-type turbine flowmeter is the optical photoflow sensor. The flow transducer consists of a probe supporting a low-mass rotating element that interrupts a light ray traveling from a light source to a photo transistor. The result is a pulse train that is converted into a volumetric flow representation.

© 2003 by Béla Lipták

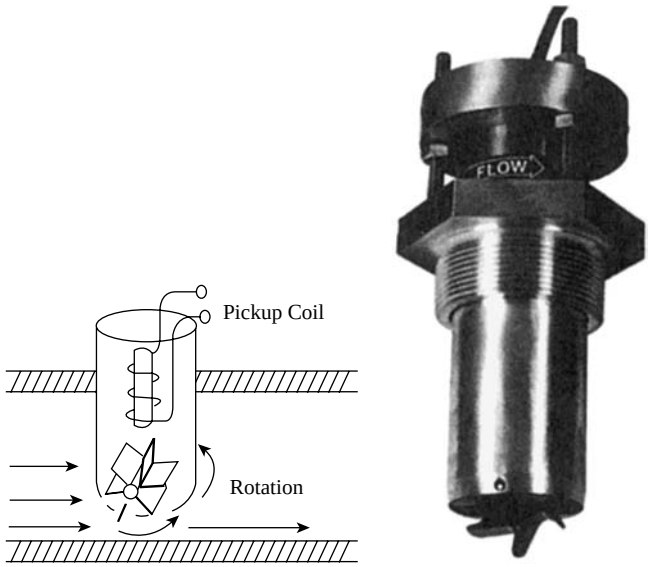

FIG. 2.25v
Paddlewheel flowmeter. (Courtesy of Data Industrial Corp.)

This flow transducer provides flow ranges as high as 100:1, bidirectional measurement without additional calibration, and extremely low pressure drop. The transmitter has only one moving part, the flow-sensing element. The bearing for the element is not located directly in the flow stream, enabling the transducer to handle severe flow conditions such as heavy surging and pulsating flows.

The installation requirements include the need for ten or more diameters of upstream straight run and the need to eliminate rotary valves (such as butterflies) at the ends of the measuring run.

Paddlewheel Flowmeters

One of the least expensive ways of measuring liquid flow in larger pipes (up to 12 in. or 305 mm) is to use one of the paddlewheel-type probes illustrated in Figure 2.25v. The rotation of the paddlewheel can be directed magnetically or optically, and the different manufacturers offer these probe units in both plastic and metallic materials. Accuracies, pressure ratings, and temperature ratings are low, but rangeability is reasonable, as these units are responsive to velocities as low as 1 ft/s (0.3 m/s) and can handle just about any maximum velocity. The fixed-insertion-length designs tend to be less accurate than the adjustable ones, as they cannot be moved as velocity profiles change. Some manufacturers claim these units to be usable on slurry service, but this is likely to require frequent cleaning.

Bibliography

American Petroleum Institute, Measurement of Liquid Hydrocarbons by Turbine Meter Systems, A.P.I. Standard 2534.

Baker, R. C., Turbine and related flowmeters, *J. Flow Meas. Instrum.*, 2, 147–161, 1991.

Furness, R. A., Twin Rotor Turbine Meter Experience, Short Course on Turbine and Vortex Flowmeters, Fluid Engineering Unit, Cranfield Institute of Technology, Cranfield, UK, 1983.

Furness, R. A., Modern Pipeline Monitoring Techniques, Part I, Real Time Computer Models, Department of Fluid Engineering & Instrumentation, Cranfield Institute of Technology, Cranfield, UK, January 1985.

Furness, R. A., Modern Pipeline Monitoring Techniques, Part II, Real Time Computer Models, Department of Fluid Engineering & Instrumentation, Cranfield Institute of Technology, Cranfield, UK, May l985.

Furness, R. A., Developments in pipeline instrumentation, in *Pipe Line Rules of Thumb Handbook*, 4th ed., E. W. McAllister, Ed., Gulf Publishing, Houston, TX, 1998.

Hall, J., Flow monitoring applications guide, *Instrum. Control Syst.*, 41, February 1983.

Instrument Society of America, Specification, Installation and Calibration of Turbine Flowmeters, Instrument Society of America Recommended Practice, RP31.1, ANSI/ISA-1977.

Liu, F. F. and Liu, A. E., Trans-regime viscosity effects on wide range turbine flowmeter: comparative numerical and conceptual analysis, in *Proc. Second Int. Conf. on Flow Measurement*, London, 1988.

Liu, A. E., The Twin Turbine Flow Sensor: Design Characteristics and Application to High Precision Natural Gas and Petrochemical Flow Metrology, CGA Gas Measurement School, Banff, Canada, 1994.

May, D. L., Accurate flow measurements with turbine meters, *Chem. Eng.*, March 8, 1971.

Murphy, H. N., Flow measurement by insertion turbine meters, Measurement Technology for the ’80s, ISA Symposium, Delaware, 1979.

Nichol, A. J., An Investigation into the Factors Affecting the Performance of Turbine Meters, Conference on Fluid Flow Measurement in the Mid-1970s, East Kilbride, UK.

Royek, S., Flowmeters help Tucson conserve water, *Water and Wastewater*, 2(5), 1988.

Turbine flowmeters, *Meas. Control*, February 1994.

Welch, J. V., Trends in low gas flow metering, *InTech*, February 1991.

Withers, V. R., Inkley, F. A., and Chesters, D. A., Flow characteristics of turbine flowmeters, Conference on Modern Developments in Flow Measurement, Harwell, UK.

© 2003 by Béla Lipták

2.26 Ultrasonic Flowmeters

R. SIEV (1969) **L. D. DINAPOLI** (1982, reviewed 1995)
B. G. LIPTÁK (1995) **J. YODER** (2003)

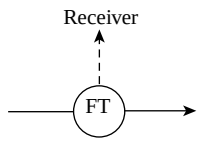

Flow Sheet Symbol

Types	A. Transmission (contrapropagating transit time) B. Reflection (Doppler frequency shift or multipulse time shift) C. Open-channel (Note: A and B can be either "wetted" or "clamp-on." Type A is more often wetted, type B is more often clamp-on. Clamp-on designs cannot be used as easily on concrete or lined metal pipe as on ordinary metal pipe. Type C is usually noncontacting.)
Applications	A. Clean liquids with little or no solids or bubbles; gases B. Slurries with solids (0.2 to 60% concentration, depending on particle size), liquids that are aerated or contain bubbles, gases with sound-reflecting particles, single-phase turbulent clean liquid C. Open-channel flow measurement based on upstream level in front of flumes or weirs
Flow Velocity Range	A. Normal is 1 to 50 ft/s (0.3 to 15 m/s); maximum reported is 0.1 to 100 ft/s (0.03 to 30 m/s). B. Minimum velocity for solids to stay in suspension is about 2.5 ft/s (0.75 m/s); bubbles require 6 ft/s (1.8 m/s). Otherwise, 0.2 to 60 ft/s (0.06 to 18 m/s) would be usable. C. Limits are unavailable in the literature.
Process Temperature	A and B. –300 to 500°F (–184 to 260°C); higher or lower with special sound-transmitting wedges
Design Pressure	A. Up to 3000 PSIG (207 bars) for wetted; unlimited for clamp-on B. Unlimited for clamp-on C. Usually atmospheric
Materials of Construction	A. Spools or transducer probes: steel, stainless steel, or alloys B. Usually clamp-on C. Noncontacting
Sizes	A. 0.125 to 120 in. (3 mm to 3 m) diameter B. 0.5 to 72 in. (13 mm to 1.8 m) diameter C. Not applicable
Straight Pipe Required	A and B. 10 to 20 diameters upstream, 5 downstream; very disturbed profiles require even longer straight runs or flow straighteners C. See requirements for weirs of flumes
Inaccuracy	A. From 1% of actual flow to 2% of full scale. Error can be reduced by careful determination of pipe ID and by increasing number of paths B and C. 2 to 5% of full scale
Costs	A. Spool designs in steel, not including options or special features and of the single-path design: $5000 for 4 in. (100 mm), $8000 for 10 in. (250 mm), $14,000 for 24 in.

© 2003 by Béla Lipták

(600 mm). Clamp-on design: $3000 regardless of size, and $1000 per acoustic coupling with thermal expansion chamber.
B. Clamp-on design, not including options or special features, is about $3000, independent of pipe size; acoustic coupling is additional.
C. $2200

*Partial List of Suppliers**

ADS Environmental Service (A)
Caldon Inc. (A)
Controlotron Corp. (www.controlotron.com) (A†, B†)
Danfoss A/S (www.danfoss.com)
Dynasonics Inc. (A, B†)
Endress+Hauser Inc. (www.us.endress.com) (A, C)
FMC Energy Systems (www.fmctechnologies.com) (A)
Fuji Electric (www.fujielectric.com)
GE Panametrics Inc. (www.panametrics.com) (A†, B†)
Greyline Instruments Inc. (www.greyline.com) (B)
Inventron Inc. (C)
Isco Inc. (www.isco.com) (C)
Krohne Inc. (www.krohne.com) (A†)
Mesa Laboratories (A, B)
Quality Control Equipment Co. (C)
Sick Inc. (www.sickoptic.com)
Siemens-Milltronics Inc. (www.sea.siemens.com) (C)
Sparling Instruments Inc. (www.sparlinginstruments.com) (A, C)
Thermo Polysonics (www.thermopolysonics.com) (A, B)
Tokyo Keiki
Yaskawa (www.yaskawa.com)

Ultrasonic flowmeters were first introduced in Japan, in 1963, by Tokyo Keiki (now Tokyo). In 1972, Controlotron became the first U.S. manufacturer to introduce them in the United States. During the 1970s and early 1980s, the process control industry had high expectations for these devices. It was anticipated that they could be used for all types of process fluids (transit-time designs for clean fluids and Doppler reflection types for dirty, slurry-type streams); they could be installed without requiring a process shutdown (clamp-on types); their prices would be unaffected by pipe size and therefore would be economical for larger pipes; and they would not generate any pressure drop and would provide wide rangeability in both directions. These expectations generally did not come true until very recently.

The image of ultrasonic flowmeters was rather tarnished for decades because the complexity of the measurement produced was not initially realized. Factors that affect the measurement include the influence of the pipe, the flow profile, and the many practical obstacles and environment interferences that can occur. For the clamp-on designs, it turned out to be difficult to maintain a good acoustic coupling that would not fail from thermal expansion or drying out of the couplant (at higher temperatures for prolonged periods) and would not short-circuit by "ringing around the pipe." These problems have now been solved, or at least well defined.

For wetted designs, failure contributions included the effect of changes in velocity profiles (Figure 2.26a), the effect of variations in the refractive index, upstream piping configurations,

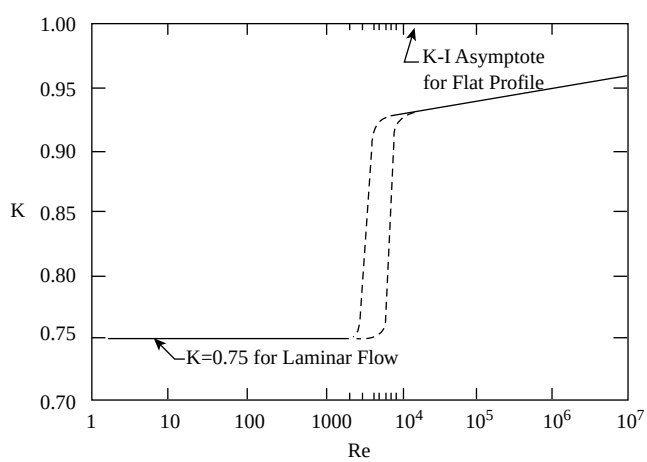

FIG. 2.26a
The ultrasonic flowmeters operate by averaging the velocity profile. This profile is flat at high Reynolds numbers and elongated at low Reynolds numbers. Consequently, the meter factor (K) also varies with Re, and it is rather unpredictable in the transition zone between laminar and turbulent regions.[1]

* Note: Most popular are units from GE Panametrics, Daniel-Emerson, Siemens-Milltronics, Controlotron, Endress+Hauser, Krohne, Thermo Polysonics, and ADS Environmental Service.
† Clamp-on design available.

© 2003 by Béla Lipták

making the acoustic path long enough in smaller sizes, overcoming the effects of turbulence, ambient conditions, and fluid property changes, including the change in the velocity of sound with temperature. These problems also have been solved or at least better identified.

TRANSIT-TIME FLOWMETERS

As the name implies, these devices measure flow by measuring the time taken for an ultrasonic energy pulse to traverse a pipe section, both with and against the flow of the liquid within the pipe. Figure 2.26b is a diagram of a representative transit-time flowmeter.

The time (t_{AB}) for the ultrasonic energy to go from transducer A to transducer B is given by the expression

$$t_{AB} = L/(C + V \cdot \cos\theta) \qquad \textbf{2.26(1)}$$

The time (t_{BA}) to go from B to A is given by

$$t_{BA} = L/(C - V \cdot \cos\theta) \qquad \textbf{2.26(2)}$$

where

C = speed of sound in the fluid
L = acoustic path length in the fluid
θ = angle of the path with respect to the pipe axis

By combining terms and simplifying it can be shown that, for $V << C$,

$$\Delta t = t_{BA} - t_{AB} = 2 \cdot L \cdot V \cdot \cos\theta / C \qquad \textbf{2.26(3)}$$

It can also be shown that:

$$V = L \cdot \Delta t/2 \cdot \cos\theta \cdot t_A^2 = K \cdot \Delta t/t_A^2 \qquad \textbf{2.26(4)}$$

where t_A is the average transit time between the transducers.

Since the cross-sectional area of the pipe section or *spoolpiece* is known, the product of area and velocity will yield volumetric flow rate.

Frequency-Difference Type

In sing-around flowmeters, the reciprocals of transit times are used. This leads to a frequency difference (Δf) that is proportional to the flow velocity V or to the mach number V/C. The difference in frequencies is related to the velocity as follows:

$$V = \Delta f \cdot L/2 \cdot \cos\theta \qquad \textbf{2.26(5)}$$

The multipulse time-shift reflection method uses one or more pulses and times them to determine the change in range per second to an ensemble of scatterers. The change in range per unit time yields the velocity of scatterers.

Flowmeter Construction

The flowmeter usually consists of an electronics housing, transducers, and a pipe section. Several options are available as to the construction of the transducers and pipe section. Some designs allow removal of the transducers without interrupting process flow. A spoolpiece with integral transducers is one of the most common types of construction and is shown in Figure 2.26b. The manufacturer mounts the transducers to a flanged pipe section (spoolpiece). Usually, the manufacturer calibrates the unit to meet the customer's specifications. The spoolpiece thus becomes an integral part of the hydraulic system, so it is not easily retrofitted into an existing system.

Clamp-on transducers can be mounted outside an existing pipe, as shown in Figure 2.26c. The manufacturer can calibrate this type of system only if the customer provides detailed information on pipe diameter, pipe wall thickness, process fluid, percent of solids concentration, process temperature, variations in process temperature, and so forth. This type of flowmeter is easily retrofitted onto an existing system, given that no pipe section need be installed.

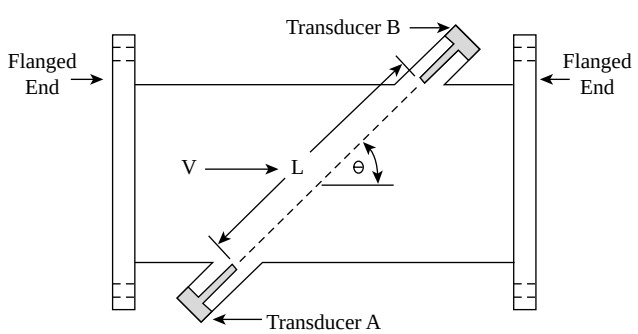

FIG. 2.26b
Transit-time flowmeter.

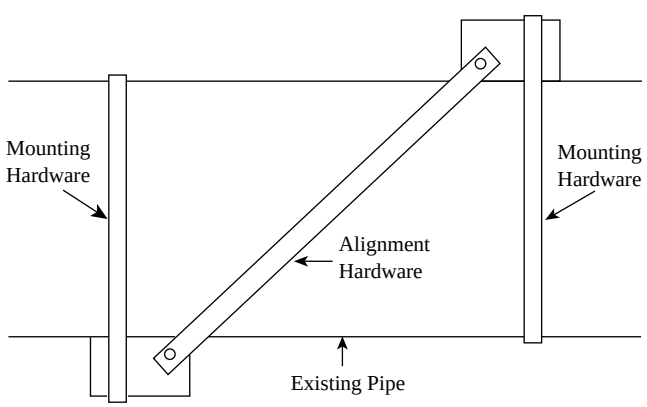

FIG. 2.26c
External transducers.

© 2003 by Béla Lipták

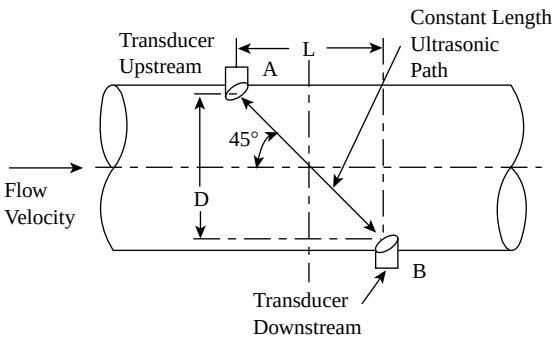

FIG. 2.26d

Wetted transducers communicate over a path that is fixed and independent of fluid speed, unless sound speed is nonuniform. (Courtesy of Panametrics Inc.)

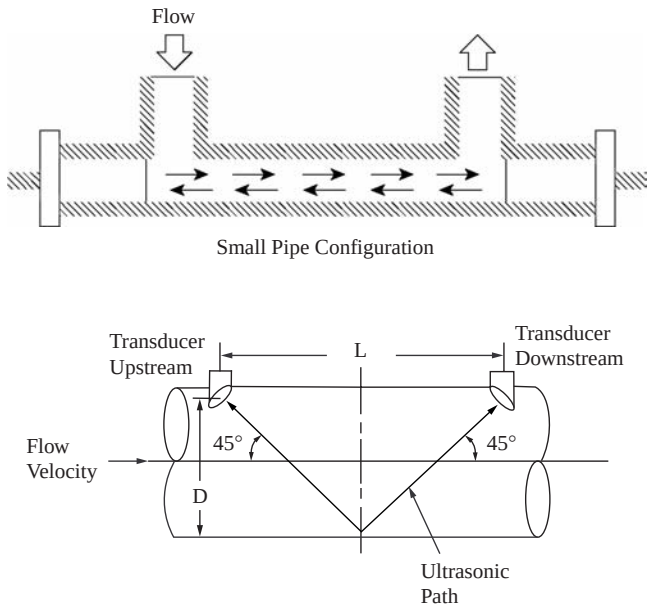

FIG. 2.26e

In smaller pipelines the time difference can be amplified by locating the transducers at the ends of a straight pipe section or by "bouncing" the ultrasonic pulse (one or more times) as shown on the right. (Courtesy of GE Panametrics Inc.)

Some manufacturers provide wetted transducers and mounting hardware that the user installs into an existing pipe. The user drills holes into the existing pipe and attaches the transducer mounting hardware by welding or other suitable means. The transducers are then mounted and aligned. Usually, the user may calibrate this type of unit after measurements of transducer angle and spacing and pipe diameter are made.

In case of "wetted" transducers, it is important to keep the distance that the ultrasonic pulse travels constant. The best way to achieve this is to keep the transmitting and reflecting surfaces perpendicular to each other (Figure 2.26d). This eliminates the effect of changes in the angle of refraction that can result from changes in process temperature or composition. Particularly in smaller pipes, the travel distance of the ultrasonic pulse might not be sufficient to produce accurate flow signals. Figure 2.26e shows how such distances can be increased.

In the early clamp-on designs, one of the difficulties was establishing an acoustically efficient sound-conductive path between the transducer and the process fluid inside the pipe. In the case of clamp-on designs, the transmitting and reflecting surfaces are the inside surfaces of the pipe. Potential errors caused by "ringing around the pipe" (pulse blockage by a molecular layer of air between the pipe and its lining, or variations in travel distance due to changes in the angle of refraction) are more difficult to solve with clamp-on units than with wetted ones. The acoustic coupling between the transducer and the pipe can be improved (Figure 2.26f) by eliminating the possibility of dry-out and by allowing for thermal expansion and contraction. Unfortunately, such couplings are relatively expensive and require periodic refilling of the fluid.

Application and Performance

As with most flowmeters, the spoolpiece or pipe section must always be full to ensure proper operation and volumetric flow indication. Most manufacturers will specify the minimum distance from valves, tees, elbows, pumps, and so on that will ensure accurate flowmeter performance. Typically, 10 to 20 diameters upstream and 5 diameters downstream are required. The flowmeter relies on an ultrasonic signal traversing across the pipe; therefore, the liquid must be relatively free of solids and air bubbles. Bubbles in the flowstream generally cause more attenuation of the acoustic signals than do solids and therefore can be tolerated less. The flowmeter can tolerate a larger percentage of solids than bubbles.

Depending on the process fluid, proper transducer materials and protection must be chosen to prevent transducer damage due to chemical action. Process temperature limitations must also be considered for proper flowmeter application.

Accuracy is usually specified as a percent of rate. Typically, for a single-path flowmeter, it is approximately 1 to 2% of rate, depending on design, velocity, pipe size, and process. This accuracy can be expected only with calibrated flowmeters and only within the range of their calibration. Repeatability is usually specified as a percent of rate, typically about 0.5%, depending on velocity range and calibration.

To improve performance and accuracy for larger pipe sizes, some suppliers offer flowmeters with two, four, or more pairs of transducers arranged to interrogate multiple acoustic paths. The cost of such units is higher than that of a single-path flowmeter. The inaccuracy of multipath flowmeters can reach or exceed 0.5% of actual reading within a narrower range if the flow velocity exceeds 1 ft/s (0.3 m/s). Multipath flowmeters are widely used for custody transfer of natural gas. The ultrasonic market for measuring natural gas flow is the fastest-growing segment of the flowmeter market.

© 2003 by Béla Lipták

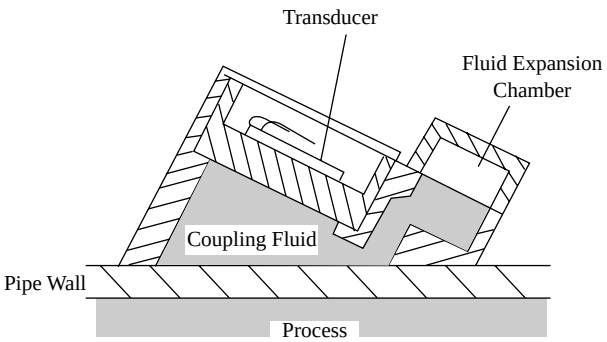

FIG. 2.26f
Liquid-filled ultrasonic coupling assembly.

DOPPLER FLOWMETERS

In 1842, Christian Doppler discovered that the wavelength of sound received by a stationary observer from a source that is moving toward the observer appears to be shorter, and the wavelength received when the source is moving away from the observer appears to be longer. The transmitter of a Doppler flowmeter projects an ultrasonic beam at a frequency of about 0.5 MHz into the flowing stream and detects the reflected frequency, which is shifted in proportion to stream velocity. The difference between transmitted and reflected velocities is called the "beat frequency," and its value relates to the velocity of the reflecting surfaces (solid particles and gas bubbles) in the process stream.

As shown in Figure 2.26g, an ultrasonic wave is projected at an angle through the pipe wall into the liquid by a transmitting crystal in a transducer mounted outside the pipe. Part of the energy is reflected by bubbles or particles in the liquid and is returned through the pipe wall to a receiving crystal. If the reflectors are traveling at the fluid velocity, the frequency of the reflected wave is shifted according to the Doppler principle in proportion to the flow velocity.

Combining Snell's law and the classical Doppler equation, the flow velocity can be determined as follows if $V << C$:

$$V = \Delta f \cdot C_t/(2 \cdot f_o \cdot \cos\theta) = \Delta f \cdot K \qquad \textbf{2.26(6)}$$

Where Δf is the difference between transmitted and received frequency, f_o is the frequency of transmission, θ is the angle of the transmitter and receiver crystal with respect to the pipe axis, and C_t is the velocity of sound in the transducer. As shown in Equation 2.26(6), velocity is a linear function of Δf. Since the inside diameter of the pipe is known, volumetric flow rate can be measured using Equation 2.26(7).

$$\text{GPM} = 2.45 \cdot V \cdot (ID)^2 \qquad \textbf{2.26(7)}$$

The single-transducer design is a popular one. Both the transmitter and received crystal are contained in a single transducer assembly that mounts on the outside of the pipe. The manufacturer thus controls alignment of the crystals. This approach is shown in Figure 2.26g.

In one form of the dual-transducer design, the transmitter crystal and the receiver crystal are mounted separately, on opposite sides of the outside of the pipe. Alignment is maintained by a mounting assembly that maintains the relative positions of the transducer as shown in Figure 2.26h.

When the process stream contains large amounts of solids (is sonically highly attenuative)—and bearing in mind that the velocity of the solid particles near the wall is likely to be less than the average, and recognizing that particles near the wall would dominate the readings in a single-transducer installation (causing large errors)—it is recommended that the two-transducer approach (supplemented by range gating) be used. With this approach, the reflected ultrasonic radiation is received from a more representative portion or portions of the flow stream.

Each manufacturer provides instructions on how to mount the transducer or transducers to the pipe. The acoustic

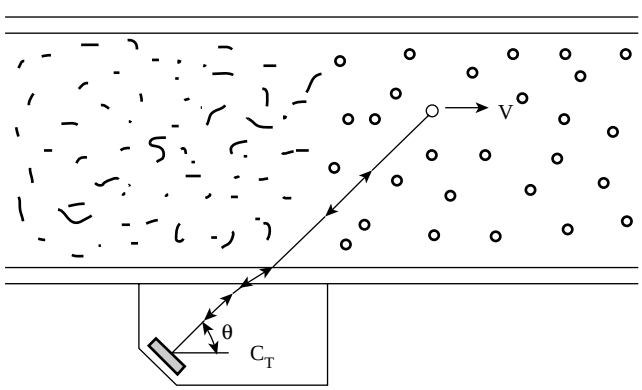

FIG. 2.26g
Doppler flowmeter principle of operation.

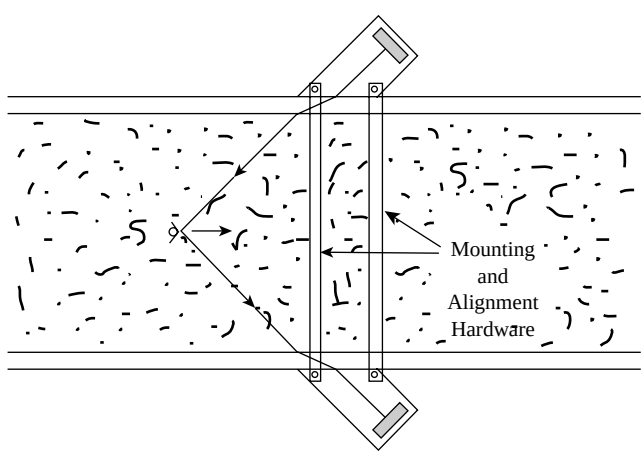

FIG. 2.26h
Two-transducer approach.

© 2003 by Béla Lipták

coupling to the pipe and the relative alignment of the transducers must be maintained in spite of pipe temperature changes and vibration so as to obtain acceptable performance.

Application and Performance

As with transit-time flowmeters, to properly indicate volumetric flow, the pipe must always be full. A Doppler unit will, however, indicate velocity in a partially full pipe as long as the transducer is mounted below the liquid level in the pipe.

The minimum straight pipe distance required from valves, elbow, tees, pumps, and so on is typically 10 to 20 diameters upstream and 5 diameters downstream for relatively clean fluids. This requirement can increase with process solids concentration or solids composition.

A Doppler flowmeter relies on reflectors in the flow stream to reflect the ultrasonic energy. There is a lower limit for the concentration and size of solids or bubbles in the liquid that will give reliable, accurate operation. The flow also must be fast enough to keep the solids or bubbles in suspension, typically at 6 ft/s (1.8 m/s) minimum for solids and 2.5 ft/s (0.75 m/s) for small bubbles, according to one manufacturer.

In the past few years, some manufacturers have introduced flowmeters that operate at frequencies of 1 MHz or higher. The claim for these high-frequency units is that they will operate on virtually clean liquids, because reflections will occur off the swirls and eddys in the flow stream. While this might be so, a high-frequency unit generally will not be suitable if the concentration of bubbles or particles exceeds 0.05%, because the penetration depth of the higher-frequency energy is much lower. Thus, for proper operation, a high-frequency Doppler flowmeter is limited to low-concentration applications.

On horizontal pipes, the best place to locate the transducer around the circumference should be determined on the basis of empirical testing and application experience.

The Doppler flowmeters will operate independent of pipe material if the pipe is sonically conductive. Such pipes as concrete, clay, and very porous cast iron absorb the ultrasonic energy and are not suited for Doppler-typed flowmetering. Similarly, the lining in lined pipes is not bonded well enough to allow the use of this type of clamp-on flowmeter, because even just a molecular layer of air is enough to block the transmission of the ultrasonic radiation.

The maximum operating temperatures of some ultrasonic flow transducers is about 212°F (100°C). The inaccuracy or error of the Doppler-type flowmeter is about 3% of full scale or span. The error does vary with flow velocity, pipe size, and flowmeter calibration. The error will also increase as the open flow area in the pipe changes either due to material buildup on the inside of the pipe or because the inside diameter was incorrectly measured in the first place. Repeatability is usually about 1% of full scale or full span.

DISPLAYS, RECEIVERS, AND INTELLIGENT UNITS

The electronics can be mounted either integrally with the ultrasonic flowmeter or remotely connected by cable. Remote location can be the choice for high-temperature services, although thermally isolating waveguides (Figure 2.26i) are also available. Routinely available transmitters can provide 4- to 20-mA DC analog, voltage, pulse train, or digital outputs, while the displays can provide both analog and digital indication in addition to totalization and alarming functions.

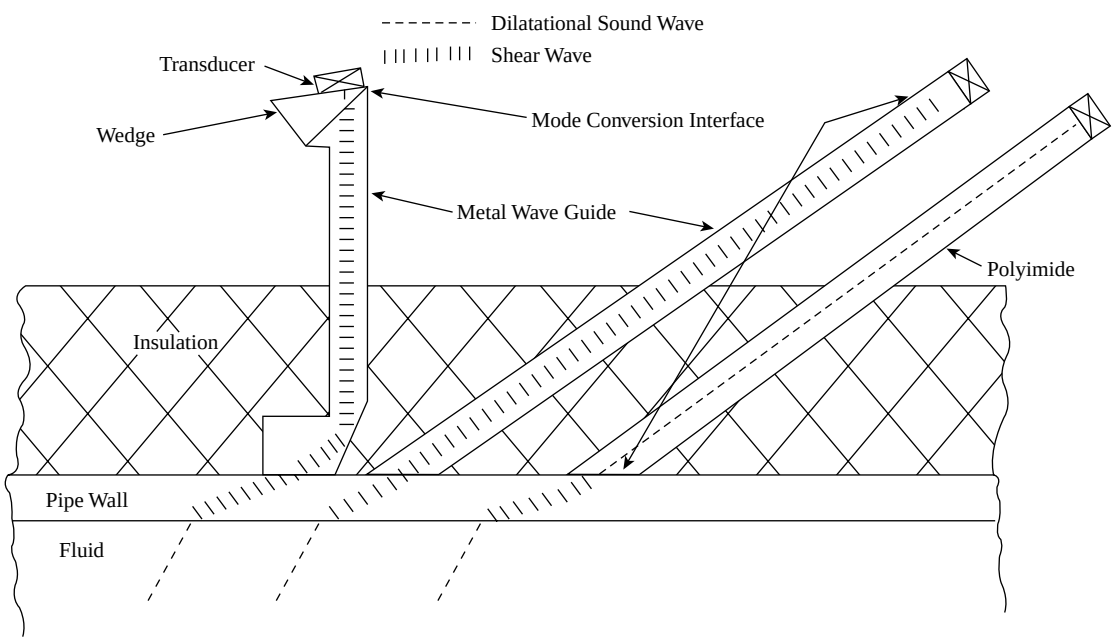

FIG. 2.26i
Three forms of thermally isolating waveguides.[2]

© 2003 by Béla Lipták

"Intelligent" flowmeters are capable of bidirectional flow measurement and of distinguishing true reflector movement from stationary particle or bubble vibration under no-flow conditions. One of the most promising tasks for smart ultrasonic flowmeters is to automatically evaluate the presence or absence of reflector particles or bubbles and to automatically switch from the transit-time to the Doppler reflection mode of operation and back. If and when this capability is fully developed, this "all-purpose" ultrasonic flowmeter (TransFlection®) will be able to measure the flow of both clean and dirty fluids. This capability, in combination with reduction in the unit costs, would make the ultrasonic flowmeter industry highly competitive.

ADVANTAGES OF ULTRASONIC FLOWMETERS

Ultrasonic flowmeters are members of the class of new-technology meters. Other members of this class are Coriolis, magnetic, vortex, and multivariable differential-pressure units. Ultrasonic flowmeters have some important advantages over other new-technology meters as well as over traditional-technology meters.

Ultrasonic meters have an advantage over Coriolis meters in that they do well in large-size pipes. Over 90% of Coriolis meters sold are for 2-in. pipes or smaller. Size is actually an advantage for ultrasonic meters, because there is more room for the ultrasonic beam to travel.

As compared to magnetic flowmeters, ultrasonic meters have the advantage that they can measure nonconductive fluids. Ultrasonic meters are widely used to measure liquids and gases, and they are beginning to be used for steam. Magnetic flowmeters, by contrast, are not used on gases or steams.

Ultrasonic meters measure fluids at a low flow rate better than do vortex meters. Vortex meters require a minimum Reynolds number and, therefore, a minimum velocity that might not be available at low flow rates. This is because, for a vortex meter to work effectively, the fluid has to be flowing fast enough to generate regular vortices.

As compared to traditional-technology meters such as differential-pressure (d/p) meters, ultrasonic flow detectors have the advantage of being less intrusive. The intrusiveness of d/p meters varies with the type of primary element. Clamp-on ultrasonic meters are completely nonintrusive, whereas spoolpiece meters are slightly intrusive. Insertion ultrasonic meters are somewhat more intrusive than the spool-piece variety.

Ultrasonic flowmeters have significant advantages over turbine and positive-displacement meters. They are far less intrusive than either. Unlike both of these traditional-technology meters, ultrasonic meters do not have moving parts that are subject to wear. A great deal of competition is evolving between ultrasonic and turbine meters in their use for custody transfer of natural gas.

TABLE 2.26j
Models and Types of Ultrasonic Flowmeters by Supplier

	Type			Operating Principle			Fluid		
Company	*SP*	*CL*	*IN*	*TT*	*D*	*H*	*G*	*L*	*S*
American Sigma		x			x			x	
Automated Sonix	x	x						x	
Caldon	x	x		x				x	
Controlotron	x	x		x	x		x	x	x
Danfoss	x			x				x	
Daniel	x			x			x		
Datam Flutec			x	x				x	
D-Flow				x				x	
Durag			x	x			x		
Dynasonics		x		x	x			x	
Eastech Badger	x	x		x				x	
EES		x		x				x	
Elis Plzen	x			x				x	
EMCO		x		x				x	
Endress+Hauser		x		x				x	
Flexim		x		x				x	
Flotek UK		x		x				x	
Fluenta			x	x			x		
FMC Smith Meter	x			x			x		
Fuji Electric		x		x	x			x	
GE Panametrics		x		x		x	x	x	x
Greyline		x			x			x	
Honda		x		x				x	
Instromet	x		x	x			x		
Kaijo	x	x		x			x	x	
Kamstrup	x			x				x	
Krohne	x	x		x			x	x	x
Laaser		x			x			x	
Matelco	x	x	x	x				x	
Mesa Laboratories	x	x		x	x			x	
Micronics		x		x				x	
Monitor Labs				x			x		
Oval Corp.	x			x			x		
Polysonics		x		x	x			x	
Quality Control		x			x			x	
Rittmeyer		x	x	x				x	
Sick			x	x			x		
Siemens	x			x				x	
Solartron Mobrey		x				x		x	
Sparling	x			x				x	
Teksco USA		x			x			x	

© 2003 by Béla Lipták

TABLE 2.26j Continued
Models and Types of Ultrasonic Flowmeters by Supplier

	Type			*Operating Principle*			*Fluid*		
Company	*SP*	*CL*	*IN*	*TT*	*D*	*H*	*G*	*L*	*S*
Thermo MeasureTech		x			x			x	
Tokimec		x		x	x		x	x	
Tokyo Keiso	x	x		x				x	
Ultraflux		x	x	x				x	
Ultrasound Res. Ctr.		x	x	x				x	
Yokogawa		x		x				x	

SP = spoolpiece
CL = clamp-on
IN = insertion
TT = transit time
D = Doppler
H = hybrid
G = gas
L = liquid
S = steam

RECENT DEVELOPMENTS

Several important developments have occurred in this field in the past ten years. One of the most remarkable is the increased use of ultrasonic flowmeters for custody transfer of natural gas. This began in 1995, in Europe, when Groupe Europeen de Recherches GaziSres (GERG) approved the use of multipath ultrasonic flowmeters for custody transfer of natural gas. The movement picked up steam in the United States, in 1998, when the American Gas Association (AGA) followed suit with its own approval, using independent criteria. Both approvals helped generate very rapid growth in the ultrasonic flowmeter market, and this growth continues today.

Instromet and Daniel dominate the ultrasonic flowmeter market for measuring natural gas, although FMC Energy Systems has also introduced a flowmeter for this application. Apart from the somewhat specialized area of natural gas, Panametrics and Controlotron are the top suppliers. However, Krohne is rapidly gaining ground. Thermo-Polysonics is the top supplier of Doppler flowmeters.

More than 50 ultrasonic flowmeters are available from suppliers worldwide. With so many suppliers in a fast-growth market (see Table 2.26j), consolidation seems very likely. One would expect that this consolidation will be led by the major process control equipment suppliers.

References

1. Lynnworth, L. C., Clamp-on ultrasonic flowmeters, *Instrum. Tech.*, September 1975.
2. Raptis A. C. et al., State of the Art of Acoustic Instrumentation for Coal Conversion Plants, Argonne National Laboratory, ANL/FE 49628-TM04, October 1981.

Bibliography

Addie, G. R., Maffett, J. R., DiNapoli, L. D. and Punis, G., Doppler Flow Meter Tests at Georgia Iron Works, ISA Mining and Metallurgy Industries Division Symposium, Phoenix, AZ, 1980.

Bersaas, S. L., Experience with Ultrasonic Flare Gas Metering Onshore at Kårsto Terminal, Metering Seminar No. 7, K-Lab (Kårsto Metering and Technology Laboratory, a joint venture between Den norsek stats oljeselskap a.s. (Operator) and TOTAL Marine Norsk a.s.), January 25, 1989.

Brown, A. E. and Lynnworth, L. C., Ultrasonic Flowmeters, Ch. 20, *Flow Measurement—Practical Guides for Measurement Control*, 2nd ed., D.W. Spitzer, Ed., ISA, Research Triangle Park, NC, 2001, 515–573.

Engineer's/User's Guidebook to Doppler Flow in Liquids, 2nd ed., Polysonics, Inc., 1989.

Faddick, R., Pouska, G., Connery, J., DiNapoli, L. and Punis, G., Ultrasonic Velocity Meter, Sixth International Conference on the Hydraulic Transport of Solids in Pipes, BRHA Fluid Engineering, Cranfield, UK, September 1979.

Fish, P. J. and Cope, J. A., Effect of frequency-dependent processes on pulsed doppler, *Ultrasonics*, July 1991.

Grimley, T. A., The Influence of Velocity Profile on Ultrasonic Flowmeter Performance, A.G.A. Operations Conference, Seattle, WA, May 17–19, 1998.

Lipták, B. G., Ultrasonic instruments, *Instrum. Tech.*, September 1974.

Lynnworth, L. C., Selected Alternatives to Conventional Ultrasonic Flowmeter, Ultrasonics International Conference of 1977, Guildford, England.

Lynnworth, L. C., Ultrasonic flowmeters, *Trans. Inst. M.C.*, 3(4), 1981.

Lynnworth, L. C., *Ultrasonic Measurements for Process Control*, Academic Press, New York, 1989.

Lynnworth, L. C. and Magori, V., Industrial process control sensors and systems, Ch. 4 in *Ultrasonic Instruments and Devices: Reference for Modern Instrumentation, Techniques, and Technology*, E. P. Papadakis, guest Ed., Vol. 23, in the series Physical Acoustics, Academic Press, New York, 275–470, 1999.

Miller, R. W., *Flow Measurement Engineering Handbook*, 2nd ed., McGraw-Hill, New York, 1989.

Munk, W. D., Ultrasonic flowmeter offers new approach to large-volume gas measurement, *Oil & Gas J.*, September 6, 1982.

Mylvaganam, K. S., Ultrasonic flowmeters measure fare gas in the North Sea, *Oil & Gas J.*, October 17, 1988.

Mylvaganam, K. S., High rangeability ultrasonic gas flowmeter for monitoring flare gas, *IEEE Trans. UFFC*, 36(2), 1989.

Mylvaganam, K. S., Ultraschall—Durchflussmessung strömender Gase unter niedrigem Druck für einen breiten Messbereich, *Technisches Messen*, Heft 3, 1989.

Mylvaganam, K. S., Folkestad, T. and Bo, R., Fluenta FGM 100 Ultrasonic Gas Flowmeter, Internal Report of Chr. Michelsens Institut, CMI-No. 871413–1, Bergen, Norway, 1987.

Oehmke, R. L. T., Flow measurement techniques, *Meas. Control*, September 1991.

Povey, J. J. W., *Ultrasonic Techniques for Fluids Characterization*, Academic Press, New York, 1997.

Raptis, A. C., Acoustic doppler flowmeter, *Fossil Energy I & C Briefs*, March 1980.

Rienzenman, M. J., Ultrasonic meters go with the flow, *Mech. Eng.*, 74–77, September 1989.

Rütten, O., Deutsches Patent no. 520484, 1928.

Sakariassen, R., Development of a New Gas Metering System—Ultrasonic Gas Flowmeters for Large Gas Flows, Gas Transport Symposium, January 30–31, Stavanger, Norway, 1989.

© 2003 by Béla Lipták

Schmidt, T. R., What you should know about clamp-on ultrasonic flowmeters, *InTech,* May 1981.

Scelzo, M. and Jacobson, S., Transit-time ultrasonic flowmeter with patented signal-coding, *Meas. & Control,* 164, 84–7, 1994.

Shane, J. L., Ultrasonic flowmeter basics, *Instrum. Tech.,* July 1971.

Siegbert, E., Bestimmung von Korrekturfaktoren für ein Ultraschalldurchflussmessverfahren in Rohrleitungen mit Störungen, Dissertation, Fakultät Energietechnik, Universität Stuttgart, 1982.

Smalling, J. W., Braswell, L. D., Lynnworth, L. C. and Wallace, D. R., Flare gas ultrasonic flow meter, in *Proc. Thirty-Ninth Annual Symposium on Instrumentation for the Process Industries,* 27–38, 1984.

Transit-Time Ultrasonic Flow Measurement in Liquids, Panametrics application literature.

Ullebust, B., Experience with Ultrasonic Flare Gas Metering Offshore on Gullfaks B, Metering Seminar No. 7, K-Lab (Kårsto Metering and Technology Laboratory, a joint venture between Den norsek stats oljeselskap a.s. (Operator) and TOTAL Marine Norsk a.s.), January 1989.

Ultrasonic Flare Gas Flowmeter FGM 100: Product Information of Fluenta A/S, Bergen-Nesttun, Norway, 1987.

Waller, J. M., Guidelines for applying doppler acoustic flowmeters, *InTech,* October 1980.

Yoder, J., Plumbing the depths of open channel flow measurement, *Control,* July 1999.

Yoder, J., Ultrasonic meters: a natural choice to measure gas flow, *Pipeline & Gas J.,* July 2000.

Yoder, J., Ultrasonics reverberate through flowmeter market, *InTech,* July 2000.

Yoder, J., Flowmeter shootout, part I: new-technology flowmeters, *Control,* February 2001.

Yoder, J., A complex flow instrumentation market, *InTech,* February 2002.

Yoder, J., New-technology flowmeters offer performance breakthroughs, *Control Solutions,* April 2002.

Yoder, J., Ultrasonic flowmeter market expected to grow strongly, *Pipeline & Gas J.,* April 2002.

Zacharias, E. M., Sound velocimeters monitor process streams, *Chem. Eng.,* January 22, 1973.

© 2003 by Béla Lipták

2.27 Variable-Area, Gap, and Vane Flowmeters

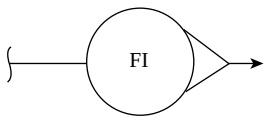

Flow Sheet Symbol

J. G. KOPP (1969,1982) **B. G. LIPTÁK** (1995) **T. J. BAAN** (2003)

Types	A. Rotameter (float in tapered tube) B. Orifice/rotameter combination C. Open-channel variable gate D. Spring-and-vane or piston
Standard Design Pressure	A. 350 PSIG (2.4 MPa) average maximum for glass metering tubes, depending on size Up to 720 PSIG (5 MPa) for metal tubes, special designs to 6000 PSIG (41 MPa)
Standard Design Temperature	A. Up to 400°F (204°C) for glass tubes and up to 1000°F (538°C) for some models of metal tube meters
End Connections	Female pipe thread or flanged
Fluids	Liquids, gases, and vapors
Flow Range	A. 0.01 cm^3/min to 4000 GPM (920 m^3/h) of liquid, 0.3 cm^3/min to 1300 SCFM (2210 m^3/h) of gas
Inaccuracy	A. Laboratory rotameters can be accurate to ±0.5% of actual flow; most industrial rotameters will perform within ±1 to ±2% of full scale over a 10:1 range, dual float rotameters can detect flow over a 20:1 range, and purge or bypass meters ±5 to ±10% of full range. B and D. ±2 to ±10% of full range C. ±7.5% of actual flow
Materials of Construction	A. Tube: Borosilicate glass, stainless steel, Hastelloy®, Monel®, Alloy 20®, PFA, Acrylic, Polysulfone, and polycarbonate. Float: *Conventional type*—brass, stainless steel, Hastelloy®, Monel®, Alloy 20®, nickel, titanium, or tantalum, and special plastic floats. Ball type—glass, stainless steel, tungsten carbide, sapphire, or tantalum. End Fittings: aluminum, brass, stainless steel, PTFE, or alloys for corrosive fluids. Packing: The generally available elastomers are used and O-rings of commercially available materials; Teflon® is also available.
Cost	A ¼-in. (6-mm) glass tube purge meter starts at $75. A ¼-in. stainless-steel meter is about $300. Transmitting rotameters in ½-in. (13-mm) size and with 2.5% error start at about $1200 whereas, with 0.5% of rate accuracy, their costs are over $2500. A 4-in. (100-mm) transmitting rotameter with ±2.5% FS error is $3000; a 3-in. (75-mm) standard bypass rotameter is about $750, and a 3-in. stainless-steel tube standard rotameter is about $2500. A 3-in. tapered-plug variable-area meter in aluminum construction is about $1200, and the same unit in spring-and-vane design is around $800.
Partial List of Suppliers	Aalborg Instruments & Controls Inc. (www.aalborg.com) (A) ABB Fischer & Porter (www.abb.com) (A) Analyt-MTC GmbH (www.analyt-mtc.de) (A) APPLIKON B.V. (www.applikon.com) (A) Blue-White Industries (www.bluwhite.com) (A)

© 2003 by Béla Lipták

Brooks Instrument Div. of Emerson (www.emersonprocess.com) (A)
Cole-Parmer Instrument (www.coleparmer.com) (A, D)
Dwyer Instruments Inc. (www.dwyer-inst.com) (A, D)
ERDCO Engineering Corp. (www.erdco.com) (D)
ESKO Industries Ltd. (www.eskoindustries.com) (A)
Extech Equipment Pty. Ltd. (www.extech.com.au) (A)
Flowmetrics Inc. (www.flowmetrics.com) (A)
Gilmont Instruments Div. of Barnant Co. (www.barnant.com) (B)
Hedland Inc. (www.hedland.com) (D)
ISCO Environmental (www.isco.com) (C)
Key Instruments (www.keyinstruments.com) (A)
King Instrument Co. (www.kinginstrumentco.com) (A)
Kobold Instruments Inc. (www.koboldusa.com) (A)
Krohne America Inc. (www.krohneamerica.com) (A)
Lake Monitors Inc. (www.lakemonitors.com) (A)
Matheson Tri-Gas (www.matheson-trigas.com) (A)
McCrometer (www.mccrometer.com) (A)
McMillan Company (www.mcmillancompany.com) (A)
Meter Equipment Mfg. Inc. (www.memflow.com) (D)
Metron Technology (www.metrontech.com) (A)
Omega Engineering Inc. (www.omega.com) (A)
Osmonics (www.osmonics.com) (B)
Platon Ltd. (www.platon.co.uk) (D)
Porter Instrument Co. (www.porterinstrument.com) (A)
Spirax Sarco Inc. (www.spiraxsarco.com) (D)
Turbo Instruments Inc. (www.turbo.de) (D)
Universal Flow Monitors Inc. (www.flowmeters.com) (D)
USFilter Wallace & Tiernan Inc. (www.usfwt.com) (A)
Webster Instruments (www.webster-inst.com) (D)

The variable-area flowmeter is also a head-type flow sensor, but it does not measure the pressure drop across a fixed orifice; instead, the pressure drop is held relatively constant, and the orifice area is varied to match the flow (Figure 2.27a). In gravity-type variable-area flowmeters, increasing flow lifts the float, piston, or vane, and it is the weight of these flow elements that has to be balanced by the kinetic energy of the flowing stream. These units can operate only in a vertical position. When the lifting of the float, piston, or vane is resisted by a spring instead of gravity, the meter can be installed in any position and can be configured as a pipeline spool piece. This advantage of piping convenience has to be weighed against the fact that a spring in the process stream can be a maintenance problem and may not yield as constant a force as does gravity.

All variable-area flowmeters can be provided with direct local indicators. In addition, most of them can also be furnished with pneumatic, electronic, digital, or fiber optic transmission or with microprocessors for intelligent and convenient operation. A few of the designs can also be used as self-controlled flowmeters or purge meters. In the discussion below, the different variable-area flowmeters will all be discussed, starting with the tapered tube (rotameter) designs.

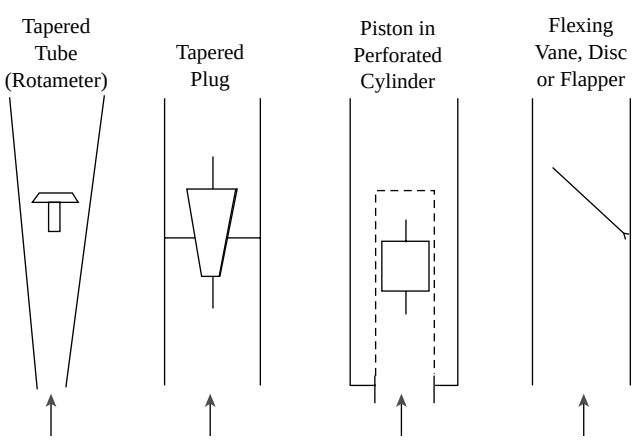

FIG. 2.27a
The area open to flow is changed by the flow itself in a variable-area flowmeter. Either gravity or spring action can be used to return the float or vane as flow drops.

ROTAMETERS

Rotameters are popular choices for low-flow measurement because of their low cost, simplicity, low pressure drop, relatively wide rangeability, and linear output. They are limited in that they can be installed only vertically, they can be used only on clean fluids, and, if glass tubes are used, they can present a safety hazard (and dirt buildup on the glass tube can limit visibility). Glass tubes are also limited in terms of their maximum pressure and temperature ratings. Their safe

© 2003 by Béla Lipták

working pressure drops as the tube diameter increases. For a ¼-in. (6-mm) diameter tube, it is 450 PSIG (3 MPa), whereas, for a 4-in. (100-mm) diameter tube, it is only 40 PSIG (275 kPa). Because the stainless-steel float expands more with temperature than does the glass tube, the operating temperature is limited to 200°F (93°C) for a ¼-in. (6-mm) diameter tube, and this limit drops to 120°F (49°C) for a 4-in. (100-mm) diameter tube. The flow capacity of glass tube rotameters is also limited. A ¼-in. (6-mm) diameter tube will pass 0.05 to 0.5 GPM (0.19 to 1.9 l/min) water or 0.18 to 1.8 SCFM (0.3 to 3 cmph) of air. For a 3-in. (75-mm) diameter unit, the maximum water flow range is 60 to 120 GMP (225 to 450 l/min), and the maximum airflow is 200 to 500 SCFM (350 to 900 cmph). (For a detailed discussion of purge rotameters, refer to Section 2.20.)

The rotameter is a variable-area-type flowmeter. It consists of a tapered metering tube and a float that is free to move up and down within the tube. The metering tube is mounted vertically with the small end at the bottom. The fluid to be measured enters at the bottom of the tube, passes upward around the float, and flows out at the top. Figure 2.27b is a representation of a rotameter.

When there is no flow through the rotameter, the float rests at the bottom of the metering tube where the maximum diameter of the float is approximately the same as the bore of the tube. When fluid enters the metering tube, the buoyant effect of the fluid lightens the float, but it has a greater density than the fluid, and the buoyant effect is not sufficient to raise it. There is a small annular opening between the float and the tube. The pressure drop across the float increases and raises the float to increase the area between the float and tube until the upward hydraulic forces acting on it are balanced by its weight minus the buoyant force. The metering float is "floating" in the fluid stream. The float moves up and down in the tube in proportion to the fluid flow rate and the annular area between the float and the tube. It reaches a stable position in the tube when the forces are in equilibrium. With upward movement of the float toward the larger end of the tapered tube, the annular opening between the tube and the float increases. As the area increases, the pressure differential across the float decreases. The float will assume a position, in dynamic equilibrium, when the pressure differential across the float plus the buoyancy effect balances the weight of the float. Any further increase in flow rate causes the float to rise higher in the tube; a decrease in flow causes the float to drop to a lower position. Every float position corresponds to one particular flow rate, and no other, for a fluid of a given density and viscosity. It is merely necessary to provide a reading or calibration scale on the tube, and flow rate can be determined by direct observation of the position of the float in the metering tube.

Frequently, glass metering tubes are installed in metallic frames with thick, clear front shields to protect the operator from accidental spillages or leaks. There are also acrylic, polycarbonate, polysulfone, or other plastic flowmeters for lower-cost applications.

Metal metering tubes are used where glass is not satisfactory. In this case, the float position must be indirectly determined by either magnetic or electrical techniques. The use of indirect float position sensors also provides functions other than direct visual indication. Rotameters are available that transmit pneumatic, electronic, or time-pulse signals or provide recording, totalizing, or control functions. For highly corrosive applications, PTFE flowmeters with translucent PFA metering tubes are available. These meters are designed with PTFE seals and O-rings excluding elastomeric materials. Figure 2.27c illustrates a typical PTFE-PFA flowmeter.

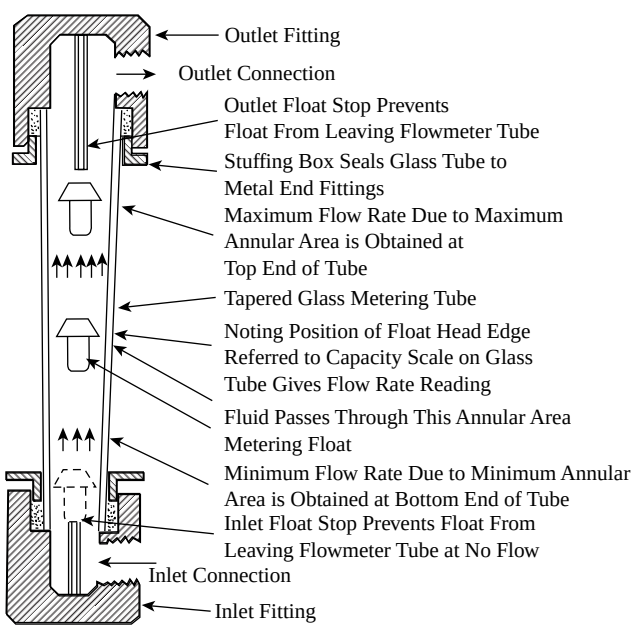

FIG. 2.27b
The rotameter.

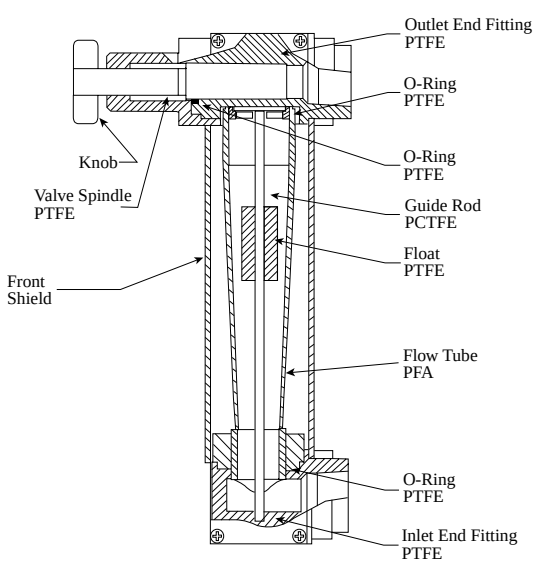

FIG. 2.27c
PTFE-PFA rotameter for highly corrosive fluids. (Courtesy of AALBORG Instruments.)

© 2003 by Béla Lipták

Sizing

To size a rotameter, it is customary to convert the actual flow to *standard flow.* For liquid flows, it is necessary to calculate the GPM (l/min or l/hr) water equivalent. For gases, it is necessary to determine the SCFM (l/min or l/hr) air equivalent. Capacity tables are based on these standard flows of GPM or cm^3/min of water and SCFM or cm^3/min of air at standard conditions. The tables also are based on using stainless-steel floats.

The equations necessary to calculate the water or air equivalent are provided below.

Liquids

Volume Rate

$$\text{GPM Water Equivalent} = \frac{(\text{GPM})(\rho)(2.65)}{\sqrt{(\rho_f - \rho)\rho}} \qquad \textbf{2.27(1)}$$

Weight Rate

$$\text{GPM Water Equivalent} = \frac{(\text{lbm/min})(0.318)}{\sqrt{(\rho_f - \rho)\rho}} \qquad \textbf{2.27(2)}$$

Base or Contract Volume Rate

$$\text{GPM Water Equivalent} = \frac{(\text{GPM}_b)(\rho_b)(2.65)}{\sqrt{(\rho_f - \rho)\rho}} \qquad \textbf{2.27(3)}$$

Gases or Vapors

Standard Volume Rate

$$\text{SCFM Air Equivalent} = \frac{(\text{SCFM})(\rho_{g\,std})(10.34)}{\sqrt{\rho_r(\rho_{g\,act})}} \qquad \textbf{2.27(4)}$$

Weight Rate

$$\text{SCFM Air Equivalent} = \frac{(\text{lbm/min})(10.34)}{\sqrt{\rho_r(\rho_{g\,act})}} \qquad \textbf{2.27(5)}$$

Operating or Actual Volume Rate

$$\text{SCFM Air Equivalent} = \frac{(\text{ACFM})(\rho_{g\,act})(10.34)}{\sqrt{\rho_r(\rho_{g\,act})}} \qquad \textbf{2.27(6)}$$

where

GPM = maximum flow of liquid at metering condition in units of gallons per minute

GPM_b = maximum flow of liquid at base or contract condition in units of gallons per minute

lbm/min = maximum flow of fluid at metering condition in units of pounds per minute

SCFM = maximum flow of gas referred to a base or standard condition in units of cubic feet per minute

ACFM = maximum flow of gas at operating conditions in units of cubic feet per minute

ρ = density of flowing liquid at metering conditions in units of grams per cubic centimeter

ρ_b = density of flowing liquid at base or contract conditions in units of grams per cubic centimeter

ρ_f = density of float in units of grams per cubic centimeter

$\rho_{g\,std}$ = density of gas at 14.7 PSIA and 70°F or 14.4 PSIA and 60°F in units of pounds per cubic foot

$\rho_{g\,act}$ = density of gas at metering conditions in units of pounds per cubic foot

To facilitate these computations, manufacturers offer slide rules or nomographs specifically designed for rotameter sizing.

Rotameter Characteristics

A very wide range of liquids can be handled by the rotameter. A wide choice of tube, float, end fitting, and packing or O-ring materials are available for the particular service being considered. Even liquid metals such as mercury and liquid lead can be metered. Because these metals are denser than the stainless-steel float, they are metered by an inverted rotameter. In this case, the flow is from top to bottom. When the meter is full of the liquid metal but there is no flow, the stainless-steel float is buoyed up by the heavier liquid and rests at the inlet, which is at the top. When there is flow, the flow forces the float down against the net buoyant force, and the float takes a position related to the flow rate.

The rotameter is an inexpensive flowmeter for gas flow measurement. The pressure drop across the meter is essentially constant over the full 10:1 operating range. Pressure drop is low, generally less than 1 PSI (6.89 kPa). Special designs are available for even lower pressure drops.

The position of the float in the metering tube varies in a linear relationship with flow rate. This is true over ranges up to 10:1. Percent of maximum, universal millimeter, and direct reading scales are used. Direct reading scales are convenient; however, they are valid only for the fluid for which they were designed and only at a unique set of pressure and temperature conditions. Universal millimeter scales are used in conjunction with separate calibration charts relating the elevations of the float to flow rates. The advantage of universal scales is the capability of a single flowmeter to be used for different fluids at various pressure and temperature conditions. Rotameters can directly measure flows as high as 4000 GPM (920 1/h). Even higher flow rates can be economically handled using

© 2003 by Béla Lipták

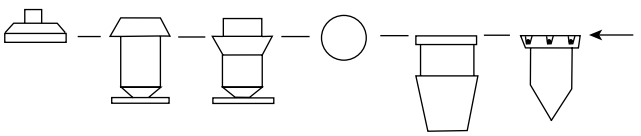

FIG. 2.27d
Variation in the shape of rotameter floats. The float on the right is provided with slots, which caused the early floats to rotate (for stabilizing and centering purposes); hence the name "rotameter."

the bypass-type rotameter. The capacity of the rotameter can be changed by changing the float. Various float configurations are available for higher capacities and generally permit a 2:1 change in capacity (Figure 2.27d). By using the same housing but changing both the metering tube and the float, a gross change in capacity is possible. These changes can be required by both a change in flow rate and a change in fluid density. For small flows in which spherical floats are employed, a downturn of better than 20:1 is achieved when two floats of different densities are installed in the same flow tube. The flow capacity of a rotameter is increased when floats have guide rods to permit the use of metering tubes with larger conical tapers.

The rotameter tends to be self-cleaning. The velocity of the flow past the float and the freedom of the float to move vertically enable the meter to clean itself of some buildup of foreign material. Liquids with fibrous materials are exceptions and should not be metered with rotameters. Generally, the size of particle, type of particle (whether fibrous or particulate), and the abrasiveness of the particle determine the suitability of the rotameter for a given service. Also, the percentage of solids by weight or by volume and the density of the solids influence the selection of the rotameter for this service.

Rotameters are relatively insensitive to viscosity variations. In the very small rotameters with ball floats, this is not the case, and the meters do respond to Reynolds number changes, which makes them sensitive to changes in both viscosity and density. However, the larger rotameters are less sensitive (Figure 2.27e). The viscosity immunity threshold can be as high as 100 cps (1 Pa · s). Meters can be operated above the viscosity limit; however, for these conditions, the meter is calibrated for discrete viscosity conditions that are to be encountered, and correction curves are furnished to adjust the indicated flow to the actual flow for the given viscosity.

The rotameter can also be used to approximate mass flow rate, given that the float responds to changes in fluid density. For a fixed volumetric flow rate, the float position in the metering tube will change with changing fluid density. The effect of fluid density changes on float position is a function of the relative densities of the float and the fluid. The closer the float density approaches the fluid density, the greater the effect of a given fluid density, and the greater the effect of a given fluid density change. It has been derived that, if the float

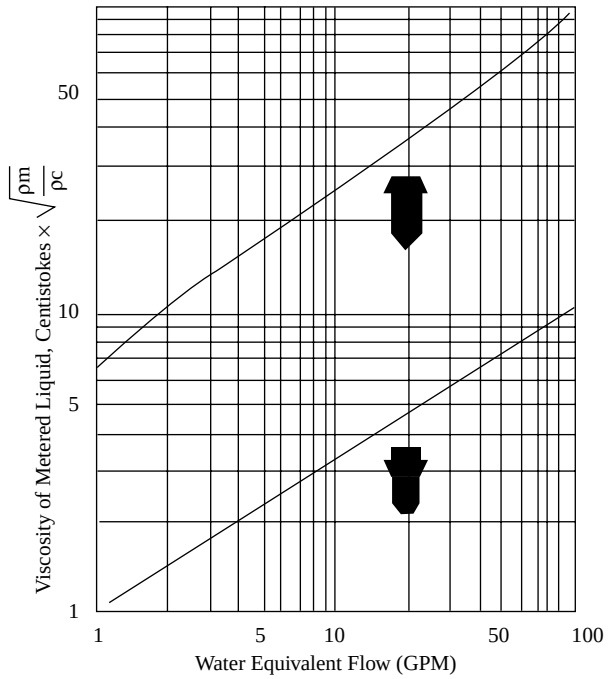

ρm = Density of Metered Liquid
ρc = Density of Calibrating Liquid (Water)

FIG. 2.27e
Viscosity limits of rotameters depend on float shape. (Courtesy of Brooks Instrument Div. of Rosemount.)

density is twice the fluid density, the compensation for fluid density change is exact, and the rotameter is a mass flowmeter. However, fluid density normally varies and, because the float density is not adjustable to follow the fluid density changes, a compromise is made. The mean fluid density is used to establish the float density. A 10% fluid density change from the reference causes only a 0.5% inaccuracy in mass flow measurement. The mass rotameter can be used only for low-viscosity fluids such as raw sugar juice, gasoline, jet fuels, and other light hydrocarbons.

Although the vast majority of rotameters operate at errors of 2 to 10% of full scale, some are available with percent-of-rate performance. Logarithmic scale meters are designed to give the same percent-of-rate accuracy at all scale positions over the 10:1 range of the meter. Accuracy statements of 0.5% of rate and 1% of rate are available. The high-accuracy type rotameter finds greatest application in laboratory testing, development, and production, where best accuracy is mandatory.

The meter is not affected by upstream piping effects. The meter can be installed with practically any configuration of piping before the meter entrance. For vacuum applications, a valve should be installed at the outlet of the rotameter to permit virtually atmospheric conditions at the inlet and inside the metering tube. This configuration will help preserve the validity of STP calibrations.

© 2003 by Béla Lipták

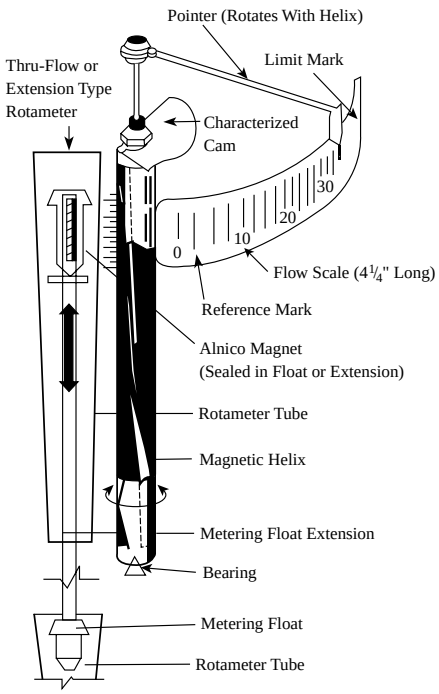

FIG. 2.27f
Magnetic coupling operates external indicator or transmitter across stainless-steel rotameter tube.

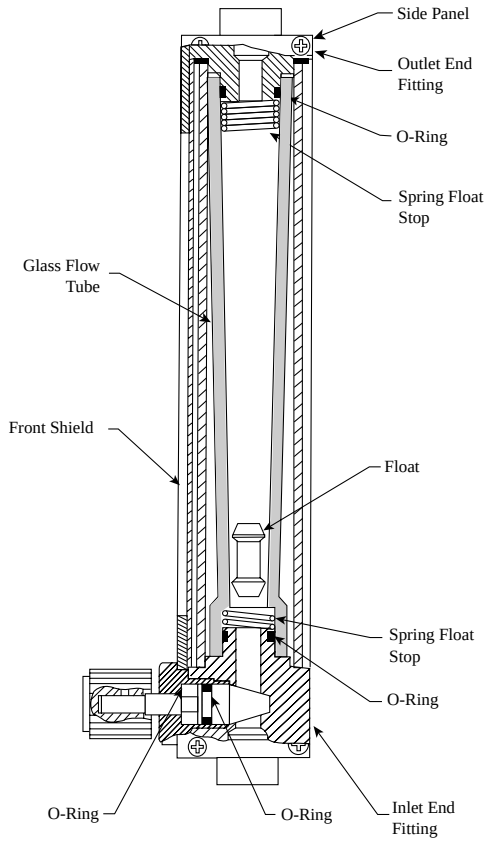

FIG. 2.27g
Typical tapered glass tube rotameter. (Courtesy of AALBORG Instruments.)

The rotameter is a highly developed flowmeter. The meters are available with an extremely broad selection of alarms, indicators, transmitters (Figure 2.27f), totalizers, controllers, and recorders. A choice of totalizers, controllers, recorders, indicators, and alarms are available locally at the flowmeter. Practically any combination of system requirements can be handled by the accessories and instruments associated with rotameters.

Rotameter Types

Figure 2.27g shows a cross-sectional view of a representative general-purpose rotameter. The meter is almost always used for flow indication only. A wide choice of materials are available for the float, packing, O-rings, and end fittings to handle the widest selection of fluids. The only fluids that cannot be handled are those that attack the glass metering tube. The meters also are limited to the pressure and temperature extremes of the glass metering tube, and by safety considerations. The accuracy of these rotameters is usually ±1 to ±2% of full scale.

Metal tube meters are used when the general-purpose meters cannot be applied. They can be used for hot (above 100°F or 38°C) and strong alkalies (above 20% concentration), fluorine, hydrofluoric acid, hot water (above 200°F or 93°C), steam, slurries, or molten metals where glass cannot be used. This classification of meters is used where the operating temperature and pressure exceed the ratings of the glass tube or, generally, where transmission of electronic or pneumatic signals is needed. A typical metal tube meter is shown in Figure 2.27h.

Bypass and Pitot Rotameters

The cost of a rotameter installation can be reduced if, instead of a full pipe-size rotameter, an orifice or pitot tube is used in the main pipeline to develop a pressure drop. This, in turn, causes a related small flow that can be directed through an inexpensive bypass rotameter. Such units are illustrated in Figures 2.27i and 2.27j. The pitot-type can be used in pipe sizes of 1.5 in (38 mm) and larger, whereas the orifice bypass assemblies are available from 0.375 to 20 in. (1 to 51 cm) pipe diameters. In some designs, the bypass rotameter is provided with a range orifice that is sized to lift the rotameter float to the maximum position when the flow in the main line is at maximum. The flow measurement is linear over a 10:1 range and is accurate to about 2% of full scale with the orifice and to 5 to 10% of full scale with the pitot design. These units are usually designed for clean process streams such as water and air and are provided with easily accessible filters for periodic cleaning. The bypass rotameters are also available with isolation valves to allow for their removal and maintenance while the process is in operation.

© 2003 by Béla Lipták

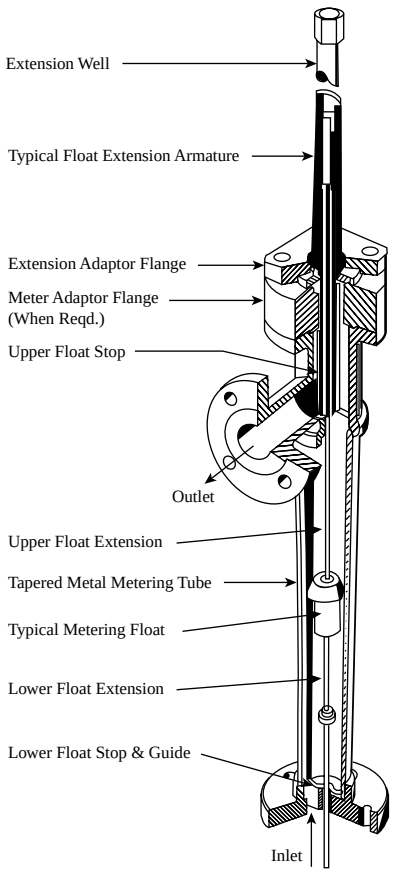

FIG. 2.27h
Metallic tube rotameter.

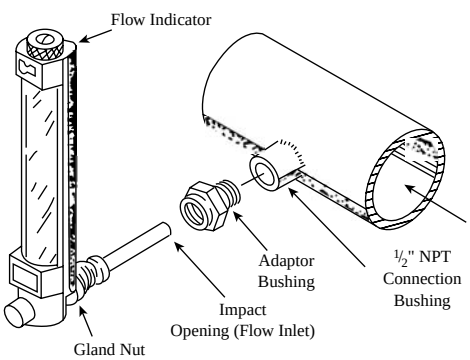

FIG. 2.27i
Pitot rotameter with bypass flow entering through impact opening (facing flow) and leaving through static port on opposite side (not shown). (Courtesy of ABB Fischer & Porter Co.)

TAPERED PLUG AND PISTON METERS

Tapered-plug variable-area flowmeters are made with metallic meter bodies and are used on higher-pressure applications where errors of 5 to 10% full scale can be tolerated. They can be gravity operated (Figure 2.27k) or spring loaded

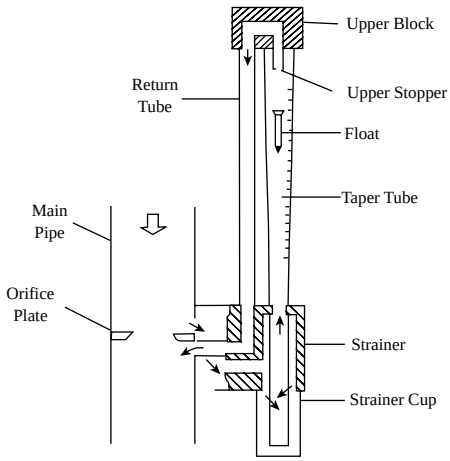

FIG. 2.27j
Bypass rotameter. (Courtesy of OSMONICS/Aquamatic.)

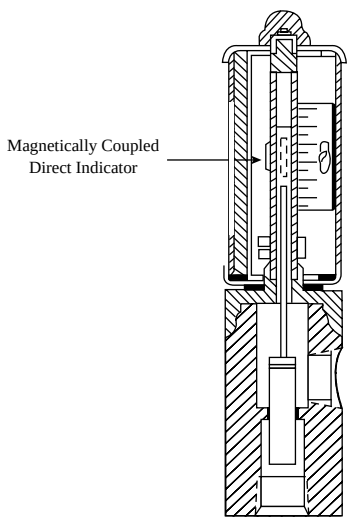

FIG. 2.27k
Tapered-plug variable-area flowmeter. (Courtesy of Brooks Instrument Div. of Rosemount.)

(Figure 2.27l) and can handle pressures exceeding 1000 PSIG (70 bars). Their sizes range from ¼ to 4 in. (6 to 100 mm), and their body materials include brass, aluminum, steel, stainless steel, and PVC. The gravity-operated units must be installed vertically, whereas the spring-loaded ones can also be horizontal. One common application is to detect the flow rate of high-pressure oil.

One type of variable-area flowmeter operates a piston in a perforated cylinder (see Figure 2.27m). This instrument is less expensive than a regular rotameter. It has been designed for clean liquid flows at rates up to 120 GPM (450 l/min) or gas flows up to 700 SCFM (20 SCMM) with pressures up to 100 PSIG (7 bars) and temperatures up to 400°F (205°C).

© 2003 by Béla Lipták

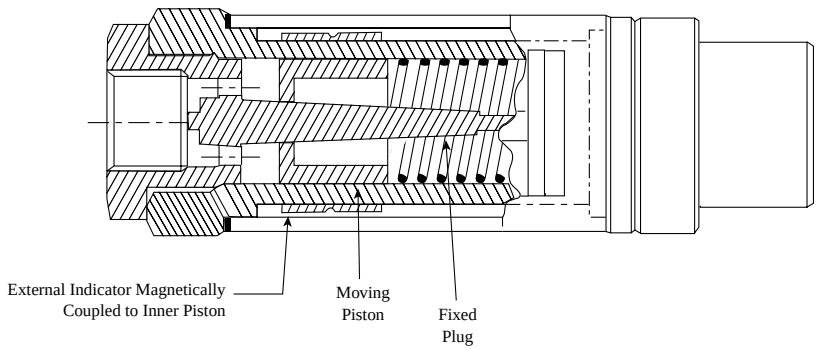

FIG. 2.27l
Tapered plug and spring-loaded piston. (Courtesy of Headland Div. of Racine Federated Inc.)

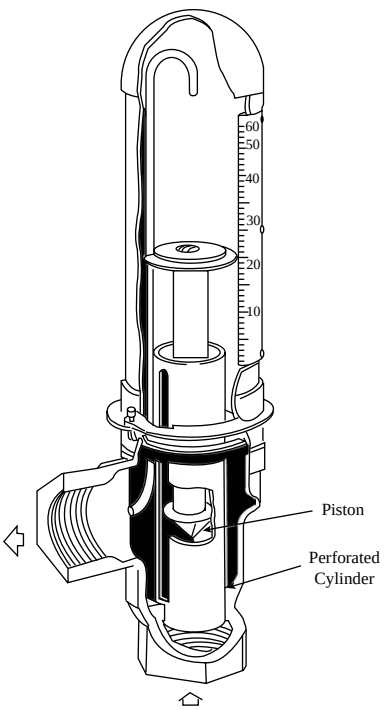

FIG. 2.27m
Piston in perforated cylinder variable-area flowmeter.

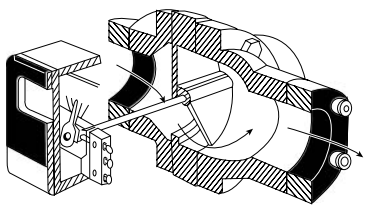

FIG. 2.27n
Rotary vane-type variable-area meter. (Courtesy of Universal Flow Monitors Inc.)

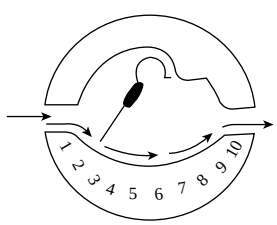

FIG. 2.27o
Magnetically coupled vane. (Courtesy of ERDCO Engineering Corp.)

GATES AND VANES

A family of variable-area flowmeters operates by the flowing stream lifting hinged gates or forcing spring-loaded vanes to open. The variable gate is a mix of a variable-area and a flume-type flowmeter. It is used to measure wastewater or other liquids in open channels or in partially filled pipes. The meter can be inserted into 6- or 8-in. (150- or 200-mm) diameter pipes. A stainless-steel ring holds it in place, and an inflatable bladder seals the insert so that all the flow will pass through the gate opening. The pivoted gate opening is pneumatically controlled and is measured along with the upstream level to arrive at the actual flow. The same 8-in. (200-mm) insert can measure the flow from 0.25 to 500 GPM (1 to 1900 l/min). Reasonable accuracy is obtained over this nearly 2000:1 flow range. Up to 10 GPM (38 l/min), the maximum error is 0.75 GPM (2.8 l/min); at higher flows, it is claimed to be 7.5% of actual reading. The meter is provided with data storage, printer, and local or remote monitoring capability.

One vane-type variable-area flowmeter resembles a butterfly valve (Figure 2.27n). The changing flow through the orifice area forces the spring-loaded vane to rotate. A shaft attached to the vane operates a pointer giving local flow rate indication. The measurement error is 2 to 5% of full scale. The meter can be used on oil, water, air, and other services and is available in ¼- to 4-in. (6- to 100-mm) sizes and in most standard materials. This variable-area flowmeter is frequently used as an indicating flow switch for safety interlock purposes.

Another vane-type variable-area flowmeter is illustrated in Figure 2.27o. This unit can also measure the flow rates of liquids, gases, and steam and is available in sizes from ½ to 12 in. (12 to 300 mm). The flow indicator is magnetically

© 2003 by Béla Lipták

coupled to the vane, and the indication is claimed to be accurate within 2% of full scale over a 10:1 range. The flow direction through the meter can be left-to-right, right-to-left, or vertical. Operating pressures are limited to 200 PSIG (1.4 MPa). Operating temperatures are limited to 250°F (120°C) in standard and to 400°F (205°C) in units with Viton® O-rings. The housing can be aluminum, brass, copper/nickel, or stainless steel. A limitation or a possible source of error to be considered for this type of a variable area meter is posed by nearby strong electromagnetic fields that could interfere with the magnetic coupling of the indicator.

Bibliography

Blasso, L., Flow measurement under any conditions, *Instrum. Control Syst.*, February 1975.

Boyes, W. H., The fundamentals of variable area meters, *Flow Control*, August 2001.

Churchill, S. W., *Viscous Flows, The Practical Use of Theory*, Butterworths Series in Chemical Engineering, Butterworth-Heinemann, Woburn, MA, October 1988.

Cross, D. E., Rotameter calibration nomograph for gases, *Instrum. Tech.*, 53–56, April 1969.

DeCarlo, J. P., *Fundamentals of Flow Measurement*, ISA, Research Triangle Park, NC, 1984.

Des Marais, P. O., Variable-area meter for viscous service, *Instrum. Control Syst.*, August 1961.

Eren, H., Flowmeters, in *Survey of Instrumentation and Measurement*, S.A. Dyer, Ed., John Wiley & Sons, New York, 2001.

Gilmont, R., *Instrum. Control Syst.*, November 1961.

Hall, J. Solving tough flow monitoring problems, *Instrum. Control Syst.*, February 1980.

Instrument Society of America, Recommended Practices RP16.1, RP16.2, RP16.3, RP16.4, RP16.5, and RP16.6. (These documents deal with the terminology, dimensions, installation, operation, maintenance, and calibration of rotameters.)

Lipták, B. G., Flow measurement trends, *Control*, June 2000.

Miller, R. W., *Flow Measurement Engineering Handbook*, 3rd ed., McGraw-Hill, New York, 1996.

Polentz, L. M., Theory and operation of rotameters, *Instrum. Control Syst.*, June 1961.

Sanford, J., What should you know about flow monitoring devices, *Instrum. Control Syst.*, September 1976.

Spitzer, D. W., *Flow Measurement Practical Guide Series*, 2nd ed., ISA, Research Triangle Park, NC, 2001.

Yoder, J., Flowmeter shootout, part II: traditional technologies, *Control*, February 2001.

© 2003 by Béla Lipták

2.28 V-Cone Flowmeter

B. G. LIPTÁK (1995) **W. H. BOYES, JR.** (2003)

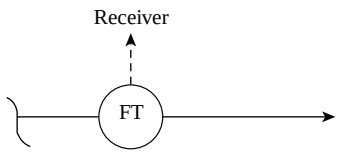

Flow Sheet Symbol

Applications	Liquids, gases, and steam
Sizes	From 0.5 to 72 in. (12 mm to 1.8 m) in V-cone From 0.5 to 6 in. (12 mm to 150 mm) in wafer-cone
Materials of Construction	V-cone: All type 316 stainless-steel or PVC construction with cone made out of stainless steel, PVC, or Teflon®-coated aluminum Wafer-cone: machinable in any material according to the supplier
Design Pressure	150 to 600 PSIG (10.3 to 41.4 bars) with flanged connections; higher with threaded connections
Design Temperature	From cryogenic to 700°F (371°C)
Pressure Differential	The low-range d/p cell can have a 0- to 2-in. (51-mm) H_2O range, and the high-range cell can have 0- to 30-in. (762-mm) H_2O range. If even higher rangeability is needed, a third 0- to 250-in. (6.35-m) H_2O d/p cell can be added.
Reynolds Numbers	Square root relationship is maintained down to Re = 8000.
Inaccuracy	This is a function of the calibration and accuracy of d/p cell used. With two transmitters, a 0.25% error of actual span used can be expected.
Rangeability	Over 10:1 if two transmitters are used, one for high the other for low pressure drop
Straight Pipe Run Requirements	Supplier recommends 1 to 3 diameters upstream and 1 diameter downstream.
Beta Ratios	From 0.45 to 0.85 in either version
Cost	A 0.5-in. (12-mm) flow element costs $500. A high-quality d/p transmitter costs approximately $1200.
Partial List of Suppliers	McCrometer (www.mccrometer.com)

In a venturi-cone (V-cone) meter, a cone is positioned in the center of a metering tube (Figure 2.28a). This cone reduces the cross-sectional area available for the process flow and, much like an orifice restriction, generates a low-pressure region downstream of the flow element. The square root of the difference between the low pressure downstream and the upstream pressure is related to the flow through the meter.

THEORY OF OPERATION

The flow or pressure drop through the V-cone meter can be calculated on liquid service using the following equations:

$$Q = 29.808 \times \frac{\beta^2 \times D^2}{\sqrt{1-\beta^4}} \times \sqrt{\Delta P} \qquad \textbf{2.28(1)}$$

$$\Delta P = \frac{Q^2 \times (1-\beta^4)}{888.517 \times \beta^4 \times D^4} \qquad \textbf{2.28(2)}$$

© 2003 by Béla Lipták

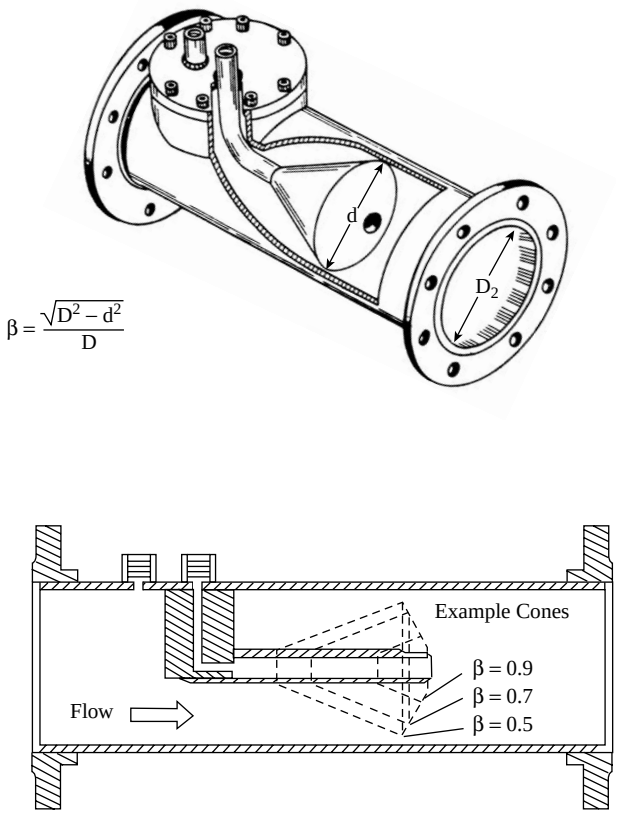

FIG. 2.28a
The V-Cone flowmeter requires less upstream straight pipe and maintains the square root relationship between flow and pressure drop at lower Reynolds numbers than does an orifice plate. (Courtesy of McCrometer Div. of Danaher Corporation.)

where

Q = water flow in GPM
D = inside diameter of the process pipe in inches
d = outside diameter of the cone in inches
ΔP = pressure drop at full flow in PSID
β = beta ratio defined as $\sqrt{D^2 - d^2}/D$

The main difference between an orifice plate and a V-cone element is that, at lower Reynolds numbers (where the velocity profile is no longer flat, as in the highly turbulent region, but starts to take on the shape of an elongated parabola, with the maximum velocity in the center of the pipe), the cone element tends to flatten the velocity profile. This is caused by the cone, which interacts with most of the flowing stream and tends to slow the flow velocity in the center while increasing it near the wall. This flow conditioning effect results in a velocity profile that is more uniform across the pipe and therefore closer to the fully developed turbulent behavior than it would be otherwise.

OPERATING FEATURES

According to the supplier, this flattening of the velocity profile results in a true square-root relationship down to a Reynolds number of 8000. Below that, the transitional and later laminar flow behavior does develop, gradually changing the square root relationship into a linear one. As with all other d/p flow elements, the V-cone is also usable in the transitional or laminar regions, but the interpretation of the pressure drop developed becomes more complex than just taking the square root. It requires the use of an accurately developed calibration curve, which can be read by the operator or can be placed into the computer's memory.

The manufacturer of the V-cone flowmeter claims very high (30:1) rangeabilities and similarly high accuracies (0.5% of actual flow), presumably over such ranges. These claims are excessive. On the other hand, we can agree that 0.1% of actual span d/p cells are available. If we use two of them (a high and a low span), we can obtain a combined range of a 100:1 in terms of pressure drop, which corresponds to 10:1 in terms of flow, and the accuracy over that range can be 1% of actual flow. Two points should be made in this connection. One is that such performance assumes that the flow element is accurately calibrated over the complete flow range. The other is that this performance can be obtained from all properly calibrated d/p flow elements, not just from the V-cone.

In addition to maintaining turbulent conditions at lower Reynolds numbers, the V-cone has the added advantage over the sharp-edged orifice of requiring less maintenance, because the flow is directly away from the cone edge. Therefore, the edge is not likely to wear. Because of the cone geometry, it also provides a sweeping action that eliminates stagnant areas and prevents gas accumulation or solids entrapment that can occur in front of sharp-edged orifices. The straight-pipe run requirements suggested by the manufacturer are substantially below those required by orifices: two diameters upstream and five downstream. This is because the cone reshapes the incoming nonuniform velocity profiles and thereby reduces the effect of upstream disturbances.

The V-cone flowmeter should be installed horizontally so that the two pressure taps are at the same elevation. This guarantees that the d/p cell will see zero pressure differential when there is no flow. If the unit is installed at a slope or vertically, it is necessary to zero out the hydrostatic head difference between taps. Any transmitting or indicating device can detect the differential pressure generated by the flow element. The manufacturer can also supply such devices, including "smart registers," that are capable of totalization and digital or analog retransmission.

A modification of the V-cone design is the wafer-cone (Figure 2.28b), which, according to the manufacturer, can be made from any material.

© 2003 by Béla Lipták

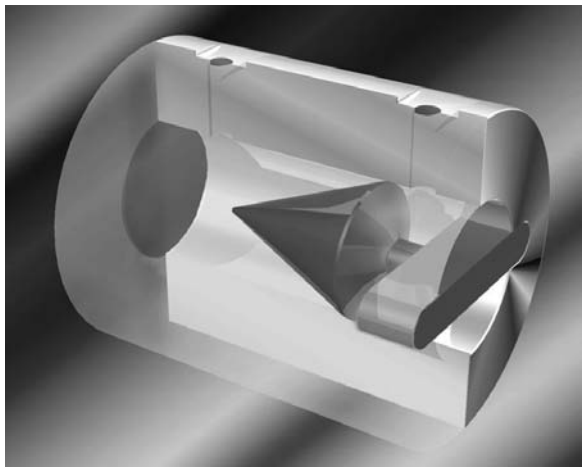

FIG. 2.28b
Wafer-Cone design modification of standard V-Cone. (Courtesy of McCrometer Div. of Danaher Corporation.)

Bibliography

Cushing, M., The future of flow measurement, *Flow Control*, January 2000.

De Boom, R. J., Flow meter evaluation, ISA Conference, Paper #91–0509, 1991.

Flow measurement solved with venturi-cone meter, *InTech*, February 1989.

Husain, Z. D., Flowmeter Calibration and Performance Evaluation, ISA Conference, Paper #91–0508, 1991.

Ifft, S. A., Custody Transfer Flow Measurement with New Technologies, Saudi Aramco, Dhahran, Saudi Arabia, 1999.

Miller, R. W., *Flow Measurement Engineering Handbook*, 3rd ed., McGraw-Hill, New York, 1996.

Rusnak, J., The fundamentals of flowmeter selection, *InTech*, April 1989.

Southwest Research Institute, Final Report, Baseline and Installation Effects Tests of the V-Cone Meter, San Antonio, TX, 1994.

Spitzer, D. W., *Flow Measurement Practical Guide Series*, 2nd ed., ISA Press, Research Triangle Park, NC, 2001.

© 2003 by Béla Lipták

2.29 Venturi Tubes, Flow Tubes, and Flow Nozzles

W. H. Howe (1969) **L. D. Dinapoli** (1995) **J. B. Arant** (1982, 2003)

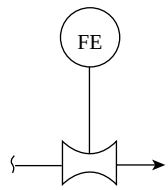

Flow Sheet Symbol

Design Types	A. Venturi tubes B. Flow tubes C. Flow nozzles
Design Pressure	Usually limited only by transmitter, readout device or by pipe pressure ratings
Design Temperature	Limited only by readout device, if operation is at very low or high temperature
Sizes	A. 1 in. (25 mm) up to 120 in. (3000 mm) B. 4 in. (100 mm) up to 48 in. (1200 mm) C. 1 in. (25 mm) up to 60 in. (1500 mm)
Fluids	Liquids, gases, and steam
Flow Range	Limited only by minimum and maximum beta (β) ratio and available pipe size range
Inaccuracy	Values given are for flow elements only; d/p cell and readout errors are additional A. ±0.75% of rate uncalibrated to ±0.25% of rate calibrated in a flow laboratory B. May range from ±0.5 to ±3% of rate depending on the particular design and variations in fluid operating conditions C. ±1% of rate uncalibrated to ±0.25% calibrated
Materials of Construction	Virtually unlimited. Cast venturi tubes are usually cast iron, but fabricated venturi tubes can be made from carbon steel, stainless steel, most available alloys, and fiberglass plastic composites. Flow nozzles are commonly made from alloy steel and stainless steel.
Pressure Recovery	Ninety percent of the pressure loss is recovered by a low-loss venturi when the beta (β) ratio is 0.3, whereas an orifice plate recovers only 12%. (The corresponding energy savings in a 24-in. [600-mm] waterline is about 20 HP.)
Reynolds Numbers	Venturi and flow tube discharge coefficients are constant at Re > 100,000. Flow nozzles are used at high pipeline velocities (100 ft/s or 30.5 m/s), usually corresponding to Re > 5 million. Critical flow venturi nozzles operate under choked conditions at sonic velocity.
Costs	Flow nozzles are less expensive than venturi or flow tubes, but cost more than orifices. ASME gas flow nozzles in aluminum for 3- to 8-in. (75- to 200-mm) lines cost from $300 to $1000. Epoxy-fiberglass nozzles for 12- to 32-in. (300- to 812-mm) lines cost from $1000 to $3000. The relative costs of Herschel venturies and flow tubes in different sizes and materials are given below:

	6-in. Stainless Steel	*8-in. Cast Iron*	*12-in. Steel*
Herschel venturi	$9000	$6000	$6500
Flow tube	$4000	$2500	$3200

© 2003 by Béla Lipták

Partial List of Suppliers

ABB Automation Instrumentation Division (www.abb.com/us/instrumentation) (B)
ABB Water Meters Inc. (www.jerman.com/abbmeter.html) (B)
Badger Meter Inc. (www.badgermeter.com) (A, B)
BIF Products (A, B, C)
Daniel Measurement and Control (www.danielind.com) (A, C)
Flow Technology Inc. (www.ftimeters.com) (A)
Fluidic Techniques Inc. (A)
Preso Industries (A, B)
Primary Flow Signal Inc. (A, C)
Tri-Flow Inc. (A)
West Coast Research Corp. (www.members.aol.com/wescores) (A)

Venturi tubes, flow nozzles, and flow tubes, like all differential pressure producers, are based on Bernoulli's theorem. General performance and calculations are similar to those for orifice plates. In these devices, however, there is continuous contact between the fluid flow and the surface of the primary device, in contrast to the pure line contact between the orifice plate edge and main flow. The surface finish of the devices can have some effect on the meter coefficient, although the venturi tube has a relatively constant coefficient, seldom varying more than a fraction of 1%. Modern precision manufacturing techniques allow much greater accuracy of the coefficient for venturi tubes and flow nozzles computed from dimensions, and the coefficients are only moderately less reliable than those for orifice plates. The C (meter coefficient) values for venturi tubes and flow nozzles have been well established by years of test data and are tabulated in sources such as the handbook called *Fluid Meters—Their Theory and Application*.[1] In general, this is not true of the proprietary flow tubes, and flow calibration is required to establish the actual meter coefficient. Meter coefficients for venturi tubes and flow nozzles are approximately 0.98 to 0.99 and for orifice plates average about 0.62. Therefore, almost 60% (98/62) more flow can be obtained through these elements for the same differential pressure.

THE CLASSIC VENTURI

The venturi tube, as designed by Clemens Herschel in 1887 and described in Reference 1, is shown in Figure 2.29a. It consists of

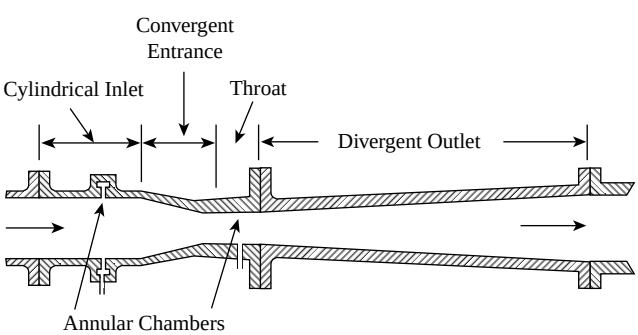

FIG. 2.29a
Classic Herschel venturi with annular pressure chambers.[1]

- A cylindrical inlet section equal to the pipe diameter
- A converging conical section in which the cross-sectional area decreases, causing the velocity to increase with a corresponding increase in the velocity head and a decrease in the pressure head
- A cylindrical throat section where the velocity is constant so the decreased pressure head can be measured
- A diverging recovery cone where the velocity decreases and almost all of the original pressure head is recovered

The unrecovered pressure head is commonly called *head loss*.

The classic venturi is always manufactured with a cast-iron body and a bronze or stainless-steel throat section. At the midpoint of the throat, six to eight pressure taps connect the throat to an annular chamber so that the throat pressure is averaged. The cross-sectional area of the chamber is 1.5 times the cross-sectional area of the taps. Because there is no movement of fluid in the annular chamber, the pressure sensed is strictly static pressure. Usually, four taps from the external surface of the venturi into the annular chamber are made. These are offset from the internal pressure taps. Throat pressure is measured through these taps. This flow meter is limited to use on clean, noncorrosive liquids and gases, because it is impossible to clean out or flush out the pressure taps if they clog up with dirt or debris. The flow coefficient for the classic venturi is 0.984, with an uncertainty tolerance of ±0.75%.

SHORT-FORM VENTURIES

In the 1950s, in an effort to reduce costs and laying length, manufacturers developed the second-generation, or *short-form*, venturi shown in Figure 2.29b. There were two major differences in this design. The internal annular chamber was replaced by a single pressure tap or, in some cases, an external pressure averaging chamber, and the recovery cone angle was increased from 7 to 21°. The short-form venturi can be manufactured from cast iron or welded from a variety of materials as compatible with a given application. The flow coefficient for the short-form venturi is 0.985, with an uncertainty tolerance of ±1.5%.

The pressure taps are located one-quarter to one-half pipe diameter upstream of the inlet cone and at the middle of the throat section. A piezometer ring is sometimes used for differential pressure measurement. This consists of several holes

© 2003 by Béla Lipták

in the plane of the tap locations. Each set of holes is connected in an annulus ring to give an average pressure. Venturies with piezometer connections are unsuitable for use with purge systems used for slurries and dirty fluids, because the purging fluid tends to short circuit to the nearest tap holes. Piezometer connections are normally used only on very large tubes or where the most accurate average pressure is desired to compensate for variations in the hydraulic profile of the flowing fluid. Therefore, when it is necessary to meter dirty fluids and use piezometer taps, sealed sensors that mount flush with the pipe and throat inside wall should be used. These sensors function as independent measuring devices at each tap connection, yet they function together to read differential pressure only while automatically compensating for static pressure changes within the pipe. Single-pressure-tap venturies can be purged in the normal manner when used with dirty fluids. Because the venturi tube has no sudden changes in contour, no sharp corners, and no projections or stagnant areas, it is often used to measure slurries and dirty fluids that tend to build up on or clog other primary devices.

Venturies are built in several forms. These include the standard long-form or classic venturi (Figure 2.29a), a modified short form where the outlet cone is shortened (Figure 2.29b), an eccentric form (Figure 2.29c) to handle mixed phases or to minimize buildup of heavy materials, and a rectangular form (Figure 2.29d) used in ductwork. If a rectangular venturi is substantially square, it is customary to converge–diverge all four sides with angles the same as for the circular form. Where duct width differs from height, the short sides are kept parallel, with the long sides converging–diverging. A converging angle of 21° and a diverging angle of 15° give satisfactory operation. Throat length should be equal to minimum throat height or width, whichever is smaller. Tap locations are the same as for the circular form.

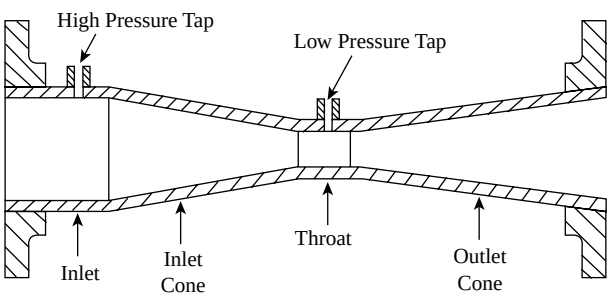

FIG. 2.29b
Short-form venturi tube.

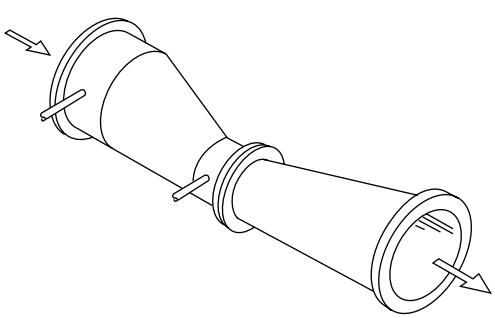

FIG. 2.29c
Eccentric venturi tube.

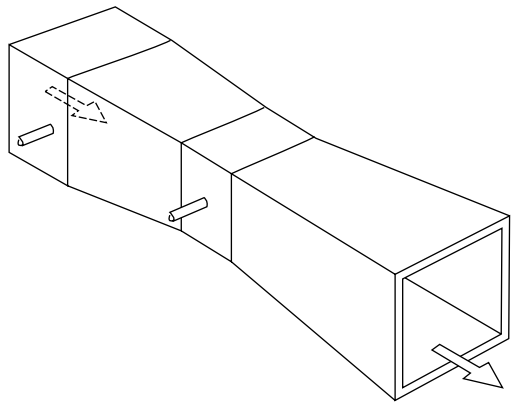

FIG. 2.29d
Rectangular venturi tube.

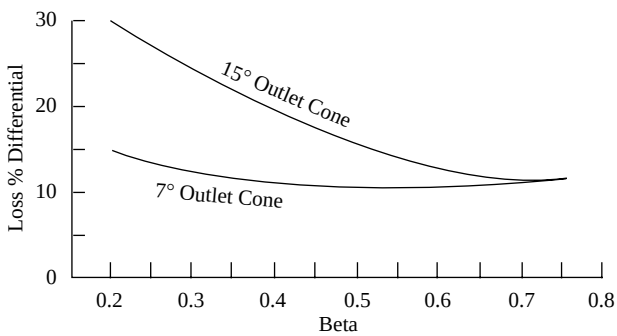

FIG. 2.29e
Venturi pressure loss.

The angle of convergence, which may range from 19 to 23°, is the classical value established by Herschel in 1887. This angle is not particularly critical, and 21 ± 1° is commonly used. The recovery cone provides pressure recovery with its smooth flow transition. The classic long cone form is 7.5° ± 0.5° on the divergence, but up to 15° is allowed, and the sharper angle allows the short-form version to be fabricated. The 15° outlet cone sacrifices a modest amount of pressure recovery (Figure 2.29e). The venturi pressure loss of 10 to 25% is the lowest of the standard primary head measurement elements. The long-cone form develops up to 89% pressure recovery at 0.75β ratio, decreasing to 86% at 0.25β ratio. The short-cone form develops up to 85% recovery at 0.75β, decreasing to 75% at 0.25β ratio. As an example of the power savings to be obtained in an energy-short era, an added pressure recovery of 50 in. (1270 mm) H_2O differential pressure can represent a 10-HP savings in a 24-in. (610-mm) water line flowing at a velocity of 6 ft/s (1.829 m/s). For a comparison of various head-meter elements from the pressure recovery point of view, see Figure 2.29f.

© 2003 by Béla Lipták

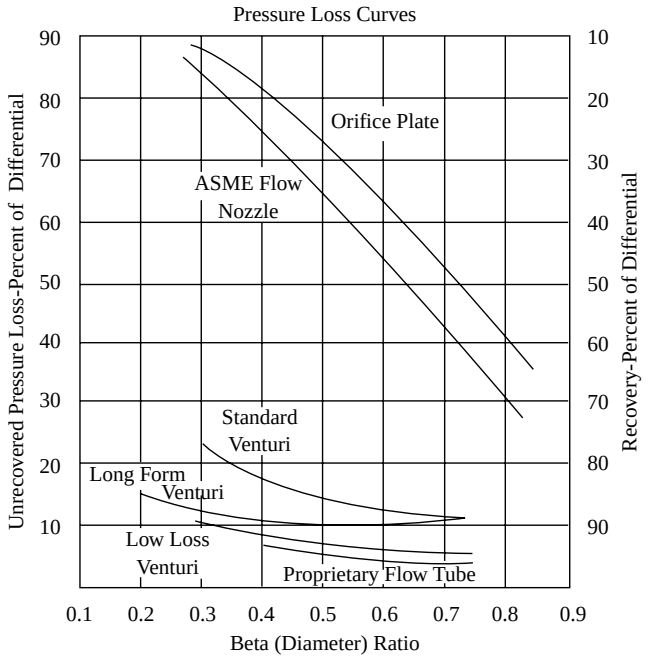

FIG. 2.29f
Pressure loss curves.

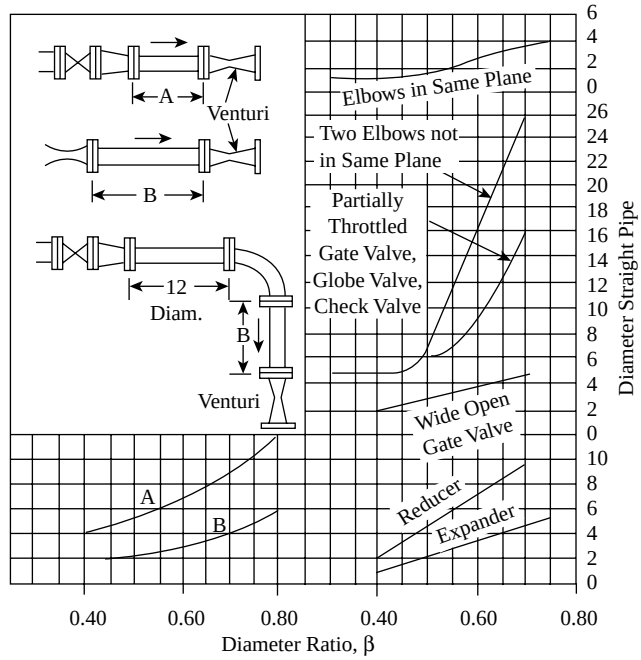

FIG. 2.29g
Venturi piping requirement.

Installation

A venturi tube may be installed in any position to suit the requirements of the application and piping. The only limitation is that, with liquids, the venturi is always full. In most cases, the valved pressure taps will follow the same installation guidelines as for orifice plates.

Upstream piping should be as long as needed to provide a proper velocity profile (Figure 2.29g). However, in most installations, shorter upstream piping is required than for orifices, nozzles, or pitot tubes, because the venturi hydraulic shape itself provides some flow conditioning. Often, the combined length of a venturi and its upstream piping is less than the overall amount of piping required for an orifice or nozzle. Figure 2.29h shows typical upstream pipe diameters required for various elements at 0.7β ratio and one elbow upstream. Straightening vanes can be used upstream to reduce the inlet pipe length.

In *Fluid Meters*,[1] the ASME recommends the use of tubular straightening vanes (19 tubes and 2 diameters long) upstream of the venturi to reduce the inlet pipe length. The vane installation should have a minimum of 2 diameters upstream and 2 diameters downstream before entering the venturi.

There is no limitation on piping configuration downstream of the venturi except that a valve should be no closer than two diameters. Valves on other devices that protrude into the flow stream should not be mounted upstream of the venturi, if possible.

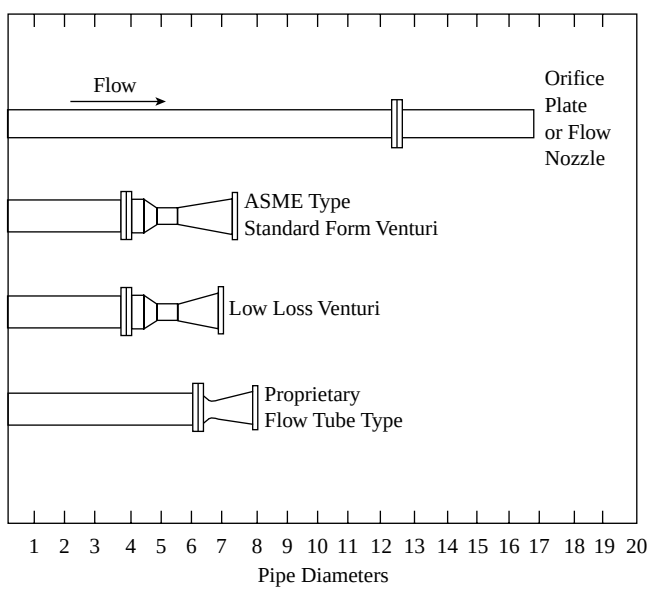

FIG. 2.29h
Typical installation piping comparison.

Flow Calculations

The American Society of Mechanical Engineers Fluid Research Committee has adopted a general coefficient of discharge of 0.984 for the classic rough-cast entrance cone venturi tube from 4 in. (100 mm) through 32 in. (813 mm) and for β ratios between 0.3 and 0.75. For tubes with machined entrance cones, the general coefficient is 0.995. The Reynolds number must be 200,000 or greater. Approximate flow rates can be calculated from a working equation,

$$W = 353d^2\sqrt{\frac{h\rho}{1-\beta^4}} \qquad \textbf{2.29(1)}$$

© 2003 by Béla Lipták

and, for approximate venturi tube design,

$$\beta = \frac{1}{\sqrt[4]{\dfrac{1 + 125{,}000 h \rho D^4}{W^2}}} \qquad \textbf{2.29(2)}$$

For Reynolds numbers between 50,000 and 200,000, substitute 344 for 353. Below 50,000, reliable data are not available. It should be noted that, it contrast to an orifice, a decrease in Reynolds number results in a decrease of flow corresponding to a given differential pressure. Other correction factors, such as temperature coefficient of expansion, gas expansion factor, and so on, are similar to those for orifices and flow nozzles.

FLOW TUBES

There are several proprietary primary-head-type devices that have a higher ratio of pressure developed to pressure lost than a venturi tube (Figure 2.29i). They are all considerably more compact than the classical venturi tube, with its long recovery cone, although the short-from venturi can come close to some types of these tubes.

These designs are available in cast iron, can be welded from various materials, and in some cases can have insert-type units in fiberglass-reinforced plastic or metal. The flow coefficient ranges from 0.9797 for an all-static-tap "near venturi" design to 0.75 for an all-corner-tap "flow tube" design. All of these proprietary units are available in the United States except the Dall tube, which was developed in England. All of these tubes vary in contour used, tap locations, and differential pressure and pressure loss for a given flow. All have a laying length less than 4 diameters long. The shortest are the corner tap designs, with lengths equaling 2 to 2.5 diameters.

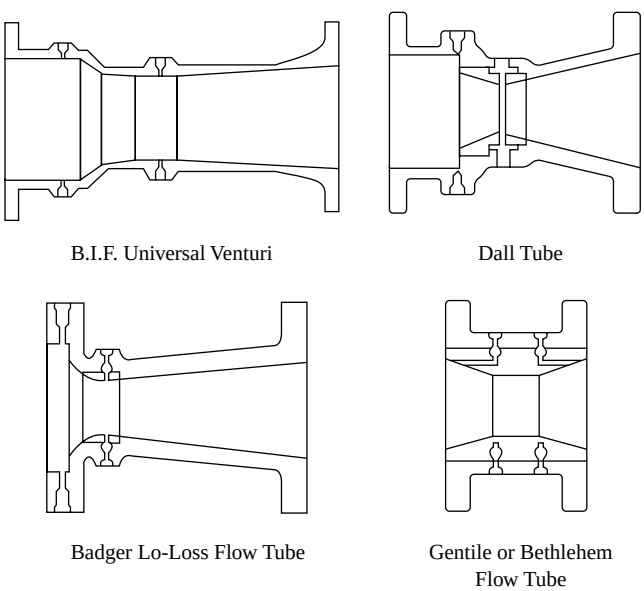

FIG. 2.29i
Proprietary flow tubes.

A *flow tube* is broadly defined by the ASME as any differential-pressure-producing primary whose design differs from the classic venturi. Flow tubes fall into three main classes, depending on the hydraulic position of the inlet and throat pressure tap. Type 1 has static pressure taps at both the inlet and outlet, Type 2 has a corner tap in the inlet and a static tap in the throat, and Type 3 has a corner tap at both the inlet and outlet.

The classic venturi had static pressure taps that provided a section in which the velocity is not changing direction and is parallel to the pipe wall. A corner tap senses pressure in a section where the velocity is changing direction and is not parallel to the pipe wall. Figure 2.29i shows examples of several flow tubes.

Type 3 flow tubes can be useful in larger sizes because of their shorter lay length, but they may also require longer upstream pipe runs for proper performance. They can be subject to coefficient change due to variations in Reynolds number, line size, and beta ratio; manufacturers can provide data on these effects.

The B.I.F. Universal Venturi is the product (Type 1) that most closely approaches the Herschel design classic venturi. The inlet cone has two *vena contracta* angles that condition the fluid as it enters the throat. This is claimed to reduce the sensitivity to upstream piping configuration and give higher accuracy. Also claimed are a stable coefficient (0.9797) that is unaffected by internal surface roughness, lower Reynolds number application (90,000), low head loss (4 to 18%), and extensive documentation including expansion factors.

Whereas flow tubes can be useful in larger sizes because of their shorter lay length, they may also require longer upstream pipe runs than the venturi for proper performance and thus lose any real advantage. They can be subject to coefficient change with viscosity and Reynolds number; manufacturers can provide data on these effects. None has the smooth contour and resistance to clogging of the venturi meter; however, some are claimed to operate satisfactorily on wastewater and sewage flow measurement.

In general, these devices are available in 4-in. (100-mm) and larger sizes up to 48 in. (1219 mm). There is little justification for their use in small-flow, small-pipe applications. In the larger sizes, their installed cost may be less than that of the venturi tube. Accuracy depends basically on the manufacturer's calibration data. Derivation of the flow coefficient by extrapolation from theory and tests on smaller sizes is much less direct than in the simple structure of the venturi tube; actual flow calibration, particularly in sizes above 24 in. (610 mm), can be difficult and expensive. Although these devices generally have a better pressure recovery than the venturi (expressed as a percentage of the differential), most flow tubes have a lower coefficient of discharge (less efficient). As a result, there is often very little difference in the actual head loss.

© 2003 by Béla Lipták

In selecting a primary flow element, the possible advantages of slightly lower pressure loss and shorter laying length of the flow tubes should be carefully weighed against the metering accuracy and established flow data available on the Herschel-form venturi. The ASME recommends that, if a proprietary flow tube is used, it should be calibrated with the piping section in which it is to be used and over the full range of flows to which it will be subjected. The only possible exception to this is the Universal Venturi, and it must be carefully evaluated. The background of extensive tests under a wide range of conditions that support orifice meters does not exist for these proprietary devices.

FLOW NOZZLES

There are two types of flow nozzles. The 1932 ISA nozzle is a European design that has not seen use in the United States. A special variation known as a *venturi nozzle* is a hybrid combination of a 1932 ISA nozzle inlet profile combined with the divergent cone of a venturi tube. The common nozzle used in the United States is the so-called *long-radius* or ASME flow nozzle. This nozzle comes in two versions, known as *low-beta-ratio* and *high-beta-ratio* designs. This flow nozzle, shown in Figure 2.29j, is a metering primary whose shape consists of a quarter ellipse convergence section and a cylindrical throat section. In the United States, the nozzle generally used is the long-radius ASME flow nozzle. The ASME Fluid Meters Research Committee has investigated various configurations and has developed the geometry for these nozzles based on the required beta ratio for the application. High-beta nozzles are recommended for diameter ratios between 0.45 and 0.80. Low-beta nozzles are recommended for diameter ratios between 0.20 and 0.50. For beta values between 0.25 and 0.5, either design may be used.

The difference between the two nozzles is basically a flattening of the ellipse in the high-beta-ratio version. The power test code, PTC-6, requires that the low-beta-ratio version be used in their test section for turbine acceptance.

Both types of nozzles may be either welded in the pipeline or provided with a holding ring for mounting between flanges. The latter design, shown in Figure 2.29k, is preferred when frequent inspection of the nozzle is required.

Nozzles may be manufactured from any material that can be machined; typically, they are fabricated from aluminum, fiberglass, stainless steel, or chrome-moly steel. Modern manufacturing methods and fluid contact surface finishes on the order of 6 to 10 μin result in more predictable nozzle coefficients and highly repeatable data. The standard surface finish is 16 RMS. Flow nozzle inaccuracy of ±1% is standard with ±0.25% flow calibrated. The standard coefficient, as published in Reference 1, is 0.9962 with correction factors for beta ratio and throat Reynolds number. ASME gives an uncertainty of ±–2% for nozzles having a beta ratio between 0.2 and 0.8 and throat Reynolds numbers between 1×10^5 and 2.5×10^6.

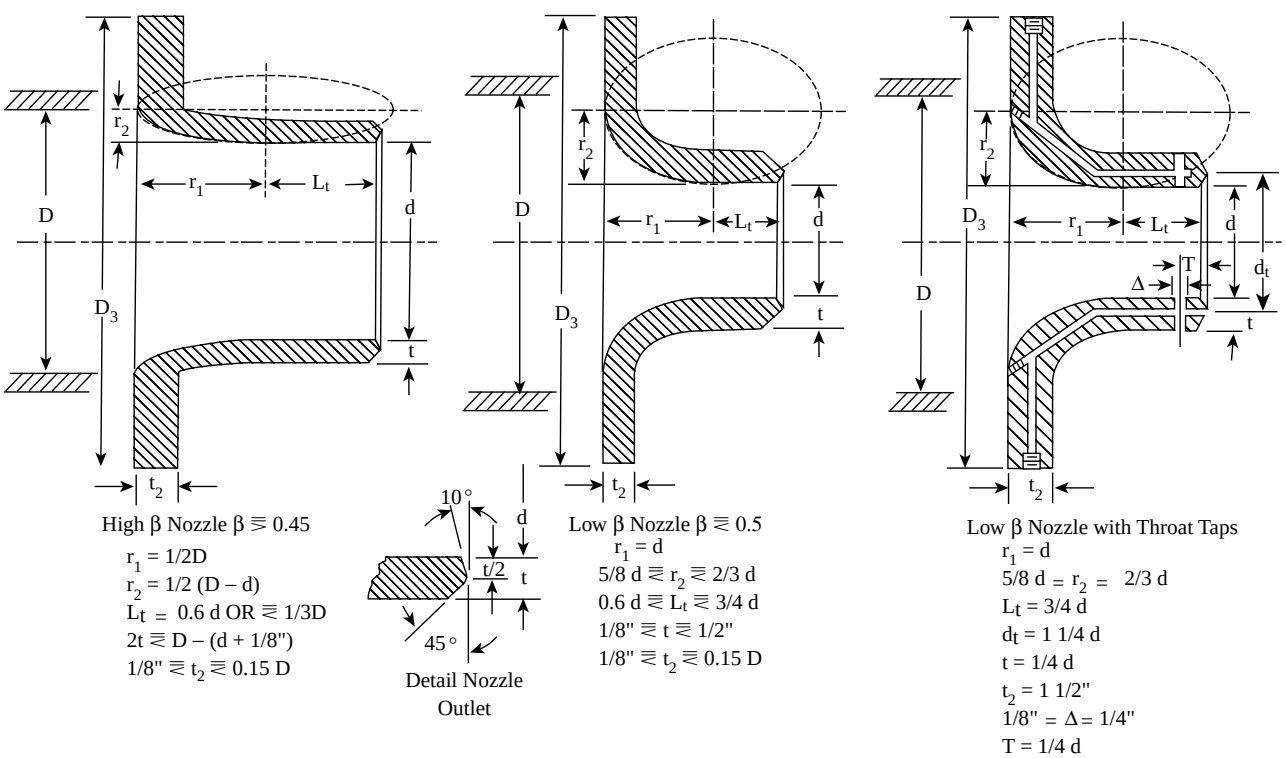

FIG. 2.29j
ASME nozzle construction.

© 2003 by Béla Lipták

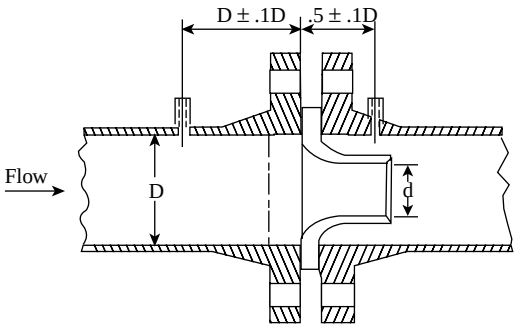

FIG. 2.29k
Typical nozzle installation.

Most ASME nozzles are calibrated as meter sections 20 pipe diameters long. As with venturi tubes, the uncertainty of calibrated units depends on the uncertainty of the hydraulic laboratory. Generally, one could expect ±0.25% uncertainty on the calibration.

The outlet or discharge side of the nozzle is normally beveled and is one of the more critical points of manufacture. Where the 10° back angle meets the throat bore, the edge must be sharp. Particular care must be taken to avoid taper and out-of-roundness of the throat.

Flow nozzles are made in various configurations. The most common is the flange type (Figure 2.29k), but others are the holding-ring type, the weld-in type, and the throat-tap type. Differential pressure measurement taps are commonly located one pipe diameter upstream and one-half pipe diameter downstream from the inlet face (U.S. practice), except for the throat-tap type, which has a special downstream construction. The PTC-6 nozzle uses throat taps to sense the low pressure and standard pipe wall taps for the high pressure.

Application Considerations

Tap installation precautions are the same as for orifice plates. The preferred installation position for flow nozzles is horizontal, but they can be installed in any position. However, a vertical downflow position is preferred for wet steam or for gases and liquids with suspended solids. In general, upstream and downstream piping requirements are similar to those required for orifices. Because of the width, nozzles installed between flanges are difficult to remove. Common practice is to provide a flange in the downstream piping to allow the nozzle to be removed as part of a spool section for inspection at regular intervals. Sometimes, inspection openings are placed just upstream of the nozzle so that frequent inspections can be made without removing the nozzle from service.

Flow nozzles are particularly suited for measurement of steam flow and other high-velocity fluids, fluids with some solids, wet gases, and similar materials. Because the exact contour is not critical, the flow nozzle can be expected to retain good calibration for a long time under erosion or other hostile conditions. Because of its streamlined contour, it tends to sweep solids or moisture through the throat and is far superior to orifice plates in these services. Because tap geometry and contour is critical to maintaining calibration, it is not recommended to use flow nozzles on slurries or dirty fluids.

A flow nozzle will pass about 60% more flow than an orifice plate of the same diameter and differential pressure. It also has the advantage of operating acceptably over a wide beta ratio range of 0.2 to 0.8. For the same flow and differential pressure, the flow nozzle has a similar but slightly lower pressure loss than an orifice plate. This becomes apparent when it is recognized that the area of the throat and the velocity in the throat of a flow nozzle must be approximately the same as the area of flow and velocity at the *vena contracta* following an orifice so as to develop the same differential pressure from the same flow. The slightly lower pressure loss of the flow nozzle is due to its streamlined entrance.

On the other hand, because the ASME flow nozzle does not utilize a recovery cone, the permanent head loss can still be as much as 40% of the differential pressure (Figure 2.29f). In an effort to reduce these losses, particularly in applications for PTC-6 testing of turbines, a recovery cone may be added. In this design, the permanent head losses can be substantially reduced. The actual amount of reduction should be determined through testing.

Although nozzles should be used at Reynolds numbers of 50,000 or above, data are available for Re down to 6000, so it is possible to use nozzles with more viscous fluids. Still, work published by the ASME Fluid Research Committee suggests that the most stable flow coefficients are seen at *throat Reynolds number* of 1×10^6. For throat Reynolds numbers below 1×10^5, the shift in flow coefficient can be as high as 6%.

Flow nozzles have very high coefficients of discharge, typically 0.99 or greater. Using a typical value of 0.993, approximate flow rates can be calculated from a working equation,

$$W = 358 d^2 \sqrt{\frac{h\rho}{1-\beta^4}} \qquad \textbf{2.29(3)}$$

and, for approximate flow nozzle design,

$$\beta = \frac{1}{\sqrt[4]{1+\dfrac{128{,}000 h\rho D^4}{W^2}}} \qquad \textbf{2.29(4)}$$

CRITICAL-VELOCITY VENTURI NOZZLES

One of the most accurate ways to measure gas flow is to cause "choked" flow (sonic velocity flow) through a venturi nozzle. Critical-velocity venturi nozzles are also used as secondary flow standards in calibrating other flowmeters. The nozzle can

© 2003 by Béla Lipták

be the ASME long-radius, elliptical inlet, wall-tap nozzle; the ISA 1932 nozzle; or the ASME throat-tap nozzle used in steam turbine testing.

One of the highest rangeability and most accurate gas flowmeters has been devised by combining the sonic venturi nozzles with the digital control valve (Figure 2.1j).

ACCURACY

Operation and calibration of venturi tubes over a period of many years has resulted in extensive documentation. As a result, most manufacturers will guarantee a standard design inaccuracy of ±0.75% of actual flow. This can be reduced to ±0.25% by calibration at a recognized hydraulics laboratory. Modern manufacturing techniques have led to predictable discharge coefficients and a repeatability of ±0.2% for venturi tubes of the same size and design.

For very small (<4 in. or 100 mm) and very large (>32 in. or 813 mm) venturi tubes, and for very high (>2,000,000) or very low (<150,000) Reynolds numbers, flow calculations for venturi tubes have about a 50% greater uncertainty than a corresponding sharp-edged orifice plate. However, fluid flow calibration, particularly when made under conditions closely approximating service values, can provide a coefficient with practically the same accuracy as that of the calibration facilities.

The error contribution of the d/p-generating flow sensor is defined as the uncertainty tolerance of the flow coefficient. The inaccuracy values can range from as low as 0.25% of rate for calibrated units to 1.5% of rate for uncalibrated welded units and can be expected to hold true only for a limited range of Reynolds numbers (see Figure 2.1f) and beta ratios.

The overall performance of the total flow measurement system therefore will be the sum of the transmitter and sensor errors. This sum will hold true only over the flow range between the maximum flow and the flow rate corresponding to the minimum Reynolds number for which the sensor error is still guaranteed. This minimum Reynolds number for venturies and flow tubes is around 100,000, and for flow nozzles it is over 1,000,000. Consequently, the rangeability of these devices, if defined in terms of actual flow error, can be rather low.

DIFFERENTIAL PRESSURE MEASUREMENT

The differential pressure generated by these primary devices (venturi, flow tubes, and flow nozzles) can be measured by manometers, gauges, and electronic pressure transmitters. The accuracy of analog electronic transmitters varies from ±0.1 to ±0.5% of calibrated span. When square-root circuitry is added, there is usually a ±0.05% increase in the error. Microprocessor-based ("smart") transmitters have an inherent accuracy of ±0.1% of calibrated span or less, regardless of whether the square-root function is used.

Overall accuracy of the entire flowmeter system is a function of the transmitter and other instruments in the loop. The most common method for determining accuracy is to root mean square (RMS) the errors to calculate the total error. Let's look at an example with only the primary device and an electronic transmitter. Recognize that transmitter accuracy is specified as a percent of calibrated span. Thus, at 25% of span, the error will be four times the error at full scale. The venturi, flow tube, and flow nozzle accuracy is specified as a percent of rate. Thus, the sensor accuracy is the same throughout its usable range.

Assume the venturi and the electronic transmitter are both set up such that there is a 100-in. H_2O differential pressure at full scale flow. Assume that the venturi has an accuracy of 0.75% of rate, and the transmitter has an accuracy of 0.25% of calibrated span. At full-scale flow, the total RMS uncertainty will be $\sqrt{(.75)^2 + (.25)^2} = 0.79\%$. At 50% flow, the total RMS uncertainty will be $\sqrt{(.75)^2 + (.50)^2} = 0.90\%$. At 25% of flow, the total RMS uncertainty will be $\sqrt{(.75)^2 + (.50)^2} = 1.25\%$. At 10% flow, the total RMS uncertainty will be $\sqrt{(.75)^2 + (2.5)^2} = 2.61\%$. Therefore, the transmitter can contribute significantly to the total error of the system when used over a wide range, even though the primary device maintains its accuracy over that range.

Some manufacturers of smart transmitters have routines that reduce the full-scale value of the transmitter as the differential pressure signal from the primary decreases so as to increase the total accuracy. This requires that the transmitter communicate digitally to the receiver so the reduced full scale and the measured differential pressure can be transmitted to the receiver. The total error in a flow measurement is the sum of two errors: that of the sensor and that of the transmitting or readout device. The error contribution of the best d/p transmitters is about 0.1% of span. To cover a flow range of 10:1, d/p range of 100:1 needs to be covered, which requires either an extremely wide-range d/p cell or, more likely, two d/p transmitters (a high-span and a low-span one). If such a dual-transmitter configuration is used, and if the transmitters are switched as needed, the actual error contribution of the transmitter can be limited to 1% of actual flow.

CONCLUSION

The main limitation of venturi tubes is cost, both of the tube itself and often of the piping layout required for the length necessary in the larger sizes. However, the energy-cost savings attributable to venturi tubes' higher pressure recovery and reduced pressure loss usually justifies their use in larger pipes.

© 2003 by Béla Lipták

Another limitation is the relatively high minimum Reynolds number required to maintain accuracy. For venturies and flow tubes, this minimum is around 100,000, whereas, for flow nozzles, it is greater than 1,000,000. Naturally, correction data are available for Reynolds numbers below these limits, but measurement performance will suffer.

Cavitation can also be a problem. At the high flow velocities (corresponding to the required high Reynolds numbers) at the *vena contracta*, the static pressure will be low. When it drops below the vapor pressure of the flowing fluid, cavitation occurs. This, if present, will destroy the throat section of the tube, as no material can stand up to cavitation. The possible ways to eliminate cavitation include relocating the meter to a point in the process where the pressure is higher and the temperature is lower, reducing the pressure drop across the sensor, and replacing the sensor with one that has less pressure recovery.

As a result of their construction, venturies, flow tubes, and flow nozzles are relatively difficult to inspect. This problem can be solved by providing an inspection port on the outlet cone near the throat section. This can be an important factor when metering dirty (erosive) gases, slurries, or corrosive fluids. On dirty services where the pressure ports are likely to plug, the pressure taps on the flow tube can be filled with chemical seals having stainless-steel diaphragms that are installed flush with the tube interior (Figure 2.29l).

The main advantages of these sensors include their relatively high accuracy, good rangeability (on high Reynolds number applications), and energy-conserving high-pressure recovery. For these reasons, in higher-velocity flows and in larger pipelines (and ducts), the venturies are still favored by many users in spite of their high costs. Their hydraulic shape also contributes to greater dimensional reliability and therefore to better flow-coefficient stability than that of the orifice-type sensors, which depend on the sharp edge of the orifice for their flow coefficient.

The accuracy of a flow sensor is defined as the uncertainty tolerance of the flow coefficient. Accuracy can be improved by calibration. Table 2.29m gives some accuracy data in percentage of actual flow as reported by various manufacturers. These values are likely to hold true only for the stated ranges of beta ratios and Reynolds numbers, and they do not include the added error of the readout device or d/p transmitter.

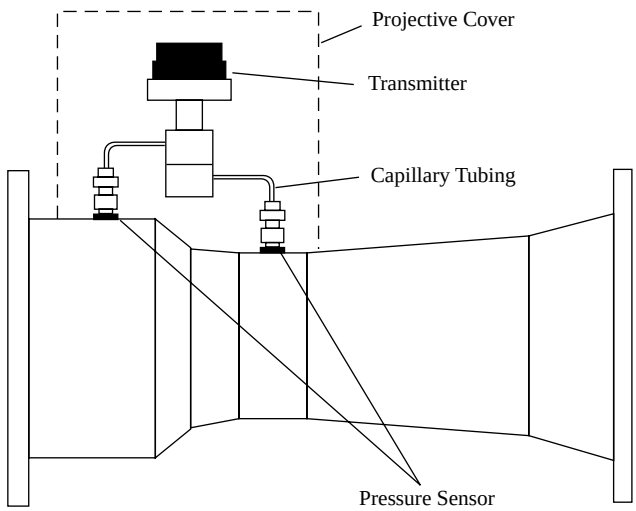

FIG. 2.29l
A variable capacitance flow transmitter can be mounted integrally to the flow tube and provided with chemical seals for protection against plugging or corrosion. (Courtesy of BIF Inc.)

TABLE 2.29m
Venturi, Flow Tube, and Flow Nozzle Inaccuracies (Errors) in Percent of Actual Flow for Various Ranges of Beta Ratios and Reynolds Numbers

Flow Sensor		*Line size, inches (1 in. = 25.4 mm)*	*Beta Ratio*	*Pipe Reynolds Number Range for Stated Accuracy*	*Inaccuracy, Percent of Actual Flow*
Herschel standard	Cast[1]	4–32	0.30–0.75	2×10^5 to 1×10^6	±0.75%
	Welded	8–48	0.40–0.70	2×10^5 to 2×10^6	±1.5%
Proprietary true venturi	Cast[2]	2–96	0.30–0.75	8×10^4 to 8×10^6	±0.5%
	Welded	1–120	0.25–0.80	8×10^4 to 8×10^6	±1.0%
Proprietary flow tube	Cast[3]	3–48	0.35–0.85	8×10^4 to 1×10^6	±1.0%
ASME flow nozzles[4]		1–48	0.20–0.80	7×10^6 to 4×10^7	±1.0%

[1]No longer manufactured because of long laying length and high cost.
[2]Badger Meter Inc.; BIF Products; Fluidic Techniques Inc.; Primary Flow Signal Inc.; Tri-Flow Inc.
[3]ABB Instrumentation; Badger Meter Inc.; BIF Products; Preso Industries.
[4]BIF Products; Daniel Measurement and Control.

© 2003 by Béla Lipták

Reference

1. Bean, H. S., Ed., *Fluid Meters—Their Theory and Application,* 6th ed., ASME Research Committee on Fluid Meters, New York, 1971.

Bibliography

ANSI/ASME MFC, Differential Producers Used for the Measurement of Fluid Flow in Pipes (Orifice, Nozzle, Venturi), ANSI, New York, December 1983.

ASME MFC-3M, *Measurement of Fluid Flow in Pipes Using Orifice, Nozzle, and Venturi,* Latest edition.

Boyes, W. H., Pumps and flowmeters hand in hand, *Flow Control,* September 2001.

Cushing, M., The future of flow measurement, *Flow Control,* January 2000.

Eren, H., Flowmeters, in *Survey of Instrumentation and Measurement,* S.A. Dyer, Ed., John Wiley & Sons, New York, 2001, 568–580.

Halmi, D., Metering performance investigation and substantiation of the Universal Venturi Tube, *J. Fluids Eng.,* February 1974.

Herschel, C., The venturi water meter, *Trans. Am. Soc. Civil Eng.,* 17, 228, 1987.

ISO/TC 30231 E. Draft ISO Recommendation No. 1–157, November 1966.

ISO Standard R781, Measurement of fluid flow by means of Venturi, ISO, Geneva, 1968.

ISO 5167, *Measurement of Fluid Flow by Means of Pressure Differential Devices,* Latest edition.

Jones, J. T., Field experience with sonic nozzle, *AGA Operating Section Proc.,* AGA, Arlington, VA, 315–319, 1976.

Kochen, G., Smith, D. J. M. and Umbach, H., Installation effects on venturi tube flowmeters, *InTech,* October 1989.

Kopp, J. G., How to get accuracy you expect from flowmeters, *Instrum. Control Syst.,* September 1989.

Lipták, B. G., Flow measurement trends, *Control,* June 2000.

Miller, R. W., *Flow Measurement Engineering Handbook,* 3rd ed., McGraw-Hill, New York, 1996.

Rudbäck, S., Optimization of orifice plates, venturis, and nozzles, *Meas. Control,* June 1991.

Shell Flow Meter Engineering Handbook, Royal Dutch/Shell Group, Delft, The Netherlands, Waltman Publishing Co., 1968.

Spink, L. K., *Principles and Practice of Flow Engineering,* 9th ed., The Foxboro Co., Invensys Systems, Inc., Foxboro, MA, 1967.

Spitzer, D. W., *Flow Measurement Practical Guide Series,* 2nd ed., ISA Press, Research Triangle Park, NC, 2001.

© 2003 by Béla Lipták

2.30 Vortex and Fluidic Flowmeters

J. G. KOPP (1969) **D. J. LOMAS** (1982) **B. G. LIPTÁK** (1995)
W. H. BOYES (2003)

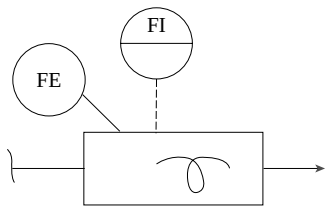

Flow Sheet Symbol

Types	A. Vortex B. Fluidic-shedding Coanda effect C. Vortex precession (Swirlmeter™)
Services	A. Gas, steam, reasonably clean liquids B. Gas, reasonably clean liquids C. Gas, steam, reasonably clean liquids
Size Ranges Available	A. 0.5 to 12 in. (13 to 300 mm), also probes B. 0.5 to 4 in. (13 to 100 mm); up to 12 in. (300 mm) in bypass versions C. 0.5 to 12 in. (13 to 300 mm)
Detectable Flows	A. Water, 2 to 10,000 GPM (8 l/min to 40 m^3/hr); air, 3 to 12,000 SCFM (0.3 to 1100 SCMM); steam (D&S at 150 PSIG [10.4 bars]), 25 to 250,000 lbm/hr (11 to 113,600 kg/hr) B. Water, 0.033 to 1000 GPM (0.125 to 4000 l/min); fluids, to 80 cSt C. Water, 2 to 10,000 GPM (8 l/min to 40 m^3/hr); air, 3 to 12,000 SCFM (0.3 to 1100 SCMM); steam (D&S at 150 PSIG [10.4 bars]), 25 to 250,000 l/hr (11 to 113,600 kg/hr)
Flow Velocity Range	A and C. Liquids, 1 to 33 ft/s (0.3 to 10 m/s) Gas and steam, 20 to 262 ft/s (6 to 80 m/s)
Minimum Reynolds Numbers	A. Below Re of 8000 to 10,000, meters do not function at all; for best performance, Re should exceed 20,000 in sizes under 4 in. (100 mm) and exceed 40,000 in sizes above 4 in. B. Re = 3000; some models claim Re = 400 at specified inaccuracy, with reading down to Re = 75. C. Same as A.
Output Signals	A, B, C linear pulses or analog
Design Pressure	A. 2000 PSIG (138 bars) B. 600 PSIG (41 bars) below 2 in. (50 mm); 150 PSIG (10.3 bars) above 2 in. C. 2000 PSIG (138 bars)
Design Temperature	A. –330 to 750°F (–201 to 400°C) B. 0 to 250°F (–18 to 120°C) C. –330 to 750°F (–201 to 400°C)
Materials of Construction	A. Mostly stainless steel, some in plastic B. Cast bronze, plastic, stainless, and some specialty metals C. Mostly stainless steel, specialty alloys available
Rangeability	A. Reynolds number at maximum flow divided by minimum Re of 20,000 or more B. Reynolds number at maximum flow divided by minimum Re of 3000 (400 for some models) C. Reynolds number at maximum flow divided by minimum Re of 20,000 or more

© 2003 by Béla Lipták

Inaccuracy

A. 0.5 to 1% of rate for liquids, 1 to 1.5% of rate for gases and steam with pulse outputs; for analog outputs, add 0.1% of full scale
B. 1 to 2% of actual flow for liquids, 1% of rate for gases claimed
C. 0.5 to 1% of rate for liquids, 1 to 1.5% of rate for gases and steam with pulse outputs; for analog outputs, add 0.1% of full scale

Cost

A. Plastic and probe units cost between $250 and $1500; stainless steel units in small sizes cost about $2500; insertion types cost about $3000
B. Small versions for domestic water or heat metering cost between $50 and $125; larger versions including bypass meters cost between $300 and $1500
C. Stainless-steel units in small sizes cost about $2500, specialty materials are extra

Partial List of Suppliers

A. Aaliant Div. of Venture Measurement (www.venturemeas.com)
ABB Instrumentation (www.abb.com)
Asahi America (www.asahi-america.com)
Bopp & Reuther (Heinrichs)
Daitron (Saginomiya)
Delta Controls (www.deltacontrols.com)
Eastech Badger (www.eastechbadger.com)
EMCO (www.emcoflow.com)
Endress+Hauser Inc. (www.endress.com)
The Foxboro Co. (www.foxboro.com)
GF Signet (www.gfsignet.com)
Hangzhou Zhenhua Meter Factory
Honeywell (www.honeywell.com)
J-Tec Associates (www.j-tecassociates.com)
Krohne America (www.krohne.com)
Metron Technology (www.metrontechnology.com)
Nano-Master (www.nanomaster.com)
Rosemount (now Emerson Process Measurement) (www.rosemount.com)
Sparling (www.sparlinginstruments.com)
Spirax Sarco Inc. (www.spiraxsarco.com)
Tokyo Keiso (www.tokyokeiso.co.jp/english/index-e.htm)
Vortek
Yamatake (www.yamatake.co.jp)
Yokogawa (www.yca.com)
Yuyao Yinhuan Flowmeter Instrument Co.
Zheijiang Tancy Instrument Co.
B. Actaris Metering Systems (formerly Schlumberger) (www.actaris.com)
Fluid Inventor AB (www.fluidinventor.se)
Severn Trent Services (formerly Fusion Meter) (www.severntrentservices.com)
Sontex BV (www.sontex.com)
C. ABB Instrumentation (www.abb.com)

This section is devoted mainly to the vortex-shedding flowmeter and its variations, including the earlier designs of vortex-precession (swirl) meters and the recent combination designs of vortex bypass elements around orifices. Included in this category of devices are oscillating fluidic flowmeters using the Coanda effect.

THE VORTEX SHEDDING PHENOMENON

It was Tódor von Kármán who discovered that, when an obstruction (a nonstreamlined object) is placed in the path of a flowing stream, the fluid is unable to remain attached to the object on its downstream sides and will alternately separate (shed) from one side and then the other. The slow-moving fluid in the boundary layer on the bluff body becomes detached on the downstream side and rolls into eddies and vortices (Figure 2.30a). Von Kármán also noticed that the distance between the shed vortices *is constant*, regardless of flow velocity. Stated in terms of a flag fluttering in the wind, what von Kármán discovered is that the intervals between vortices (1) (or the wavelength of fluttering) is *constant* and is only a function of the diameter of the flag pole (d). Therefore, the faster the wind, the faster the vortices are formed, and the faster the flag flutters as a consequence—*but without changing its wavelength.*

Later, Strouhal determined that, as long as the Reynolds number of the flowing stream is between 20,000 and 7,000,000, the ratio between the shedder width (d) and the vortex interval (1) is 0.17. This number is called the *Strouhal number.*

© 2003 by Béla Lipták

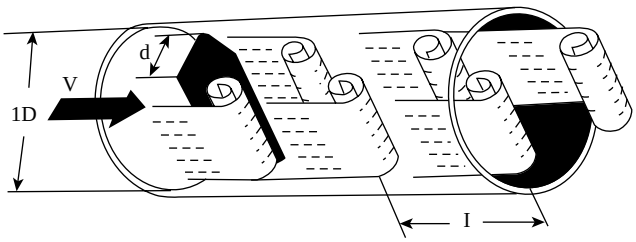

FIG. 2.30a
The distance between the Kármán vortices (l) is only a function of the width of the obstruction (d), and therefore the number of vortices per unit of time gives flow velocity (V).

Therefore, if one knows the vortex shedder width (d) and has a detector that is sensitive enough to count the vortices and determine the vortex frequency (f), one can measure the flowing velocity of any substances as

$$\text{flow velocity} = (f \times d)/(0.17) = kfd \qquad \textbf{2.30(1)}$$

In building a flowmeter based on Kármán's principle, the manufacturer usually selects an obstruction width (d) that is one-quarter of the pipe diameter (ID). As long as the obstruction is not eroded or coated, as long as the pipe Reynolds number is high enough to produce vortices, and as long as the detector is sensitive enough to detect these vortices (for gases such as hydrogen, the forces produced by the vortices are very small), the result is a flowmeter that is sensitive to flow velocity and insensitive to the nature of the flowing media (liquid, gas, steam), the density, the viscosity, the temperature, the pressure, and any other properties.

THE DETECTOR

As a vortex is shed from one side of the bluff body, the fluid velocity on that side increases, and the pressure decreases. On the opposite side, the velocity decreases, and the pressure increases, thus causing a net pressure change across the bluff body. The entire effect is then reversed as the next vortex is shed from the opposite side. Consequently, the velocity and pressure distribution adjacent to the bluff body change at the same frequency as the vortex shedding frequency changes.

Various detectors can be used to measure one of the following:

1. The oscillating flow across the face of the bluff body
2. The oscillating pressure difference across the sides of the bluff body
3. A flow through a passage drilled through the bluff body
4. The oscillating flow or pressure at the rear of the bluff body
5. The presence of free vortices in the downstream to the bluff body

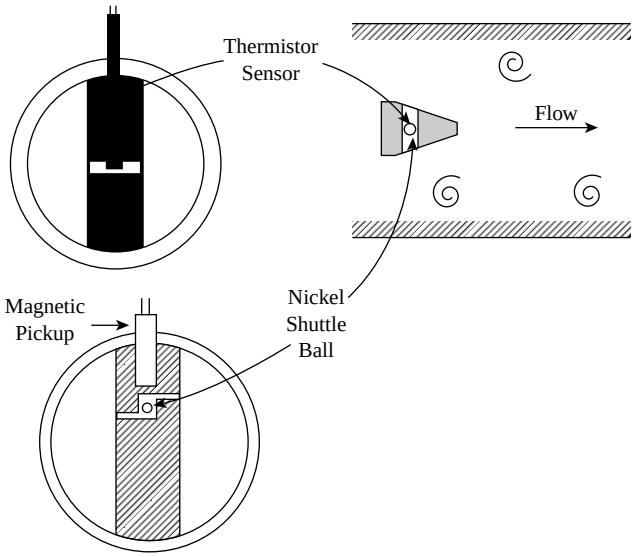

FIG. 2.30b
Shuttle-ball and shuttle-flow-type early vortex flowmeter detectors.

A flow-sensitive detector can be either a heated thermistor element or a spherical magnetic shuttle (with the movement of the shuttle measured inductively). Detectors that are sensitive to pressure use metal diaphragms or vanes. Pressure exerted on diaphragms can be converted into a variable capacitance or a variable strain on a piezoresistive, piezoelectric, or inductive sensor. Pressure exerted on vanes can similarly be converted into an electrical signal through any of the aforementioned sensors. Alternatively, the velocity components in the free vortices downstream of the bluff body can be used to modulate an ultrasonic beam diametrically traversing the meter housing. Depending on the characteristics of the sensing system, the flowmeter will be suitable for liquid, gas, or both.

The earliest detector designs were highly sensitive to plugging and required frequent maintenance (Figure 2.30b). These devices were later replaced by units that could not plug and were of solid-state design (Figure 2.30c). The majority of these designs are still marketed and are well received by users who are not concerned about quick and convenient access to, and replacement of, the detector or about the reliability and sensitivity of heat transfer or ultrasonic detectors. Still, the trend seems to be toward detectors that are modular, inexpensive, and interchangeable so they can be quickly replaced when necessary. Several vortex flowmeter detectors on today's market can be replaced easily (Figure 2.30d). In this design, the detector is a liquid-filled, double-faced diaphragm capsule with a piezoelectric crystal in the center that detects the vortex-produced pressure changes as they are transmitted through the filling liquid.

Other design modifications aim at compensating for background noise by using two detectors, one of which is exposed to vortex forces and the other is not, and using their difference as the measurement signal (Figure 2.30e). Other design

© 2003 by Béla Lipták

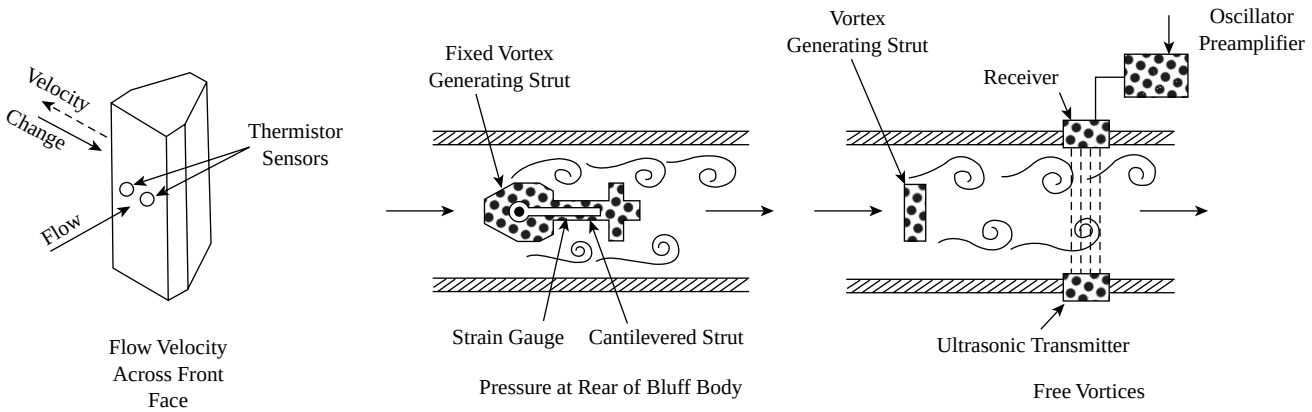

FIG. 2.30c
Solid-state vortex flowmeter designs with limited accessibility to their sensors.

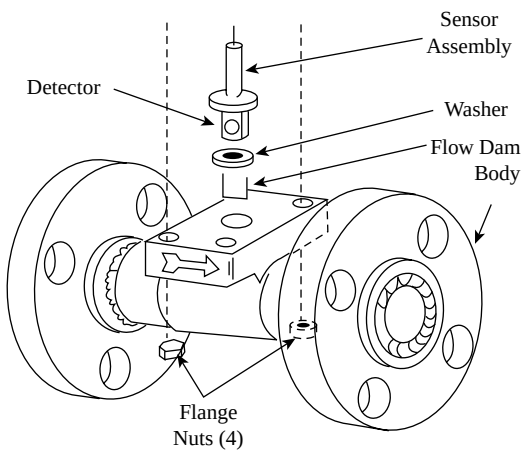

FIG. 2.30d
Piezoelectric capsule detector element is removable from flow element. (Courtesy of The Foxboro Co.)

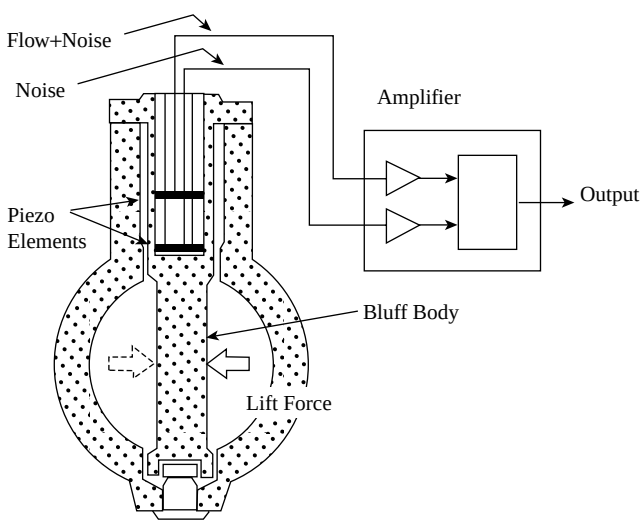

FIG. 2.30e
Dual detector serves noise compensation. (Courtesy of Johnson Yokogawa Corp. of America.)

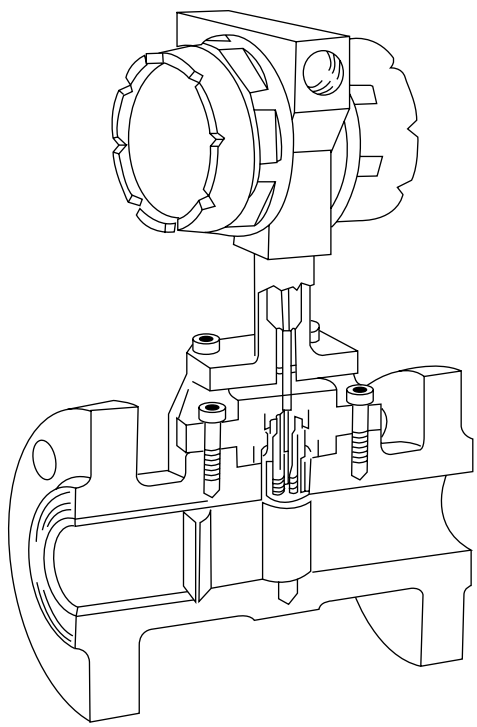

FIG. 2.30f
Separating the rugged obstruction and the detector allows the detector to be much more sensitive to the pressure waves. The increases in the forces detected allows for the use of more rugged (less sensitive and therefore less fragile) sensors. (Courtesy of EMC Co.)

modifications aim at amplifying the signal generated by low-energy vortices, such as by low-density gases. One approach is to use two detector elements (capacitance or piezoelectric) and measure the difference between their signals. This tends to amplify the detector output because, as the vortices emerge on alternate sides of the flow element, the two detectors sense the forces acting on the two different sides of the element. Still another method of amplifying the vortex forces is by physically separating the vortex shedding element and the vortex force detector (Figure 2.30f). If the vortex forces are

© 2003 by Béla Lipták

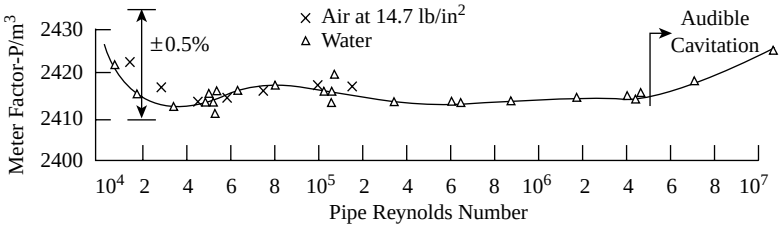

FIG. 2.30g
Typical calibration curves for a 3 in. (76 mm) vortex meter showing the close correlation between water and atmospheric air calibrations.

amplified, the force detectors can be made less sensitive and therefore more rugged and reliable.

The types of detectors in use as of this writing are listed below:

- mechanical
- thermal
- ultrasonic
- strain gauge
- capacitance
- piezoelectric

It would seem that the piezoelectric designs (particularly their dual or differential versions) dominate the market, but other designs claim superior performance under certain operating conditions. The manufacturers of the capacitance design, for example, claim superior immunity to pipe vibration effects.

The fundamental meter output is a frequency signal in all cases, which can be fed directly into digital electronic units for totalization and/or preset batching, into computers, or into data loggers. The frequency signal also can be converted into a conventional 4- to 20-mA DC analog signal for flow rate indication, recording, and control purposes. Most meters are available in either a standard form or in a design to satisfy Division 1 explosion-proof area requirements.

Features

The vortex-shedding meter provides a linear digital (or analog) output signal *without* the use of separate transmitters or converters, simplifying equipment installation. Meter accuracy is good over a potentially wide flow range, although this range depends on operating conditions. The shedding frequency is a function of the dimensions of the bluff body and, being a natural phenomenon, ensures good long-term stability of calibration and repeatability of better than ±0.15% of rate. There is no drift, because this is a frequency system.

The meter does not have any moving or wearing components, which provides improved reliability and reduced maintenance. Maintenance is further reduced by the fact that there are no valves or manifolds to cause leakage problems. The absence of manifolds and valves results in a particularly safe installation, an important consideration when the process fluid is hazardous or toxic.

If the sensor utilized is sufficiently sensitive, the same vortex-shedding meter can be used on both gas and liquid. In addition, the calibration of the meter is virtually independent of the operating conditions (viscosity, density, pressure, temperature, and so on) whether the meter is being used on gas or liquid (see Figure 2.30g).

The vortex-shedding meter also offers a low installed cost, particularly in pipe sizes below 6 in. (152 mm) diameter, which compares competitively with the installed cost of an orifice plate and differential pressure transmitter.

The limitations include meter size range. Meters below 0.5 in. (12 mm) diameter are not practical, and meters above 12 in. (30.0 mm) have limited application as a result of their high cost (compared to an orifice system) and their limited output pulse resolution. The number of pulses generated per unit volume decreases on a cube law with increasing pipe diameter. Consequently, a 24-in. (610-mm) diameter vortex-shedding meter with a typical blockage ratio of 0.3 would have a full-scale frequency output of only approximately 5 Hz at 10 ft/s (3 m/s) fluid velocity.

Selection and Sizing

As the first step in the selection process, the operating conditions (process fluid temperature, ambient temperature, line pressure, and so on) should be compared with the meter specification. The meter wetted materials (including bonding agents) and sensors should then be checked for compatibility with the process fluid with regard to both chemical attack and safety. With oxygen, for example, nonferrous materials should be used because of the reactive nature of oxygen. Applications in which there are large concentrations of solids, two-phase flow, or pulsating flow should be avoided or approached with extreme caution. The meter minimum and maximum flow rates for the given application should then be established. (See Figures 2.30h and 2.30i, and Table 2.30j.)

A typical performance curve for a vortex-shedding flowmeter is shown in Figure 2.30g. The meter minimum flow rate is established by a Reynolds number of 10,000 to 10,500, the fluid density, and a minimum acceptable shedding frequency for the electronics. The maximum flow rate is governed by the meter pressure loss (typically, two velocity heads), the onset of cavitation with liquids, and sonic velocity flow (choking) with gases. Consequently, the flow range for

© 2003 by Béla Lipták

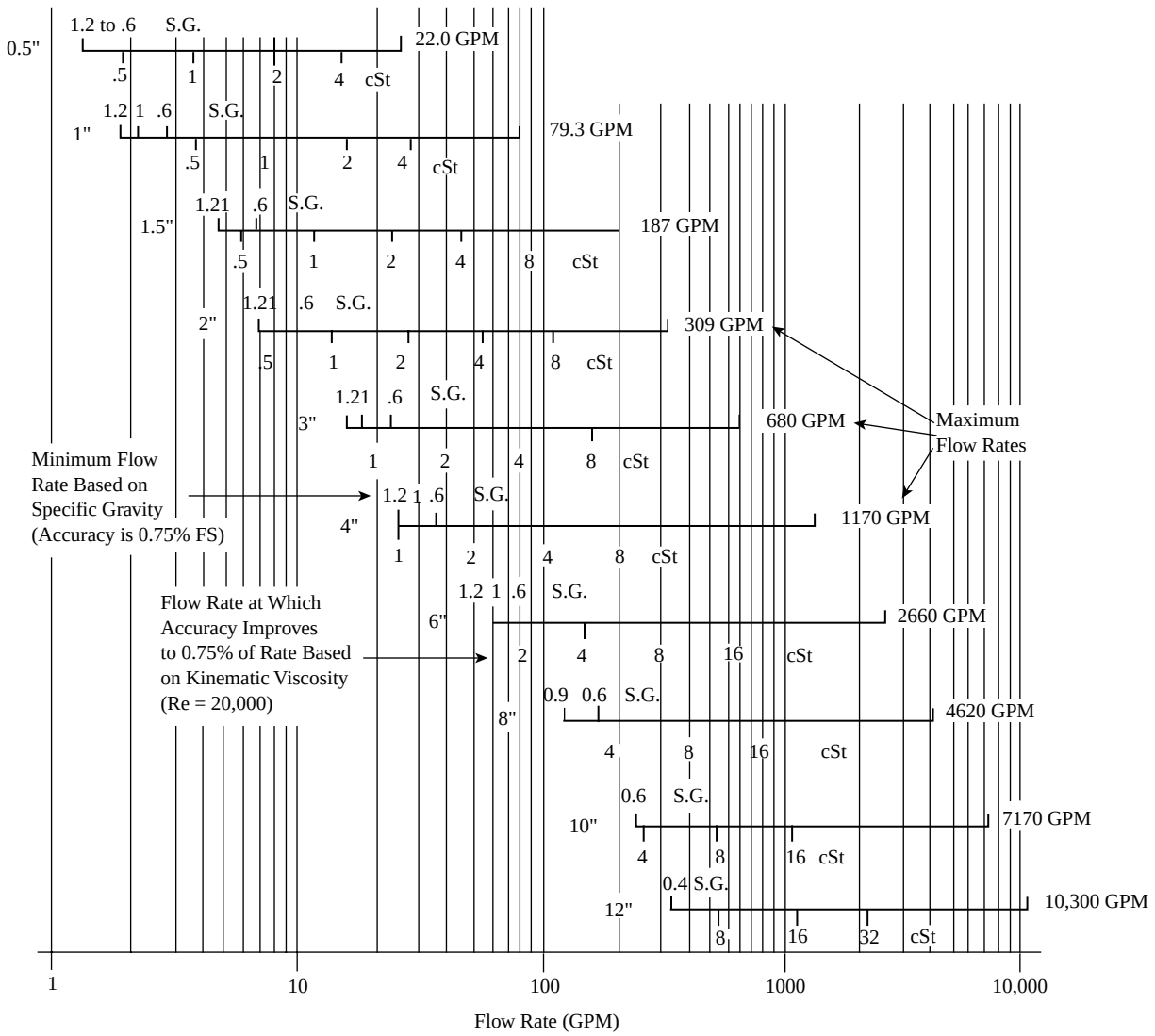

FIG. 2.30h

Sizing chart for liquid flow measurement. Note that minimum flows are limited by both specific gravity (water SG = 1) and viscosity limitations. (To convert to metric units use: 1 in. = 25.4 mm, 1 GPM = 3.78 lpm). (Courtesy of Endress+Hauser Inc.)

any application depends totally on the operating fluid viscosity, density, and vapor pressure, and the application's maximum flow rate and line pressure. On low-viscosity products such as water, gasoline, and liquid ammonia, and with an application maximum velocity of 15 ft/s (4.6 m/s), vortex-shedding meters can have a rangeability of about 20:1 with a pressure loss of approximately 4 PSIG (27.4 kPa).

The meter's good (*of-rate*) accuracy and digital linear output signal make its application over wide flow ranges a practical proposition. The rangeability declines proportionally with increases in viscosity, decreases in density, and reductions in the maximum flow velocity of the process. Vortex-shedding meters are therefore *unsuitable* for use on high-viscosity liquids.

For liquid applications, it is necessary to verify that sufficient line pressure exists to prevent cavitation in the vortex meter. The maximum pressure drop in a vortex-shedding meter is in the region of the bluff body, and there is a considerable pressure recovery by the meter outlet. Upstream line pressure requirements vary from one meter design to another, but a typical minimum acceptable upstream pressure requirement (to protect against cavitation) is given by the expression,

$$\text{Upstream pressure} \geq 1.3(\text{vapor pressure} + 2.5 \times \text{net pressure loss across the meter})$$

Cavitation conditions must be avoided at all costs, as no material can stand up to the damage caused by cavitation. One might approximate the minimum upstream pressure required to avoid cavitation (P_{min}) on the basis of the maximum velocity expected in the pipeline (V_{max}) as follows:

$$P_{min} = (1.3)P_v + (2.5)V_{max}{}^2/g \qquad \textbf{2.30(2)}$$

© 2003 by Béla Lipták

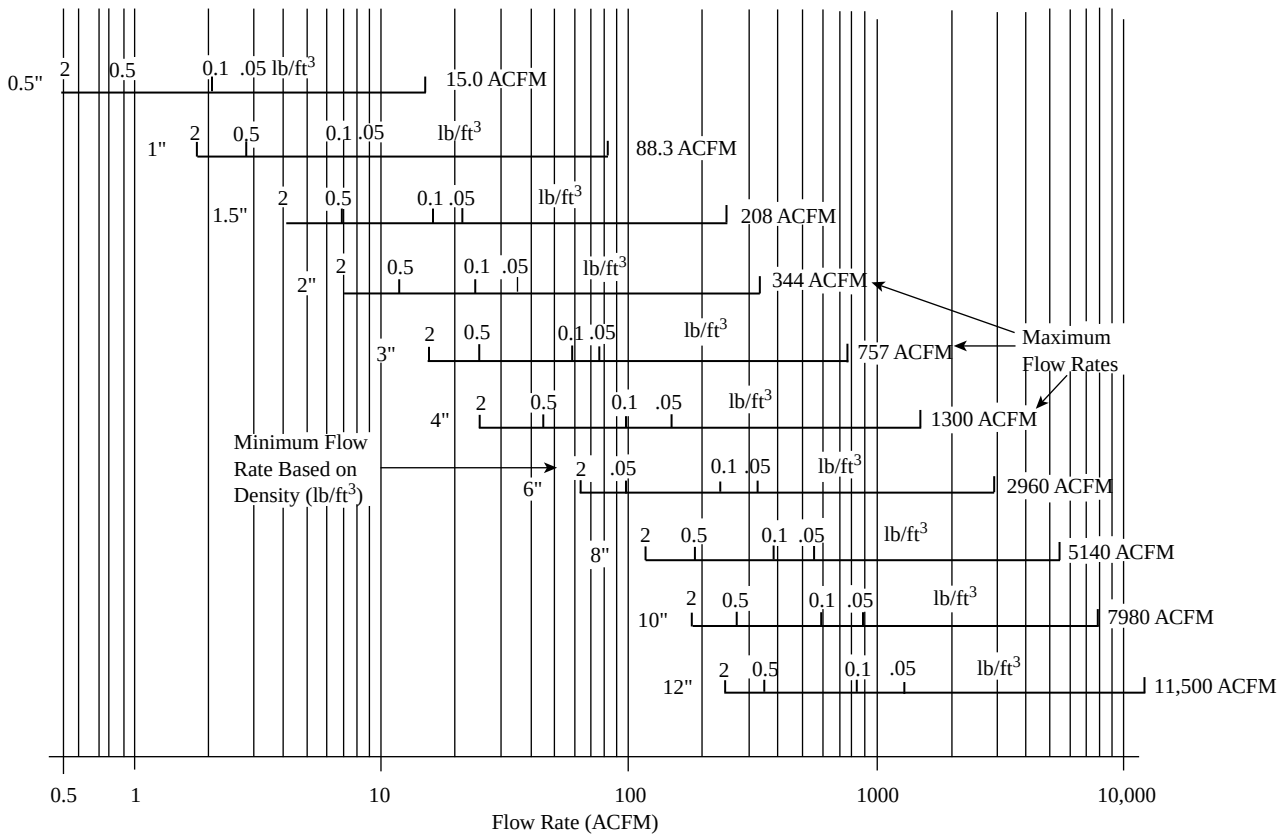

FIG. 2.30i

Sizing chart for gas and vapor flow detection: For extremely dense gases, the maximum flow may be less than shown. Gases with extremely low densities (e.g., hydrogen, helium) may not be measurable. Note that minimum flows are a function of flowing density. To convert to metric units use: 1 in. = 25.4 mm, 1 ACFM = 0.02832 ACMM, and 1 lb/ft^3 = 16 kg/m^3. (Courtesy of Endress+Hauser Inc.)

where

P_{min} = minimum required upstream pressure in feet of liquid head

P_v = vapor pressure of the flowing liquid at maximum operating temperature in feet of liquid head

V_{max} = maximum anticipated flowing velocity in feet per second

g = gravitational acceleration constant of 32.2 having the units square feet per second

Vortex-shedding flowmeters cannot survive cavitation, but they can survive episodes of *flashing* (i.e., when some of the incoming liquid stream is permanently vaporized in the flowmeter). If the liquid *gases*, the vortex-shedding flowmeter will not be mechanically damaged (although the meter output will be seriously in error).

Installation Requirements

Vortex-shedding meters require a fully developed flow profile. The length of upstream pipework necessary to ensure satisfactory approach conditions depends on the specific design of meter, the type of upstream disturbance present, and the level of accuracy required. Typical upstream and downstream pipework requirements for a variety of disturbances are given in Figure 2.30k.

Where there is a severe upstream disturbance, the resulting long, straight lengths of pipe can be reduced by fitting a radial vane or bundle-of-tubes flow-straightening element in the upstream pipework. Wherever possible, however, the meter should be installed upstream of any severe source of disturbance such as regulating control valves. The downstream straight pipe requirement is five times nominal meter diameter. The meter can be installed in any attitude (horizontal or vertical), but it is not suitable for reverse flowmetering.

Other instrument connections (pressure, temperature) all should be located downstream of the flowmeter and more than five diameters away from it. The flowmeter should be the same size as (or smaller than) the pipeline, but never larger. The unit can be insulated for cryogenic or high-temperature services and can be provided with extension bonnets. It should be installed in self-draining low points in the piping or in vertical upward flows to keep the meter flooded and to avoid air bubbles and standing liquid pools. Block and bypass valves should be provided if the meter is

© 2003 by Béla Lipták

TABLE 2.30j

Sizing for Steam Flow in Lb/m/Hr Units†*

Meter Size (in.)		Steam Pressure (PSIG)																		
		10	*20*	*30*	*40*	*50*	*60*	*80*	*100*	*150*	*200*	*250*	*300*	*350*	*400*	*500*	*600*	*700*	*800*	*900*
0.5	min	10	12	13	15	16	17	19	21	25	28	31	34	36	39	40	46	51	57	63
	max	55	75	95	115	134	154	193	231	326	421	516	610	707	803	997	1197	1401	1611	1826
1	min	30	36	40	44	48	51	57	63	75	85	94	102	110	117	130	143	154	166	176
	max	322	442	560	677	792	907	1140	1360	1920	2490	3040	3600	4170	4740	5880	6440	6970	7470	7950
1.5	min	72	84	95	104	113	121	135	148	176	200	221	241	259	276	308	337	365	391	417
	max	761	1040	1320	1600	1870	2150	2690	3220	4550	5880	7190	8510	9850	11,200	13,900	15,200	16,500	17,700	18,800
2	min	119	139	156	172	186	199	223	244	290	330	365	397	427	455	507	556	601	645	686
	max	1250	1720	2180	2640	3090	3530	4420	5310	7490	9680	11,900	14,000	16,200	18,500	22,900	25,100	27,100	29,100	31,000
3	min	261	306	344	379	410	439	491	537	639	726	803	873	940	1000	1120	1220	1320	1420	1510
	max	2760	3790	4800	5800	6800	7780	9740	11,700	16,500	21,300	26,100	30,900	35,800	40,600	50,400	55,200	59,800	64,100	68,200
4	min	450	528	594	653	707	756	846	927	1100	1250	1390	1510	1620	1730	1930	2110	2280	2450	2610
	max	4760	6530	8280	10,000	11,700	13,400	16,800	20,200	28,500	38,800	45,000	53,200	61,700	70,100	86,900	95,200	103,000	110,000	118,000
6	min	1020	1200	1350	1480	1600	1720	1920	2100	2500	2840	3140	3420	3680	3920	4370	4790	5180	5550	5910
	max	10,800	14,800	18,800	22,700	26,600	30,500	38,100	45,700	64,600	83,400	102,000	121,000	140,000	159,000	197,000	216,000	234,000	251,000	267,000
8	min	1780	2080	2340	2570	2790	2980	3340	3650	4340	4930	5460	5940	6470	7120	8370	9600	10,800	12,000	13,200
	max	18,800	25,700	32,600	39,400	46,200	52,900	66,200	79,400	112,000	145,000	177,000	210,000	243,000	276,000	343,000	375,000	406,000	435,000	464,000
10	min	2750	3230	3630	3990	4320	4630	5180	5670	6740	7660	8470	9210	10,000	11,000	13,000	14,900	16,800	18,600	20,500
	max	29,100	39,900	50,600	61,200	71,700	82,100	103,000	123,000	174,000	225,000	275,000	326,000	377,000	429,000	532,000	582,000	630,000	676,000	720,000
12	min	3970	4660	5240	5760	6240	6670	7470	8180	9720	11,000	12,200	13,300	14,500	15,900	18,700	21,500	24,200	26,900	29,500
	max	42,000	57,600	73,000	88,300	103,000	118,000	148,000	178,000	251,000	324,000	397,000	470,000	544,000	618,000	767,000	840,000	909,000	975,000	1,040,000
$Temp_{sat.}$	°F	239	259	274	287	298	307	323	338	366	388	406	422	436	448	470	489	506	520	534
$Density_{sat.}$	lb/ft^3	0.061	0.083	0.106	0.128	0.150	0.171	0.214	0.257	0.363	0.469	0.574	0.679	0.787	0.894	1.11	1.33	1.56	1.79	2.03

*To convert to metric units use: 1 in. = 25.4 mm, 1 PSIG = 0.069 bars, and 1 lbm = 0.454 kg.

†Courtesy of Endress + Hauser Instruments.

© 2003 by Béla Lipták

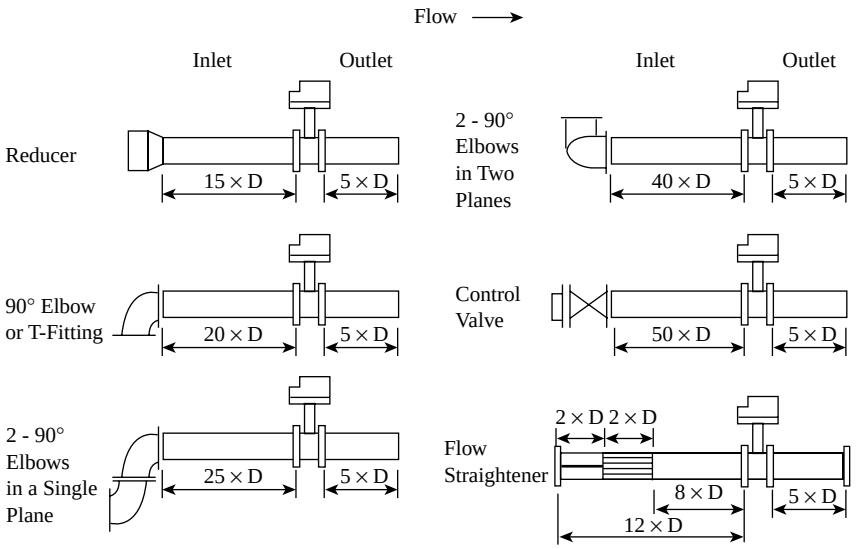

FIG. 2.30k
Straight pipe-run requirements as a function of upstream disturbance. (Courtesy of Endress+Hauser Inc.)

to be serviced while the process is in operation. There should be no excessive pipe vibration in the area where the meter is installed, and gaskets should not protrude into the pipeline.

VORTEX-PRECESSION (SWIRL) METERS

A predecessor of the vortex-shedding meter, the vortex-precession meter or Swirlmeter™, is currently manufactured by a single vendor and sold in combination with that vendor's vortex-shedding product line, sharing common sensors, electronics, and programming features.

Construction of a typical vortex-precession (swirl) meter and the operating principles are illustrated in Figure 2.30l. The fixed, swirl-inducing helical vanes at the entrance to the meter introduce a spinning or swirling motion to the fluid. After the exit of the swirl vanes, the bore of the meter contracts progressively, causing the fluid to accelerate, but with the axis of rotation still on the centerline of the meter. The swirling fluid then enters an enlarged section in the meter housing, which causes the axis of fluid rotation to change from a straight to a helical path. The resulting spiraling vortex is known as *vortex precession.* The frequency of precession is proportional to velocity and, hence, volumetric flow rate above a given Reynolds number.

The velocity of fluid in the vortex is higher than that of the surrounding fluid. Consequently, as each vortex passes the sensor, there is a change in the local fluid velocity. The frequency at which the velocity changes occur is proportional to volumetric flow rate and can be detected by piezoelectric or thermistor sensors. Currently, the only vortex-precession meter in manufacture uses piezoelectric sensors.

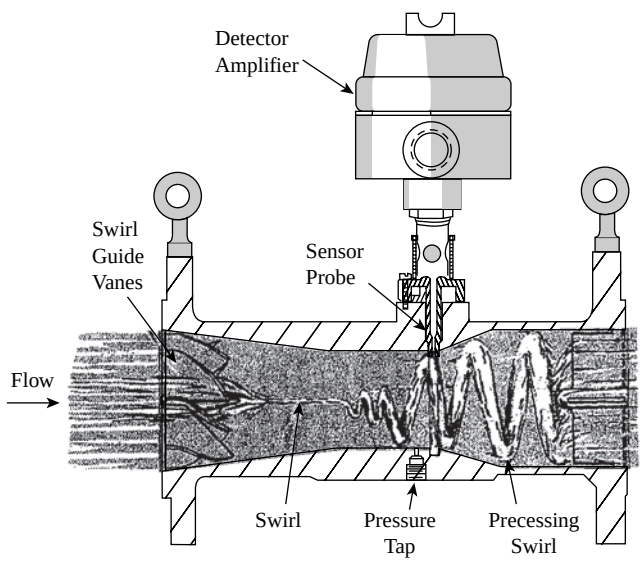

FIG. 2.30l
Construction of a typical vortex-precession (swirl) meter.

A flow straightener is fitted at the meter outlet to isolate the meter from downstream piping effects that might otherwise impair the development of the precessing vortex.

The internal components of the swirl meter required a significant amount of complex machining; thus, it is more expensive than some other meter types.

The swirl meter operates in most of the same applications as the vortex-shedding flowmeter but has the advantage that, since flow conditioning is done at the inlet and outlet of the meter body, virtually no upstream or downstream straight run is required for optimal installation. The sole supplier currently furnishes the swirl meter and the vortex-shedding meter in interchangeable "kits."

© 2003 by Béla Lipták

FLUIDIC (COANDA EFFECT) METERS

In fluidic meters, fluid entering the meter is entrained into a turbulent jet from its surroundings, causing a reduction in pressure. The internal geometry of the meter body causes the jet to be deflected from its central position and initially attach itself to one of the side walls. The jet curvature is sustained by the pressure differential across the jet. If a sufficient volume of fluid is then introduced into the control port on that side, it will cause the jet to switch to the opposite side wall. This is known as a *Coanda effect.* The jet can be made to oscillate by one of two methods. The simplest method is a relaxation oscillator. In this system, the two ports are connected. Fluid is sucked from the high-pressure side to the low-pressure side causing the jet to switch to the other wall. The jet thus continues to oscillate as the fluid is sucked alternately from one side to the other.

The more commonly used system is the feedback oscillator (see Figure 2.30m). The deflected jet causes a low-pressure area at the control port. At the upstream feedback passage, the pressure is higher due to a combination of the jet expansion and the stagnation pressure. Thus, a small portion of the main stream of fluid is diverted through the feedback passage to the control port. The feedback flow intersects the main flow and diverts it to the opposite side wall. The whole feedback operation is then repeated, resulting in a continuous, self-induced oscillation of the flow between the side walls of the meter body. The frequency of oscillation is linearly related to the volumetric flow rate above a minimum Reynolds number. As the main flow oscillates between the side walls, the flow in the feedback passages oscillates between zero and a maximum value. This frequency is detected by means of a sensor (either a thermistor or magnetic inductive pickup), providing a frequency output signal.

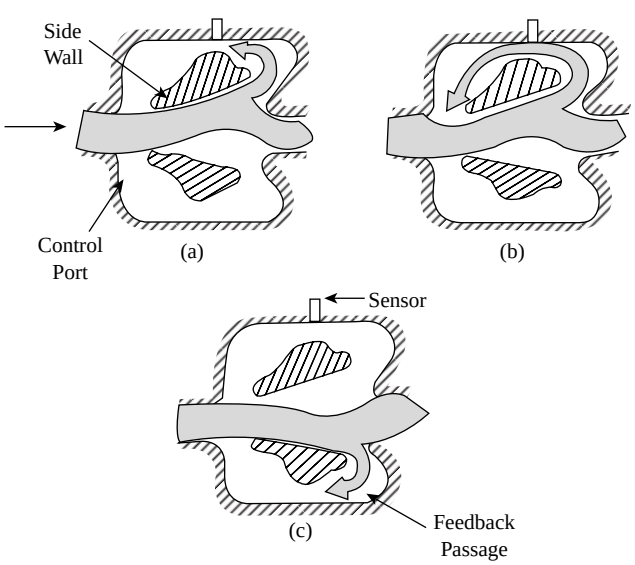

FIG. 2.30m
Diagram of the mode of operation of a feedback oscillator.

Characteristics

The principal features include a lack of moving components, fixed calibration based on the geometry of the housing, linear digital or analog output, and good rangeability. One advantage over vortex meters is that fluidic meters can operate down to a Reynolds number of 3000. The maximum flow range (dependent on size and viscosity) is 30:1. The complex housing shape largely dictates the operating pressure and maximum practical pipe diameter. In practice, a 4-in. (100-mm) diameter unit is the largest commercially available, and the operating pressure in this diameter is typically limited to 150 PSIG (1.03 MPa). Some vendors provide larger diameters up to 12 in. (300 mm) by using a bypass flow tube design. In this design, a flow restriction is placed in the tube, forcing fluid through the fluidic flowmeter mounted on top of the flow tube.

Although theoretically suitable for gaseous applications, fluidic meters have been used almost exclusively in liquid applications. Recent experimentation by several manufacturers has produced fluidic flowmeters that appear to be able to meet AGA certification requirements for household gas meters, and one manufacturer has placed a fluidic-principle gas meter in distribution for industrial and commercial natural gas metering applications.

A special, separate converter is required for the meter, which, in some instances, can incorporate a pneumatic output. As shown in Figure 2.30n, the meter factor in pulses per volume of flow passed remains within 1%, and therefore the measurement error remains well within 2% of actual flow between the Reynolds numbers of 3000 and 100,000.

CONCLUSION

The advantages of vortex-shedding flowmeters include their suitability for liquid, gas, and steam service; independence from viscosity, density, pressure, and temperature effects; low installed cost in smaller sizes; good accuracy and linearity without requiring calibration; wide rangeability; low maintenance using simple, easily accessible and interchangeable spare parts; simple installation; and direct pulse output capability.

In terms of disadvantages, they are not suitable for services that are dirty, abrasive, viscous, or mixed-flow (gas with liquid droplets, liquid with vapor bubbles), or that have low Reynolds numbers (below 20,000); the available choices in materials of construction are limited; the pulse resolution (number of pulses per gallon or liter) drops off in larger sizes; the pressure drop is high (two velocity heads); and substantial straight runs are required both upstream and downstream.

© 2003 by Béla Lipták

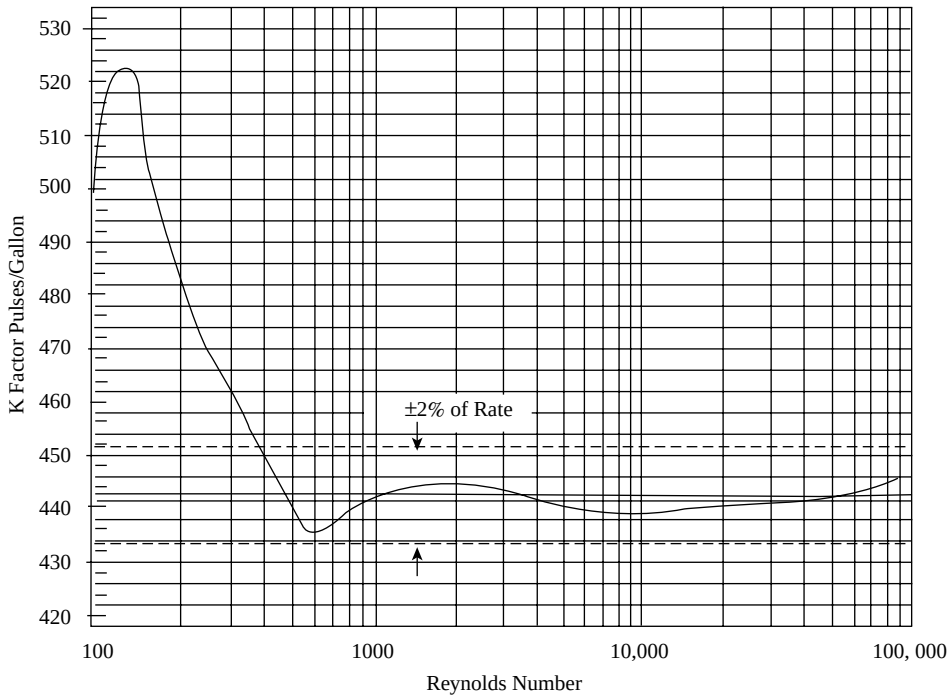

FIG. 2.30n

The meter factors of a 1-in. (25.4-mm) fluidic flowmeter stay accurate at lower values of Reynolds numbers than they do for vortex-shedding flowmeters. (Courtesy of Mycrosensor Inc.)

Bibliography

Baker, R., *Flow Measurement Handbook*, Oxford University Press, New York, 2000.

Biles, R., Vortex flowmeter performance, *Meas. Control*, September 1991.

Carver, A. and Brunson, C., Fluidic oscillation measurement proves a cost-effective solution, *Pipeline and Gas J.*, July 2001.

Choices abound in flow measurement, *Chemical Eng.*, April 1991.

Cousins, T., The Performance and Design of Vortex Meters, Fluid Flow Conference, East Kilbride, UK, 1975.

Gotthardt, W. C., Is it real vortex flow or not? *Meas. Control*, June 1991.

Herzl, J., New Sensing Techniques and Modular Constructions as Applied to the Swirl Meter, ISA 28th Annual Conference, Pittsburgh, PA.

Honda, S., On the role of a target and sidewalls to fluidic oscillation, *Flucome 2000 Proc.*, August 2000.

Kawano, T. et al., An Intelligent Vortex Glow Meter, ISA/92 Conference, Houston, TX, October 1992.

Lomas, D. J., Vortex Meters—A practical review, Measurement Technology for the 80's, ISA Symposium, Delaware, 1979.

Medlock, R. S., Vortex Shedding Meters, Liquefied Gas Symposium, London, 1978.

New design flowmeters boost accuracy, *Power*, December 1976.

Nissen, C., HPV meter, *Meas. Control*, February 1989.

O'Brien, C. J., Fueling flowmeter accuracy, reliability, *InTech*, April 1989.

Spitzer, D. W., *Flow Measurement*, 2nd ed., ISA Press, Research Triangle Park, NC, 2001.

Spitzer, D. W., *Industrial Flow Measurement*, ISA Press, Research Triangle Park, NC, 1991.

Satori, T., Vortex Flowmeter Application Report, ISA Conference, Houston, TX, 1984.

Within, W. G., Theory, Design and Application of Vortex Shedding Flowmeters, Measurement Technology for the 80's, ISA Symposium, Delaware, 1979.

© 2003 by Béla Lipták

2.31 Weirs and Flumes

W. H. HOWE (1969, 1982) **B. G. LIPTÁK** (1995) **A. V. PAWLOWSKI** (2003)

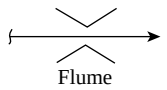



Flow Sheet Symbol

Types	Open-channel flow can be measured by detecting level in front of primaries. Bubblers, capacitance, float, hydrostatic, and ultrasonic devices are used as level sensors. Open-channel flows can also be measured without primaries by calculating flow from depth and velocity using ultrasonic and magnetic sensors.
Operating Conditions	Atmospheric
Applications	Waste or irrigation water flows in open channels
Flow Range	From 1 GPM (3.78 l/m), no upper limit
Rangeability	Most devices provide 75:1; V-notch weirs can reach up to 500:1
Inaccuracy	Laboratory devices: 2 to 3% of full scale Field installations: 5 to 10% of full scale
Costs	Primaries used in pipe inserts cost less than $1000. A 6-in. (150-mm) Parshall flume costs about $1500, and a 48-in. (1.22-m) one costs about $5000. Primaries for irrigation applications are usually field-fabricated. Manual depth sensors can be obtained for $300; local bubbler or float indicators for $750 to $1500; and programmable, transmitting, capacitance, *ultrasonic*, or bubbler units from $2000 to $3000. Open-channel flowmeters calculating flow (based on depth and velocity) range from $5000 to over $10,000.
Partial List of Suppliers	ABB Automation, Instrumentation Division (www.abb.com/us/instrumentation) (primaries) Badger Meter Inc. (www.badgermeter.com) (Parshall or manhole flume, ultrasonic and open-channel computing) Endress+Hauser Inc. (www.us.endress.com) (ultrasonic and capacitance) Fischer Controls Int. (ultrasonic) Flow Technology Inc. (www.ftimeters.com) GLI International (www.gliint.com) Hays Cleveland (www.hayscleveland.com) Kay-Ray/Sensall Inc. (www.thermo.com) (ultrasonic) Manning Environmental Corp. (www.manning-enviro.com) (primaries) Marsh-McBirney Inc. (www.marsh-mcbirney.com) (electromagnetic) Milltronics Inc. (www.milltronics.com) (ultrasonic) Montedoro-Whitney Corp. (open-channel flow by ultrasonics) MSR Magmeter Mfg. Ltd. (www.magmeter.com) (robotic magmeter probe for open channel) Princo Instruments Inc. (www.princoinstruments.com) (capacitance) Robertshaw Ind. Royce Instrument Corp. Sponsler Co. (www.sponsler.com) Thermal Instrument Co. (www.thermalinstrument.com) Thermo Polysonics (www.thermopolysonics.com)

© 2003 by Béla Lipták

WEIRS

Weirs are apertures in the top of a dam, across a channel through which flows the liquid to be measured (Figure 2.31a). The aperture may be rectangular (Figure 2.31b), trapezoidal (Figure 2.31c), or V-notch (Figure 2.31d). The special case of a trapezoidal weir with side slopes of 1:4 (Figure 2.31c) is known as a *Cippoletti weir*; this form leads to a simplified flow calculation. V-notch weirs generally have a notch angle from 30 to 90°, depending on required flow capacity.

The head is measured as the difference in level of the pool at an adequate distance upstream from the weir as compared to the horizontal crest of a rectangular or trapezoidal weir, or the bottom point of the V of a V-notch weir. Heads less than 0.1 ft (30 mm) for minimum measured flow or more than 1.0 ft (300-mm) for maximum flow are generally to be avoided,

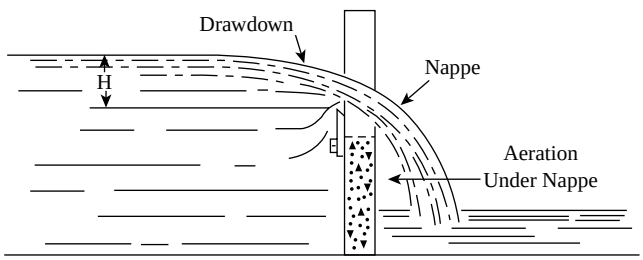

FIG. 2.31a
Flow over a weir.

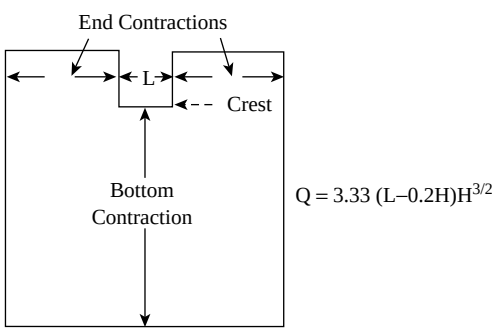

FIG. 2.31b
Rectangular weir.

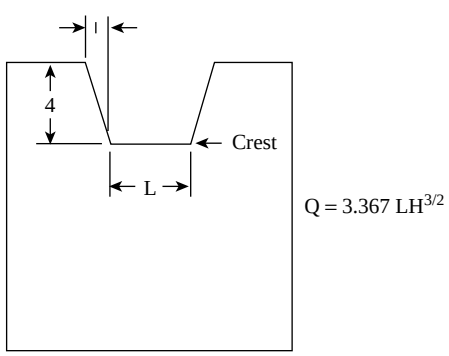

FIG. 2.31c
Cippoletti (trapezoidal) weir.

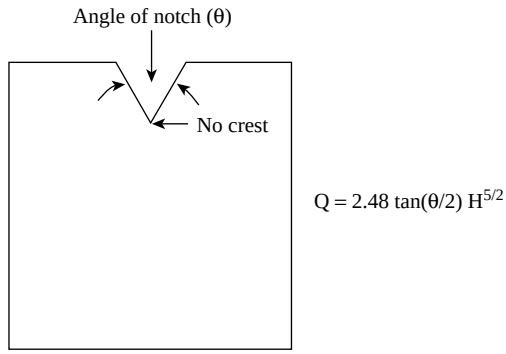

FIG. 2.31d
V-notch weir.

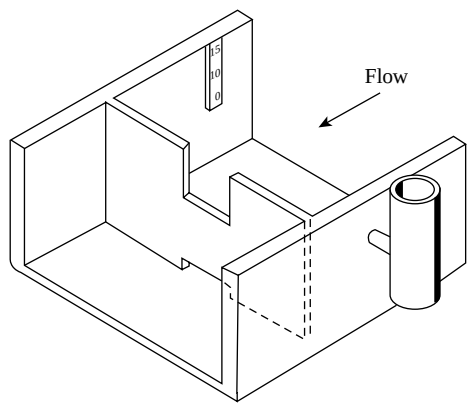

FIG. 2.31e
Weir box.

although a 1.25-ft (380-mm) head can be tolerated under favorable conditions. These limits are easily met by practical design, given that a 30° V-notch will measure a minimum flow of 1 GPM (3.8 l/m), whereas the maximum value for a rectangular or trapezoidal weir is limited only by practical crest length.

V-notch weirs are used for smaller flows. A 30° V-notch weir has a practically constant coefficient from 3.0 to 300 GPM (11.4 to 1140 l/min) with flow proportional to the five-halves power of the head. Coefficient increases roughly 2% for flow down to 1 GPM (3.8 l/min) and changes relatively little for flow up to 500 GPM (1893 l/min). For notch angle up to 90°, flow varies as the tangent of half the notch angle. Notch angle exceeding 90° is not recommended.

Rectangular or Cippoletti weirs are used for larger flows. A rectangular weir with a crest 2 ft (0.6 m) long develops a head of about 0.2 ft (60 mm) for 250 GPM (946 l/min) and 1.0 ft (305 mm) for 2700 GPM (10,221 l/min). For this weir, flow is directly proportional to crest length and to the three-halves power of the head.

The weir plate may be located in a dam in a natural channel or in a weir box (Figure 2.31e). The stilling basin ahead of the weir should be large enough so that the upstream velocity does not exceed 0.33 ft/sec (0.01 m/sec). Width and depth immediately ahead of the weir should be sufficient so that the wall effect of the bottom and sides of the channel has negligible

© 2003 by Béla Lipták

effect on the pattern of flow through the notch. It is important that the flow break clear from the sharp edge of the notch with an air pocket maintained immediately beyond and below the weir plate. The channel downstream from the weir must be sufficiently wide and deep so that, at maximum flow, there is ample clearance between flow through the notch to downstream liquid level so that this air pocket is maintained (Figure 2.31a). The upstream edge of the weir should be sharp and straight. It is usual practice to bevel the downstream edge of the weir at 45° to about a 1/32-in. (0.8-mm) edge. For rectangular and Cippoletti weirs, the crest must be carefully leveled.

Accuracy of the relation between flow and head (level) to ±2% is attainable, based on the dimensions of the primary device. Reference 1 gives full data on installation and operation of weirs.

The following equations establish the relationships between flow and measured head, provided that the installation and operation of the weir are as recommended in this section and also in the cited references.

For a V-notch weir

$$Q = 2.48 \tan\frac{1}{2}\theta H^{2.5} \qquad \textbf{2.31(1)}$$

For a rectangular weir

$$Q = 3.33(L - 0.2H)H^{1.5} \qquad \textbf{2.31(2)}$$

For a Cippoletti weir

$$Q = 3.367\, LH^{1.5} \qquad \textbf{2.31(3)}$$

where

Q = rate of flow in cubic feet per second
θ = V-notch angle in degrees
H = head* in feet of following liquid
L = crest length in feet

For conditions other than exactly as recommended, see references for correction factors.

THE PARSHALL FLUME

Developed by R.L. Parshall at the Colorado Experiment Station of the Colorado Agricultural College, in cooperation with the Division of Irrigation of the U.S. Department of Agriculture,[2] this device is a special type of venturi flume (Figure 2.31f). The loss of head is about one-quarter of that for a weir of equal capacity. Compared to weirs, approach velocity effects are practically eliminated so that a large upstream stilling basin is not required. The relatively high velocities in the system tend to flush away deposits of silt and other solids that might accumulate and alter measurement. There are no sharp edges, no pockets, and few critical dimensions; also, the device can be

* Head is measured between the level in the stilling pond and the crest of a rectangular or Cippoletti weir, or the bottom of the V of a V-notch weir.

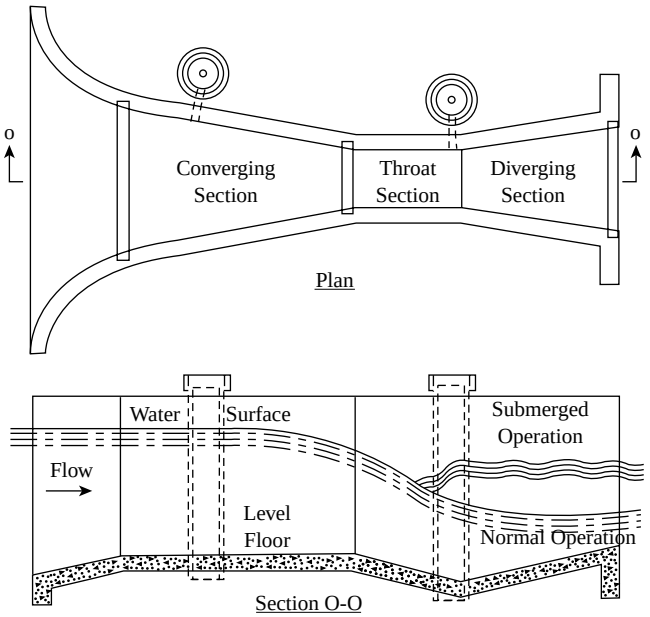

FIG. 2.31f
Parshall flume.

locally fabricated from available materials. Calibration data based on physical dimensions are available from 3 in. (76 mm) throat width with minimum range of 0.03 second-feet (13 GPM or 49 l/m) up to 50 ft (15.2 m) throat width with maximum capacity of 3300 second-feet (1,485,000 GPM/5,619,900 l/m). Flow is approximately proportional to the three-halves power of level with flow capacity of a single unit covering a range of 35:1 or more, depending on size.

Extreme accuracy is not claimed for flow measurement using this device; however, measurement is very dependable with minimal maintenance and good repeatability. Accuracy is adequate for most applications to irrigation, waste, and sewage flows.

Downstream level has minimal effect on the measurement as long as the level near the downstream end of the throat does not exceed 70% of the level measured near the upstream end of the converging section (Figure 2.31f). (Both levels are referred to the floor section of the flume.) For flumes less than 1 ft (305 mm) wide, the ratio of levels is 60% maximum. This is the preferred and more usual mode of operation. It provides best accuracy. Only one measurement of level is required, with flow computed directly from this upstream level measurement; direct, continuous readout of flow rate is readily provided.

Where operating conditions (available head, maximum flow rate, weir size, and so on) result in a throat level greater than 70% of upstream level, so-called *submersion* results. Measurement can be obtained with a downstream level as great as 95% of upstream level. However, this requires a correction factor based on both upstream level and downstream level in the flow computation, accuracy suffers, and special equipment is usually required for direct readout of flow.

The simplified equations based on a single measurement at the upstream location are as follows:

© 2003 by Béla Lipták

TABLE 2.31h
Dimensions and Capacities of One-Piece Parshall Flumes†*

				Free Flow (GPM)	
Throat Width	*Depth (inches)*	*Length*	*Weight (pounds)*	*Minimum*	*Maximum*
2 in.	12	2 ft, 6.5 in.	35	9.0	210
3 in.	24	3 ft, 0 in.	40	13.5	494
6 in.	24	5 ft, 0 in.	100	22.4	1750
9 in.	30	5 ft, 4 in.	130	40.4	3950
12 in.	36	9 ft, 4.875 in.	280	157.0	7225
18 in.	36	9 ft, 7.875 in.	305	228.9	11,040
24 in.	36	9 ft, 10.875 in.	330	296.2	14,855
3 ft, 0 in.	36	10 ft, 4.075 in.	385	435.3	22,619
4 ft, 0 in.	36	10 ft, 10.375 in.	450	565.5	30,473
5 ft, 0 in.	36	11 ft, 10.25 in.	515	996.3	38,417
6 ft, 0 in.	36	11 ft, 10.375 in.	575	1180.3	46,450
7 ft, 0 in.	36	12 ft, 4.25 in.	650	1831.1	54,484
8 ft, 0 in.	36	12 ft, 10.125 in.	730	2073.5	62,607

*Units in table can be converted using 1 in. = 25.4 mm, 1 lb. = 0.45 kg; 1 in. H_2O = 249 Pa; 1 GPM = 3.785 l/min.
†Courtesy of ABB Inc.

For L = 0.25 ft,

$$Q = 3.97\ LH^{1.547} \qquad \textbf{2.31(4)}$$

For L = 0.5 ft,

$$Q = 4.12\ LH^{1.58} \qquad \textbf{2.31(5)}$$

For L = 0.75 ft,

$$Q = 4.10\ LH^{1.53} \qquad \textbf{2.31(6)}$$

For L = 1 to 8 ft,

$$Q = 4.0\ LH(1.522L)^{0.026} \qquad \textbf{2.31(7)}$$

For L = >8 ft,

$$Q = (2.5 + 3.69\ L)H^{1.6} \qquad \textbf{2.31(8)}$$

where
L = width of throat section in feet
Q = volume flow rate in cubic feet per second
H = head in feet*

Parshall flumes are available in plastic construction. One variation of the plastic units is the nested, dual-range configuration in which two flumes are nested inside each other. This configuration is used in installations where the start-up conditions are substantially lower than the final operating flow rates (Figure 2.31g). With these units, the flow initially passes through the inner flume; then, when the flow exceeds its capacity, the inner flume is removed while the outer flume remains in place permanently. Dimensions of fiberglass-reinforced resin Parshall flumes are given in Table 2.31h.

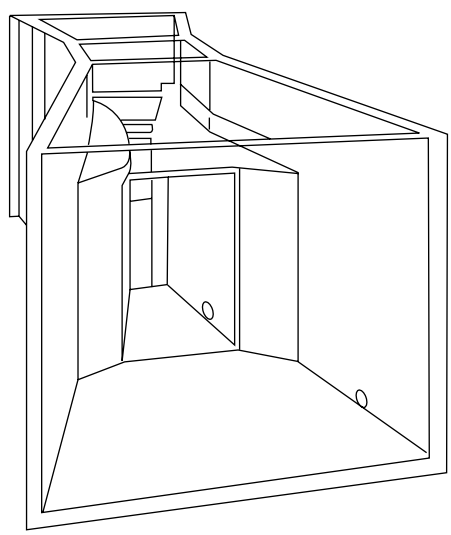

FIG. 2.31g
Dual-range Parshall flume. (Courtesy of ABB - Fischer & Porter Co.)

THE PALMER BOWLUS FLUME

Palmer-Bowlus flumes provide the advantages of rounded bottoms and relatively small size. Compared with other flumes, this makes for easier installation in pipe inverts, ends, and sewer manholes. They also have a smaller head change vs.

* H (head) is measured at a designated point in the upstream converging section, referred to the level floor of this section.

© 2003 by Béla Lipták

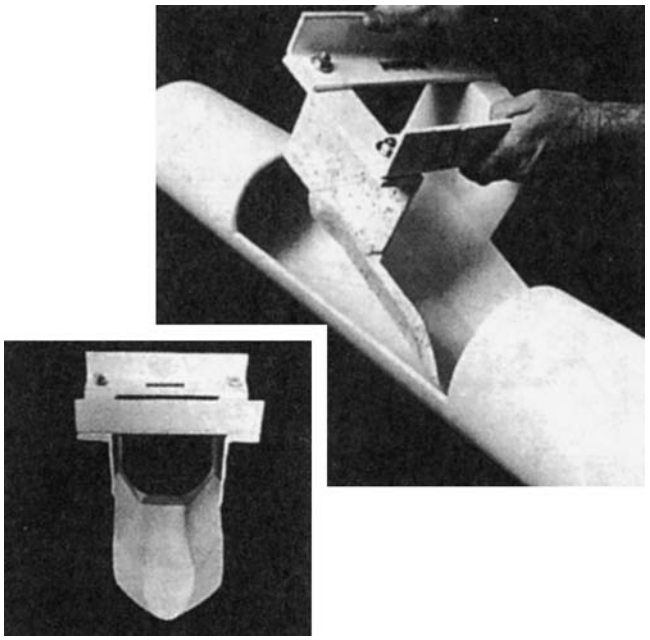

FIG. 2.31i
Flume insert elements. (Courtesy of Manning Environmental Corp.)

flow, and their dimensions are scalable to throat width, which makes rating of off-size flumes possible. A disadvantage is that the throat is raised; therefore, the possibility exists for upstream silt deposition at low flows. Reference 3 provides data on this.

These flumes are available for installation in existing round pipe using the type of insert shown in Figure 2.31i.

THE KENNISON NOZZLE, PARABOLIC FLUME, AND LEOPOLD LAGCO FLUME

These are typical proprietary products that were designed primarily for end-of-pipe flow measurement of waste, sewage, and the like, where the liquid flow to be measured emerges from a cylindrical pipe or conduit that usually is not completely full of liquid. All are designed to flush solids through the device without accumulations and to allow accessibility for inspection and cleaning if necessary.

These devices develop heads that are a function of flow rate. In the Kennison nozzle, head is almost linear with flow above 10% of maximum flow rate. Accuracy is stated as 2% in this range. For the parabolic flume and the Leopold Lagco flume, flow varies approximately as the three-halves power of head.

These devices are available in medium to large sizes. Details as to structure, application, and characteristics are available from the manufacturers.

DETECTORS FOR OPEN-CHANNEL SENSORS

The level rise generated by flumes or weirs can be measured by nearly any of the level detectors described in Chapter 3, including such simple devices as the air or nitrogen bubblers (Section 3.2).

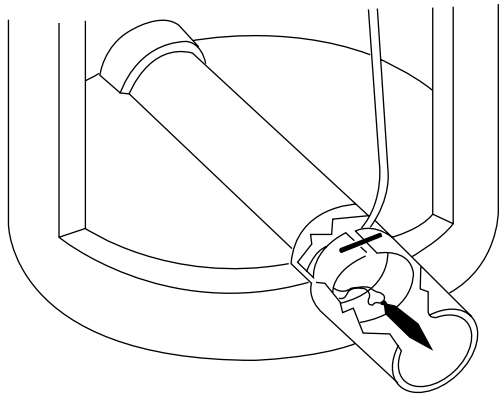

FIG. 2.31j
Volumetric flow computer measures depth and velocity in open channel and does not require a primary device. (Courtesy of Montedoro-Whitney Corp.)

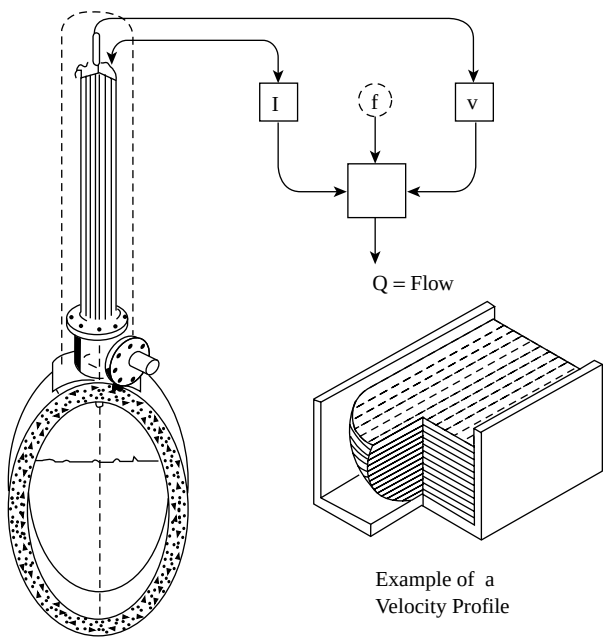

FIG. 2.31k
Robot-operated magnetic flow meter probe sensor is used to compute channel flow. (Courtesy of MSR Magmeter Mfg. Ltd.)

It is also possible to detect the flow in open channels without the use of flumes, weirs, or any other primary devices. One such design computes flow in round pipes or open channels by ultrasonically measuring the depth, calculating the flowing cross-sectional area on that basis, and multiplying the area by the velocity to obtain volumetric flow (Figure 2.31j).

Another open-channel flowmeter that does not need a primary element uses a robot-operated magnetic flowmeter probe to scan the velocity profile in the open channel (Figure 2.31k). In this design, the computer algorithm calculates and

© 2003 by Béla Lipták

separately adds up the flow segments through each slice of the velocity profile as the velocity sensor moves down to the bottom of the channel.

References

1. Streeter, V. L., The kinetic energy and momentum corrections for pipes and open channels of great width, *Civil Eng.*, 12(4), 212, 1942.
2. Measuring water in irrigation channels, *Farmers Bulletin 1682*, U.S. Dept. of Agriculture, Washington, D.C.
3. Paper Number 1948, in *Proc. Inst. Civil Eng.*, 101, 1195, 1936.
4. Wells, E. A. and Gotaas, H. B., Design of Venturi tubes in circular conduits, in *Proc. Am. Soc. Civil Eng., J. Sanitary Eng. Div.*, 82, 1956.
5. *Water Measurement Manual*, 4th ed., U.S. Dept. of the Interior, Bureau of Reclamation, Washington D.C.

Bibliography

Boyes, W. H., Pumps and flowmeters hand in hand, *Flow Control*, September 2001.

Cushing, M., The future of flow measurement, *Flow Control*, January 2000.

Eren, H., Flowmeters, in *Survey of Instrumentation and Measurement*, S. A. Dyer, Ed., John Wiley & Sons, New York, 2001, 568–580.

Lipták, B. G., Flow measurement trends, *Control*, June 2000.

Miller, R. W., *Flow Measurement Engineering Handbook*, 3rd ed., McGraw-Hill, New York, 1996.

Open channel flowmeters, *Meas. Control*, December 1992.

Shinskey, G., Characterizers for flume and weirs, *Instrum. Control Syst.*, 111, September 1974.

Spitzer, D. W., *Flow Measurement Practical Guide Series*, 2nd ed., ISA Press, Research Triangle Park, NC, 2001.

Thorsen, T. and Oen, R., How to measure industrial wastewater flow, *Chemical Eng.*, 97–100, February 17, 1975.

© 2003 by Béla Lipták

Level Measurement

3

3.1
APPLICATION AND SELECTION 405

Introduction 405
Performance 405
Reliability 411
Operating Principles 411
- Density/Weight 411
- Conductivity/Dielectric 412
- Mechanical Contact 412
- Optical 413

Tank Access 413
Applications 413
- Atmospheric Vessels 413
- Pressurized Vessels 414
- Accounting Grade (Tank Gauging) 414
- Sludge and Slurries 415
- Foaming, Boiling, and Agitation 416
- Interface Measurement 417

Bibliography 419

3.2
BUBBLERS 421

Introduction 421
General 422
- Purge Gas 423

Sizing Calculations 424
- Mass and Level 425
- The Hydrostatic Tank Gauge (HTG) 425
- Density 425
- Calibration 426

Flow Rate and Plugging Considerations 426
- Minimum Purge Flow Rate 426
- Maximum Purge Flow Rate 426
- Dip Tube Diameter Selection 426
- Upsets and Plugging 426

Installation Details 427
- Pressure and/or Flow Regulators 428

Diaphragm-Type Dip Tube 428
Sample Calculations 429
- Level Detector Calibration Example 429
- Density Detector Calibration Example 429

Conclusion 429
Bibliography 429

3.3
CAPACITANCE AND RADIO FREQUENCY (RF) ADMITTANCE 430

Introduction 431
Types of Probes 432
Mounting and Tank Entry 434
Electronic Units 435
Single-Point Switches 436
- Conducting Process Materials 436
- Insulating Process Materials 436
- Plastic, Concrete, or Fiberglass Tanks and Lined Metal 436
- Interface 437

Granular Solids 437
Continuous Transmitters 438
- Conducting Liquids 438
- Insulating Liquids 439
- Continuous Liquid–Liquid Interface 439
- Granular Solids 440

Glossary 441

© 2003 by Béla Lipták

Technology 443
Conclusion 444
Bibliography 444

3.4 CONDUCTIVITY AND FIELD-EFFECT LEVEL SWITCHES 445

Conductivity-Type Level Switch 446
Pump Alternator Circuit 447
Advantages and Limitations 447
Field-Effect Level Switches 447
Bibliography 448

3.5 DIAPHRAGM LEVEL DETECTORS 449

Diaphragm Switches for Solids 450
Diaphragm Switches for Liquids 451
Diaphragm-Type Level Sensors and Repeaters 451
Electronic Diaphragm Level Sensors 452
Bibliography 453

3.6 DIFFERENTIAL PRESSURE LEVEL DETECTORS 454

Sensing Differential Pressure 455
Extended Diaphragms 455
Chemical Seals 456
Intelligent D/P Cells and Tank Expert Systems 456
Pressure Repeaters 457
Dry, Motion Balance Devices 457
Liquid Manometers 458
Level Applications of D/P Cells 458
Clean Liquids in Atmospheric Tanks 459
Clean Liquids in Pressurized Tanks 459
Hard-to-Handle Fluids in Atmospheric Tanks 460
Hard-to-Handle Fluids in Pressurized Tanks 460
Special Installations 461
Boiling Applications 461
Cryogenic Applications 461
Normal Ambient Temperature Bi-phase Applications 462
Span, Elevation, and Depression 462
Interface Detection 463
Bibliography 464

3.7 DISPLACER LEVEL DEVICES 465

Introduction 465
Displacer Switch 466
Torque-Tube Displacers 466
Sizing of Displacers 467
Interface Measurement 468
Rag Layer 469
Features and Installation 469
Spring-Balance Displacer 470
Force-Balance Displacer 470
Flexible Disc Displacer 471
Flexible-Shaft Controllers 471
Conclusion 473
Bibliography 473

3.8 FLOAT LEVEL DEVICES 474

Introduction 475
Float Level Switches 475
Reed-Switch Designs 476
Float and Guide Tube Designs 477
Tilt Switches 478
Float-Operated Continuous Indicators 478
Pressurized Tank Applications 479
Magnetically Coupled Indicators 479
Density Measurement 481
Conclusion 481
Bibliography 481

3.9 LASER LEVEL SENSORS 482

Background 482
Pulsed Laser Sensors (Time of Flight) 482
Frequency-Modulated (Continuous-Wave) Sensors 483
Triangulation Measurement Sensor 483
Pulsed-Laser Level Sensor 483
Installation 483
Vapor-Space Effects 483
Types of Targets and Angle of Repose 484
Laser Eye Safety 485
Laser Power and Ignition Safety 485
Summary 485
Bibliography 485

3.10 LEVEL GAUGES, INCLUDING MAGNETIC 486

Introduction 487
Tubular Glass Gauge 488
Circular Transparent Gauge 488
Transparent Gauge (Long Form) 488
Reflex Gauge 489
Armored Gauges 490
Gauge Glass Materials 490
Design Features 490
Gauging Inaccuracies 491
Accessories 491
Application-Specific Requirements 491

© 2003 by Béla Lipták

Installation 492
Magnetic Level Gauges 492
Magnetic Followers and Indicators 493
Magnetostrictive Transducers 494
Remote Reading Gauges 494
Differential Pressure 495
Conductivity 495
Circular Gauges 495
Magnetostrictive Transducers 495
Conclusion 496
References 496
Bibliography 496

3.11
MICROWAVE LEVEL SWITCHES 497

Reflection Switches 498
Beam-Breaker Switch 499
Coating Effects 499
Conclusion 499
References 499
Bibliography 499

3.12
OPTICAL LEVEL DEVICES 500

Light Refection 500
Light Transmission 501
Light Refraction 502
Conclusion 503
Reference 503
Bibliography 503

3.13
RADAR, NONCONTACTING LEVEL SENSORS 504

Principles of Operation 505
FMCW 506
Pulse 506
Accuracy and Resolution Factors 507
Application Considerations 507
References 507
Bibliography 507

3.14
RADAR, CONTACT LEVEL SENSORS (TDR, GWR, PDS) 508

Definition of Terms 509
Introduction 509
Theory of Operation 509
Guided Wave Radar 509
Phase Difference Sensors 511
Contact Radar Systems 511
Electronics 511
Probe (Waveguide) 511
Probe Selection and Application 512
Interface Measurement 512
Conclusion 513
References 513
Bibliography 513

3.15
RADIATION LEVEL SENSORS 514

Radiation Phenomenon 515
Source Materials 515
Units and Attenuation of Radiation 515
Source Sizing 516
Safety Considerations 517
Allowable Radiation Exposures 517
Nuclear Regulatory Commission 518
Detectors 518
Geiger–Mueller Tube 518
Gas Ionization Chamber 519
Scintillation 519
Level Switch Applications 519
Continuous Level Measurement 520
Narrow Vessels or Interface 521
Installation Notes 521
Calibration Considerations 522
Backscatter Designs 522
Traversing Designs and Density Measurement 522
Electronics 523
Conclusions and Trends 523
Bibliography 525

3.16
RESISTANCE TAPES 526

Actuation Depth 527
Pressure Effect 527
Temperature and Other Effects 528
Conclusion 529
Bibliography 529

3.17
ROTATING PADDLE SWITCHES 530

Introduction 530
Rotating Paddle Switches 531
Installations 531
Bibliography 532

3.18
TANK GAUGES INCLUDING FLOAT-TYPE TAPE GAUGES 533

History of Custody Transfer 534
Tank Gauge Designs 534
Accuracy 536
Traditional Tape Level Sensors 538

© 2003 by Béla Lipták

Wire-Guided Float Detectors 538
Encoding 539
Temperature Compensation 540
Inductively Coupled Tape Detector 540
Wire-Guided Thermal Sensor 541
Solids Level Detectors 541
Capacitance and Displacer Tape Devices 542
Multiple-Tank Systems 542
Conclusion 543
Reference 543
Bibliography 543

3.19
THERMAL LEVEL SENSORS 544

Thermal Level Switches 544
Thermal-Differential Level Transmitter 546
Using Thermometers as Level Sensors 546
Conclusion 546
Reference 547
Bibliography 547

3.20
ULTRASONIC LEVEL DETECTORS 548

The Nature of Ultrasound 549
Level Switches 550
Damped Vibration Type 550
Absorption Type 550
Interface Detector 551
Level Transmitters 551
Multi-Tank Packages 552
Recent Developments 553
Conclusion 554
Reference 554
Bibliography 554

3.21
VIBRATING LEVEL SWITCHES 556

Vibrating Level Switches 556
Tuning Fork 557
Vibrating Probes 558
Conclusion 558
Bibliography 558

© 2003 by Béla Lipták

3.1 Application and Selection

D. S. KAYSER (1982) **B. G. LIPTÁK** (1969, 1995) **J. B. RODEE** (2003)

INTRODUCTION

There are dozens of variations on the 22 technologies presented in this chapter. Each one has a slight advantage in terms of some of the infinite combinations of range, tank shape, process materials, available power, pressure and temperature, and accuracy requirements. The purpose of this section is to assist the reader in narrowing the choices and focusing on the most appropriate technologies for a particular application. In selecting the level instrument, we should determine which factors are desirable and which are not. In practice, this is seldom carried out, and, frankly, there is a great tendency to reach for a d/p transmitter, if not a displacer, and live with whatever performance it produces. This is the cliché solution and, like so many clichés, it is, if not the wrong answer, often not the best.

If a level instrument depends on motion (such as float, paddle, slip-tube, and tape types), if it has dead-ended cavities that might plug (such as some diaphragms, differential-pressure types, and sight gauges), if it will not operate properly when coated (such as some capacitance, conductivity, displacer, float, optical, and thermal types), or if a flow of a purge medium is required for its operation (bubbler type), it will be less reliable (more likely to require maintenance) than otherwise. Therefore, from a maintenance point of view, level sensors that do not make physical contact with the process material might be preferable. These include proximity capacitance, radar, laser, sonic and ultrasonic types, and sensors that can be located outside the tank, such as time-domain reflectometry (TDR) and microwave for fiberglass tanks, nuclear gauges and load cells (the last of these is discussed in Chapter 7). To assist the reader in selecting the right level instrument for a particular application, please refer to Orientation Tables 3.1a and 3.1b.

To use these tables, the particular service is first defined. The service is divided into three liquid categories and that of solids. The nature of the process material determines the applicable subdivision. With the service defined, the reader can scan down the selected column to find a letter indication (E = excellent; L = only particular models, geometries, or fluids work well; F = fair; or NA = not applicable) of the suitability for a particular technology. The ratings are based on such factors as inaccuracy, reliability, and ease of maintenance, but they do not take hardware cost into account. Therefore, an instrument that is rated "excellent" for a particular service may not be the cheapest selection. It is an unfortunate fact of today's economic life that nearly every capital budget is divorced from the maintenance budget for the equipment purchased. The cost of downtime caused by a cheap, misapplied level switch generally is not factored into the project purchasing decision. Another table, provided to give general guidance on level sensor selection, is Table 3.1c.

Certain factors, listed below, must be known to make an intelligent choice, regardless of who makes it.

- Maximum and minimum temperature (real, not "design")
- Maximum and minimum pressure (real, not "design")
- Tank geometry, including nozzle dimensions
- Process chemicals (no trade names); remember cleaning solutions
- Tank construction materials
- Agitation horsepower and RPM
- Moisture range of granular solids
- Which phase is on top for interface measurements

When the possible selections have been narrowed down to a few, the reader may refer to the corresponding sections of this chapter. In the front of each section, there is a summary of basic features, such as inaccuracy, range, materials of construction, pressure and temperature ratings, and instrument price range (any required mounting, plumbing items, and labor cost can change the picture significantly). A brief inspection of the summary can determine whether the instrument meets the general requirements of the application under consideration. If so, additional information may be obtained from the text in the section. If some of the characteristics are unacceptable, the reader should return to the "Orientation Tables" for an alternative.

PERFORMANCE

There are no level transmitters or switches that can precisely specify accuracy or reliability outside of the context of the particular application. Nearly every manufacturer publishes an *accuracy* specification, which this volume refers to as *inaccuracy* and which, hopefully, everyone recognizes as *error*.

© 2003 by Béla Lipták

TABLE 3.1a
Orientation Table-Point Level Switches

				Process Materials												Cost		
				Waterlike Liquids			Coating Liquids			Foams		Solids						
Technology	*Max. Temp.-F[C]*	*Non-Contact Possible*	*Inaccuracy-Inches[mm]*	*Conducting*	*Insulating*	*Interface*	*Conducting*	*Insulating*	*Aqueous Slurries*	*Aqueous Foam*	*Organic Foam*	*Powder*	*Chunks*	*Sticky*	*Comments/Precautions*	*$100–300*	*$300–1000*	*Over $1000*
Capacitance/RF	2000 [1100]	✔	0.125–2 [3–50]	E	E	E	NA/E	L/E	NA/E	ME	IG/ME	E	F/E	L/E	Conductive coating produces false high without guard-type probe. Short insertions can be a problem.	✔	✔	✔
Conductivity Switch	1800 [980]		0.125 [3]	E	NA	F	L	NA	L	ME	IG	L	L	NA	Detects conductive process materials. Insulating coatings produce false lows/conductive false highs.	✔	✔	
Diaphragm	350 [175]		1–2 [50–100]	L	L	NA	L	L	NA	IG	IG	F	F	NA	Mainly for granular solids.	✔		
Differential Pressure	350 [175]		1–4 [25–100]	L	L	NA	F	F	NA	IG	IG	NA	NA	NA	Clean liquids with constant specific gravity.	✔	✔	
Displacer	850 [450]		0.2–0.5 [5–13]	E	E	F	F	F	NA	IG	IG	NA	NA	NA	Not recommended for sludge or slurries. Vacuum with high viscosity can cause dynamic instability.	✔	✔	
Float	500 [260]		1 [25]	E	E	L	F	F	NA	IG/ME	IG/ME	NA	NA	NA	Moving parts limit most designs to clean service. Only density-adjusted floats can detect interfaces.	✔	✔	

© 2003 by Béla Lipták

Microwave Switch	400 [200]	✔	0.5 [13]	E	L	E	E	L	E	ME	IG	L	L	FA	Low dielectric constant and thick coating are problems.		✔	✔
Optical Switch	260 [125]	✔	0.25–1 [6–25]	E	E	L	L	L	NA	L	L	L	NA	NA	Refraction-type for clean liquids only; reflection-type requires clean vapor space. Coating is a problem.	✔		
Radiation (Nuclear)	UL	✔	0.25–1 [6–25]	E	E	F	E	E	F	IG/ME	IG/ME	E	E	F	Requires NRC license. Source disposal can be a problem. Heavy coatings can limit reliability.			✔
Rotating Paddle Switch	500 [275]		2–4 [50–100]	NA	NA	NA	NA	NA	NA	NA	NA	E	F	NA	Limited to detection of dry, noncorrosive, low-pressure solids.	✔		
Slip Tubes	200 [90]		0.5 [13]	F	F	NA	NA	NA	NA	NA	NA	NA	NA	NA	Obsolete and unsafe.	✔		
(Ultra)Sonic	300 [150]		0.125 [3]	E	E	NA	L	L	NA	IG	IG	NA	NA	NA	Air bubbles and solid particles in the liquid will produce a “Low” signal.	✔	✔	
Thermal Dispersion	850 [450]		0.5 [13]	E	E	L	F	F	NA	IG/ME	IG/ME	NA	NA	NA	Foam detection is limited by the thermal conductivity, and interface by differential thermal conductivity.	✔	✔	
Vibrating Switch	300 [150]		0.25 [6]	L	L	NA	F	F	NA	IG	IG	E/F	E	NA	Excessive material buildup can prevent operation. Sensitive to mechanical shock.	✔	✔	

E = excellent
L = limited models, geometry, or process materials
F = fair
NA = not applicable UL = unlimited
ME = measures foam
IG = ignores foam

© 2003 by Béla Lipták

TABLE 3.1b
Orientation Table-Level Transmitters

				Process Materials												Cost		
				Waterlike Liquids			Coating Liquids			Foams		Solids						
Technology	*Max. Temp.-°F[C]*	*Non-Contact Possible*	*Inaccuracy-%Span*	*Conducting*	*Insulating*	*Interface*	*Conducting*	*Insulating*	*Aqueous Slurries*	*Aqueous Foam*	*Organic Foam*	*Powder*	*Chunks*	*Sticky*	*Comments/Precautions*	*$300–1000*	*$1000–2500*	*Over $2500*
Air Bubblers	UL		0.5–1#	E	E	NA	F	F	NA	IG	IG	NA	NA	NA	High maintenance. Requires high reliability gas supply.	✓	✓	
Capacitance/RF	2,000 [1100]		0.5–3	E	E/F	E	NA/E	F/E	NA/E	ME	IG/ME	L	L	L	Interface between conductive layers or liquid/solid interface doesn't work. Highly conductive coatings with short probes are a problem.	✓	✓	✓
Diaphragm	350 [175]		1–3#	L	L	NA	F	F	NA	IG	IG	NA	NA	NA	Submerged sensors need low pressure (atmospheric) reference.	✓	✓	
Differential Pressure	1200 [650]		0.25–1#	E	E	NA	E	E	NA	IG	IG	NA	NA	NA	Only extended diaphragm seals or repeaters can eliminate plugging. Purging and sealing legs are also used.	✓	✓	
Displacer	850 [450]		0.25–1#	E	E	F	L	L	NA	IG	IG	NA	NA	NA	Not recommended for sludge or slurry service. Vacuum and high viscosity can cause dynamic instability.		✓	✓
Float	500 [260]		0.1–3	E	E	L	L	L	NA	IG/ME	IG/ME	NA	NA	NA	Moving parts limit most designs to clean service. Only preset density floats can follow interfaces.	✓	✓	✓
Laser	300 [150]	✓	0.25 in. [6 mm]	L	L	L	E	E	E	L	L	L	E	E	Transmittance of upper phase and reflectance of lower phase determine performance.			✓

© 2003 by Béla Lipták

Level (Sight) Gage	700 [370]		0.25 in. [6 mm]	E	E	L	L	L	NA	L	L	NA	NA	NA	Must have same temperature as tank. Foam and boiling are problems. Opaque coatings cause incorrect readings.	✓	✓	
Radar	500 [260]	✓	0.1–1	E	L	NA	E	L	E	L	NA	E	L	L	Low dielectric materials limit range. Condensation or crystallization on antenna can cause errors.		✓	✓
Radiation (Nuclear)	UL	✓	1–2	E	E	E/NA	E	E	L	L	E	E	E	E	Require NRC license. Spent source disposal is a problem. Heavy coatings affect accuracy.			✓
Resistance Tapes	225 [110]	✓	0.1–1	E	E	NA	L	L	F	IG	IG	NA	NA	NA	Limited temperature and pressure range. Large specific gravity changes affect accuracy.		✓	
(Ultra)Sonic	300 [150]	✓	0.25–3	E	E	NA	F	F	NA	IG	IG	NA	NA	NA	Presence of dust, dew in vapor space hurts performance. Range is limited by foam and angled or fluffy solids.	✓	✓	
Tape Floats (& Servos)	300 [150]		0.1 in. [3 mm]	E	E	NA/F	F	F	NA	IG/ME	IG/ME	NA/F	NA/F	NA	Servo plumb bob is suitable for solids and interface. Mechanical hang-up is the biggest problem.		✓	✓
TDR	400 [200]		0.1–2	E	E	L	E	F	E	ME	IG	E	E	L	Long nozzles are a problem. Range and accuracy on insulating media, greater with high dielectric constant. Significant dead zones.		✓	✓
Thermal Dispersion	850 [450]		1–3#	E	E	NA	F	F	NA	IG/ME	IG/ME	NA	NA	NA	Foam and interface capability is limited by the thermal conductivities involved.		✓	✓

E = excellent ME = measures foam
L = limited models, geometry, or process media IG = ignores foam
F = fair
NA = not applicable UL = unlimited # assuming constant density

© 2003 by Béla Lipták

TABLE 3.1c
Level Sensor Selection Guide

	Liquids	*Liquid/Liquid Interface*		*Foam*		*Slurry*		*Suspended Solids*		*Powdery Solids*		*Granular Solids*		*Chunky Solids*		*Sticky Moist Solids*	
	Continuous	*Point*	*Continuous*	*Point*	*Continuous*	*Point*	*Continuous*	*Point*	*Continuous*	*Point*	*Continuous*	*Point*	*Continuous*	*Point*	*Continuous*	*Point*	*Continuous*
Beam Breaker	—	—	—	2	—	—	—	—	—	1	—	1	—	3	—	1	—
Bubbler	1	—	—	—	—	3	2	—	—	—	—	—	—	—	—	—	—
Capacitance	1	1	1	1	2	1	2	—	—	2	2	1	2	2	2	1	2
Conductive	—	2	—	1	—	1	—	—	—	3	—	3	—	3	—	1	—
Differential Pressure	1	2	2	—	—	2	2	—	—	3	3	—	—	—	—	—	—
Electromechanical																	
Diaphragm	1	2	—	—	—	2	2	—	—	1	3	1	—	3	—	2	3
Displacer	2	2	2	—	—	3	2	—	—	—	—	—	—	—	—	—	—
Float	—	2	—	—	—	3	—	—	—	—	—	—	—	—	—	—	—
Float/Tape	1	—	—	—	—	—	3	—	—	—	—	—	—	—	—	—	—
Paddle Wheel	—	—	—	—	—	3	—	—	—	2	—	1	—	3	—	2	—
Weight/Cable	1	—	—	—	—	—	1	—	1	—	1	—	1	—	1	—	1
Gauges																	
Glass	1	2	2	3	3	3	3	—	—	—	—	—	—	—	—	—	—
Magnetic	1	—	—	3	3	3	3	—	—	—	—	—	—	—	—	—	—
Inductive	—	—	—	—	—	2	—	—	—	2	2	2	2	2	2	3	3
Microwave	1	—	—	—	—	1	1	—	—	1	2	1	1	1	1	1	1
Radiation	1	—	—	—	—	1	1	—	—	1	1	1	1	1	1	1	1
Sonic Echo																	
Sonar	—	2	2	—	—	—	3	1	1	—	—	—	—	—	—	—	—
Sonic	1	3	3	—	—	1	1	2	2	—	3	1	1	1	1	2	1
Ultrasonic	2	2	2	—	—	1	2	1	1	—	3	2	2	1	2	2	2
Thermal	—	1	—	2	—	2	—	—	—	—	—	—	—	—	—	—	—
Vibration	—	3	—	—	—	2	—	1	—	1	—	1	—	1	—	1	—

Source: I&CS/Endress+Hauser, Inc.
1 = Good; 2 = Fair; 3 = Poor or Not Applicable.

© 2003 by Béla Lipták

This is a statement of maximum error that is usually obtained by measuring something other than level. With d/p transmitters, the "other" is usually air pressure. With capacitance, it is a high-precision capacitance box. With sonic and radar instruments, it is a handy wall. With displacers, it is precision weights. These results should be considered to be *laboratory inaccuracy*, which relates to the least possible error. It is achievable only in perfect applications, where the critical parameters are invariable.

The real-world variables that can multiply the inaccuracy include

- Density variation for any of the density-sensing instruments
- Variations in the speed of sound resulting from the composition in the "air space" for sonic instruments
- Insulating coatings that change the speed of light for TDR instruments
- Conductive coatings on capacitance probes
- Any kind of coating for optical instruments
- Condensation on the antennas of radar instruments

The disingenuous use of lab error by manufacturers is no less appropriate than user specifications that call for unrealistic and unusable error limits. An example of specifiers run amok would be "0.25% inaccuracy on a 6-ft (1800-mm) interface" application, where the interface cannot be defined within 6 in. (150 mm). Certainly, in custody transfer measurements of storage tanks, extreme precision is required. How realistic though, is a 0.125-in. (3-mm) measurement of the top surface when water accumulation of several inches is ignored at the bottom of the tank?

When accuracy is critical, it should be quoted by the supplier, in the context of the application, just as we specify model number, price, and delivery. Of course, this puts the onus on the purchaser to fully define the application (beyond the limits of an "ISA spec sheet"). It also requires that the description include all chemicals (no trade names), including those for cleaning, purging, and so forth. It should also include the functional reason for making the measurement (e.g., "control pump-out between X and Y feet," "material scheduling," "operator information," "feed-forward to dryer control") rather than descriptions such as "to PLC."

RELIABILITY

It is popular to confuse *mean time between failures (MTBF)* for the electronic circuits with the expected trouble-free life of the total instrument. Because we are dealing with primary instruments, the effects of temperature extremes and cycling, and stress due to agitation, are more significant factors in the expected trouble-free life. The characteristics of the process materials (such as coating, foaming, density variation, and crystallization) can produce major errors in days or even hours. Although many instruments, properly installed, can perform untouched for 20 years, any instrument can fail at any time. When instrument failure could cause more than irritation, backups should be mandatory. In such cases, the need for backups, such as independent level switches, cannot be overstated.

The best way to detect the level of all hard-to-handle substances is by avoiding physical contact with them. This can be very challenging when those substances are highly agitated, flung through the air space (dust), or produce weak reflections.

OPERATING PRINCIPLES

The following provides a brief review of the various technologies, grouped by sensing characteristics.

Density/Weight

Air bubblers measure the pressure required to force a constant flow of gas down and out the bottom of a tube that is immersed in the process. This is proportional to the length of the submerged tube times the specific gravity of the process liquid.

Differential-pressure (d/p) transmitters measure differential pressure between the bottom of a tank and some higher point, usually the top. Output is the product of level and specific gravity, which equates to weight only in straight-sided tanks.

Diaphragm (continuous) transmitters are essentially the same as d/p units used on a vented tank, except that they often go into the process liquid. On short spans, the atmospheric reference becomes critical to a submerged sensor.

Displacer transmitters measure buoyant force on the displacer body. The level signal is the length of the displacer body covered by a liquid times the specific gravity of the liquid.

Load cells (See Chapter 7) weigh the entire vessel, so translation to level depends on straight sides and the density of the process material.

Manometers traditionally use a heavier liquid than the process one to produce a short, vertical presentation that represents the process level times its specific gravity. A less obvious manometer effect occurs in standpipes and sight glasses, when temperature differential or changing process composition produces a density differential between the pipe and the tank contents. (No moving parts are employed.)

Radiation (nuclear) transmitters use a multitude of geometric configurations to shoot gamma rays through the process to a detector. The level signal

© 2003 by Béla Lipták

depends on how much gamma is impeded by the process material, and that is a function of density. An often-neglected aspect of this technology is the cost of radioactive source disposal. (No touch is possible, no moving parts are employed.)

Thermal dispersion technologies depend on heat transferred by the process liquid, which is proportional to density and also depends on chemical composition. (No moving parts are employed.)

Conductivity/Dielectric

Capacitance/RF transmitters. These measure RF current flowing from a probe, usually but not necessarily probe-to-ground. Various means of examining and manipulating the RF signal provide a wide spectrum of performance in a variety of applications. This approach is most accurate on conducting process media. (No moving parts are employed.)

Conductance (continuous >2 MHz), sometimes referred to as *antenna loading*. This technique requires an insulated probe and significant distance to ground. It measures the eddy current loss in the area surrounding the probe, which is directly proportional to the volume (level within the electric field) of liquid and also the conductance of the liquid. (No moving parts are employed.)

Conductance (point-DC or low-frequency). When conductive material touches any part of the bare metal probe, it signals HIGH. Above an initial threshold, any conductance value works. Oil coating or disruption of the path to ground (such as a plastic-coated tank) defeats the instrument. (No moving parts are employed.)

Microwave switches. These devices sense the difference in dielectric between gas (1.0) and the process material, generally >2.0. Generally, there is a sender on one side of the vessel and a receiver on the other. (No moving parts are employed.)

Radar. Various types of antennas are used to generate an electromagnetic pulse or wave (moving at the speed of light), which is reflected by an abrupt change in dielectric constant. Numerous electronic schemes are used to determine the distance that the reflection represents. (No touching, no moving parts are employed.)

TDR (time domain reflectometry). In this case, the instrument sends an electromagnetic wave or pulse (at the speed of light) down a probe, and the pulse is reflected by the process. It is possible to sense more than one reflection point, allowing the measurement of total level and interface with a single instrument. As with radar, various techniques are used to determine what distance the reflections represent. (No moving parts are employed.)

Mechanical Contact

Diaphragm (point). This is primarily a sensor for granular solids. Movement of the diaphragm, caused by process granulars (S.G. >0.5) pressing on it, closes a mechanical switch. A more sensitive version employs an electrically excited, vibrating diaphragm that is damped by the presence of process solids. The resulting electrical change is used to switch a relay.

Dip stick. This is the world's oldest level measurement technology. It can involve the use of a stick or a tape, with or without a sensitive paste, to determine the level of a specific liquid. It is highly labor intensive.

Floats (cable connection). The mechanics of cable retraction and hang-up due to various causes are the biggest problem. When the equipment is new, it provides excellent accuracy in storage applications.

Floats (inductively coupled). Inductive sensing of float location eliminates the cable mechanics, but float hang-up is still a problem in some applications. Accuracy in storage applications is excellent.

Floats (magnet/reed relay). The switches employed require no power. Floats can hang up or sink, but there is no problem with mechanical connections. The resolution of transmitters is limited by number of reed switches per foot.

Floats (magnetostrictive pulse sensing). This is much like the inductive float position sensing, except the permanent magnet in the float produces the reflection of a magnetostrictive pulse in a physically isolated, ferromagnetic tape.

Paddlewheel (point). A rotating paddle in a dusty atmosphere has an inherent failure mechanism. It can be used only in granular solids. The presence of material stops the paddle's motion, causing a change in motor current and relay closure.

Plumb bobs (yo-yos). Dust buildup on the cable, dust in the bearings, and potential for trapping the plumb bob under incoming solids have made this long-time standard obsolete. It is used only for granulars.

Resistance tape. This is an accurate but delicate sensor for liquid storage tanks. The mechanical force from the measured liquid shorts out the submerged segment of the top-to-bottom precision resistor. Changes in density have a minor effect.

Sonic/ultrasonic. Most of these switches use a sonic path across a gap of selected width. The presence of gas bubbles or solid particles in the gap can interfere with their operation. The transmitters are quite accurate but require a consistent speed of sound in the "air" space, freedom from spurious echoes, and a process material that produces a strong sonic reflection. Condensation and dust buildup on the transducer are problematic. The transmitter won't work in vacuum. Frequencies are selected for

© 2003 by Béla Lipták

the application, not the range of human hearing. All these instruments are "sonic," but not all are "ultrasonic." (No continuous touch is involved, and no moving parts are employed.)

Vibration (point). Using a fork or a single vibrating rod, these devices are now available for solids or liquids. They operate on a modification of the vibration character, switching a relay when submerged in the process material. Coating and packing materials can be a problem. They tend to be delicate because of the sensitivity required.

Optical

Lasers. Lasers constitute the best way to measure coal in silos. They are not susceptible to spurious reflections as are radar and sonic devices. They require a clear optical path and reflectance rather than transmittance from the process material. (No continuous touch is involved, and no moving parts are employed.)

Optical (photocell) switches. Generally, these are quite limited by coating and temperature. An optical switch has the virtue of isolation from the process material but requires that the isolating medium be optically and process compatible. (No continuous touch is involved, and no moving parts are employed.)

Level (sight) gauges. A sight gauge is a simple mechanism with complex limitations. Liquids that coat obscure the actual level. The level indication most trusted by operators ("seeing is believing"). A temperature differential between the tank and glass, a classic boiler glass problem, causes incorrect indication. (No moving parts are employed.)

TANK ACCESS

Existing tanks often present a challenge to placing the measuring instrument in the correct location to perform properly. Glass-lined and coded pressure vessels provide no possibility of adding or enlarging any penetrations. If an external standpipe proves to be troublesome as a result of plugging or thermal differential, the level instrument needs direct access to the tank. The simplest possibility is to place a spare nozzle of sufficient diameter and short length on top of the tank. Failing that, there is always a chance of "teeing" into the vent pipe or pressure relief line. If there is a manway on top of the tank, the cover can be removed and a nozzle welded on in the shop. There are ways to sneak a continuous sensor into a tank from a side nozzle, but this usually entails a bit of plumbing ingenuity and customarily reduces the maximum height that can be measured. Obviously, a d/p transmitter can be mounted on a tank bottom nozzle, but it could also accept an RF probe mounted upside down. Most switch technologies have provision for vertical or horizontal entry. The refining and fuel storage industries are competent to "hot-tap" a tank while the level is above the new nozzle. This approach definitely requires a sensor that can be inserted through a block valve under pressure.

For new tanks, regardless of the level transmitter selected, a wise precaution is to add a spare 8-in. (200-mm)* and a spare 2-in. (50-mm) nozzle to the top of the tank. If there is a problem in the measurement, or whenever the process is modified, this will allow the installation of nearly any level transmitter. The smaller nozzle allows for the addition of an overfill switch. The nozzle length should be as short as possible (4 to 6 in. or 100 to 150 mm) as compatible with required bolting space.

APPLICATIONS

Level measurement applications can be broadly grouped in terms of service as *atmospheric vessels* and *pressurized vessels*. With the exception of liquefied gases, accounting-grade measurements are made in atmospheric vessels. These are a quantum leap in precision from the *process control* or *material scheduling* class of measurement.

Atmospheric Vessels

Liquid level detection in atmospheric vessels rarely presents a serious problem. The most common problems are caused by high temperature or heavy agitation. Instrumentation generally can be selected and installed so that it is removable for inspection or repair without draining the vessel. With few exceptions, a level indicator located at eye level, combined with the available digital communication technologies, eliminates the necessity for the operator or instrument technician to climb the vessel. Most of the transmitters (with the exception of d/p types) are available as top-mounted designs, eliminating the possibility of a spill if the instrument or nozzle corrodes or ruptures. Most vented-to-atmosphere vessels can be manually gauged. It is always comforting to know that such a simple procedure as manual gauging is available to calibrate or verify an instrument output. Various float types can be used in low-volume storage tanks, underground tanks, transport tankers, and other applications outside of the processing area.

Solids level measurement also is generally done in atmospheric tanks, but, in this case, the specifier has fewer available level detecting devices and less installation flexibility. Devices that are suitable for point level detection of solids include the capacitance/RF, diaphragm, rotating paddle, radiation, vibration, microwave, and optical types. Some level switches must be located at the actuation level; this can lead to accessibility problems. Except for the radiation-type device, it also means that a new connection must be provided

* Or 4-in. (100-mm) in horizontal cylinders.

© 2003 by Béla Lipták

if the actuation point is raised or lowered. Paddle, vibration, and RF sensors can be extended at least 10 ft (3 m) from the top, and RF allows the switching point to be adjusted electrically. Solids that behave unpredictably can cause serious measurement problems. If the solid is not free flowing, sensing should be limited to an area beyond the expected wall buildup. If it can bridge or rat-hole, particular care must be taken in the location and installation of the level switch.

Continuous level measurement of solids can be made by yo-yo (automatic plumb-bob), laser, nuclear, RF, TDR, radar, and sonic instruments. The yo-yo was formerly most popular, but its problems with its moving parts in dusty bins have spurred the use of stationary devices. These designs are generally top mounted, but all can be equipped with ground-level or remote readouts. Density variation and angle of repose are inherent in the granular solids. Both can cause inaccuracy of the level measurement, which is a substantial multiple of the instrument's laboratory error specification. As with the switches, good performance requires that the solids be free flowing. These measurements will all be suitable for *material scheduling* functions. If an *inventory* grade measurement is required (definitely a weight measurement), load cells are used. Load cells are covered in Chapter 7.

Pressurized Vessels

Point level detection of liquids in a pressurized vessel can be made using one of ten types of level sensors. For clean services in industrial processing plants, preference has traditionally been given to the externally mounted displacer switch. This unit is rugged and reliable, it has above-average resistance to vibration, and its actuation point can be easily changed over a limited range. There are a number of cases in which microwave, sonic, capacitance, and float switches are considered if they are installed so that they can be removed for repair without venting the vessel to the atmosphere. Conductivity switches are used in water services to 700°F (370°C) and 3000 PSIG (21 MPa). Optical and thermal dispersion switches have no moving parts, are inexpensive, and are used on clean services.

Continuous liquid level detection in pressurized vessels is subdivided into clean and hard-to-handle processes. For clean services requiring local indication only, the traditional choice is the armored sight gauge. Even when a transmitted signal is required, many users specify that transmitters be backed up with a sight gauge for use in calibration and to allow that the process can run manually if the transmitter is out of service. Nevertheless, the need for a sight gauge should be carefully evaluated, as it can be a weak point (personnel hazard) in high-pressure processes and can become plugged in sludge and slurry services. In hazardous services, magnetic-float level gauges can be used.

Preferences for clean service transmitters vary from industry to industry. Petroleum refiners have traditionally preferred the externally mounted displacer transmitter but have recently discovered that much related maintenance and rebuilding can be avoided by using electronic sensing. The existing rugged "cages" can be retrofitted with lower-maintenance instruments. Strength is important in the petroleum industry, because a break at the instrument connection could cause a hydrocarbon spill above the autoignition temperature. The low-side (vapor-phase) connection of these cages does not require a chemical seal. This reduces maintenance requirements and eliminates possible inaccuracies that a d/p transmitter might produce. Most refinery processes are compatible with carbon or alloy steel materials, which are readily available in all sensor designs.

In other chemical processing industries, first consideration usually goes to the d/p transmitter when a level signal is required. It is reliable and accurate (provided that specific gravity is constant), and many modifications are available for unique services. The major problem with the d/p transmitter, when used for level measurement on pressurized vessels, is in handling the low-pressure tap. If the low side of the d/p cell can be connected directly to the vapor space of the vessel, the problem is eliminated, but this is rarely the case. Normally, the low-pressure leg must be filled with a seal oil or with the process material. If a seal oil is used, the oil must be compatible with the process. If the leg is filled with the process material, the process fill must not boil away at high ambient temperatures. In either case, ambient temperature variations will change the density of the fill, which can cause inaccuracies in the level reading. The liquid seal also requires frequent inspection. Low-pressure-side repeaters and chemical seals are also available, but although they eliminate the seal problem, they introduce inaccuracies of their own and increase the purchase cost. Despite this, d/p cells are successfully used in a wide range of applications and can be considered whenever the span to be measured is greater than 60 in. (1.5 m). Other devices, such as capacitance/RF, nuclear, sonic, radar, and TDR technologies, are in use for level measurement in pressurized vessels, especially where level indication must be independent of density.

Accounting Grade (Tank Gauging)

Accounting-grade measurements are made in both atmospheric and pressurized vessels. The need for accuracy in accounting-grade installations can be demonstrated as follows. A typical 750,000-barrel American Petroleum Institute (API) storage tank has a diameter of 345 ft (105 m), and it takes some 8000 gallons (30 m^3) to raise the level 1 in. (25 mm). A level measurement error of 1 in. (25 mm) would therefore indicate that 8000 gallons (30 m^3) have been gained or lost. In the case of hydrocarbon storage tanks, the accumulation of water at the bottom must be factored into the measurement, or errors equivalent to several inches of product could result. This is no small matter, particularly if the level measurement is used as a basis for custody transfer of the product. Substantial effort has been put into the development of storage

© 2003 by Béla Lipták

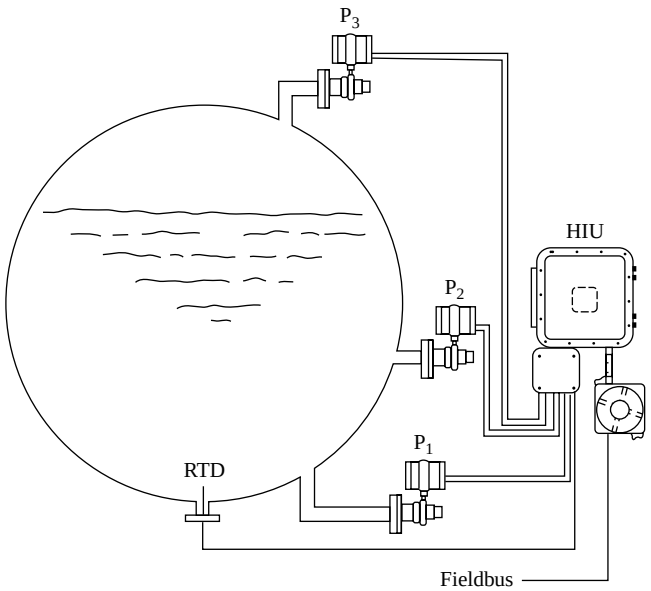

FIG. 3.1d
A Hydrostatic Tank Gauge applied to a pressurized, spherical tank. (Courtesy of The Foxboro Co.)

tank gauging systems that have good reliability, high accuracy, and high resolution. These efforts have been relatively successful, and the user can be confident of obtaining satisfactory results if adequate attention is given to installation details. Every bit as critical as the instruments installed is an accurate, up-to-date *strapping table.* Because tanks settle and sag over time, it should be updated after the first two years of service. Tanks that are 20 years old often use a strapping table that was created before they saw the first batch of product.

The use of differential-pressure transmitters (Figure 3.1d) for hydrostatic tank gauging (HTG) is one of the popular methods to make these high-accuracy measurements. Pressure 1 minus pressure 2 ($P_1 - P_2$) divided by the distance between them produces the density information. The pressure P_1 is divided by the density to obtain the level. The level is entered into the strapping table for the particular tank to obtain the volume of liquid. In the case of nonvented tanks, P_3 is subtracted from P_1 before making the division by density. Although it is often neglected, the water level beneath the organic should be entered into the strapping table, and the resulting volume subtracted to obtain net product volume.

Radar is another favored technology for obtaining the 0.125-in. (3-mm) accuracy usually required for these applications. In that method, the actual level is measured directly and entered into the strapping table to obtain volume. This may appear to be a more straightforward approach, but measuring to this accuracy from the top of a tall tank has other mechanical considerations such as roof deflection and thermal tank expansion. The float and servo-operated plumb bob that were formerly the top-mounted standards are being replaced by these newer technologies. For custody transfer, dip tapes are still probably the most common measurement. The manual approach has the advantage of measuring the water under organic products at relatively minor additional cost. In this case, the inaccuracy risk is the very real possibility of human error, either in the measurement itself or in the volume abstracted from the strapping table.

Sludge and Slurries

A number of level-switch designs are suited for hard-to-handle service in pressurized vessels. In making a selection, one would first decide if a penetrating design is acceptable (Figure 3.1e). The use of such a level switch usually implies that the tank will have to be depressurized, or sometimes even drained, when maintenance is required. If penetration is not allowed, then only nuclear, clamp-on sonic, or microwave (for fiberglass or plastic tanks) devices can be considered.

When a level transmitter is selected for a hard-to-handle service, the radiation type or the load cell might seem to be obvious choices, but licensing and regulatory requirements in the case of radiation, and high costs of both, tend to make them choices of last resort. The installation cost of load-cell systems can be reduced by locating the strain gauge elements directly on the existing steel supports (Figure 3.1f). There are, of course, applications in which almost nothing can be used other than such expensive devices as the nuclear-type level gauge. One example of such an application is the bed level in a fluidized-bed type of combustion process. If the accuracy of purging taps is insufficient, there is little choice but to use radiation gauges.

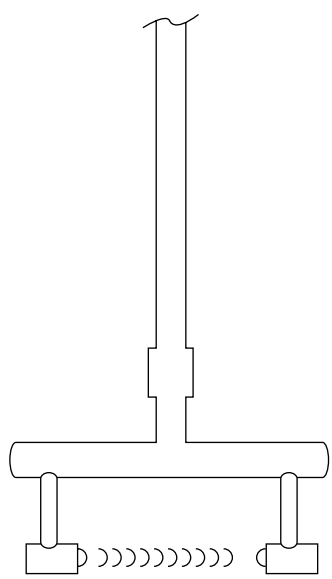

FIG. 3.1e
An optical or sonic gap switch for water/sludge interface. (Courtesy of Thermo MeasureTech.)

© 2003 by Béla Lipták

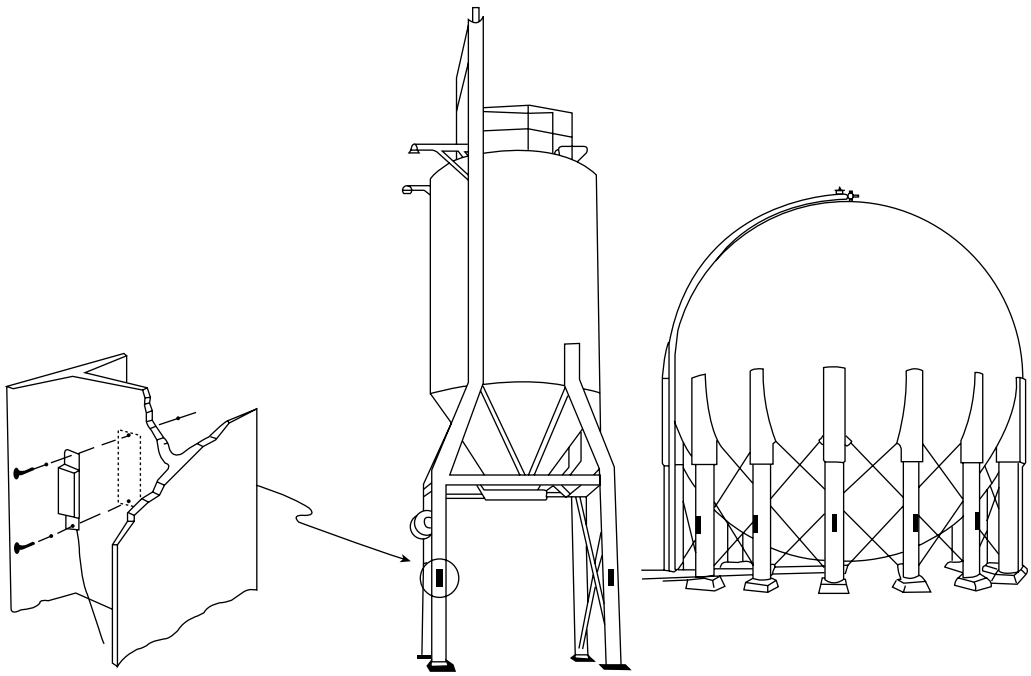

FIG. 3.1f
Steel support-mounted strain gauges (see Chapter 7) can be calibrated by measuring the output when the tank is empty, and again when it is full. (Courtesy of Kistler-Morse.)

On slurry and sludge services, d/p units are most likely to exhibit large errors due to density variation. The required extended-diaphragm type of differential pressure transmitter eliminates the dead-ended cavity in the nozzle where materials could accumulate and brings the sensing diaphragm flush with the inside surface of the tank. The sensing diaphragm can be coated with TFE to minimize the likelihood of material buildup. One of the best methods of keeping the low-pressure side of the d/p transmitter clean is to insert another extended diaphragm device in the upper nozzle. This can be a pressure repeater (Figure 3.1g), which is capable of repeating either vacuums or pressures if it is within the range of the available vacuum and instrument air supplies. Outside of these pressures, extended-diaphragm types of chemical seals can be used (Figure 3.1h) if they are properly compensated for ambient temperature variations and sun exposure. Other level transmitters that should be considered for hard-to-handle services include the capacitance/RF, laser, radar, sonic, and TDR types. Foaming and surface disturbances due to agitation tend to interfere with the performance of radar, laser, and sonic units. Capacitance probes and TDR probes stand a better chance of operation in these services. They can withstand some coating or can be provided with probe cleaning or washing attachments. Radar transmitters perform accurately and reliably on paper pulp and other applications that coat and clog.

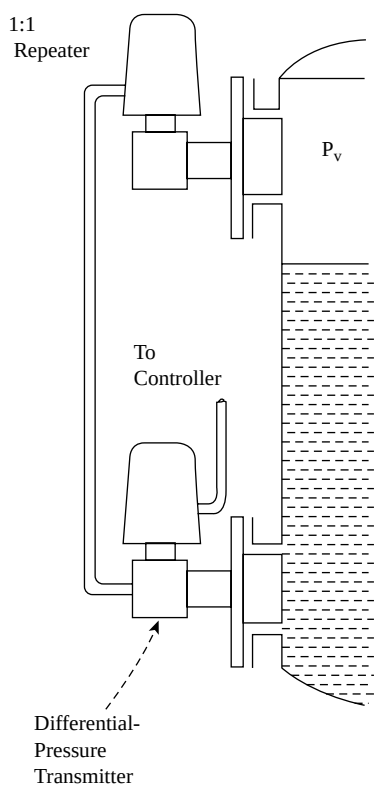

FIG. 3.1g
The clean and cold air output of the repeater duplicates pressure (P_v) of the vapor phase.

Foaming, Boiling, and Agitation

In unit operations such as strippers, the goal is to maximize the rate at which the solvents are boiled off against the constraint of foaming. In other processes, the goal is to maintain

© 2003 by Béla Lipták

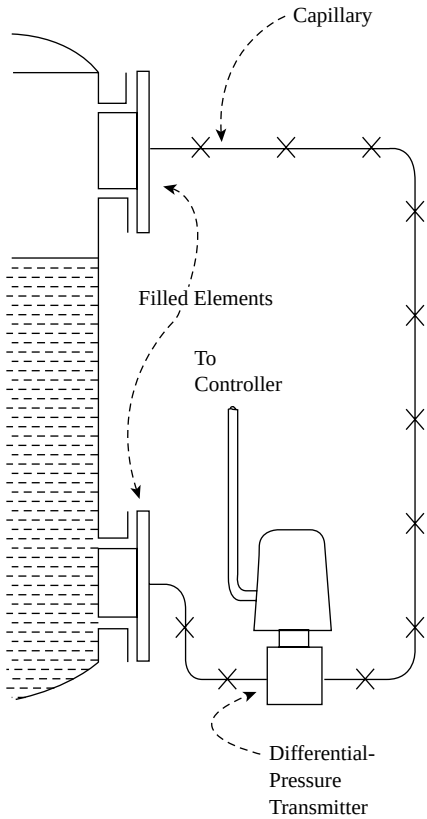

FIG. 3.1h
Chemical seals with temperature compensation and extended diaphragm protect a d/p transmitter from plugging and chemical attack.

a controlled and constant thickness of foam. In these types of processes, one must detect both the liquid–foam interface and the foam level. The detection of the liquid level below the foam is the easier of the two level-measurement tasks, because the density of the foam tends to be negligible relative to the liquid. A d/p transmitter installation (Figure 3.1h) will measure the hydrostatic weight of the foam, disregarding most of its height. Different industries tend to use different sensors for measuring the foam–liquid interface. In Kraft processing, for example, radiation detectors are used to detect that interface in the digester vessel. RF (capacitance) and TDR transmitters and conductance and RF switches make excellent foam level measurements as long as the foam is conductive (in fact, only very specialized RF switches can differentiate between conductive foam and liquid).

The continuous measurement of insulating foam level is more difficult and, for that reason, some people will circumvent its measurement by detecting some other process parameter that is related to foaming. These indirect variables can be the vapor flow rate generated by the stripper, the heat input into the stripper, or just historical data on previous batches of similar size and composition. If direct foam level measurement is desired, it is easier to provide a point sensor than a continuous detector. Horizontal RF switches generally operate successfully if density is sufficient to produce a dielectric constant in the foam that is greater than 1.1 (vacuum and gases are 1.0). In the case of heavier foams, vibrating or tuning fork switches and beta radiation gauges have been used; in some cases, optical or thermal switches have also been successful.

Boiling will change the hydrostatic weight of the liquid column in the tank due to variable vapor fraction. As the rate of boiling rises, the relative volume of bubbles will also increase, and therefore the density will drop. Density rises as the rate of boiling is reduced. Density also varies with level as bubbles expand on the way up. Therefore, the measurement of hydrostatic head alone can determine neither the level nor the mass of liquid in the tank. This problem is common when measuring the water in nuclear, boiling-water reactors (BWRs) or in the feedwater drums of boilers. High-temperature capacitance/RF transmitters can do the feedwater job, but the fluorocarbon insulation is not applicable to nuclear reactors. A standpipe with a series of 10 to 20 horizontal conductance sensors is very common in these applications. If only level indication is required, then the refraction-type level gauge is sufficient, given that it shows only the interface between water and steam. These "external" strategies require the temperature to be equal with the tank to be useful.

Some agitators prevent the use of probe-type devices, because they leave no room for them, and they also challenge the use of sonic and radar transmitters unless programmed to ignore the agitator blades and sense the rough surface. Glass-lined reactors are a classic enemy of probes, as they usually have heavy agitation, and the lining prevents support or anchoring. A probe, broken due to fatigue, can cause very expensive damage in these vessels. Radar transmitters with "tank mapping" software are quite suitable as long as the dielectric constant is greater than 2 (most common). Agitation usually does not affect the performance of the displacer and d/p-cell-type level sensors, which are external to the tank. They can measure level in the special case, where the specific gravity is constant. Of the two, the d/p cell is preferred, because it is looking at the liquid inside the tank and not in an external chamber, where its temperature and therefore its density can be different. Of course, the primary reason for heavy agitation is to keep unlike components mixed, which implies variable specific gravity.

Interface Measurement

When detecting the interface between two liquids, we can base the measurement on the difference of densities (0.8:1.1 is a typical ratio), electrical conductivity (1:1000 is common), thermal conductivity, opacity, or sonic transmittance of the two fluids. Figure 3.1i illustrates the difference in typical separator response between the conductivity sensors and the density sensors. One should base the measurement on whatever process property gives the largest stem change between the upper and the lower fluid. If, instead of a clean interface,

© 2003 by Béla Lipták

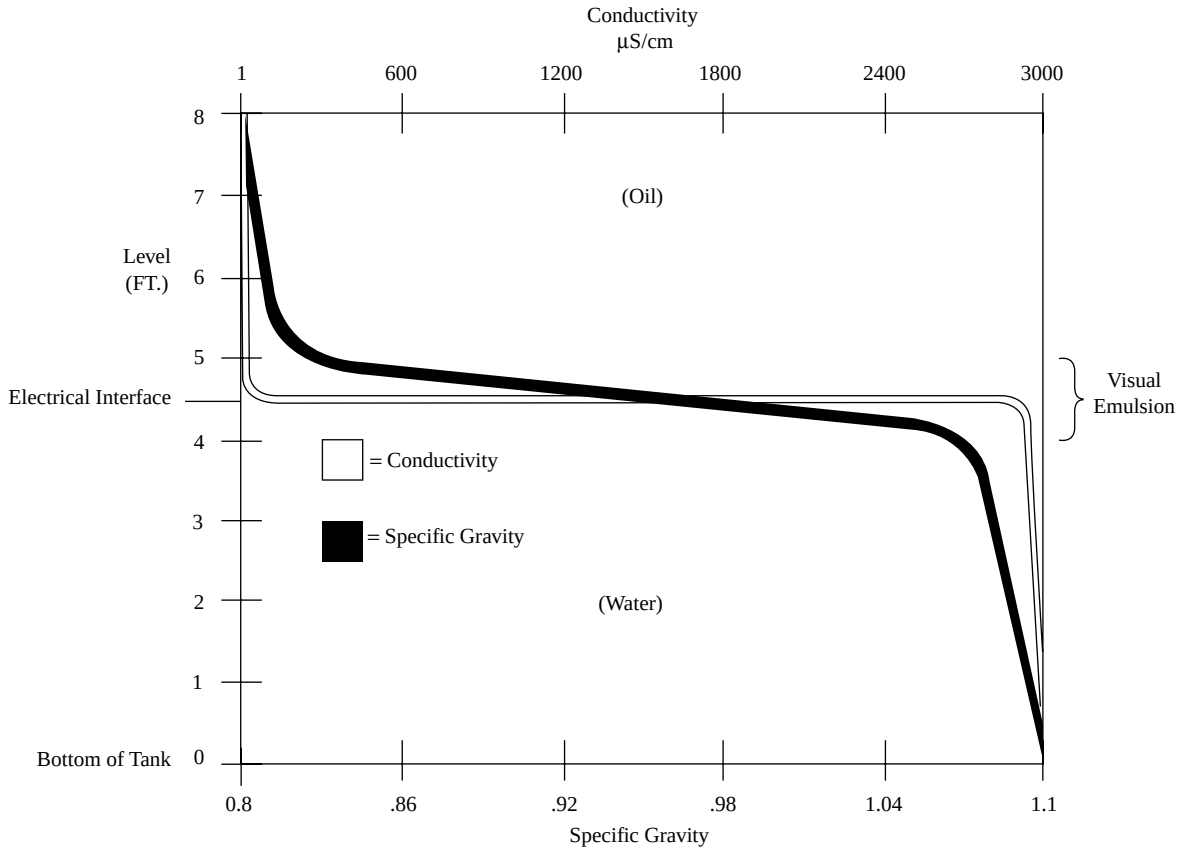

FIG. 3.1i

Graph of density (bubblers, d/p, displacer, nuclear) and conductivity (capacitance, conductance, TDR) versus level in a typical heavy crude/water separator.

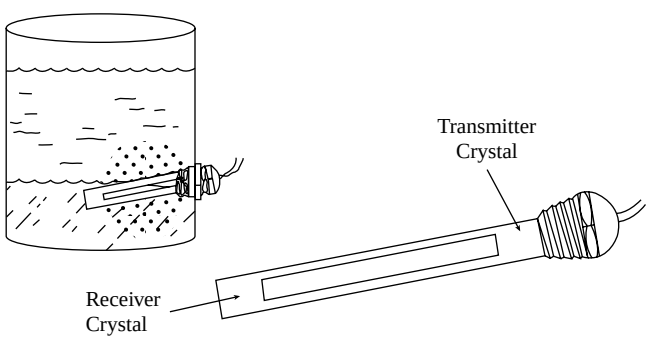

FIG. 3.1j

Sonic interface level switch. (Courtesy of Thermo MeasureTech.)

there is a *rag layer* (an emulsion of the two fluids) between the two fluids, the interface instrument cannot change that fact (it cannot eliminate the rag layer). If the separator and its control system are properly designed, the emulsion can be kept out of both separated products.

Interface-level switches are usually of the optical (Figure 3.1e), capacitance, displacer, conductivity, thermal, microwave, or radiation designs. The unique sonic switch described in Figure 3.1j utilizes a gap-type probe that is installed at a 10° angle from the horizontal. At one end of the gap is the ultrasonic source, and at the other is the receiver. The instrument depends on the acoustic impedance mismatch between the upper and lower phases. When the interface is in the gap, it will attenuate the energy of the sonic pulse before it is received at the detector. This switch is used in detecting the interface between water and oil or other hydrocarbons. Of course, this is no way to control the interface, because, once outside, it could be above or below the gap. It is suitable as a backup to an interface control system.

D/P transmitters can continuously detect the interface between two liquids, but, if their density differential is small, it produces only a small pressure differential. Changes in density typically produce 5 to 10 times the error on an interface calibration that they do on a single-liquid calibration. A major limitation is that the range of interface movement must cause a change that is as great as the minimum d/p span. If the difference in conductivity is at least 100:1, such as in case of the dehydrating of crude oil, continuous capacitance or TDR probes make excellent interface transmitters. Interface between two insulating liquids (a rare situation) can be accomplished with TDR but is unreliable using capacitance. Sonic transducers lowered into the brine layer of oil or liquefied gas storage caverns (Figure 3.1k) can measure the interface

© 2003 by Béla Lipták

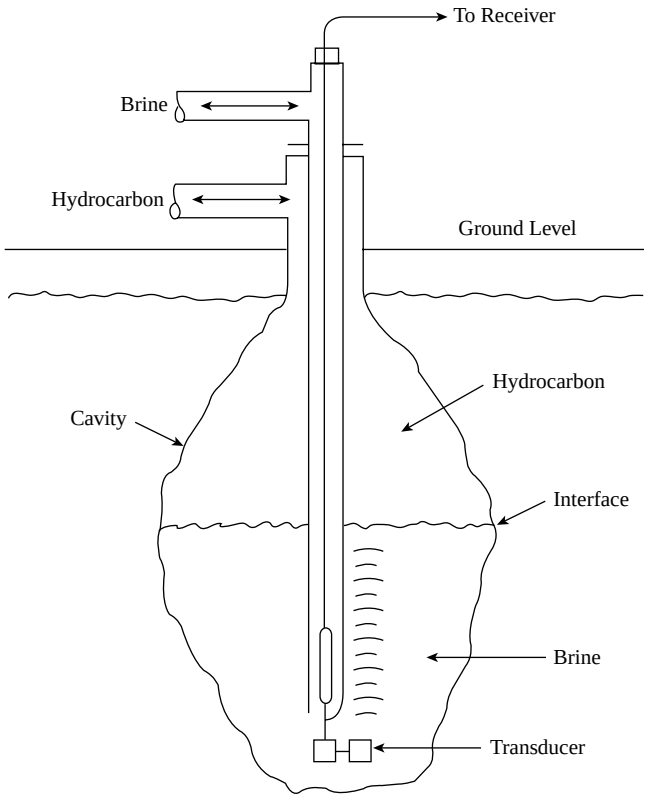

FIG. 3.1k
A unique, bottom-up, sonic interface measurement.

between brine and hydrocarbon by shooting up from the bottom.

On clean services, float and displacer-type sensors can also be used as interface-level detectors. For the float-type units, the trick is to select a float density that is heavier than the light layer but lighter than the heavy layer. With displacer-type sensors, it is necessary to keep the displacer flooded with the upper connection of the chamber in the light liquid phase and the lower connection in the heavy liquid phase. By so doing, the displacer becomes a differential density sensor and, therefore, the smaller the difference between the densities of the fluids, and the shorter the interface range, the smaller the force differential produced. To produce more force, it is necessary to increase the displacer diameter. The density of the displacer must be heavier than the density of the heavy phase.

In specialized cases, such as the continuous detection of the interface between the ash and the coal layers in fluidized bed combustion chambers, the best choice is to use the nuclear radiation sensors.

Liquid/solid interface measurements are extremely demanding, and the only general successes have been achieved with nuclear or sonic sensing. The sonic sensor must always be submerged, because a gas phase will either disrupt the measurement entirely or appear to be the solid. In special noncoating cases, optical sensors have worked without frequent cleaning.

Bibliography

Akeley, L. T., Eight ways to measure liquid level, *Control Eng.*, July 1967.

Andreiev, N., Survey and guide to liquid and solid level sensing, *Control Eng.*, May 1973.

API Guide for Inspection of Refinery Equipment, Chapter XV, Instruments and Control Equipment, American Petroleum Institute, Washington, DC.

API Recommended Practice 550, *Manual on Installation of Refinery Instruments and Control Systems*, Part I, Process Instrumentation and Control, Section 2, Level, American Petroleum Institute, Washington, DC.

Bacon, J. M., The changing world of level measurement, *InTech*, June 1996.

Bahner, M., Level-measurement tools keep tank contents where they belong, *Environ. Eng. World*, January–February 1996.

Bahner, M., A practical overview of continuous level measurement technologies, *Flow Control*, June–July, 1997.

Bailey, S. J., Level sensors 1976, a case of contact or non-contact, *Control Eng.*, July 1976.

Belsterling, C. C., A look at level measurement methods, *Instrum. Control Syst.*, April 1981.

Berto, F. J., Technology review of tank measurement errors reveals techniques for greater accuracy, *Oil & Gas J.*, March 3, 1997.

Boyes, W. H., The changing state of the art of level measurement, *Flow Control*, February 1999.

Buckley, P. S., Liquid level measurement in distillation columns, *ISA Trans.* 12(1), 45–55, 1973.

Caldwell, A. B., Process control series: liquid and solid level sensors, *Eng. Mining J.*, May 1967.

Carsella, B., Popular level-gauging methods, *Chemical Process.*, December 1998.

Cho, C. H., *Measurement and Control of Liquid Level*, ISA, Research Triangle Park, NC, 1982.

Considine, D. M., Process instrumentations; liquid level measurement systems; their evaluation and selection, *Chemical Eng.*, February 12, 1968.

Considine D. M., Fluid level systems, in *Process/Industrial Instrumentation and Control Handbook*, 4th ed., McGraw-Hill, New York, 1993, 4.130–4.136.

Control level under fouling conditions, *Hydrocarbon Processing*, November 2000.

Cornane, T., Continuous level control, *Measurement and Control*, April 1997.

Cusick, C. F., Liquid level measurement, *Instrumentation*, 22(1), 22–7, 1969.

Early, P., Solving old tank gauging problems with the new hydrostatic tank gauging technology, *Adv. Instrum.*, 42, 1987.

Ehrenfried, A., Level gaging, *Meas. Control*, April 1991.

Engineering Outline; level measurement, *Engineering*, October 6, 1967.

Entwistle, H., Survey of Level Instruments, ISA Conference, Anaheim, CA, Paper #91-0484, 1991.

Felton, B., Level measurement: ancient chore, modern tools, *InTech*, August 2001.

Glenn, L. E., Tank gauging—comparing the various technologies, in *ISA Conf. Proc.*, Anaheim, CA, Paper #91–0471, 1991.

Hall, J., Level monitoring; simple or complex, *Instrum. Control Syst.*, October 1979.

Hall, J., Measuring interface levels, *Instrum. Control Syst.*, October 1981.

How can we measure level of petroleum sludge? *Control*, August 1999.

Hughes, T. A., *Measurement and Control Basics*, 3rd ed., ISA, Research Triangle Park, NC, 2002.

ISA Directory of Instrumentation, ISA, Research Triangle Park, NC.

Johnson, D., Taking your lumps, *Control Eng.*, June 1995.

Johnson, D., What the devil is that level, *Control Eng.*, June 1996.

Johnson, D., Doing your level best, *Control Eng.*, August 1997.

Johnson, D., Process instrumentation's utility infielder, *Control Eng.*, November 1998.

Johnson, D., Checking level: not glamorous, sometimes dangerous, but necessary, *Control Eng.*, August 2001.

Johnson, D., Level sensing in hostile environments, *Control Eng.*, August 2001.

© 2003 by Béla Lipták

King, C. and Merchant, J., Using electro-optics for non-contact level sensing, *InTech*, May 1982.
Koeneman, D. W., Level among layers (accurately determining interface), *Control Eng.*, August 1998.
Koeneman, D. W., Evaluate the options for measuring process levels, *Chemical Eng.*, July 2000.
Lanini, L. and Schneider, L., The dawn of new tank gauging system, *Adv. Instrum.*, 42, 155–161, 1987.
LaPadula, E. J., Level measuring methods, *ISA J.*, February 1965.
Lawford, V. N., How to select liquid-level instruments, *Chemical Eng.*, October 15, 1973.
Lerner, J., Continuous level measurement: an introduction to 16 basic types, *Control*, November 1990.
Lerner, J., Selecting a continuous level measurement system for your operation, *Powder and Bulk Solids*, 19, March 1991.
Level measurement and control, *Meas. Control*, 142–161, April 1999.
Liptak, B. G., Instrumentation to measure slurries and viscous materials, *Chemical Eng.*, January 30, 1967.
Liptak, B. G., On-line instrumentation, *Chemical Eng.*, March 31, 1986.
Merritt, R., Level sensors for custody transfer? *Control*, November 2001.
Nyce, D. S., Tank gauging advances, *Fuel Technology Management*, January 1997.
Owen, T., Overcoming obstacles in solids level measurement, *Control*, February 1998.
Paris, T. and Roede, J., Back to basics, *Control Eng.*, June 1999.
Parker, S., Selecting a level device based on application needs, in *1999 Fluid Flow Annual*, Putman Publishing, Itasca, IL, 1999, 75–80.
Paul, B. O., Seventeen level sensing methods, *Chemical Process.*, February 1999.
Sholette, W., Pick the proper level measurement technology, *Chemical Eng. Progress*, October 1996.
Van de Kamp, W., *The Theory and Practice of Level Measurement*, 17th ed., Endress+Hauser, Greenwood, IN, 2001.
Waterbury, R. C., Liquid level measurement 101, *Control*, November 1998.

© 2003 by Béla Lipták

3.2 Bubblers

D. S. KAYSER (1982) **B. G. LIPTÁK** (1969, 1995)
C. G. LANGFORD (2003)

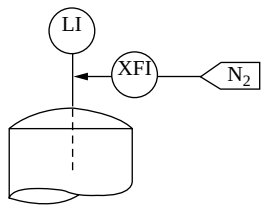

Flow Sheet Symbol

Application	Level, interface, and density; open or closed, pressurized tanks and vessels
Operating Pressure	Limited only by the pressure of the available purge gas supply
Operating Temperature	As required; limited only by materials in contact with the process; has been used on such high-temperature processes as coal gasification
Materials	Limited only by the availability of exposed pipe materials
Costs	$200 for the simplest local indicator installation, can reach $5000 for installations requiring special materials and remote transmission
Inaccuracy	Function of error in the readout and other parts used, ±0.05% to ±2.0% of full scale
Range	Unlimited as long as purge gas supply pressure exceeds that of the process
Partial List of Suppliers	Bubbler-type level detector packages can be assembled from components described in other sections, such as variable area flowmeters described in Section 2.27, various types of pressure sensing and display devices described in Chapter 5
Prepackaged bubbler assemblies are also available from	Aalborg Instruments & Controls (www.aalborg.com) ABB Fischer & Porter (www.abb.com) Blue-White Industries (www.bluwhite.com) Brooks Instrument Div. of Emerson (www.emersonprocess.com) Dwyer Instruments Inc. (www.dwyer-inst.com) Flowmetrics Inc. (www.flowmetrics.com) Krohne America Inc. (www.krohneamerica.com) McMillan Co. (www.mcmillancompany.com) Omega Engineering Inc. (www.omega.com) Porter Instrument Co. (www.porterinstrument.com) U.S. Filter Wallace & Tiernan Inc. (www.usfwt.com)

INTRODUCTION

Many industrial accidents are caused by incomplete or inaccurate level information. Bubblers serve to solve that problem in an inexpensive and reasonably reliable manner. The operation of an air bubbler is similar to blowing air into a glass of water with a straw. The more water is in the glass, the harder one needs to blow. Bubbler-type level sensors have been in use for as long as compressed air has. If the air pressure entering the dip pipe is greater than the hydrostatic head of the process fluid in the tank, the air will bubble out at the bottom of the pipe.

Figure 3.2a illustrates an air bubbler installation for an open (atmospheric) tank with various purge controls. The transmission line should be sloped toward the tank so that, if the purge is lost and process vapors enter the transmission tube, the condensate will drain back into the vessel. If the readout device must be below tank level, a condensate trap can be installed as shown by the dotted line.

The purge supply pressure should be at least 10 PSI (69 kPa) higher than the highest hydrostatic pressure to be gauged. The purge flow rate is kept small and relatively constant at about 1 SCFH (500 cm^3/min), so there will be no significant pressure drop in the dip tube. Usually, the purge

© 2003 by Béla Lipták

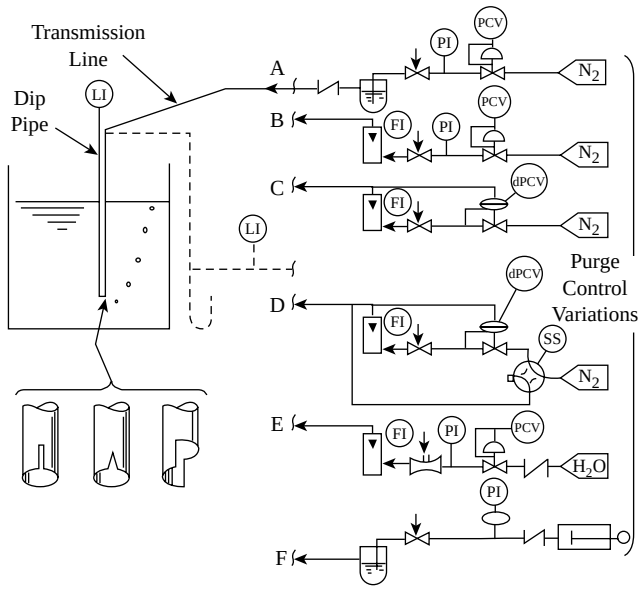

FIG. 3.2a
Variations of air bubblers for atmospheric tanks.

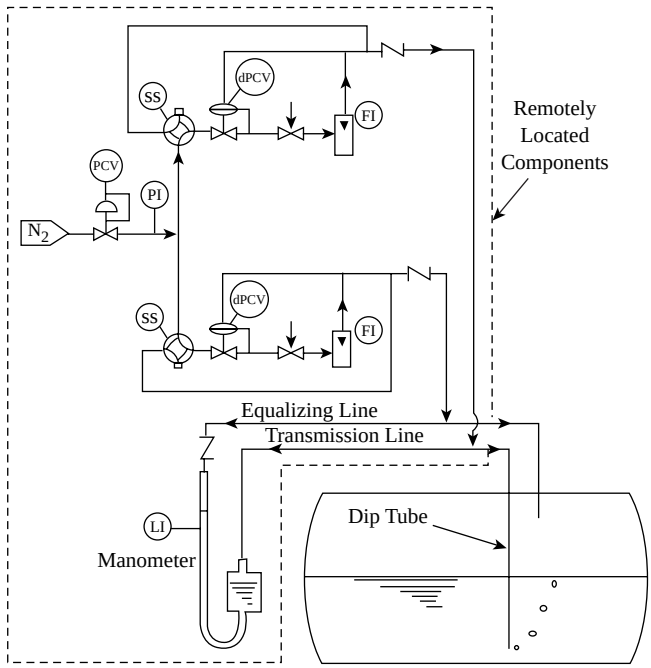

FIG. 3.2b
Air bubbler installation for pressurized tanks.

media is air or inert gas, although liquids can also be used. Several methods of gas purge controls are shown in Figure 3.2a to illustrate some of the installation considerations. In most traditional installations such as system A, nitrogen supply pressure is regulated to a value corresponding to a pressure that is higher than the hydrostatic head when the tank is full. The purge flow rate is adjusted by a needle valve and is sent through a sight feed bubbler, which allows visual inspection of the actual flow. This system allows for detection of levels up to 10 ft (3 m).

If higher levels are to be detected, system B, which uses a rotameter instead of a sight feed bubbler, can be considered, because a rotameter can withstand higher pressures. In systems A and B, as the liquid level varies, the downstream pressure also will vary, thereby causing variations in the purge flow rate.

Since the purge pressure at the readout device is the sum of hydrostatic head and the dynamic pressure drop in the dip tube, variations in purge flow will cause errors. To correct this condition, a differential-pressure control valve can be installed across the fixed restriction of the needle valve as shown in system C. This will cause the purge flow to be uniform regardless of the liquid head.

If the process material can build up or plug the dip tube, either as a result of loss of purge gas or because of the nature of the fluid, an aerator selector switch may be installed as shown on system D to allow for periodic blowing out of the transmission line. System E can be considered in remote locations where gas purge media is not available and a bubbler is desired instead of a liquid purge for level detection. Here, water is jetted across a gap while air is aspirated into the stream and compressed. The air–water mixture enters the dip tube, where the small amount of water runs down the inside of the bubbler tube while the pressure of the escaping air is detected as a measure of level. Such a setup would be in service only when the operator wanted to make a level reading, so the water would not flow into the vessel continuously. System F shows a more common approach for remote bubbler installations where a small hand pump is used to compress the purge air.

For tanks that operate under pressure or vacuum, the installation of a bubbler indicator becomes slightly more complex, because the liquid level measurement is a function of the difference between two bubbler pressures. Because of the differential measurement involved, the readout device can be a manometer or other type of differential-pressure detector. Figure 3.2b shows one of these installations. All of the previously discussed variations apply to both pressure and vacuum installations.

GENERAL

The bubbler detects the hydrostatic pressure in a vessel and displays it in a more convenient location. The pressure of an inert gas is used to transport the level information to this more convenient location. Bubbler-type level detection has been in use since compressed air became available. As illustrated in Figure 3.2c, after the air fills the dip pipe, its pressure inside the dip tube will equal the hydrostatic head of the process fluid outside the dip tube, and the excess air that is introduced will bubble out at the bottom of the tube.

If the tank is not open to the atmosphere, a second pressure tap is required to provide a reference pressure from the vapor space. The dip tube can enter from the top or side of

© 2003 by Béla Lipták

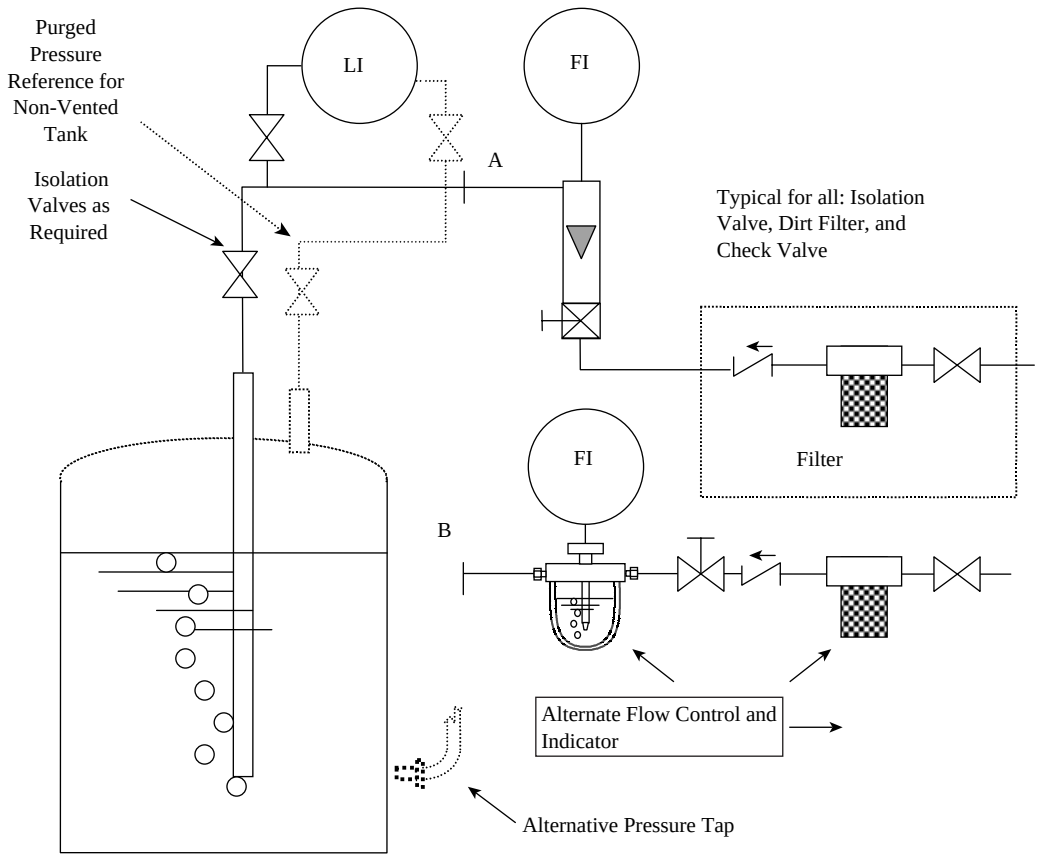

FIG. 3.2c
Bubbler-type level local indicator system.

the tank as long as it extends below the minimum level that is to be detected. As shown in Figure 3.2a, various combinations of valves, check valves, needle valves, and flow indicators may be required for various applications.

Of the bubbler design options, the *blow-back dip tube* is the simplest and usually the least expensive. Here, piping or tubing is provided to bring the purge gas pressure to the level display or transmitter. The bubbler, because of its simplicity, is inexpensive and robust while being easy to maintain or adopt to changing process conditions. The display portion of the system is not wetted by the process fluid and is in a convenient location. Calibration and replacement of the level readout or transmitting devices is also safe and convenient if, before service, the isolating valves (Figure 3.2c) are fully closed, and the standard safety precautions (see Chapter 7) are observed.

If a short dip tube is inserted horizontally in the side of the tank, the dip tube will be easier to access and support. Figure 3.2d illustrates that a tap can be provided for cleaning (*rodding out*) the accumulated deposits. In this design any plugging or dirt accumulation can be mechanically removed by inserting a rod into the dip tube. If it is desired to clean out the dip tube while the process is in operation (or if the tank is full or pressurized), packing glands are provided, and a "captive rod" is permanently installed to allow clearing the dip tube at any time.

Replaceable dip tubes, with or without packing glands, have also been used on the more difficult applications. Other options, such as dual or self-washing purges, will also be discussed later in this section. In addition, jacketed dip tubes are also available and have been successfully used in applications in which condensation or freezing is a concern (Figure 3.2e).

One of the advantages of the bubbler-type level measurement is that their readings are not affected (or affected only very slightly) by foam and by variations in pressure or composition of the vapor space above the liquid. These changes, particularly foaming, can interfere with many other types of level detectors, as was shown in Table 3.1b. On the other hand, process phenomena that change the density of the liquid (bubble formation, boiling) will result in "understating" the level, because a drop in density reduces the hydrostatic head.

Purge Gas

Air and nitrogen are the most commonly used purge gases. Other gases can also be used if, for some reason (such as their available maximum pressure being insufficient), these cannot be used. The measurement itself is as reliable as the availability of the purge gas supply. The flowing gas also

© 2003 by Béla Lipták

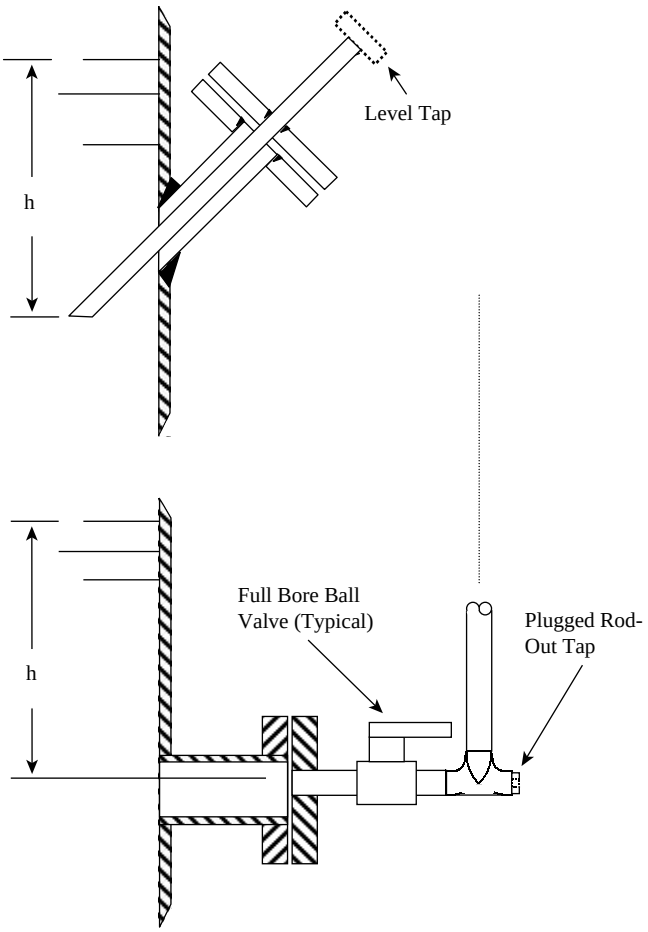

FIG. 3.2d
Side entering dip pipe (tube) installations.

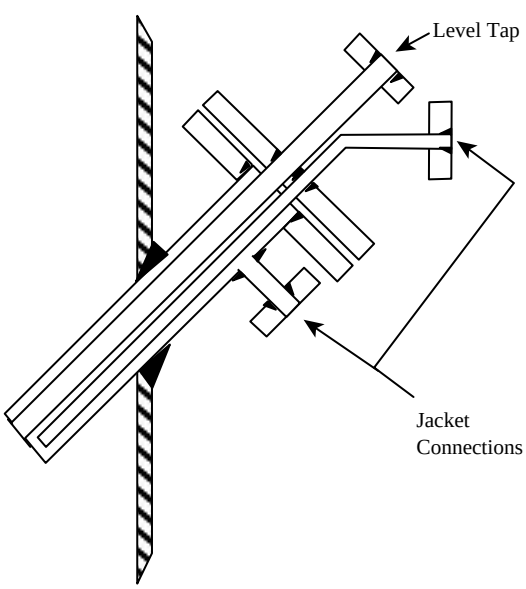

FIG. 3.2e
Jacketed dip pipe (tube) installation.

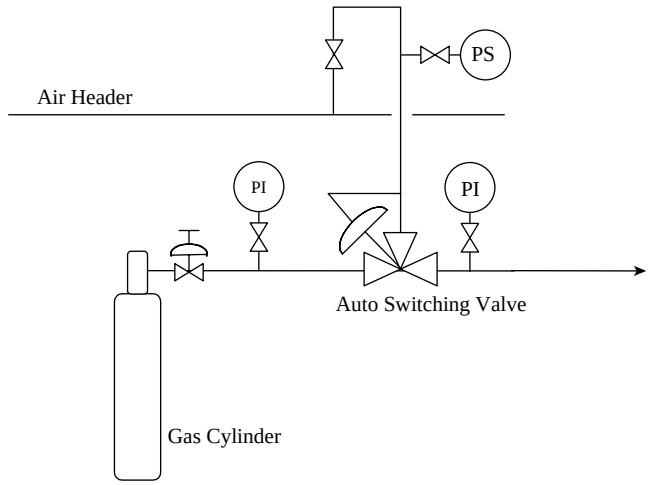

FIG. 3.2f
Purge gas supply system with automatic backup.

serves to keep the inside of the dip tube dry and clean. Proper functioning requires that the purge air or gas pressure be higher than the maximum process pressure plus the maximum friction drop anticipated within the dip tube. Reliability is improved with increasing supply pressures.

Some bubbler-type level packages include an air pump to generate the purge pressure and use a manometer to indicate the level. The danger here is that any loss of air due to air leakage or pump failure will result in a false low-level indication. Therefore, it is more reliable to supply the bubblers from the central air supply of the plant.

For critical applications, bottled gas, typically nitrogen, is used as a backup for the air supply. Pressure-operated pneumatic valves can provide automatic switching of the gas supply without electrical connections (Figure 3.2f). A low-pressure detector switch can also be used and in that case; its contact not only can switch to the backup gas supply, it can also initiate and alarm so that plant operators will be aware of the loss of air.

SIZING CALCULATIONS

The bubbler is fundamentally a mass or weight detector, because the pressure it senses is a function of both the liquid height and density. Therefore, the pressure of the purge gas reflects level only if the liquid density (composition and phase) is constant.

Bubbler applications include level control, inventory management, custody transfer, overflow protection, flow rate smoothing, and pump suction protection. For inventory control or for accounting purposes, the information desired is not the volume but the mass of the liquid. Chemical reactions are also based on mass, and even fuels that are sold to end users by volume (gasoline, fuel oil, natural gas) are often sold commercially by mass. As discussed in Section 3.18, they are sold by

© 2003 by Béla Lipták

"standard" volume, and this apparent volume is corrected for density (or temperature) difference from the standard.

A narrow-range dip tube mounted near the top of a tank can provide accurate overflow protection because, over that small range, the density correction is insignificant.

Mass and Level

Level is inferred from the pressure (H) measured by the bubbler. Equation 3.2(1) shows how this hydrostatic head is calculated.

$$H = (h)\ (\rho)\ (G/G_c) \qquad \textbf{3.2(1)}$$

where

H = hydrostatic head
h = vertical depth
ρ = average fluid density over depth
G = local gravity
G_c = units conversion factor, not required with SI units

The total mass of liquid in the tank is obtained by Equation 3.2(2).

$$M = (H)\ (A) \qquad \textbf{3.2(2)}$$

where

H = hydrostatic head
A = cross-sectional area of vessel

The mass calculations must be corrected for any variations in cross-sectional area over the range of interest. The oil industry uses the term *strapping* to refer to the process of calibrating a tank. Internal devices, construction tolerances, and even the deformation of a large storage tank with level variations affect the accuracy of any level gauge. Actual test data is required for reliable measurement accuracy.

The prudent user will not calibrate the level measurement to 100% of the tank height but will allow for errors and for changes in density. If a tank is calibrated for 100% of full tank level for a heavy liquid of, say, specific gravity of 1.2, it will overflow if used on water with a specific gravity of 1.0. If the liquid cannot freely overflow, the hydrostatic pressure will build up inside the vessel and create a lifting force on the top while pushing the walls out. As a result, the side-to-bottom joints might fail.

The Hydrostatic Tank Gauge (HTG)

Density can be measured by detecting the pressure difference from two dip tubes immersed in the liquid, with their bottom ends vertically separated by a fixed distance "*h*" in Figure 3.2g. Where needed, a third pressure, the vapor-space pressure above the liquid, is also measured and can be used to determine the density of the liquid. If both level and density are known, one can determine the mass in the tank. All three values (volume, mass, and density) can be reported for different uses. Improved accuracy in pressure transmitters has made it possible to install hydrostatic tank gauges (HTG), which are illustrated in Figure 3.6e.

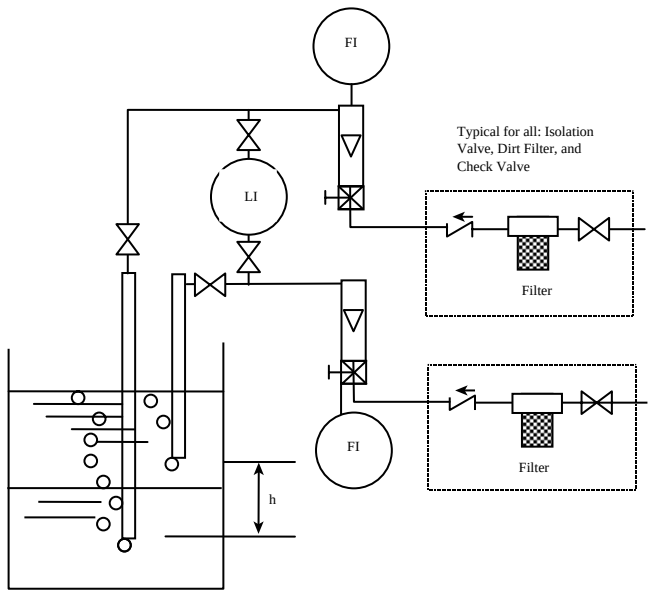

FIG. 3.2g
The measurement of density by bubblers.

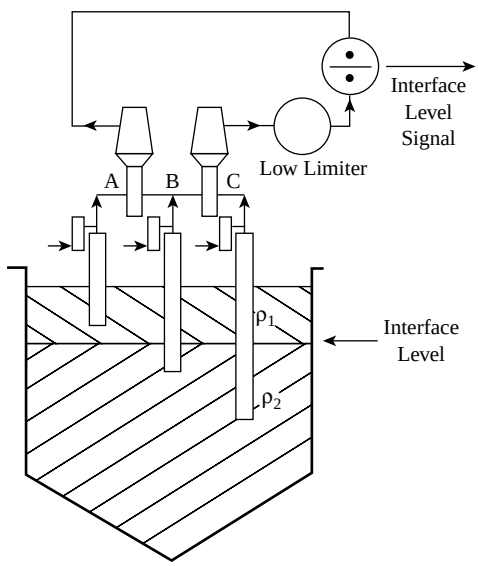

FIG. 3.2h
Density compensated interface detection with bubbler tubes.

If there are two immiscible (nonmixing) liquids, then the height of the interface above the more dense liquid may be inferred by the HTG. Note that the difference in pressures in the two tubes may be small and require a very accurate detector and a large suppression of zero. Note also that the interface measurement is affected by changes in density, which can be caused by changes in composition or density.

Density

As shown in Figure 3.6e, the differential pressure can also be a measure of density. Figure 3.2h shows how bubblers can also be used to correct the level for variations in density

© 2003 by Béla Lipták

or to measure interface or other hydrostatic-head-related variables.

Calibration

The bubbler differential pressure can be calibrated in inches or millimeters of level or in regular pressure units, but it is absolutely vital to have good records of the units used and of all the conversion factors. For high precision at very high operating pressures, it might also be necessary to correct for the weight of the highly compressed gas column in the bubbler. Another factor to consider is the thermal expansion and contraction of the vessel and the dip tube caused by atmospheric or process temperature variations. In addition, pressure changes and gravity forces caused by level variations should be considered.

FLOW RATE AND PLUGGING CONSIDERATIONS

Minimum Purge Flow Rate

For accurate level signals and to keep the inside of the dip tube dry, it is necessary to provide a sufficient mass flow rate of purge gas to keep the dip tube full, even during a high rate of level or vessel pressure increase. These required rates can be calculated by first calculating the total volume of the tank corresponding to each inch of level change and, after that, determining the corresponding mass of air in this volume. The difference in this mass divided by the time for the pressure or level to change is the average mass flow rate required. A typical conservative value commonly used for atmospheric tank level detection is 0.5 SCFH, or 50% of full range on a 0 to 1 SCFH range rotameter.

Maximum Purge Flow Rate

The tubing must be large enough to keep the pressure drop between the air or gas supply regulator and the end of the dip tube at a negligible value. Most users specify a minimum of 3/8-in. (10-mm) OD tubing and, preferably, 1/2-in. (12-mm) OD tubing or piping should be used. To test the maximum flow limit of a bubbler installation, make a small change in purge flow rate and observe the effect. The level readout should not change as a result.

Most problems with excessive pressure drops are caused by damaged or deformed tubing or to partially closed valves. Sometimes, when excessive leakage from the system is noticed, maintenance technicians will respond by increasing the airflow sufficiently to keep the level detector in operation. The resulting problem is that the level signal then will vary not only with level but also with the purge flow rate. On high-vacuum processes, the low density, and therefore high specific volume of the purge gas, will cause high gas velocities and will also increase the probability of leakage.

Dip Tube Diameter Selection

Dip tube sizing is determined both by the pressure drop through it, but mostly by the required mechanical strength of the system. Up to a length of 8 ft in un-agitated tanks (or 5 ft in agitated ones), the size of the dip tube should typically be 1 in. diameter, Schedule 40 pipe. Longer dip tubes must be supported (Figure 3.2i). In case of even longer dip tubes in agitated tanks, in addition to the guide support, a 2-in. (51-mm) pipe sheath is added as shown in Figure 3.2j.

Upsets and Plugging

The most common complaint about dip tubes is plugging, whereby the purge flow is lost or is inadequate. Under these conditions, the process liquids may rise up inside the dip tube and coat the walls. Over time, the coating will accumulate and restrict the flow of the purge gas. The beginning of plugging can be detected by slightly changing the purge flow rate and observing whether a change in level follows.

The probability of plugging in saturated salt solution services increases as the area of the tip of the dip tube is reduced. To unplug the dip pipe, we can apply “rodding out”

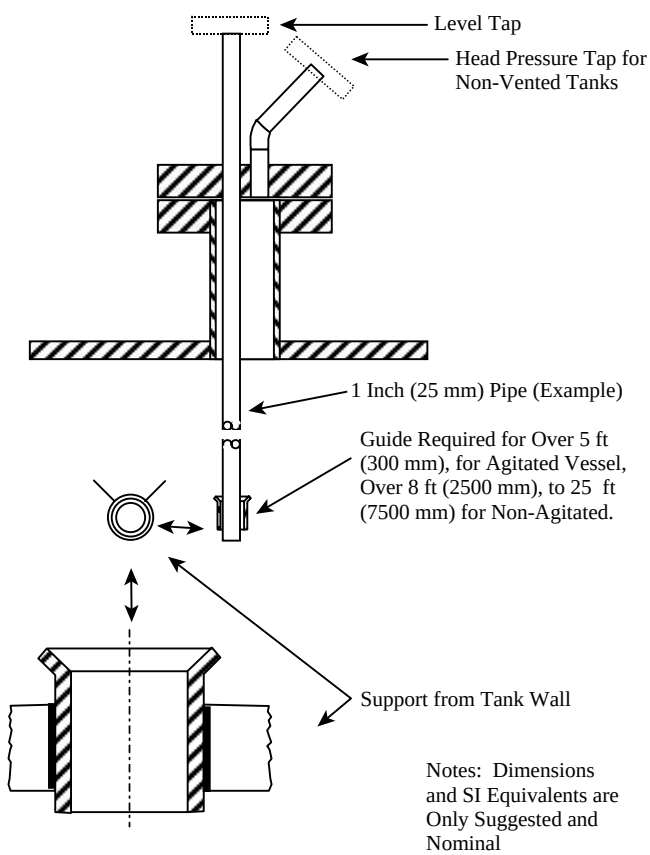

FIG. 3.2i
Supporting long dip tubes.

© 2003 by Béla Lipták

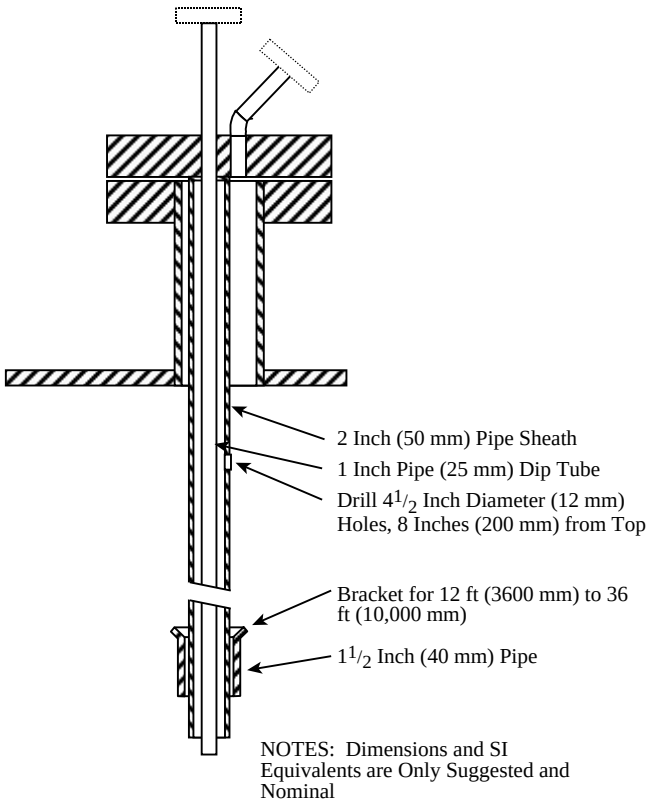

FIG. 3.2j
Sheath and bracket supports for dip tubes.

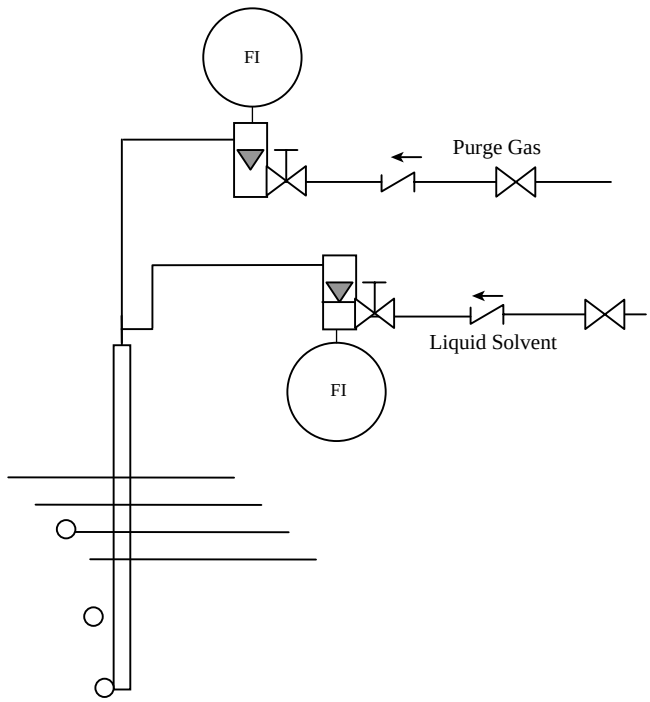

FIG. 3.2k
Alternate liquid purge can clean bubbler dip tubes.

using a twist drill that has been welded to a rod so that the end can be drilled clear. Special bubbler system designs can be used when the process liquid is a saturated salt solution and the salts are deposited inside the dip tube as the purge gas dries the solution. In saturated salt solution service, one can use water or a solvent to dissolve the deposits (Figure 3.2k). In viscous fluid services, solvents are used at flow rates of about 1 GPH to keep the dip tube clean. The solvent purge flow rate should be enough to maintain high humidity within the dip tube and to wash out any salts or solids.

When measuring the level of caustic, a common practice is to add a secondary purge of low-pressure steam, which is introduced very close to the point at which the dip tube enters the tank. The steam flow is restricted by an orifice union, typically bored for 0.125 in. (3 mm).

The theoretical design conditions in a plant can drastically differ from real-life and upset conditions. The prudent design engineer understands that, at one time or another, every instrument will be exposed to the pressure at which the system relief valve is set to open. On the other hand, the minimum pressure for a closed system is full vacuum. One should also consider the plant's safety in terms of the quality and availability of experienced personnel if, for example, the upset occurs at 3 A.M. on a weekend.

When a plant upset or system overhaul occurs, process equipment designed to operate at a high vacuum will be exposed to positive pressures as attempts are made to unplug piping or valves. As high-temperature processes are shut down, they might suddenly develop high vacuums, because their vapors cool and condense. Pumps, blowers, and other equipment are all cycled on and off because of stuck check valves or other system components. A power outage can also cause a loss of control and, on top of all that, human beings are not fully predictable, either. Some people, under an upset condition, will react with great confidence and do exactly the wrong thing.

INSTALLATION DETAILS

There are two fundamentally different approaches to the installation of bubblers, as illustrated in Figures 3.2l and 3.2m. Figure 3.2l illustrates a transmitter mounted on the top of the tank and therefore has a shorter purged tubing run. This makes the system less prone to plugging but also results in a less convenient access for maintenance. In Figure 3.2m, where the transmitter is mounted at ground level, the purged tubing runs are longer and more prone to plug, but access is more convenient.

The ground-mounted installation is usually provided with drip legs that, during upsets, can capture any liquid that might leave the tank. The drip legs can thereby protect the transmitter. In either case, the most important consideration is to maintain the adequate and reliable flow of purge gas. As was shown in Figure 3.2a, it is also advisable to prevent the blocking of the flow of purge gas when the dip pipe rests on the bottom of the tank. A simple solution is to cut the end at about a 45° angle to prevent blocking. On the other hand, this author has

© 2003 by Béla Lipták

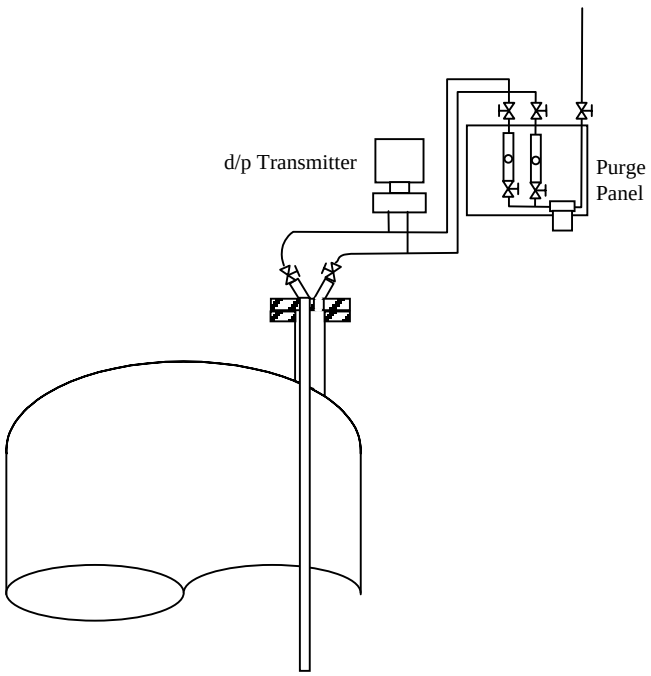

FIG. 3.2l
D/P transmitter mounted on the top of a tank.

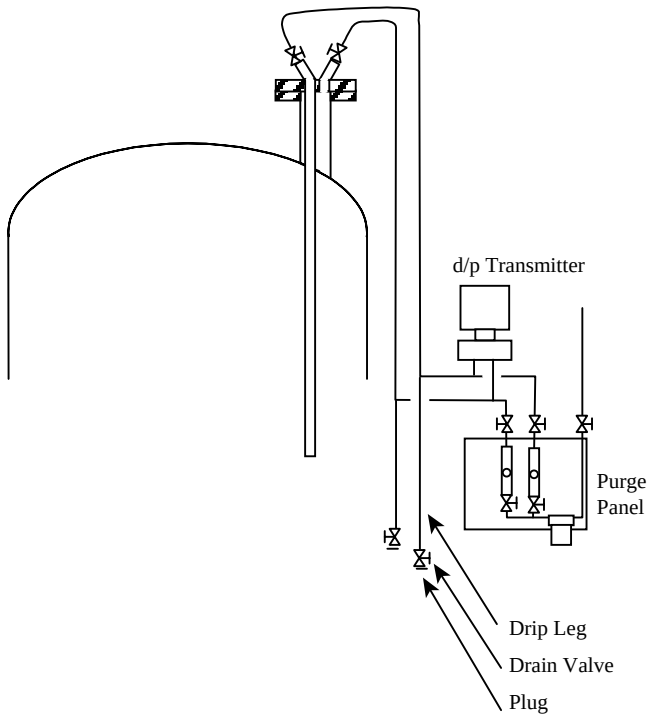

FIG. 3.2m
Ground-level mounted d/p transmitter installation.

not found that V-notches cut in the end of the tube will reduce the size of the bubbles or damp the small bump in pressure as each bubble escapes. This writer also believes that maintaining the purge flow rate at a constant value is not essential.

Pressure and/or Flow Regulators

Figure 3.2a shows a pressure regulator, but it is not necessarily true that a purge gas pressure regulator is necessary to stabilize the purge flow rate; some designs use only a flow rate regulator. For a properly designed system, the flow velocity in the tubing must be low enough that any reasonable change in flow will have practically no effect on the gas pressure at the tip of the dip pipe. If pressure changes with purge rate, then something is wrong with the installation, and the problem should be addressed.

The most likely cause is that the flow rate is restricted at the wrong place. It is apparent to this writer that reducing the purge gas pressure is not the preferred practice, because it increases the probability of the loss of purge flow. This can lead to plugging or to measurement errors.

The standard air supply regulator has a built-in overpressure vent to protect pneumatic instruments. However, in bubbler service, this vent allows the process to back into the dip tube if the process pressure exceeds the setpoint of the overpressure vent. Therefore, the "nonbleed" regulators should be used on bubbler installations, which will not vent and will therefore make the full air supply pressure available as the flow is reduced to nearly zero. Nonbleed regulators are available but are not always used, because of concern that they might be accidentally installed on other pneumatic instruments as instrument air supply regulators.

The purge gas supply pressure is commonly far higher than the pressure in the dip tube, and the pressure drop across the flow-restricting needle valve is large. This results in a nearly constant purge flow rate, even if the pressure of the air supply or in the dip tube changes. Yet, the full supply pressure remains available if needed. This is similar to the constant-current concept used in some electronic circuits.

The only remaining reason for having a pressure regulator is to protect the pressure indicator, but, if there is no pressure regulator, no gauge is needed. A modern d/p-cell type of pressure transmitter will withstand the full instrument air supply pressure without damage. For the above reasons, it is this writer's view that the traditional installations shown in Figures 3.2a and 3.2b can be simplified by eliminating the pressure regulators and by making sure that all instruments and tubing components will withstand the maximum possible supply pressure.

DIAPHRAGM-TYPE DIP TUBE

For some applications where the normal dip tube is not acceptable, the "dry" dip tube or plug-proof dip tube is used, as described in connection with Figure 3.5d in Section 3.5. All that has been related here about purge supplies and sensors also applies to these installations except that a barrier is provided to prevent process liquids from backing up into the dip tube.

The diaphragm is not perfectly flexible and does offer same resistance, so a small offset will exist in the resulting signal pressure. There is a choice of diaphragm sizes, and

© 2003 by Béla Lipták

the larger diaphragms will have smaller offsets, whereas the smaller diaphragms are less likely to fail.

SAMPLE CALCULATIONS

Level Detector Calibration Example

If one is to calibrate the range of the level detector (r) in inches of water column (*"WC*) for a 25-ft-high tank containing a liquid of 0.85 specific gravity (SG), which corresponds to 62.4 lb/ft^3 or 999.8 kg/m^3, and it was decided that the tank will be considered full at 80% of tank level.

$$\text{Range } (r) = 25 \times 12 \times 0.8 \times 0.85 = 204 \text{ "WC } (5182 \text{ mm } WC) \quad \textbf{3.2(3)}$$

If the same level detector range is to read in units of PSI,

$$\text{Range } (r) = (25 \times 0.8 \times 0.85 \times 62.4)/144 = 7.36 \text{ PSI} \quad \textbf{3.2(4)}$$

If a tank contains oil (SG = 0.8) and water (SG = 1.0) and we want to detect the movement of the interface in inches of WC over a range of 10 in.,

$$\text{Range } (r) = (1.0 - 0.8)\,10 = 2.0 \text{ "WC } (50.8 \text{ mm } WC) \quad \textbf{3.2(5)}$$

Density Detector Calibration Example

If one is to detect the average density of a 10" layer of liquid in a tank by measuring the differential pressure across that layer, which can contain any mixture of oil (SG = 0.8, density = 49.92 lbm/ft^3) and water (SG = 1.0, density = 62.4 lbm/ft^3), the d/p cell range is:

$$\text{Range } (r) = 10\,(1.0 - 0.8) = 2 \text{ "WC} = 50.8 \text{ mm } WC = 49.92 - 62.4 \text{ lbm/ft}^3 \quad \textbf{3.2(6)}$$

CONCLUSION

The bubbler remains a valuable tool in level measurement due to its low cost, simplicity, and flexibility. It is also valuable as an inexpensive and easily installed backup overflow protector. For some specialized measurements, such as interface detection between oil and water, the capacitance gauge is more popular because of its higher sensitivity and better performance.

When designing a difficult level-measurement system, a prudent design engineer might do well to specify spare nozzles for installing a bubbler as a backup on a vessel if more modern level sensors could fail to work properly. Successful bubbler applications include polymers, tars, salts, and other difficult fluids. Failures resulting from dirt and plugging can be simpler to live with using a bubbler than with floats or other devices that have moving parts. The advantages of the HTG system (Figure 3.6e) can also be realized with the dip-tube type of bubbler detectors.

There has been some environmental concern that, with a bubbler, the purge gas that enters the tank also has to be removed, but these purges are a very small portion of the total gas and vapor flow that must be removed anyway. For example, in the case of large storage tanks, the gas displaced during each cycle of emptying and filling is usually more than the volume of the gas used for purging at 1 SCFH for a week.

The main advantage of air bubbler systems is their simplicity and the ease with which the readout device can be relocated to just about any convenient location. For remote tank farms where compressed air is not available, one of the simplest methods of level detection is to use a small hand pump and a gauge. Bubblers are widely used in the wastewater and food industries and in some bulk storage applications, but they have lost some of their earlier popularity in the processing industries, where the trend seems to be favoring nonflowing, solid-state electronic devices.

Bibliography

API Recommended Practice 550, *Manual on Installation of Refinery Instruments and Control Systems*, Part I, Process Instrumentation and Control, Section 2, Level, American Petroleum Institute, Washington, DC.

Bahner, M., A practical overview of continuous level measurement technologies, *Flow Control*, June-July 1997.

Berto, F. J., *The Accuracy of Oil Measurement Using Tank Gaging*, ISA, Research Triangle Park, NC, 88–1561.

Berto, F. J., Technology review of tank measurement errors reveals techniques for greater accuracy, *Oil & Gas J.*, March 3, 1997.

Control level under fouling conditions, *Hydrocarbon Processing*, November 2000.

Cornane, T., Continuous level control, *Measurement and Control*, April 1997.

Felton, B., Level measurement: ancient chore, modern tools, *InTech*, August 7, 2001.

How can we measure level of petroleum sludge? *Control*, August 1999.

Hughes, T. A., *Measurement and Control Basics*, 3rd ed., ISA, Research Triangle Park, NC, 2002.

Johnson, D., Level sensing in hostile environments, *Control Engineering*, August 2001.

Level measurement and control, *Meas. Control*, April 1991.

Luyts, J. and Marcelo, L. D., Fieldbus HTG System Measuring On-Line Concentration, ISA, Research Triangle Park, NC, 1998.

Nyce, D. S., Tank gauging advances, *Fuel Technology Management*, January 1997.

Piccone, R. P., Combining technologies to compute tank inventory, *Sensors*, October 1988.

Van de Kamp, W., *The Theory and Practice of Level Measurement*, 17th ed., Endress+Hauser, Greenwood, IN, 2001.

Waterbury, R. C., Liquid level measurement 101, *Control*, November 1998.

© 2003 by Béla Lipták

3.3 Capacitance and Radio Frequency (RF) Admittance

D. S. KAYSER (1982) **B. G. LIPTÁK** (1969, 1995) **J. B. ROEDE** (2003)

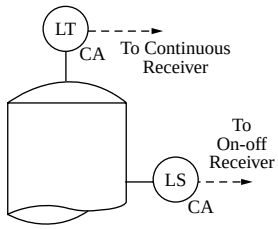

Flow Sheet Symbol

Service	Point level control (using contact and proximity sensors) and continuous level transmission for liquids, granular solids, and liquid–liquid interface
Design Pressure	Routinely to 1000 PSI (7 MPa), others to 5000 PSI (35 MPa), specialized applications to 20,000 PSI (140 MPa)
Design Temperature	500°F (260°C) maximum with insulated sensors; 1000°F (540°C) bare metal, sealed to 200 PSI (30 kPa); 2000°F (1100°C) bare metal at atmospheric pressure
Excitation	Less than 10 V @ 10 kHz to 1 MHz
Wetted Materials	Type 316 SS and TFE for common models, with options for CPVC, FEP, PE, PEEK, PFA, PP, PVDF, urethane, Hastelloy®, Inconel®, Monel®, nickel, titanium
Span	2 to 3 in. (50 to 75 mm) of insulating liquid to 1000 ft. (300 m) for immersion probes and 0.1 in. (2.5 mm) to 10 in. (250 mm) with proximity sensors
Inaccuracy	Horizontal, less than the diameter of the probe rod Vertical, less than 0.1 in. (2.5 mm) for bare single points in conducting material, roughly 1% of maximum active length for *all* insulated probes in conducting or interface service, 3% in insulating liquids (or 0.5% with dielectric compensation), roughly 5% for granular insulating solids with constant density and composition, and 2 to 5% for conducting granular solids
Dead Band	Unmeasurable with analog instruments and horizontal probes; dependent on A/D resolution with digital continuous instruments; small and application dependent on vertical single points, but optional dead band adjustment is available
Temperature Coefficient	Extremely variable depending on (a) probe insulation and degree of probe-to-sheath bonding in conducting materials, and (b) composition and density variation in insulating liquids
Damping and Time Delay	Adjustable time delay of 0 to 30 sec is included on most single-point controls; adjustable time constants up to 30 sec are available on most analog transmitters, and digital instruments offer zero to several minutes
Cost	$200 to $800 for single-point controls; $500 to 1500 for two-wire level transmitters; all with type 316 SS and TFE wetted parts; increased cost with exotic metals, hermetic seals, flange mounting, longer insertion length, digital output, dielectric compensation, extended press and temp, and longer inactives
Vendors (partial list)	ABB Process Automation Instrumentation Div. (www.abb.com/us) AMETEK Drexelbrook (www.drexelbrook.com) Arjay Engineering Ltd. (www.arjayeng.com) Babbitt International Inc. (www.babbittlevel.com) Bindicator (www.bindicator.com)

© 2003 by Béla Lipták

BinMaster (www.binmaster.com)
Delavan Inc.
Delta Controls Corp. (www.deltacnt.com)
Endress+Hauser Inc. (www.us.endress.com)
FMC Invalco (www.fmcinvalco.com)
GLI International (www.gliint.com)
HiTech Technologies Inc. (www.hitechtech.com)
K-Tek Corp. (www.ktekcorp.com)
Lumenite Control Technology Inc. (www.lumenite.com)
Magnetrol International (www.magnetrol.com)
Monitor Technologies LLC (www.monitortech.com)
Monitrol Manufacturing Co. (www.monitrolmfg.com)
Omega Engineering Inc. (www.omega.com)
Penberthy (www.penberthy-online.com)
Princo Instruments Inc. (www.princoinstruments.com)
Robertshaw Industrial Products Div., an Invensis Co. (www.robertshawindustrial.com)
Scientific Technology Inc. (www.automationsensors.com)
Systematic Controls (www.systematiccontrols.com)
Vega Messtechnik AG (www.vega-g.de)

INTRODUCTION

Characteristic of probe-type sensors, the RF probes operate by applying a constant voltage to a metallic rod and monitoring the current that flows. This current is proportional to the admittance or capacitance (if conductivity is absent) from the metallic rod to a second electrode. Because the tank wall is the most convenient second electrode, most instruments monitor current to ground (which is usually connected through the probe mounting). The obvious difference between conductance and RF probes is the frequency of that constant voltage. Whereas conductance types use DC or low-frequency AC, the RF items usually operate in the range of 0.1 to 1.0 MHz (although special applications can operate at 15 kHz or even lower frequencies). RF probes are connected to their associated electronic units with coaxial cable except when the electronics are integrally mounted on the head of the probe.

The classic shortcoming of capacitance probes is false HI level indications caused by conductive coatings that connect the above-level sensing element to ground (or the actual process level). Since 1970, solutions to this problem have existed in all but the heaviest, high-conductance process situations. In the case of single-point level switches, the answer is electrogeometric. In the continuous level transmitters, the approach is purely electrical.

Because of the solid, no-moving-parts construction, there is very little to deteriorate or fail once an RF probe is installed. Compatibility with process liquids is the most obvious obstacle to a satisfactory life span. This is no problem with common, well-documented reagents at temperatures below 150°F (65°C). At higher temperatures, the increased chemical activity and accelerated permeation experienced by polymers can produce unexpected results. Abrasion of metals and insulators is another cause of shortened life that must be anticipated. Baffles to protect the sensor from high-velocity solids, combined with judicious location, can minimize this danger.

Probe failure in heavily agitated tanks can be avoided by attention to structural considerations. In the case of rigid probes, the most likely cause of breakage is fatigue failure caused by eddies rapidly pushing the probe in one direction and then in the opposite. A support, with an insulated bushing, near the tip of the probe greatly reduces the possibility of such a failure. Flexible cable types can wrap around an agitator and fail in minutes if not adequately anchored to the tank structure. If they are anchored without removing slack, they can whip back and forth, causing insulation failure and eventual breakage. Intermediate supports are possible in highly agitated service using insulated bushings. Beware of thick, conductive coatings that can cause substantial errors at each support point. These "shortcuts" to ground can defeat the electrical coating rejection in the worst cases. Correct structural design is the responsibility of the system designer, not the probe supplier. Most suppliers can give rules of thumb for their probes and provide structural details of the construction. It may require a consultant who is skilled in fluid dynamics and mechanics to arrive at a sure configuration in a highly agitated vessel.

Process instruments that depend on electrical characteristics of the process material are at a disadvantage, given that the electrical character is of little interest to most instrument users. Fortunately, exact values of conductivity (g) are never required, and *changes* in relative dielectric constant (K) are more important than the precise value. In most cases, classification as *conducting* or *insulating* goes a long way toward successful application. Within the conducting category, it is sufficient to know that, except for completely deionized water, aqueous solutions *will* be conductive. On the insulating side, it is generally sufficient to understand that most liquids will have a K of 2 or greater. The main exceptions are liquids that would be gases at room temperature (with the notable

© 2003 by Béla Lipták

except for ammonia, for which $K > 15$) and atmospheric pressure. Not only do these fluids tend to have K less than 2, they tend to have much higher temperature coefficients of K than insulators that are normally liquids.

This section is divided into single-point and continuous transmitter categories to reduce confusion. The RF sensors are somewhat unique in that single-point switches have a substantial *performance* advantage over the continuous type in terms of accuracy, temperature capability, coating rejection, self-checking, and reliability. It seems that, in many cases, the transmitters are thought to be the superior approach to control, and they obviously are necessary to obtain a proportional band. In many cases, strategically placed single-point units are a superior route to precise and reliable process control. Considering that *any* instrument can fail on occasion, single-point probes provide highly reliable backup, with self-test capability, and are superior to any transmitter.

TYPES OF PROBES

The most basic probe configuration is a metal rod. The rod is insulated from a metal mounting element that connects it to the process vessel via threads into a half coupling or a flange that mates with one on a tank nozzle. The insulated junction of rod and mounting includes whatever seal is required between the process and outside world. The next step in complexity includes an insulating coating on the rod, (Figure 3.3a) that isolates it chemically as well as electrically from the process. Insulated probes should have the insulation securely bonded to the metal rod over the entire range of service temperature. This bonding ensures that process pressure changes

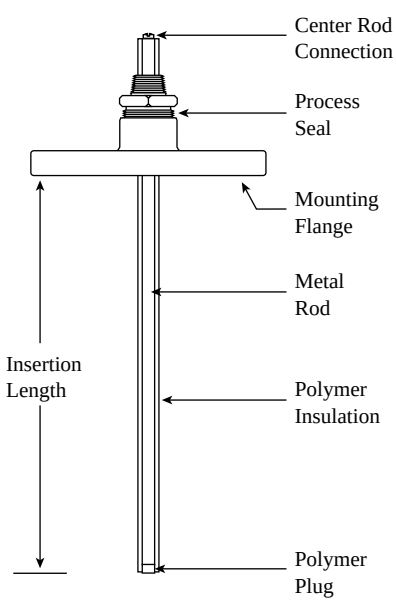

FIG. 3.3a
Insulated two-terminal probe.

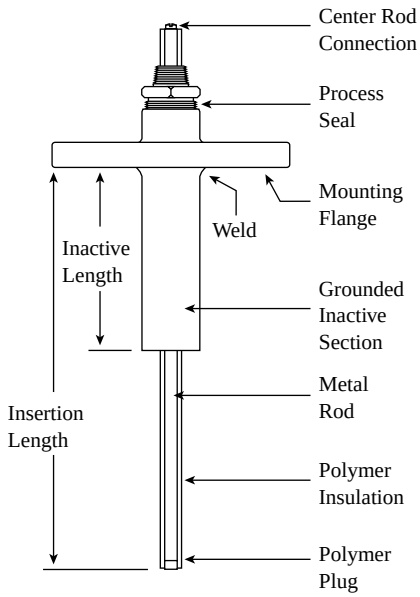

FIG. 3.3b
An insulated, two-terminal probe with grounded inactive section.

will not compress air space and change the calibration. Bonding is also important to minimize permeation, which is present to some slight degree with *all* polymers. The addition of a tight-fitting metal tube over part of the insulation, welded to the mounting element (Figure 3.3b), will make the covered section of the probe "inactive," because it will always see the same impedance to ground, regardless of the process material on the outside. A more sophisticated way to "inactivate" a section of the probe is to use the widely known *electronic guard* principal. A tight-fitting metal tube, insulated both from the rod and the mounting element (Figure 3.3c), with a voltage identical to that on the rod, will not only deactivate that section of the probe but will also negate the rod to mounting capacitance. These are sometimes referred to as *three-terminal* probes, because there is now a rod connection, a ground connection, and a guard (sometimes called a *shield*) connection, as opposed to the *two-terminal* rod and ground style connections. An additional variation is the probe that carries its own intrinsic ground reference. This can be a larger concentric tube welded to the mounting element (Figure 3.3d), with bleed holes at the top to avoid compressing gas as the liquid rises in a closed chamber. Perforated tubes, insulated and bare ground rods, as well as structural cages (Figure 3.3e) are also available for various conditions of agitation, temperature, and chemical compatibility. The sensors, which use a ground wire wrapped in a helix directly on the probe insulation, are unstable, unreliable, and facilitate coating.

A three-terminal probe, with a plate welded on for greater capacitance (Figure 3.3f), makes an excellent proximity sensor. The field from the guard can even be used to direct or focus the field from the sensing element and determine the region of sensitivity. In proximity measurements, the

© 2003 by Béla Lipták

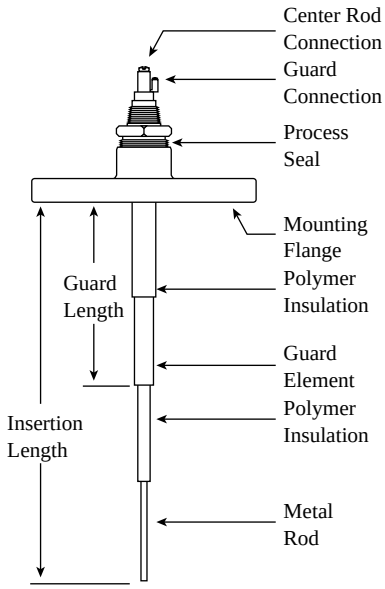

FIG. 3.3c
A three-terminal probe that employs the "electrical guard."

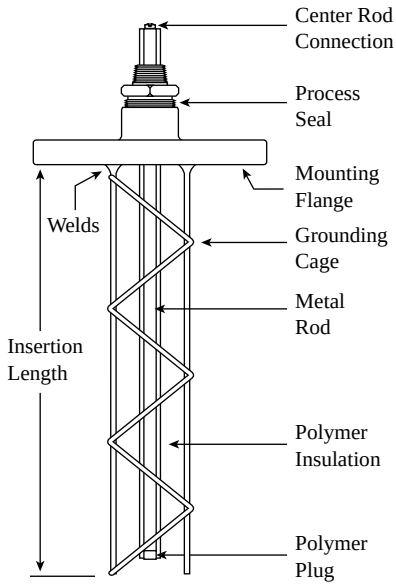

FIG. 3.3e
A two-terminal probe with a cage, for grounding in viscous liquids.

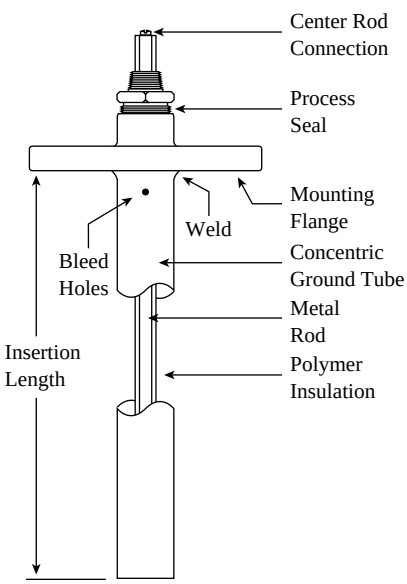

FIG. 3.3d
A two-terminal probe with intrinsic, concentric ground reference.

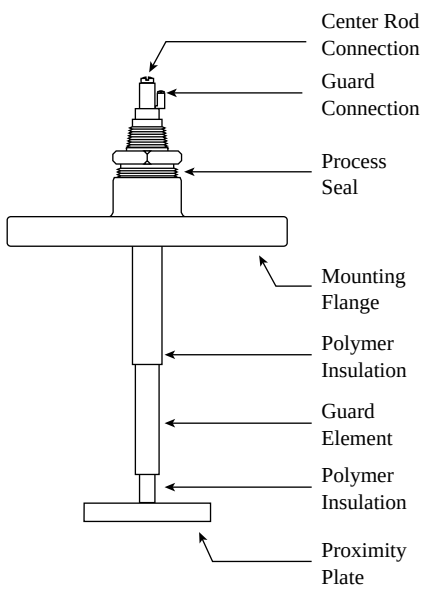

FIG. 3.3f
A three-terminal probe with plate for proximity sensing.

capacitance change (proportional to sensor area) is typically very small but stable, because it is effectively looking at the air capacitance between sensor and process material. Even minute capacitance changes due to temperature or stress in the mounting area could be catastrophic with an unguarded probe. The distance between the probe and process material should be as short as feasible. The capacitance produced is inversely proportional to this distance. This means that beyond 10 in. (250 mm), the capacitance change becomes extremely hard to detect. The error produced by splashing and condensation buildup on the plate is fairly benign—never more than the actual coating thickness, and usually less. Spans of 2 or 3 picofarads (pF) have been used successfully. Such small ranges are the result of level change in shallow pans, with limited space for proximity plates.

The electronic guard principle can be employed in an infinite variety of geometries. A typical example is the flat plate probe (Figure 3.3g), which mounts flush with the tank wall. This is very effective in reducing abrasion, eliminating bending of low-level sensors under heavy mechanical loads, and eliminating sparks from static discharge. The monitored current flows from the center plate, and the guard surrounds

© 2003 by Béla Lipták

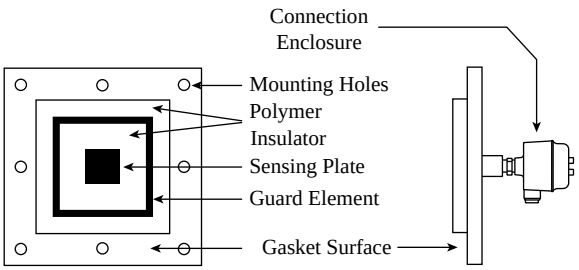

FIG. 3.3g
A three-terminal flush mounting probe.

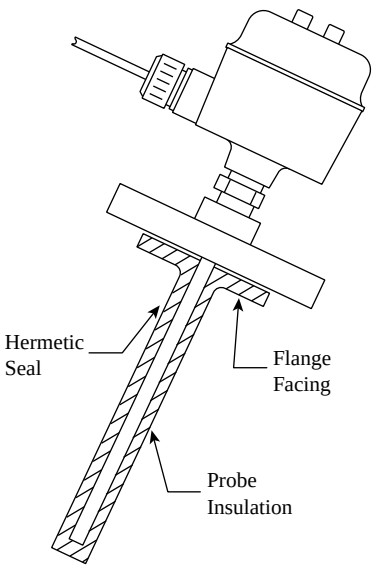

FIG. 3.3h
Probe with plastic-welded process seal. (Courtesy AMETEK-Drexelbrook.)

it, interrupting a path to ground through any coating on the face of the probe.

For the ultimate in seal reliability and hermeticity, plastic welding offers unique benefits. By plastic welding a polymer flange facing to the probe insulation (Figure 3.3h), a high-pressure seal is formed (and has been used to 5000 PSI [35 MPa] with the correct flange rating), with the normal process seal acting as a backup. This type of weld is not possible using TFE, which does not melt, but most other polymers are candidates. It also precludes the use of thin probe insulation. The flange facing should be used as the only gasket, because it must be pinched between the flange faces. Only raised face flanges provide the correct sealing, so RTJ and flat-faced flanges are not applicable.

MOUNTING AND TANK ENTRY

One of the most frustrating barriers to good RF probe application is inadequate or misplaced tank access on existing tanks. Often, adding a nozzle or even a half-coupling is

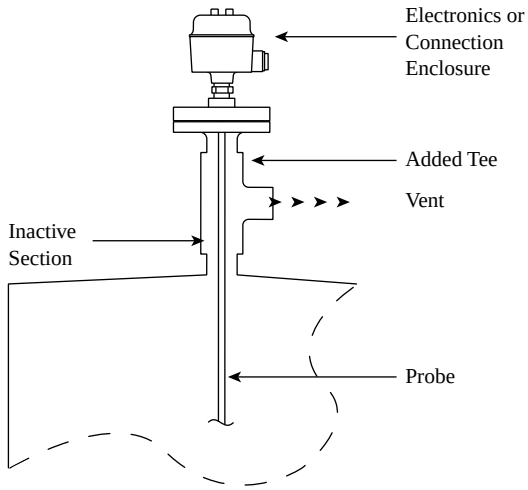

FIG. 3.3i
Vent pipe serving dual function for tank access.

impossible, because the tank is pressure coded, requires arduous inerting, or cannot be taken out of service. One very simple-minded and geometrically demanding approach is to use a bent probe inserted through a side entry so as to get its active area to the desired measurement location. A flange mounting is usually mandatory to avoid "screwing," which would cause the bent probe to rotate inside the tank like an airplane propeller. Its angular location, once the thread is tightened, would also be a question. If a suitable nozzle is available, it must be short enough to get the bend in the probe "around the corner" before it binds. If the measuring leg of the probe is relatively long, it must not hit the opposite wall of the vessel before the bend allows it to pivot. Another drawback to the bent probe is the requirement that any insulation be flexible enough to tolerate the bending process without tearing or splitting. This limits the selection to soft, thick insulation and therefore relatively low capacitance (60 to 100 pF/ft).

Many strategies allow us to avoid the bent-probe trap by using a little bit of imagination. Every tank or bin should have a vent or pressure relief pipe. It is usually possible to tee that pipe so that the vent or relief goes off to the side and a probe has straight access into the process (Figure 3.3i). This does not affect the pressure code of the vessel, since it is external plumbing. Other ways to avoid the "pretzel probe" include the following:

- Angle mount a straight probe from the side.
- Install the probe from the bottom up.
- Use a grounded inactive section to get through various impediments.
- "Dog-leg" a pressure gauge to give the probe a straight shot.
- Cut a hole in the building's roof or ceiling in lieu of headroom.

© 2003 by Béla Lipták

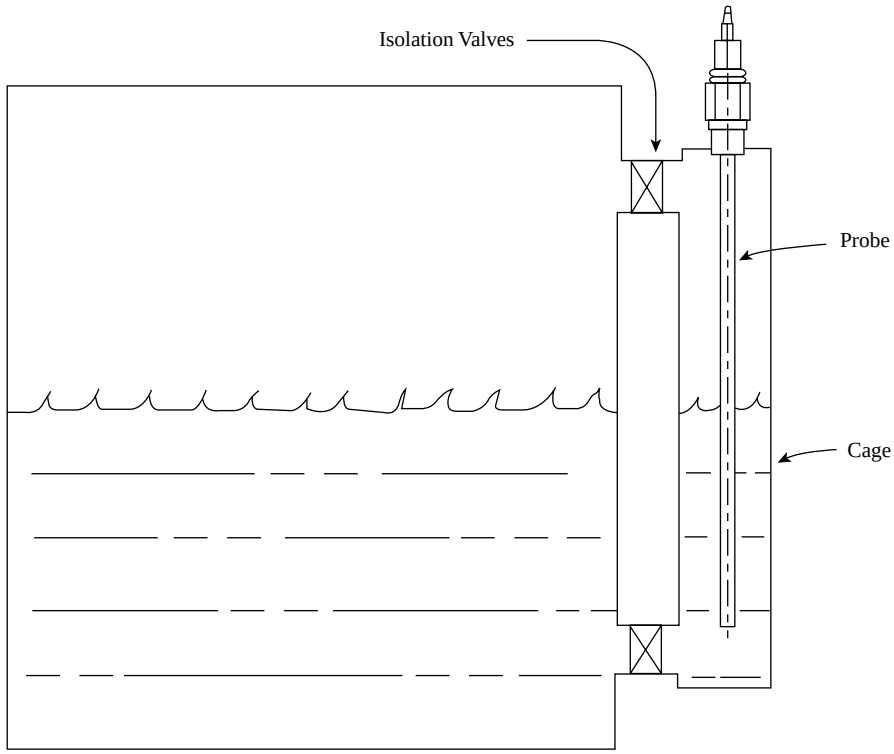

FIG. 3.3j
Side arm (cage) mounting, when there's no other way. (Courtesy of Robertshaw Controls Co.)

- Use "rear mount" piping to plumb through a dust collector or a side of the tank.
- Add a stand pipe (sidearm) parallel to the tank (Figure 3.3j).
- Tee into a fill pipe (this needs detailed application analysis).

Ingenuity will always trump bent probes for performance, cost, and efficiency.

ELECTRONIC UNITS

Electronic units for single-point instruments are available in line-powered configurations for 24 VDC; 120 V, 50 to 60 Hz AC; and 230 V, 50 to 60 Hz AC. They also can be obtained with "universal power" capability that allows them to use any of these plus 130 VDC. The output from these units is generally a set of double-pole, double-throw relay contacts. Some of the DC-powered instruments use an NPN or PNP output transistor to effect the switching. There are also two-wire, loop-powered versions that offer intrinsic safety and automatic self-checking. The signal from these instruments is a high or low current within the 4- to 20-mA range. Various types of automatic calibration are available for these instruments, but they all encounter certain conditions that prevent them from being calibrated properly under every possible condition. Regardless, the calibration of single-point instruments is hardly rocket science.

Level transmitters are primarily loop powered, although line-powered items are available from some suppliers. The traditional analog 4- to 20-mA instruments have been giving way to those with microprocessors on board. Most of the digital instruments are capable of communication using one of the HART, Honeywell, or fieldbus protocols. This allows interrogation and modification of the instrument by means of a digital communicator. One of the most popular features of these instruments is their ability to calibrate on any two points in the range. It is possible to enter the correct output (in milliamps or level units) at an existing low level and enter a high point days later. The instrument locks the input/output curve into those two points. The signal from the instrument is either analog 4- to 20-mA or digital. The digital mode allows more than one transmitter to use a single loop. The limited power available at the transmitter, combined with the multitude of calculations being executed, causes digital instruments to be considerably slower than the analog ones. Response times of 3 to 4 sec are possible, whereas analog instruments are capable of responses within 100 to 300 ms. For small tanks with high fill and drain rates, the digital instruments might not be an option.

A hybrid instrument is the "multipoint" control. It is essentially an analog instrument with internal, adjustable pick-offs and multiple relay outputs. It is useful for sump control where several pumps might be involved, but the absence of an analog output makes calibration lengthy. Each pick-off must be adjusted with the level at the desired point on the probe. This type of instrument is specified for HI, HI-HI,

© 2003 by Béla Lipták

and HI-HI-HI points at times. This doesn't make much sense, because one failure kills the whole operation.

SINGLE-POINT SWITCHES

The typical capacitance switch employs a vertical or horizontal probe, either polymer insulated or bare metal, projecting some distance into the process vessel with the center rod insulated from the mounting (Figure 3.3k). With any gas or vacuum ($K = 1.0$) on the probe, there will be a minute RF current flowing from the center rod to the metallic tank wall. When a liquid or granular solid covers the center rod, the current from there to ground will increase. This change in current is detected by the electronic unit, which switches the output. When the process material drops below the probe, the RF current decreases and, hopefully, returns to its previous low-level state. If the process material is thick and conductive, any coating remaining on the insulator between probe and mounting will maintain a higher RF current level and can cause the switch to continue signaling a high level.

The answer to false high-level indications is based on the classic *electronic guard* principle. By interposing a third metallic element (shield) with an identical RF voltage between the center rod and the mounting (Figure 3.3c), no current can flow from center rod to mounting. The shield element supplies whatever RF current the coating demands, but this current is not included in the measurement. "Length is strength" in capacitance probes. Longer active lengths translate to more substantial capacitance changes in insulating processes, and longer interelement insulators allow the instrument to reject higher conductance coatings. This means using horizontal probes for switch points close to the bottom and top of a tank rather than a vertical 2 or 3 in. (50 or 75 mm).

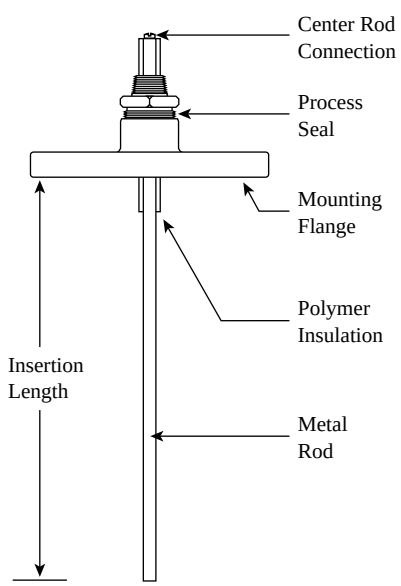

FIG. 3.3k
Bare metal, two-terminal probe.

Conducting Process Materials

Conducting materials (aqueous, metals, and most forms of carbon) carry the ground potential of the tank walls right to the probe. If bare metal, the probe will signal "high level" the instant it contacts the process. If it is insulated, the switching point will depend on the capacitance setting of the instrument. With a vertical, insulated probe, it is possible to adjust the level at which the switching takes place by varying the capacitance setting of the instrument. A horizontal probe of either type allows no level adjustment other than by relocating the mounting.

Coating is a serious consideration in all conducting materials, and the guard-type construction is usually required. With bare metallic probes mounted vertically, the plain capacitance probe will do as long as the process never reaches the mounting area and no crystallization or heavy condensation occurs. When using the guarded probes, the guard should be long enough to project well into the vessel, beyond nozzles and potential wall buildup.

Insulating Process Materials

The insulating materials (oils, solvents, resins) are subtler in their effect on the switching circuit. A horizontal probe produces a sharp capacitance change over the thickness of the center rod. Any portion that is in a nozzle should be inactive, either with the guard or a grounded inactive. With a vertical probe, capacitance increases gradually as more of the active length is covered. The switching point is adjustable even if the probe is bare metal. Good practice requires that the probe be at least 2 in. (50 mm) into the process material at the desired switching point. Attempting to get switching at the tip of the probe will lead to unreliable performance, because the slightest change in probe mounting or electronics can cause a constant high-level signal.

Dielectric constant (K) is relative to the absolute dielectric of a vacuum (K of gases barely differs). This means that the capacitance (and the proportional RF current) in air will be doubled in gasoline ($K = 2$). It will be multiplied by 20 in ethanol ($K = 20$). It will only be raised by 60% in liquid carbon dioxide ($K = 1.6$). Insulating coatings are a very minor problem. Just avoid bridging to a grounded part.

Plastic, Concrete, or Fiberglass Tanks and Lined Metal

The absence of metallic contact for a ground reference is seldom a problem using single-point RF probes in conducting process media. The probe will indicate high level whenever it touches the process. Unlike metallic tanks (or those with metal pipes, pumps, or grounding rods), it must be tuned to a value less than the capacitance-to-ground value of the tank. Most tanks have at least 10 pF to ground, which is a perfectly adequate level for a reliable measurement. Probes with a

© 2003 by Béla Lipták

guard element should not be mounted horizontally in ungrounded tanks with conductive contents. The guard can drive the entire process at the same voltage as the center rod, hence there is no current flow and no high-level signal.

In the case of an insulating medium in a fiberglass tank, even metal pipes offer little help to the miniscule capacitances. The only sure answer is a vertically mounted probe with its own metal ground rods or concentric tube. This is also a good precaution against RFI from walkie-talkies and other sources, which can cause false high-level signals.

Metal tanks that are rubber or plastic lined and steel-reinforced concrete vessels, on the other hand, represent excellent RF grounds. The capacitance from process to metal structure is very high as compared with the capacitance produced by an insulating medium. This makes it look like a short circuit to the RF current. It is excellent for conducting media, too, but it still requires the avoidance of horizontal probes with driven guards. Underground concrete or fiberglass tanks (except in desert conditions) present a similar ground configuration.

Concrete structures of cinder block with no vertical steel reinforcing bars are completely ungrounded and perform exactly the same as fiberglass tanks.

Interface

Electrical sensing is the premier method of detecting the interface between an insulating and a conducting process medium. The typical margin between the conductivity of organic and aqueous phases is greater than 1000:1. The measurement is completely independent of temperature and density variation. Probes may be mounted vertically or horizontally. Vertical probes should be inactive down to about 6 in. above the desired interface control point. This can be accomplished by use of the electronic guard, a grounded inactive, or a short probe mounted from the rear (*rear mount*) on the end of a suitable pipe. The instrument will indicate high level as soon as conductive material contacts the tip of the bare probe. In the case of heavy oil separators, it may be desirable to use a probe with sharp edges machined into the tip (Figure 3.3l). This will ensure good contact between water and steel in spite of oil coating. An interface detector with bare metal rod should be tuned to the maximum capacitance level of which it is capable.

Horizontal probes should be bare metal with relatively long insulators between probe and mounting (ground). Typical proportions, to maximize the margin between insulating and conducting phases, would be 12 in. (300 mm) overall length with a 10-in. (250-mm) long insulator. The use of sharp edges machined on the tip of the probe is also advantageous in this orientation. This is one situation in which the electrical guard is of no advantage (coatings are usually insulating rather than conducting) and can actually be a drawback if the guard drives the entire conducting phase at the same potential as the probe. This phenomenon is usually a product of insufficient grounding, but it has been observed in metal tanks.

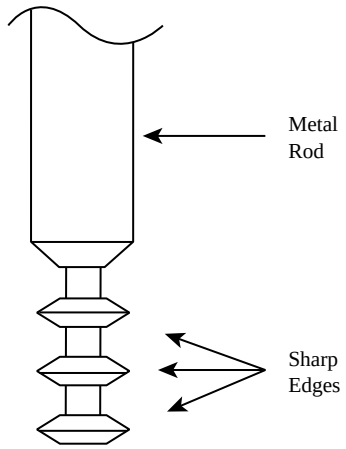

FIG. 3.3l
Oil shedding tip for interface with viscous organic phase.

GRANULAR SOLIDS

The best approach for establishing the high level in large silos is usually via a flexible cable probe with a long, thin weight at the bottom. It can be mounted close to the fill point (Figure 3.3m) and negate most of the angle of repose that side-mounted sensors encounter. The flexible aspect allows it to swing out of the way when struck by incoming solids. The actual switching should take place on the weight that will be least vulnerable to abrasion. In insulating materials, at least 6 in. of weight should be covered at the desired switching point. Conducting materials, of course, will switch as soon as they touch the tip of the probe. Incoming material will not cause false high-level indication as long as it is in free fall. This is because there is a very small air capacitor between each grain and all the others. All this series air capacitance means that any deviation from normal air capacitance is a negligible quantity. If the incoming material is compressed (especially conducting materials), it *is* possible that it could cause a trip, so the probe should be located accordingly. Rigid probes, located near the fill, are suitable for smaller bins and lighter duty.

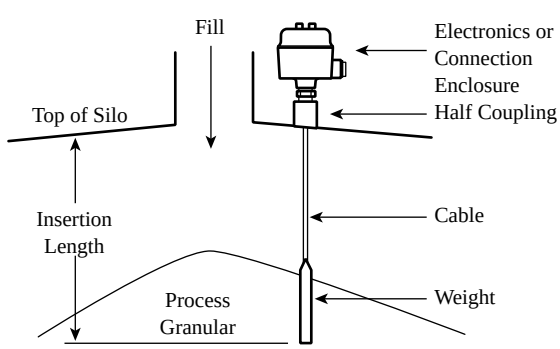

FIG. 3.3m
High-level probe for heavy granulars in large silos.

© 2003 by Béla Lipták

Horizontal probes mounted in the bin wall should be of the "guarded" variety to avoid false high-level alarms—especially for low-level service. The primary concern is bending or abrasion, which becomes more acute as the depth and density of the material increases. Short, fat probes have much better lifespan, and it is possible to use a flat-plate probe (Figure 3.3g) mounted flush with the wall for optimal life.

CONTINUOUS TRANSMITTERS

Probes are most commonly mounted vertically from the top of the tank. Angle mounting through the side of a tank is possible, as is mounting up from the bottom. When tank penetrations are at a premium, it is often possible to "tee" into a vent or drain line for probe mounting. There are even cases in which probes have been successfully "teed" into fill nozzles, but this requires considerable application analysis to predict the effect of incoming material. The insertion length of the probe should not extend beyond the desired measuring range by more than 5%. An active probe that is not producing signal can still produce errors.

Conducting Liquids

The main concept required to understand this class of applications is called *saturation*. Assume that an insulated probe is immersed in deionized water with minimal conductivity (Figure 3.3n). The addition of drops of hydrochloric acid to the vessel will gradually increase the conductivity. The output will also rise as more RF current flows from probe to ground. Eventually, the conductivity will be high enough that the resistance (R) from probe to tank wall is negligible compared to the capacitive impedance of the probe insulation (C_5). Further increases in conductivity will make no observable difference in the RF current and, therefore, the output (i.e., the RF current has reached its *saturation point*). This is the concept that makes the RF transmitter an instrument rather than a lab curiosity. A probe that is not saturated will have a calibration that is a function of two variables (conductivity and level), just as a d/p transmitter calibration is a function of density and level. It is possible to adjust the threshold of saturation by adjusting insulation thickness (hence capacitance) and excitation frequency. Raising the impedance of the insulation lowers the threshold, and vice versa. Saturation thresholds from 0.1 to 1000 μS/cm can be accomplished. A reasonable question might be, "Why not just use the 0.1 μS/cm threshold at all times?" The answer is "coating rejection."

The higher impedance that correlates with a low saturation threshold is less able to ignore high-conductivity coatings. In fact, a large mismatch may allow the coating to saturate the probe so that the output reflects the actual level plus coating length. In general, the path to best conducting coating rejection lies in the highest probe capacitance and excitation frequency that will allow saturation by the process material

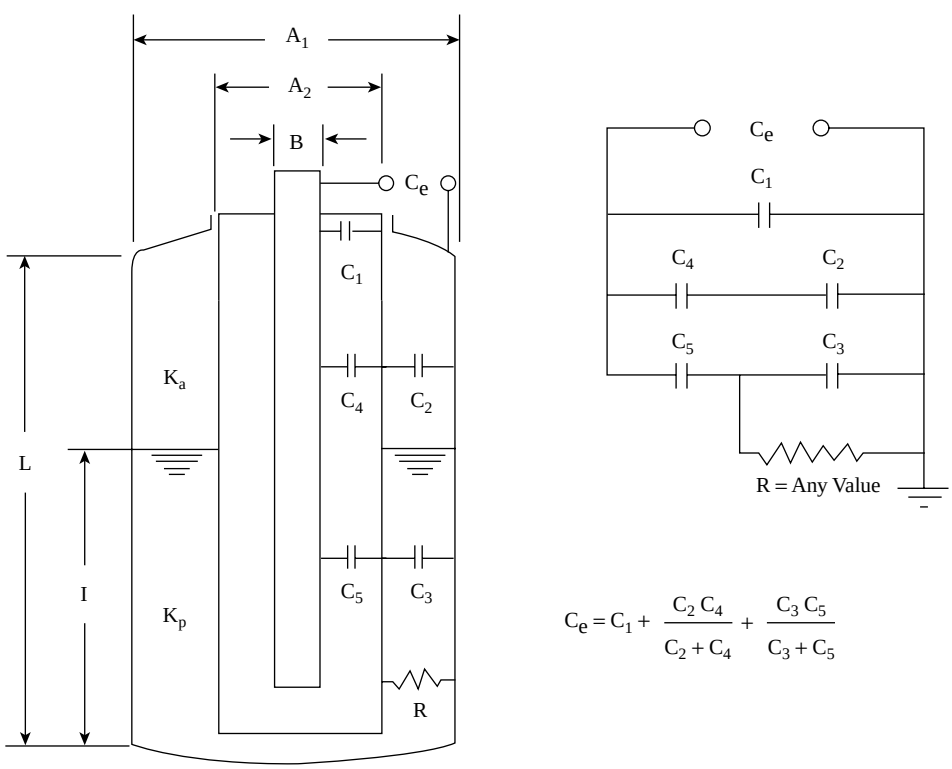

$$C_e = C_1 + \frac{C_2 C_4}{C_2 + C_4} + \frac{C_3 C_5}{C_3 + C_5}$$

FIG. 3.3n
Electrical representation of an insulated probe in conductive liquid. (Courtesy of The Foxboro Co.)

© 2003 by Béla Lipták

being measured. A special case for coating rejection is one in which the process liquid is conductive but can dry on the probe, forming an impervious, insulating coating. An example is latex paint. The liquid is quite conductive, but the dried paint adds to the insulation thickness of the probe, decreasing its capacitance and changing the calibration. The solution is to use a thick (low-capacitance) probe insulation so that thin additions will have negligible effect on calibration. By using the highest possible frequency, conductive coating rejection will also be maximized, and the resulting accuracy will be the best possible compromise.

Complex impedance (or its inverse, *admittance*) measurement allows the electronic unit to measure two variables: the capacitive component of RF current and the resistive component of RF current. The actual liquid level that saturates the probe produces a pure capacitive current. The conductive coating, because it is relatively thin, has a much higher resistance than the bulk liquid, so it will produce both capacitive and resistive phase current. By subtracting the resistive component from the capacitive, the effect of conductive coating on the output will be decreased. In fact, once the coating is longer than a nominal value, the two RF current phases equate, and the effect of coating is precisely zero. Maximum coating error occurs when the coating length is relatively short and its resistance therefore is low. The maximum error is a fixed, predictable number of inches for a given probe capacitance, excitation frequency, coating thickness, and conductivity. This means that percent inaccuracy due to coating will be greater on short ranges than on long ones. In other words, *length is strength*.

Insulating Liquids

Probes for measuring insulating liquids should generally include their own parallel ground reference to guarantee a uniform distance to ground through the process liquid. Linearity, sensitivity, and immunity to RFI are enhanced by a concentric ground tube (Figure 3.3d) or other construction. In some cases, it is efficacious to use a metallic tank wall, baffle, or ladder to furnish the required parallel ground reference. This is frequently the case in pharmaceutical or beverage applications where a concentric tube interferes with any clean-in-place function. It is also common in tall tanks that require flexible cable sensors and with slurries, which can accumulate solids and plug the ground reference.

Changes in dielectric constant will cause a change in calibration. If composition is constant, temperature will be the only concern for variation of *K*. Because *K* is proportional to the number of molecules between probe and ground, output (as with a d/p transmitter) will be proportional to density and, hence, the weight of process material. For cases in which constant composition and a reasonably narrow temperature range are not possible, a transmitter with dielectric compensation is available. By using such an instrument, it is possible to obtain a level signal that is independent of dielectric, and

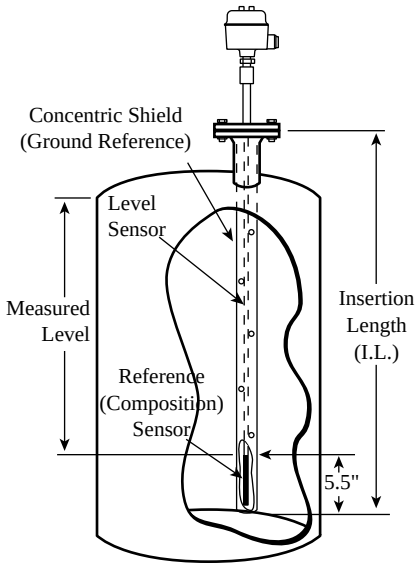

FIG. 3.3o
A probe with a second element for dielectric compensation. (Courtesy of AMETEK-Drexelbrook.)

even conductivity, when tanks are not dedicated. This technology demands two conditions:

1. A short inactive section at the bottom of the probe, approximately 6 in. (150 mm)
2. Homogeneity of the process liquid (no stratification)

The compensation is accomplished by making two independent measurements. The first measurement is made with a short sensor (composition probe) below the tip of the level probe (Figure 3.3o). This segment is assumed always to be covered by the process liquid. Its capacitance is proportional to the electrical character of the process material. The second measurement uses the level probe. Its output is proportional to the level times the electrical character of the process fluid. By dividing the output of the level probe by the output of the composition probe, the transmitter output becomes independent of the electrical properties. Please note that conductive coatings can cause large inaccuracies in these particular transmitters. Even so, conducting liquids that do not coat will be measured with accuracy equal to the insulating ones. For the sake of utility, both probe segments are usually provided, coaxially, in the same assembly. It is also possible to use two completely separate probes, with the composition probe mounted horizontally below the tip of the level probe. Inaccuracy can be limited to 0.5% over a wide range of electrical values and a wide temperature range.

Continuous Liquid–Liquid Interface

Two elements are key to successful interface level measurement: immunity to total level variation and maximum margin between the signal contribution of the organic and aqueous

© 2003 by Béla Lipták

phases. Making the probe inactive down to a point that *always* will be covered by liquid can negate variation in total level. Of course, *packed* vessels and separators on overflow do not exhibit the problem. The primary item to minimize the signal from organics is to maximize the distance to ground. Low K is another positive item. The only practical way it can be varied is by better separation to exclude the high K aqueous content. Concentric ground references, small-diameter stilling wells, and external standpipes, by bringing the ground closer, make the measurement more sensitive to changes in the organic phase. The ideal mounting is in the center of the tank, with no metal nearby.

Maximizing the aqueous contribution means using a probe insulation with the highest feasible capacitance. A good margin would be one in which the aqueous contributes 300 pF/ft and the organic 8 pF/ft. Regardless, many very satisfactory separators in the heavy oil fields operate with an 80- to 30-pF/ft margin. The limitations on maximum probe capacitance include fragility (thinner coatings have higher capacitance), temperature (TFE and PFA have the lowest K of common polymers and highest temperature capability), and chemical compatibility (again, the low-K insulators are most inert chemically).

The question of an intermediate emulsion or *rag layer* adds a bit of confusion to the measurement. Users often desire a measurement at the bottom of the rag, but that area is generally very close to the aqueous in conductivity. The point sensed by the continuous probe is always that at which the emulsion reverses from organic continuous (aqueous drops in organic matrix) to aqueous continuous (organic drops surrounded by aqueous liquid). In liquids with distinctly different colors, users often believe that the instrument is not functioning correctly. The visual interface typically does not coincide with the electrical interface except in the rare case of perfect separation. This means that sight glasses are useless for calibration of interface transmitters. Sample taps are more valuable, but only if the electrical conductivity of the sample, rather than color and viscosity, is observed.

Users often lose sight of the fact that the instruments *cannot* separate the components. The first criterion for accurate interface control is good separation. This may entail more or better emulsion-breaking chemicals, longer residence time (less throughput), higher temperature, or additional mechanical or electrical aid to coalescence. The idea that certain instruments can produce lower organic in the aqueous stream, less water in the organic stream, *and* raise throughput is total baloney. In many cases, separators are run above the design throughput, so something needs to be done to accelerate separation if product quality is to be maintained. For best results, the probe should be located as far from the inlet as possible, where the best separation will have occurred.

The most frequent use of interface transmitters is in horizontal separators, where the total level is usually maintained by overflow, and the interface is maintained by controlling the aqueous dump valve. A whole other class of application has been largely ignored because of the difficulty in getting the probe to the interface area. That application, sometimes called *water bottoms*, measures the water level beneath organic products (usually fuels) in large storage tanks. Typically, this involves measuring a few inches of water at the bottom of 40-ft (15-m) or taller tanks. Dropping a short probe, attached by a cable or pipe, down from the top of the tank is pretty straightforward unless the tank has a floating roof. The most successful floating-roof applications have used a 45° hot-tapped nozzle near the bottom of the tank. Because the tank is seldom empty, it generally requires a probe to be inserted through a sliding seal under pressure.

Granular Solids

The most common problem in granular measurements is caused by moisture variation in insulating materials, which represent the majority of granular solids. Since water has a nominal $K = 80$, and the typical solids are in the $K = 2$ area, small variations in water content can produce large percentage changes in $K - 1.0$ and, hence, the slope of the input/output curve. If the particular granular produces a similar change in conductivity, subtracting the resistive phase of RF current from the capacitive component can compensate moisture variation over a particular range of water content. The same instrument that provides electronic coating rejection, for example, compensates grains of wheat, corn, and rice. These whole grains produce capacitive and conductive RF current components that are affected equally by moisture variation in the 8 to 20% water range. By subtracting the resistive component from the capacitive, the effect of these changes is eliminated.

At the opposite end of the moisture spectrum, very dry (<0.1% H_2O) insulators produce high-voltage static discharge when conveyed into silos. The probe appears to be a ground element to these highly charged materials, and substantial voltages can be coupled into the electronic unit, where semiconductors are easily destroyed. It is necessary to protect the electronics by shorting these voltages to ground before they reach transistors and microcircuits. The protection elements should be capable of handling peak short-term current of at least 10 A, and a 100-A capability is sometimes required.

Probes will require a parallel ground reference, just as in insulating liquids. A surrounding intrinsic ground reference is obviously not an option in granulars. The straight-sided bin or silo wall is the best choice. This precludes accurate measurement in cone bottoms, which hopefully represent a very small percentage of bin capacity. Rigid probe rods are usually limited to about 10 ft. Flexible cable sensors have been used up to 200 ft in length. To avoid probe movement, which can change the capacitance and hence the calibration, flexible probes with a weight should be mounted directly above the dump location so that material flow will tend to keep them in position. If the probe can't be located there, it will need to be anchored to the silo floor or some other structural element. The mounting location should be so strong and stiff that force on the probe is insufficient to deform the

© 2003 by Béla Lipták

tank roof. Do not expect vendors to predict what force will be produced, as they have neither sufficient application details nor expertise.

Conducting granulars are relatively few and far between. This is unfortunate, because they can be measured more accurately and with less trouble than the more numerous insulating materials. Because the ground is carried right to the probe insulation, weighted probes are not sensitive to the distance to the tank walls and can be allowed to wander without a noticeable change in calibration. Conversely, the probe will read every inch of conductive material in contact with it. Since granulars are notable for angle of repose, these probes should be located at the point of minimum angle-of-repose error.

Glossary

Admittance (A). The reciprocal of the impedance of a circuit. Admittance of an AC circuit is analogous to the conductance of a DC circuit. Expressed in units of siemens (S).

Capacitance (C). The property of an electrical insulator that permits the storage of energy through electric displacement when opposite surfaces are held at different voltages. This is the property that allows AC current to appear to flow through an insulator. Expressed in units of farads.

Capacitive component. AC current can be separated into two components; current with a phase relation to the excitation voltage of +90° is called the *capacitive component.*

Capacitor. A device consisting of two conductors electrically isolated by an insulator. The conductors are called *plates,* and the insulator is referred to as the *dielectric*. The larger the capacitor, the smaller its impedance and the more AC current will flow through it.

Coax. Jargon meaning *coaxial cable*, which consists of a center wire surrounded by low-*K* insulation, surrounded by a second shield conductor. It has the characteristics of low capacitance and inductance for transmission of high-frequency current.

Conductance (G). The reciprocal of resistance. Expressed in units of siemens (formerly called *mhos*).

Conductivity (g). The reciprocal of resistivity. All solids and liquids have some degree of conductivity. For the purpose of this section, any material above 1 μS/cm will be considered to be conductive (for example, most metals, water with any ions present, coke, carbon black, soaking-wet insulators, and aqueous-external emulsions). Expressed in units of siemens/cm.

CPVC. Chlorinated polyvinyl chloride, a low-cost, reasonably inert polymer used for some noninsertion sensors. It is easily solvent welded. Its maximum temperature range is about 225°F.

Deionized. Refers to water of extremely high purity, with few ions to carry current. If exposed to air for any significant period, it will have a conductivity of about 5 μS/cm because of dissolved CO_2.

Dielectric. An electrical insulator (includes metal oxides, plastics, and hydrocarbons).

Dielectric compensation. A scheme by which changes in insulating liquid composition or temperature can be prevented from causing any output error. It requires a second sensor and homogeneous liquid.

Dielectric constant (K). A unit expressing the relative charge storage capability of various insulators (see Table 3.3p). Full vacuum is defined as 1.0, and all gases are indistinguishable for practical purposes. TFE has a dielectric constant of 2.0, cold water about 80. This is expressed in unitless numbers, because this is the ratio of absolute dielectric constant to that of vacuum.

Farad (F). A unit of capacitance. Because this is a very large unit, a unit equal to one trillionth of a farad (the picofarad, pF) is commonly used in RF circuits.

FEP. Fluorinated ethylene propylene, a fluorocarbon that is extremely chemically inert. It melts at a reasonable temperature and can be plastic welded fairly easily. It is difficult to bond with adhesives. Maximum temperature range is limited to the 300°F (150°C) area.

Guard. The *electronic guard* (called a *shield* in some RF-level literature) consists of a concentric metallic element with an applied voltage that is identical to the voltage on the conductor it is "guarding." This negates the capacitance between the guarded conductor and the outside world.

Impedance (Z). The opposition to the flow of alternating current. Impedance in AC circuits is analogous to resistance in DC circuits. Expressed in units of ohms (Ω).

PE. Polyethylene, a low-temperature insulation that is compatible with a wide range of corrosives but is attacked by most petroleum products. Generally limited to situations in which fluoro- and chlorocarbons are not allowed, such as the tobacco and nuclear power industries. Maximum allowable temperature is in the 180°F (80°C) area.

PEEK. Polyether ether ketone, a high-temperature, injection molded polymer that is chemically quite inert. This material has wide chemical application. Temperature capability is high at 450 to 500°F (225 to 260°C). Avoid any liquids with "phenol" in their names. Adhesive bonding to the molded parts would be difficult.

PFA. Perfluoroalkoxy, a fluorocarbon that is quite inert chemically, melts at a fairly high temperature, and is easily plastic welded. It can be used up to 550°F (290°C) but, as a probe insulation, it is generally limited to 350°F (175°C) because of bonding limitations with the metal rod.

© 2003 by Béla Lipták

TABLE 3.3p
Table of Nominal Dielectric Constants for Some Common Materials

Solids

	Dielectric Constant		*Dielectric Constant*
Acetic acid	4.1	Phenol	4.3
Asbestos	4.8	Polyethylene	4.5
Asphalt	2.7	Polypropylene	1.5
Bakelite	5.0	Porcelain	5.7
Calcium carbonate	9.1	Quartz	4.3
Cellulose	3.9	Rubber (hard)	3.0
Ferrous oxide	14.2	Sand	3.5
Glass	3.7	Sulfur	3.4
Lead oxide	25.9	Sugar	3.0
Magnesium oxide	9.7	Urea	3.5
Naphthalene	2.5	Zinc sulfide	8.2
Nylon	45.0	Teflon®	2.0
Paper	2.0		

Liquids

	Temp. °F/°C	*Dielectric Constant*		*Temp. °F/°C*	*Dielectric Constant*
Acetone	71/22	21.4	Heptane	68/20	1.9
Ammonia	–27/–33	22.4	Hexane	68/20	1.9
Ailine	32/0	7.8	Hydrogen chloride	82/28	4.6
Benzene	68/20	2.3	Iodine	224/107	118.0
Benzil	202/94	13.0	Kerosene	70/21	1.8
Bromine	68/20	3.1	Methanol	77/25	33.6
Butane	30/–1	1.4	Methyl alcohol	68/20	33.1
Carbon tetrachloride	68/20	2.2	Methyl ether	78/26	5.0
Castor oil	60/16	4.7	Mineral oil	80/27	2.1
Chlorine	32/0	2.0	Naphthalene	68/20	2.5
Chloroform	32/0	5.5	Octane	68/20	2.0
Cumene	68/20	2.4	Pentane	68/20	1.8
Cyclohexane	68/20	2.0	Phenol	118/47	9.9
Dimethylheptane	68/20	1.9	Phosgene	32/0	4.7
Dimethylpentane	68/20	1.9	Propane	32/0	1.6
Dowtherm®	70/21	3.3	Pyridine	68/20	12.5
Ethanol	77/25	24.3	Styrene	77/25	2.4
Ethyl acetate	68/20	6.4	Sulfur	752/400	3.4
Ethyl benzene	68/20	2.5	Toluene	68/20	2.4
Ethylene chloride	68/20	10.5	Urethane	74/23	3.2
Ethyl ether	68/20	4.3	Vinyl ether	68/20	3.9
Ethyl benzene	76/24	3.0	Water	68/20	80.0
Formic acid	60/16	58.5	Water	32/0	88.0
Freon 12	70/21	2.4	Water	212/100	48.0
Glycol	68/20	41.2	Xylene	68/20	2.4

© 2003 by Béla Lipták

PP. Polypropylene, similar to PE. Used for low cost and where fluoro- and chlorocarbons are excluded. Maximum temperature is in the area of 200°F.

PVDF. Polyvinylidene fluoride. This fluorocarbon has substantially lower temperature limits than the others (250°F or 120°C) and is less inert chemically. It is dissolved by the ketones (acetone, MEK, MIBK) and attacked by benzene and high concentrations of sulfuric acid. The most insidious enemy is caustic, which causes brittleness and cracking. It has much better toughness and abrasion resistance than the other fluorocarbons as well as unique electrical properties ($K = 8$).

Radio frequency (RF). A frequency that is higher than sonic but less than infrared. The low end of the RF range is 20 kHz, and its high end is around 100,000 MHz.

Radio frequency interference (RFI). A phenomenon in which electromagnetic waves from one source interfere with the performance of another electrical device.

Reactance (X). That part of the impedance of a circuit that is caused by either capacitance, inductance, or both. Expressed in units of ohms (Ω).

Rear mount. A technique for making long inactive sections by mounting the probe on the end of a pipe, with its coax cable running through the pipe to the top of the tank. The coax must survive the process temperature, so it is often of high-temperature construction.

Resistance (R). The opposition offered by an electrical conductor to the flow of direct electric current. Expressed in units of ohms (Ω).

Resistive component. AC current can be separated into two components. The portion that is in phase with the excitation voltage is called the resistive component.

Resistivity (ρ). This is the property of a conductive material that determines how much resistance a unit cube will produce. Expressed in units of ohm-centimeters (Ω-cm).

Saturation. A condition in which probe-to-ground RF current is determined solely by the impedance of the probe insulation. Increased conductivity in the saturating medium, even to infinity, will not cause a noticeable change in that current or in the transmitter output.

*(P)TFE.** Tetrafluoroethylene (the *P* stands for *polymerized*, which is understood). The oldest, highest temperature, and most inert fluorocarbon probe insulation. Extremely difficult to adhesive bond, it is usable up to 550°F (290°C). On probes, its temperature limit is determined by the type of bonding to the probe rod (300, 450, or 550°F). This is the most common probe insulation in the industry. Because it never melts (but disintegrates, producing HF, at >600°F), it is difficult to fabricate, impossible to plastic weld, and exhibits a high degree of microporosity. Can be destroyed by butadiene and styrene monomer.

* Most people interchange the name Teflon® with TFE. This is *completely* incorrect but understandable. TFE was the first fluorocarbon polymer to carry the trade name Teflon at E. I. DuPont. Dupont chose to use the Teflon trade name for a whole *family* of fluorocarbon resins, so FEP and PFA made by Dupont are also called Teflon. To complicate the matter, other companies now manufacture TFE, FEP, and PFA, which legally cannot be Teflon, since that name applies only to DuPont-made polymers.

TECHNOLOGY

The purpose of this section is to help the more technically inclined to understand just what is happening in a particular application. It is not necessary to personally make good use of this information. Your friendly vendor will be glad to take the necessary steps to ensure a good result with the instruments you purchase.

Analysis of RF probe circuits requires little more than a knowledge of AC circuits. The simplest situation is the bare probe mounted in the center of a vertical, cylindrical tank (Figure 3.3q). The expression for C_2 and C_3 is the formula for a concentric capacitor and can also be used to calculate the capacitance of probe insulation. (To do so, use $K = 2$ for TFE, PFA, FEP, PE, and PP. Use $K = 8$ for PVDF.) The length units are inches, and the diameters can be any units as long as both are the same. A good approximation of C_1 is 20 pF. For rough estimates of air capacitance in tanks that are not cylindrical and/or not concentric, 0.35 pF/in. is a good rule of thumb. If the probe is within 1 ft of the wall, it will be higher. A probe in the center of the tank is least sensitive to position. Capacitance increases as the distance to ground is reduced. In the center of the tank, motion toward one wall increases the distance to the opposite wall, so the capacitance is nearly constant. Close to the wall, the capacitance increases rapidly with any reduction in the distance. The capacitance produced by any insulating liquid will be its K times the air capacitance.

The insulated probe complicates the calculation because of the nonlinear combination of series capacitors (Figure 3.3n). The equation shown is correct for insulating liquids. For conducting liquids (assuming saturation), the third term is reduced to C_5, because the low resistance represents a short circuit to ground. In the case of a liquid–liquid interface, the organic phase would substitute for the air space shown. The K of the organic phase must be measured based on an upper phase sample at operating temperature. The amount of aqueous phase held in the organic will be a function of temperature as well as throughput. Table 3.3p is a list of nominal dielectric constants, which can be used to make rough estimates of what capacitance will result from a particular probe geometry.

© 2003 by Béla Lipták

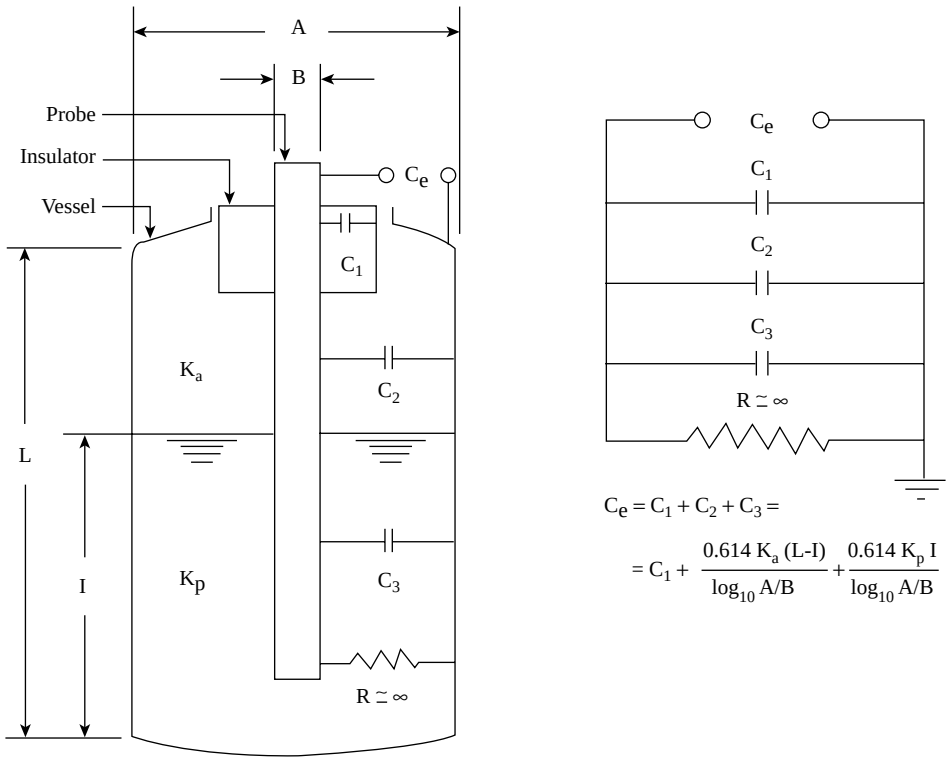

FIG. 3.3q
Electrical representation of a bare probe in an insulating liquid. (Courtesy of The Foxboro Co.)

CONCLUSION

Early capacitance probes had the advantages of simplicity, relatively low cost, corrosion resistance, and a lack of moving parts. In addition, the proximity design required no contact with the process fluid. On the other hand, these early capacitance probe designs were subject to errors resulting from changes in the dielectric constant of insulating process fluids, to errors resulting from the tank geometry and fiberglass construction, and to conductive coating buildup on the probes. In the newer designs, these problems have been largely solved by increasing the operating frequency, incorporating a phase detector component in the electronic circuits, and modifying the design of the sensors and their guards. These improvements have made the capacitance/RF admittance type probes a powerful means of level detection. The only types of measurements that are still excluded with these instruments are interfaces between two conductive liquids or the liquid–solid interface. A major maintenance problem is water in the head assembly that results from incorrect conduit routing and venting. The head may be potted with two-component RTV to eliminate this problem.

Bibliography

Andreiev, N., Survey and guide to liquid and solid level sensing, *Control Eng.*, May 1973.

API Recommended Practice 550, *Manual on Installation of Refinery Instruments and Control Systems*, Part I, Process Instrumentation and Control, Section 2, Level, American Petroleum Institute, Washington, DC.

Belsterling, C. A., A look at level measurement methods, *Instrum. Control Syst.*, April 1981.

Capacitance method for liquid-depth measurement, *Electron. Power*, December 1967.

Dinkel, J. A., Universal capacitance probe liquid level measuring system, *Rev. Sci. Instrum.*, November 1966.

Duncan, J. and Dutton, W., Capacitance probe confirms presence of liquid NH_3 when unloading, *CIM Bull.*, January 1978.

Hall, J., Measuring interface levels, *Instrum. Control Syst.*, October 1981.

Herbster, E. J. and Roth, J. H., How to gage by capacitance, *ISA J.*, June 1965.

Lawford, V. N., How to select liquid-level instruments, *Chemical Eng.*, October 15, 1973.

Lerner, J., Continuous level measurement: an introduction to 16 basic types, *Control*, November 1990.

Mital, P. K., Capacitor sensor monitors stored liquid level, *Electronics*, October 30, 1967.

Morris, H. M., Level instrumentation from soup to nuts, *Control Eng.*, March 1978.

Preshkov, V. P., Capacitance liquid helium level indicator, *Cryogenics*, April 1969.

Proximity sensors, capacitive, *Meas. Control*, February 1991.

Ritz, G., Choosing the right solids level sensor, *Control*, January 1994.

Schonfeld, S., Capacitance gaging checks spacecraft fuel level, *Hydraulics and Pneumatics*, April 1967.

Schuler, E., *A Practical Guide to RF Level Controls*, Drexelbrook Engineering Co., Horsham, PA, 1989.

Tavis, R., How to mount a capacitance level-sensing probe in your vessel, *Powder and Bulk Solids*, 19, April 2000.

Weiss, W. I., Capacitance level control, *ISA J.*, November 1966.

© 2003 by Béla Lipták

3.4 Conductivity and Field-Effect Level Switches

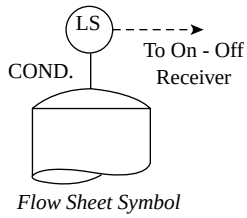

Flow Sheet Symbol

D. S. KAYSER (1982) **B. G. LIPTÁK** (1969, 1995, 2003)

Applications	Point detection or differential detection of level of conductive liquids or slurries having dielectric constants of 20 or above. For electric switches, the maximum fluid resistivity is 20,000 Ω/cm; electronic types can work on even more resistive fluids. Field-effect probes are used on both solids and liquids, and they can be conductive or nonconductive.
Design Pressure	Up to 3000 PSIG (21 MPa) for conductivity probes, 100 PSIG (6.9 bars, or 0.69 MPa) for field conductivity probes
Design Temperatures	Operating ranges for conductivity-type level switches are from −15°F (−26°C) to 140°F (60°C) for units with integral electronics and from −15°F (−26°C) to 1880°F (982°C) for units with remote electronics. Field-effect probes can operate at up to 212°F (100°C).
Materials of Construction	Conductivity probes are made out of type 316 stainless steel, Hastelloy®, titanium, or Carpenter 20 rods with Teflon®, Kynar, or PVC sleeves. Housings are usually made of corrosion-resistant plastic or aluminum for NEMA 4 and 12 service. The field effect probes are available with a Ryton™ probe with aluminum housing.
Probe Lengths	Conductivity probes with 0.25 in. (6 mm) solid rods are available in lengths up to 6 ft (1.8 m); 1/16-in. (2-mm) stainless-steel cables can be obtained in lengths up to 100 ft (30 m). The length of field-effect probes is 8 in. (200 mm).
Sensitivity	Adjustable from 0 to 50,000 Ω for conductivity probes
Inaccuracy	0.125 in. (3 mm)
Cost	From $100 to $500. The typical price of an industrial conductivity switch is about $300.
Partial List of Suppliers	AMETEK Drexelbrook (www.drexelbrook.com) Bindicator (www.bindicator.com) B/W Technologies (www.gasmonitors.com) Conax Buffalo Technologies (www.conaxbuffalo.com) Endress+Hauser Inc. (www.us.endress.com) Lumenite Control Technology Inc. (www.lumenite.com) Magnetrol International (www.magnetrol.com) Monitor Technologies LLC (www.monitortech.com) National Instruments (www.ni.com) Omega Engineering Inc. (www.omega.com) Rosemount Inc. (www.rosemount.com)

Conductance is the inverse of resistance ($G = 1/R$). The conductivity of a substance is defined as the conductance (G) of cylindrical column of that substance, which is 1.0 cm long and 1.0 cm^2 in area. The units of conductivity are in siemens per centimeter (S/cm) or in mhos (siemens and mhos are different terms for the same unit). The ability of a liquid to conduct electricity is a function of the number of charged ions in that solution. Deionized pure water has very high

© 2003 by Béla Lipták

resistance, but liquids such as sewage water, sea water, and city water are quite conductive. In fact, the conductivity of most liquids is much higher than that of air. Therefore, if an electrical circuit is closed by the substance surrounding the tip of a probe, the resulting current flow will be much higher when the probe is submerged in the liquid that when it is the air space above it. Conductivity-type level switches discriminate between air and liquid by that method.

CONDUCTIVITY-TYPE LEVEL SWITCH

The process fluid itself closes an electric circuit when the air–liquid interface rises to contact the level probe (Figure 3.4a). The dual-tip probe of this design eliminates the need for grounded metallic tanks and can be used to detect both levels and interfaces between conductive and nonconductive liquids. The current flow is at the microampere level, which removes the hazards of shock and sparking. The sensitivity of the switch is adjusted to match the conductivity of the process liquid.

In grounded metallic tanks, the level probes are usually installed vertically. If the liquid in the tank is agitated or is turbulent for other reasons, it is desirable to employ two electrodes in detecting a single level point (Figure 3.4b). The small vertical distance between the two probes provides a dead band or neutral zone, which protects against cycling in case of splashing inside the tank. A 0- to 20-sec time delay is also available serving the same purpose.

Figure 3.4c illustrates a conductivity level probe installed in a grounded tank. One electrode is shown above the liquid level on the left side of the sketch. The circuit on the left, therefore, is open, no current is flowing through the relay coil, and the load contact is open. When the liquid level rises, as shown on the right side of the sketch, a conductive path between the electrode and the grounded tank is established,

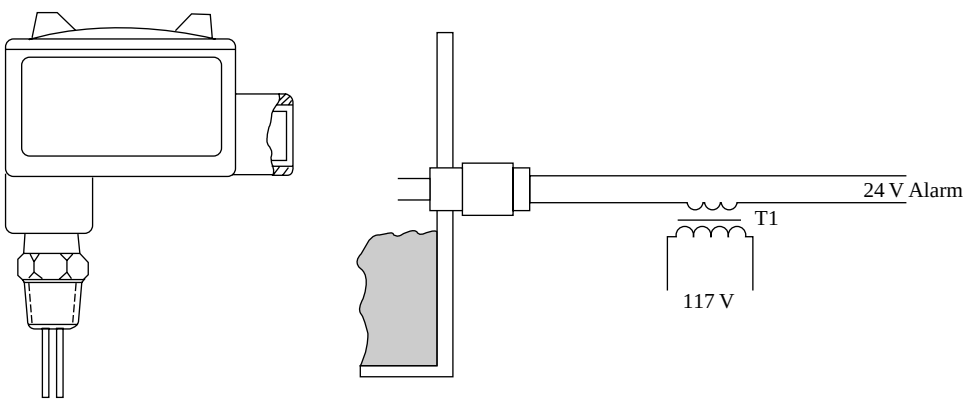

FIG. 3.4a
Explosion-proof conductivity switch with dual-tip sensor operates at microampere current levels and eliminates the need for a grounded metallic tank. (Courtesy of Revere Corp. of America.)

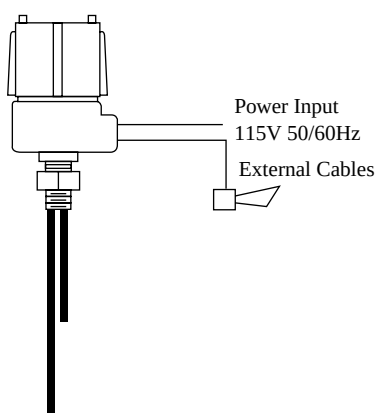

FIG. 3.4b
Dual-probe conductivity switch. (Courtesy of Endress+Hauser.)

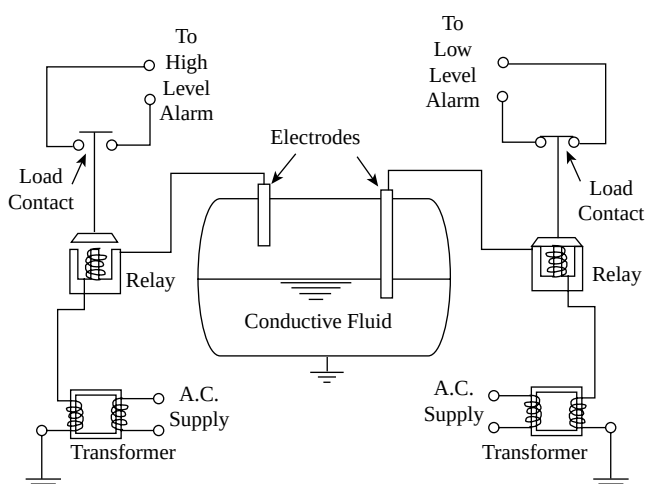

FIG. 3.4c
Single-point conductivity switch.

© 2003 by Béla Lipták

closing the circuit through the relay coil. Energizing the relay closes the load contact, which, in turn, can operate pumps, solenoid valves, and other processing equipment. In this system, the liquid in the tank acts as a switch in the relay circuit. Although electromechanical relays are shown in the figure, these days, the solid-state relays are more commonly used. If the tank is fabricated of fiberglass or other insulating material, the switching circuit is configured between the sensing probe and a reference probe (Figures 3.4a and 3.4b).

Pump Alternator Circuit

Because these switches are available in a variety of configurations, they can be used for the on–off control of one piece of equipment or for the staged control of several pieces of equipment. When two pumps are installed in the same on–off service, it is desirable to automatically alternate the pumps so that they will wear evenly and so that "hot starting" of pump motors is reduced. Figure 3.4d shows how one level switch with two conductivity probes can be used in conjunction with an electromechanical alternator to cycle the pumps.

As level rises, the LSL contact of probe 1 will close, because this contact is operated by the lower probe. The control relay CR remains de-energized with its contact CR-2 closed and contacts CR-1 and CR-3 open. When the level rises to a higher level, the LSH contact of probe 2 closes, thereby energizing CR, which, in turn, closes contacts CR-1 and CR-3 and opens CR-2. The relay CR will remain energized after the level drops below and the LSH contact opens, because CR-1 is still closed. With CR energized, CR-3 is closed, and the circuits that are connected to contact A of the position switch and to contact 1 of the sequence switch are energized. The circuit connected to contact A starts the alternator switch motor, which, in turn, moves the position switch to contact B. This de-energizes the switch motor, because the CR-2 contact is held open by CR, which is energized. The circuit through contact 1 of the sequence switch energizes M1, which is the starter coil for the motor associated with the pump 1, and the first pump starts.

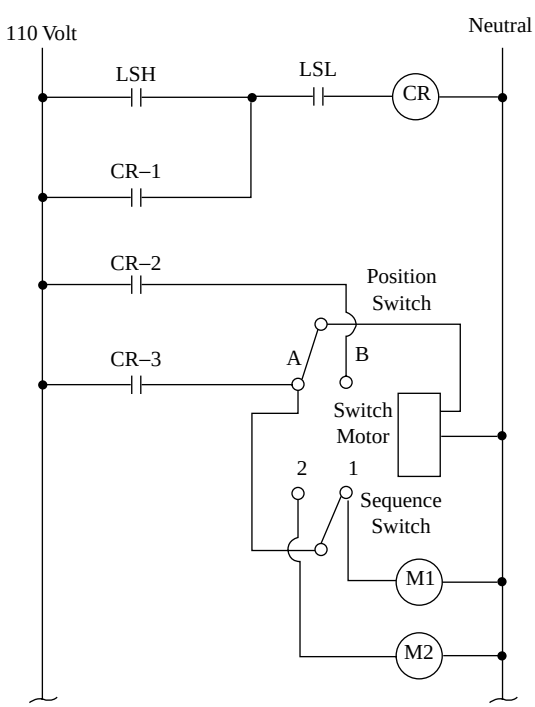

FIG. 3.4d
Pump down alternator circuit. M1 = first pump; M2 = second pump.

When the level falls below the level of the LSL probe tip, relay CR is de-energized, which opens contacts CR-1 and CR-3 and opens CR-2. Dropping out CR-3 stops the motor (M1) associated with the first pump. The closing of CR-2 energizes the switch motor, which steps to move the sequence switch to contact 2 and moves the position switch back to contact A. As a consequence, on a subsequent rise in level, M2 will be energized, and the second pump will start. This is the most basic of the pump-down alternator circuits. A similar circuit can be designed for pump-up applications, and a wide variety of additional control requirements can be met if the numbers of probes and relays are increased.

Advantages and Limitations

The advantages of the conductivity switch include low cost, simple design, and elimination of moving parts in contact with the process material. Conductivity-type level switches can also be used to detect the level of moist bulk solids. The three-probe-element design can also provide differential level control.

The disadvantages include the possibility of sparking when the liquid level is close to the tip of the probe. Such phenomena are eliminated in the solid-state designs, which are rated for intrinsic safe operations. The conductivity switch is also limited to conductive (below 108 Ω resistivity) and noncoating process applications. One should also consider the possible harmful side effects of electrolytic corrosion of the electrode. Electrolysis can be reduced, but not eliminated, by using AC currents.

Conductivity switches are rarely used in chemical processing services. However, they are routinely used in the food, paper, and wastewater industries and in other water-level applications, including those on steam drums operated at up to 3000 PSIG (21 MPa). Specialized applications also include the measurement of the level of molten glass, which is a conductor at elevated temperatures.

FIELD-EFFECT LEVEL SWITCHES

As illustrated in Figure 3.4e, the field-effect probe creates a field between a metallic cap cast into a Ryton probe and the metal in the tank or in the probe gland and probe housing. When a conductive or nonconductive liquid, slurry, or solid material (with electrical characteristics different from that of air) breaks the field lines, the high-frequency current increases, and the relay trips. The probe should be installed horizontally

© 2003 by Béla Lipták

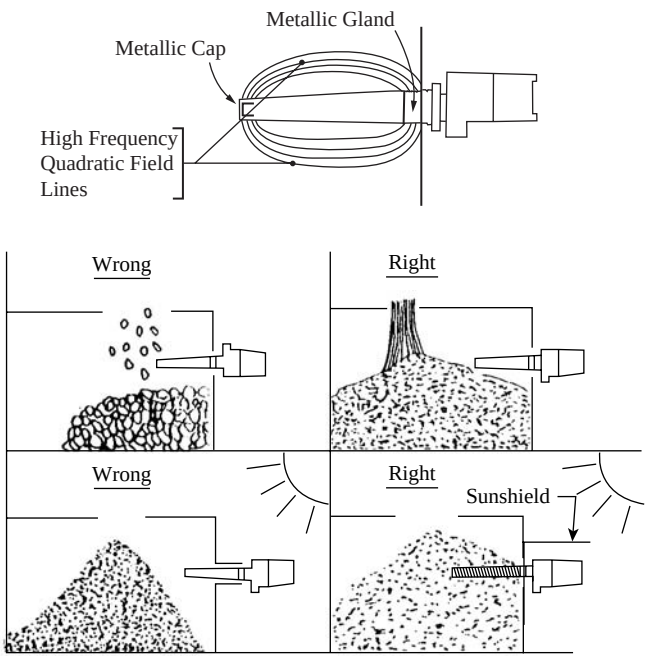

FIG. 3.4e
The field effect level switch and its installation. (Courtesy of Endress+ Hauser Inc.)

(as shown in Figure 3.4e), with a small downward angle, if installed on slurry services.

The Ryton probe material is unaffected by solvents if the operating temperature is under 212°F (100°C). The probe is 8 in. (200 mm) long and requires a 1.5-in. NPT tank connection. As illustrated in Figure 3.4e, it is advisable to protect the probe form the impact of the flowing solids and to protect the electronics from direct sunshine.

Bibliography

Andreiev, N., Survey and guide to liquid and solid level sensing, *Control Eng.*, May 1973.

Bahner, M., A practical overview of continuous level measurement technologies, *Flow Control*, June–July, 1997.

Belsterling, C. A., A look at level measurement methods, *Instrum. Control Syst.*, April 1981.

Berto, F. J., Technology review of tank measurement errors reveals techniques for greater accuracy, *Oil & Gas J.*, March 3, 1997.

Cho, C. H., *Measurement and Control of Liquid Level*, ISA, Research Triangle Park, NC, 1982.

Control level under fouling conditions, *Hydrocarbon Processing*, November 2000.

Hall, J., Measuring interface levels, *Instrum. Control Syst.*, October 1981.

How can we measure level of petroleum sludge? *Control*, August 1999.

Hughes, T. A., *Measurement and Control Basics*, 3rd ed., ISA, Research Triangle Park, NC, 2002.

Johnson, D., Level sensing in hostile environments, *Control Engineering*, August 2001.

Lawford, V. N., How to select liquid-level instruments, *Chemical Eng.*, October 15, 1973.

Level measurement and control, *Meas. Control*, April 1991.

Noltingk, B. E., *Instrumentation Reference Book*, 2nd ed., Butterworth-Heinemann, Oxford, UK, 1996.

Nyce, D. S., Tank gauging advances, *Fuel Technology Management*, January 1997.

Parr, E. A., *Industrial Control Handbook*, 2nd ed., Butterworth-Heinemann, Oxford, UK, 1995.

Van de Kamp, W., *The Theory and Practice of Level Measurement*, 17th ed., Endress+Hauser, Greenwood, IN, 2001.

Waterbury, R. C., Liquid level measurement 101, *Control*, November 1998.

© 2003 by Béla Lipták

3.5 Diaphragm Level Detectors

D. S. KAYSER (1982) **B. G. LIPTÁK** (1969, 1995)
J. B. ROEDE (2003)

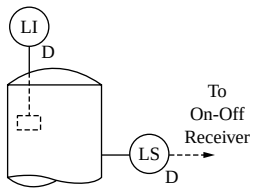

Flow Sheet Symbol

Service	Level transmitter in water wells, open tanks with immersed sensor; tank-mounted diaphragm pressure transmitter and repeaters; level switch for solids in bins and silos
Design Pressure	Switches, atmospheric; transmitters, submersible to 500 PSI (3.5 MPa); others to 5000 PSI (35 MPa)
Temperature	–40°F (–40°C) to 180°F (80°C) typical
Wetted Materials	Switches: aluminum, SS, neoprene, and various polymers. Submersibles: SS, TFE, neoprene, Buna-N, and polyethylene. Tank mounted: type 316 SS, Hastelloy®, Inconel®, and Monel®.
Ranges	Single point for solids; up to 700 ft of water for the transmitters
Inaccuracy	Single points are repeatable to about 1 in. (25 mm) on solids; transmitters are accurate to 0.5 to 1.0%, based on pressure. Level inaccuracy depends on the specific gravity of the liquid.
Cost	Switches, $150 to $500; submersibles, $350 to $600; tank mounted, $1000 to $2500
Partial List of Vendors	AMETEK-Gulton Statham Products (www.ametekpower.com) AMETEK-PMT Products (www.ametekusg.com) Anderson Instrument Co. (www.andinst.com) Barton Instrument Systems LLC (www.barton-instruments.com) Bindicator (www.bindicator.com) Delta Controls Corp. (www.deltacnt.com) Druck Inc. (www.druck.com) Fisher-Rosemount Systems (www.emersonprocess.com) Foxboro Eckardt GmbH, an Invensis Co. (www.foxboro-eckardt.com) Honeywell (www.acs.honeywell.com) Kimray Inc. (www.kimray.com) King Engineering Corp. (www.king-gage.com) Monitor Technologies LLC (www.monitortech.com) Monitrol Bin Level Mfg. Co. (www.monitrolmfg.com) Pressure Systems (www.pressuresystems.com) Scientific Technologies Inc. (www.automationsensors.com) Sensotec Inc. (www.sensotec.com) Siemens Energy and Automation-Process Industries Div. (www.sea-siemens.com) Vega Messtechnik AG (www.vega-g.de) Viatran Corp. (www.viatran.com) Yokogawa Corp. of America (www.yca.com)

© 2003 by Béla Lipták

All diaphragm detectors operate on the simple principle of detecting the force exerted by the process material against the diaphragm. The designs discussed below include diaphragm switches for liquid and solid services and diaphragm devices for continuous liquid level detection and transmission in tanks or wells.

DIAPHRAGM SWITCHES FOR SOLIDS

For solid service, diaphragm switches can be selected from a number of design variations. Devices with mercury switches can be used with materials having a bulk density of more than 30 lb/ft^3 (48 kg/m^3), whereas units with microswitches are used for lower-density services. Some of the most sensitive diaphragm switches will actuate with as little as 6 oz (171 g) of force on the diaphragm. The differential of a single diaphragm can be as high as 8 in. (200 mm), meaning that the switch will close its circuit when the solids rise to the top of the diaphragm and will open the circuit when they drop 8 in. The lower the solid density, the larger the diaphragm area required. Units are available with 4- to 10-in. (100- to 250-mm) diameter diaphragms. As illustrated in Figure 3.5a, there are three ways to install these detectors. They can be suspended on a support pipe to provide for quick adjustment of the switch position, they can be mounted on the inside wall of thick-walled silos, or, as is most commonly done, they can be externally mounted on thin-walled bins and silos. The mounting location should always be selected to guarantee the free flow of solids to and from the diaphragm area.

As shown in Figure 3.5a, diaphragm-type switches for solids can serve several purposes. Switch 1 protects against overfilling, switch 2 signals low supply level, and switch 3 indicates choke-up in the screw conveyor. Diaphragm 4 detects overfeeding the elevator boot, and diaphragm 5 detects plugging of the elevator discharge spout. Diaphragm switches 6 and 7, in the storage silo, will signal extreme level conditions. Switch 6 can interlock the material feed and shut it down when the storage silo is full.

In newer designs, the diaphragm itself is vibrated by built-in piezoelectric elements and, when the solids level rises up to the diaphragm, the resulting load on the diaphragm decreases the amplitude of vibration. This change in amplitude is used to trigger the level switch. This solids level switch (Figure 3.5b) is smaller, lighter, and more sensitive than the earlier designs, and its stainless-steel diaphragm (in an ABS resin body) is more rugged than the rubber diaphragms of the direct pressure-sensing units. The vibration

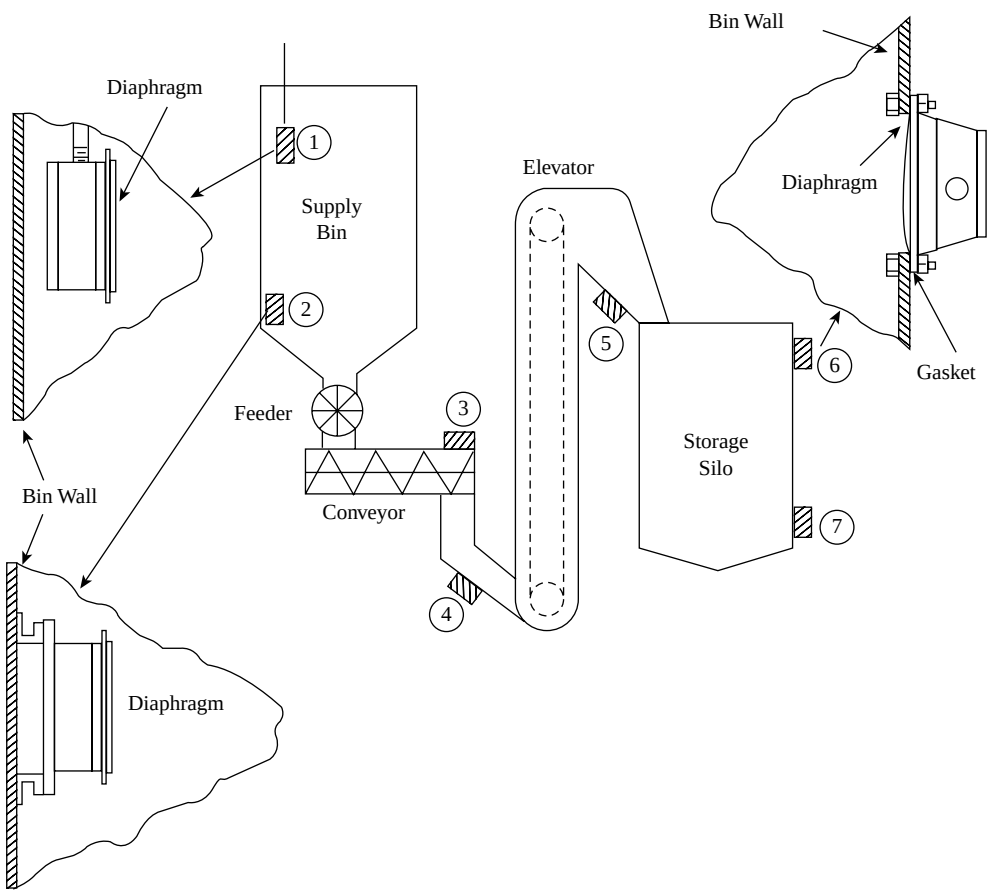

FIG. 3.5a
Use of diaphragm switches in solid services.

© 2003 by Béla Lipták

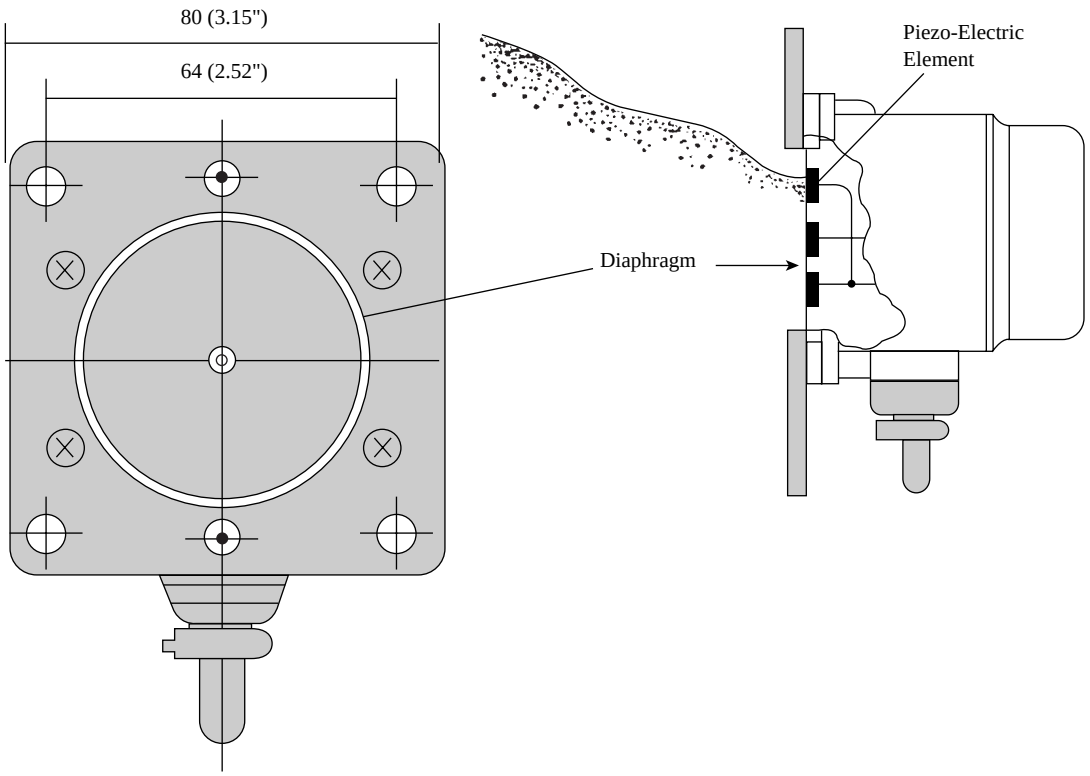

FIG. 3.5b
Vibrating diaphragm-type solids level switch. (Courtesy of Scientific Technologies Inc.)

of the diaphragm at 200 to 400 Hz reduces the probability of material sticking to the diaphragm and it also increases its sensitivity. The switch will actuate when it is 50% covered by materials with specific gravities exceeding 0.5, such as flour (0.48 to 0.55), polyethylene pellets (0.56), rice (0.58), PVC pellets (0.76), or wheat (0.77). On lighter materials, such as instant coffee (0.22) and copier toner (0.49), the diaphragm will actuate when it is 80% covered. To eliminate cycling, a 1- to 3-sec time delay is provided.

DIAPHRAGM SWITCHES FOR LIQUIDS

Figure 3.5c shows how diaphragm switches can be used to detect liquid level by sensing the pressure of a captive air column in a riser pipe beneath the diaphragm. An 8-in. (203-mm) head of liquid above the inlet of the riser pipe generally compresses the air sufficiently for switch actuation. The unit can handle a maximum of 60 ft (18 m) of liquid. The diaphragm is in contact with the captive air but not with the process. The liquid rises in the dip pipe enough to compress the enclosed mass of gas to match the level-caused pressure outside the dip pipe minus the liquid rise inside the dip tube. Physical dimensions are important. Sensitivity increases as the wetted portion of the dip tube increases and decreases in proportion to the enclosed air volume. These units can be used only on atmospheric tanks and should be considered only for applications where low cost is desired and accuracy is not a critical consideration.

DIAPHRAGM-TYPE LEVEL SENSORS AND REPEATERS

Figure 3.5d illustrates two versions of the continuous level detector, both limited to atmospheric tanks and to applications where low cost is more important than quality or accuracy of measurement. The diaphragm box unit, shown on the left side of the sketch, is similar in operation to the previously discussed riser pipe diaphragm switches except that the diaphragm isolates the captive air from the process fluid. The unit consists of an air-filled diaphragm box connected to a pressure detector via capillary tubing. Correct function depends on a large volume displacement by the diaphragm, with negligible spring constant. As the level rises above the slack diaphragm, the liquid head pressure compresses the captive air spring. The air pressure in the capillary tubing is sensed by a pressure element and displayed as an indication of level.

A one-to-one pressure repeater is illustrated on the right side of Figure 3.5d. With this unit submerged in the vessel, the static head of the liquid exerts an upward force on the diaphragm that increases as the level rises. The air supply pressure on the other side of the diaphragm opposes the upward force. The force caused by the rising level moves the diaphragm toward a bleed orifice, thus restricting its flow to atmosphere and causing the air pressure to build up until it equals the static head pressure. When the forces on the two sides of the diaphragm are equal, the unit is in equilibrium. The speed of response of the unit is changed by an adjustable restriction that, if opened, will increase sensitivity by allowing

© 2003 by Béla Lipták

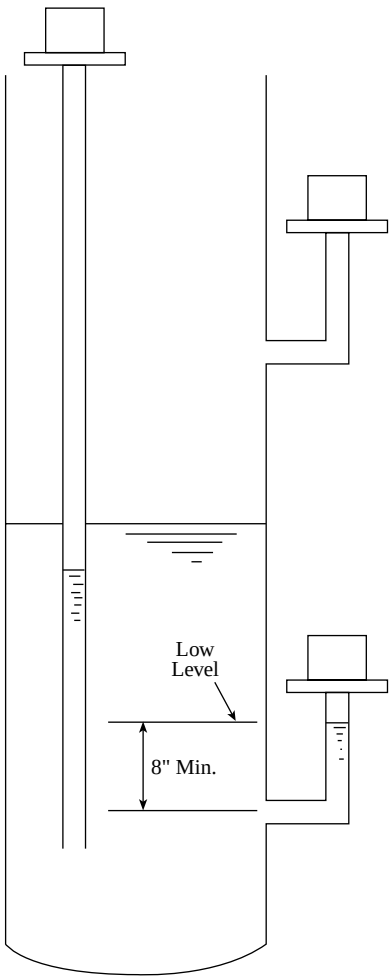

FIG. 3.5c
Diaphragm switches in liquid service.

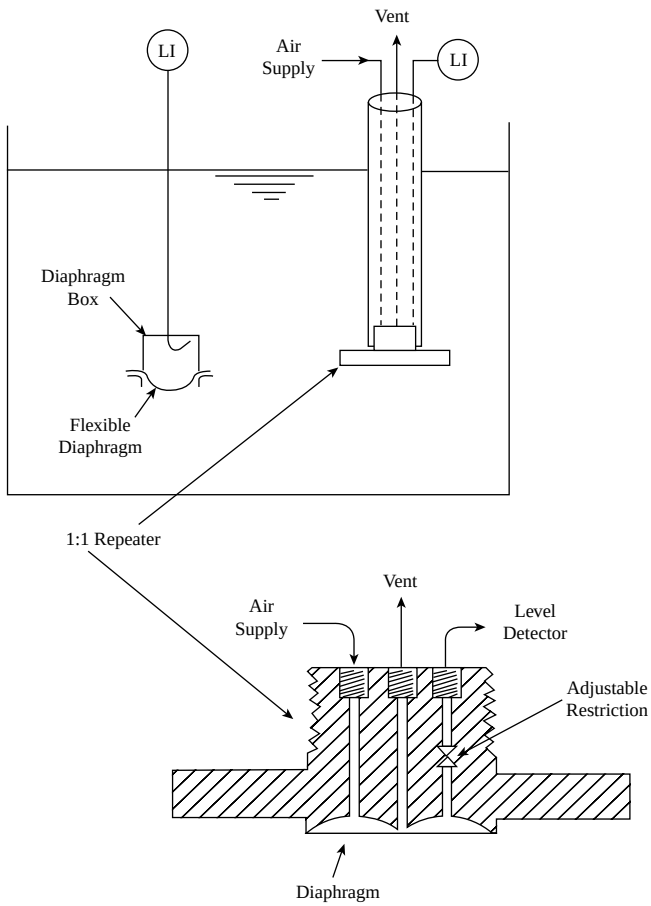

FIG. 3.5d
Diaphragm box for coupling bottom-of-tank pressure to a pressure gage (left); and 1:1 pressure repeater (right) for continuous pneumatic transmission of liquid level.

more air to flow onto the diaphragm. Air supply to the unit should be regulated at a pressure of 3 to 5 PSIG (0.2 to 0.3 bar) in excess of the maximum hydraulic head to be repeated.

The pressure repeater can be submerged, as shown in Figure 3.5d, or mounted on a nozzle near the bottom of an atmospheric tank (Figure 3.5e). These flange-mounted units are available with stainless-steel diaphragms and steel or stainless-steel bodies. They can operate with up to 160 PSIG (11 bars) air supply and can repeat hydrostatic pressures up to within 5 PSI (0.35 bars) of the air supply pressure. The air consumption of these repeaters is under 0.2 scfm (5.7 slpm). Other repeater designs, such as the extended diaphragm version, are discussed in the following section (Section 3.6), because they are used to complement differential pressure transmitters in level-measurement applications.

ELECTRONIC DIAPHRAGM LEVEL SENSORS

Most diaphragm-type pressure detectors and pressure transmitters can also be used to detect level by measuring the weight of a column of liquid in an atmospheric tank. In the unit shown in Figure 3.5f, the pressure applied to the diaphragm is transferred to a fill fluid that also fills the inner cavities. A straight-axis, twisted Bourdon tube is cantilevered from the process side to convert pressure of the fill fluid to proportional, rotary motion at its free end. A rotary variable differential transformer (RVDT) detects the rotation and converts it to an electrical signal. This particular sensor is available with ranges from 0 to 100 in. (0 to 2.5 m) of water column up to 0 to 300 PSIG (0 to 20.7 bars) and has a 150% overpressure protection over its range. Other means of transduction include strain gauges bonded directly to the diaphragm, silicon diaphragms with the strain gauges etched and diffused into the side away from the process, and capacitive sensing of the diaphragm by an internal parallel plate.

Diaphragm-type electronic pressure transmitters are available in all stainless-steel sanitary designs and are used in the food industry. They are available with 0–20 to 0–100 ft (0–6 to 0–30 m) ranges and with 4- to 20-mA DC output signals, and they are suited for process temperatures between 25 and 225°F (–4 and 107°C). They can provide level measurement accuracies (assuming constant specific gravity) of 0.5% of full-scale reading.

© 2003 by Béla Lipták

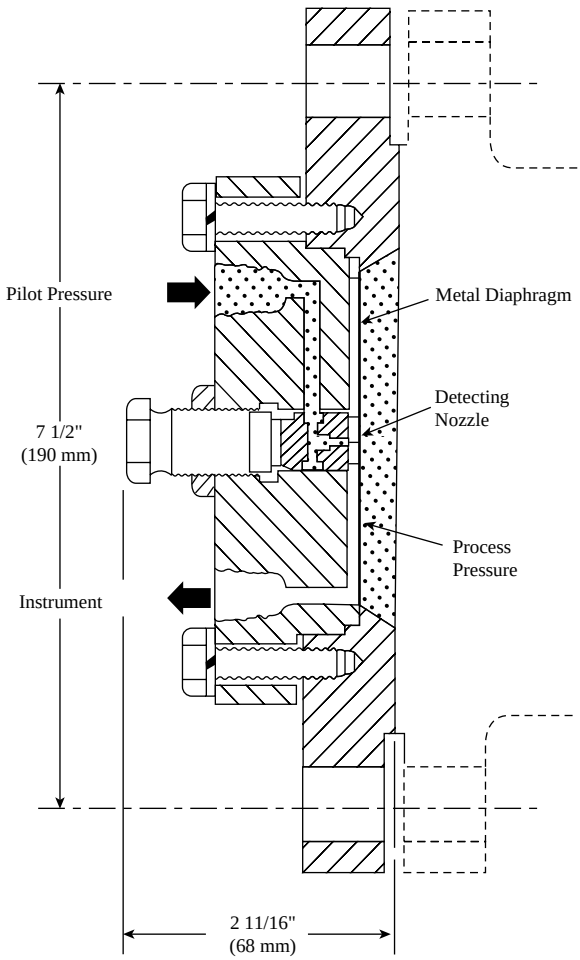

FIG. 3.5e
Pressure repeater for mounting on 4-in. (200-mm) tank nozzles. (Courtesy of Siemens Energy and Automation.)

Diaphragm-type electronic transmitters can also be submersed to detect levels in wells or in open water bodies. They are available with ranges up to 700 ft (213 m) and can be connected by cable to their readout instruments. Accessories generally supplied for these lake and well installations include digital readouts with a variety of packaging types, battery/solar cell power packs, power supplies for various line power voltages, multiple high- and low-level current relays, and optional analog (4- to 20-mA DC) or digital (RS-232, HART, Honeywell protocols) outputs.

Bibliography

Belsterling, C. A., A look at level measurement methods, *Instrum. Control Syst.*, April 1981.
Felton, B., Level measurement: ancient chore, modern tools, *InTech*, August 2001.
Hall, J., Measuring interface levels, *Instrum. Control Syst.*, October 1981.
Imsland, T., Connecting d/p elements for level sensing, *Instrum. Control Sys.*, November 1975.
Johnson, D. Checking level: not glamorous, sometimes dangerous, but necessary, *Control Eng.*, August 2001.
Koeneman, D. W., Evaluate the options for measuring process levels, *Chemical Eng.*, July 2000.
Lawford, V. N., Differential pressure instruments: the universal measurement tools, *Instrum. Technol.*, December 1974.
Lerner, J., Continuous level measurement: an introduction to 16 basic types, *Control*, November 1990.
Level measurement and control, *Meas. Control*, April 1991.
Robinson, C., Hydrostatic tank gaging: what it is, where it's used, what's available, *InTech*, February 1988.
Slomiana, M., Using differential pressure sensors for level, density, interface, and viscosity measurements, *Instrum. Technol.*, September 1979.
Submersible pressure transducers improve accuracy of pump tests, *Water World*, May 1998.

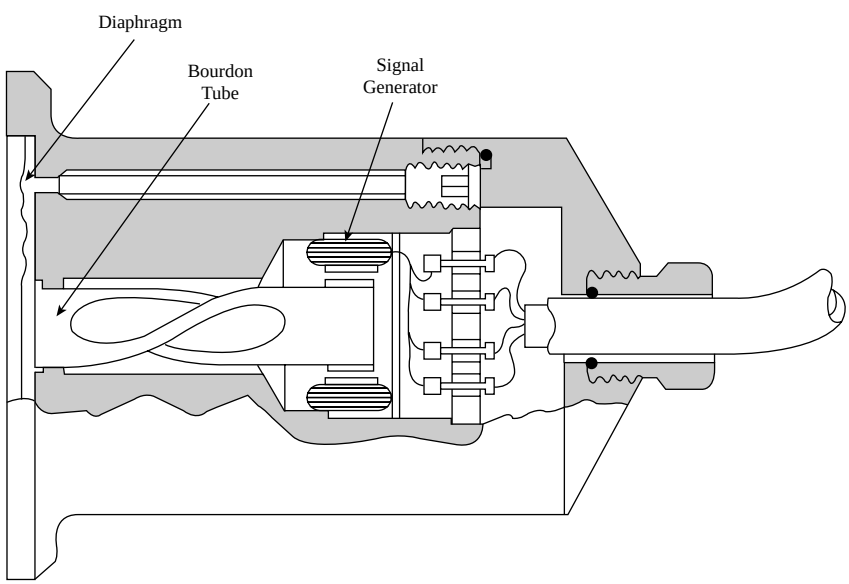

FIG. 3.5f
Electronic diaphragm level sensor with twisted bourdon/RVDT transduction.

© 2003 by Béla Lipták

3.6 Differential Pressure Level Detectors

B. G. LIPTÁK (1969) **D. S. KAYSER** (1982) **J. A. NAY** (1995, 2003)

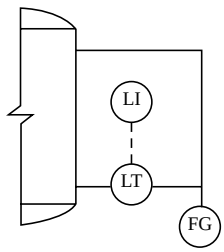

Flow Sheet Symbol

Design Pressure	To 10,000 PSIG (69 MPa)
Design Temperature	To 350°F (175°C) for differential-pressure (d/p) cell and to 1200°F (650°C) for filled systems; others to 200°F (93°C); standard electronics generally limited to 140°F (60°C)
Range	Differential-pressure cells and indicators are available with full-scale ranges as low as 0 to 5 in. (0 to 12 cm) H_2O. The higher ranges are limited only by physical tank size, since d/p cells are available with ranges over 433 ft H_2O (7 MPa or 134 m H_2O).
Inaccuracy	±0.5% to 2% of full scale for indicators and switches. For d/p transmitters, the basic error is from ±0.1% to 0.5% of the actual span. Added to this are the temperature and pressure effects on the span and zero. In case of "intelligent" transmitters, the pressure and temperature correction is automatic, and the overall error is ±0.1% to 0.2% of span with analog outputs and may approach ±0.01% with digital outputs.
Materials of Construction	Plastics, brass, steel, stainless steel, Monel®, and special alloys for the wetted parts. Enclosures and housings are available in aluminum, steel, stainless steel, and fiberglass composites, with aluminum and fiberglass being most readily available.
Cost	$200 to $1500 for transmitters in standard construction; $50 to $500 for local indicators. Add $400 to $1000 each for extended diaphragms and up to $1000 for "smart" features such as communications and digital calibration, although many "smart" features may be included in the base price. "Expert" tank systems cost approximately $1500 for each basic transmitter plus $3500 to $4500 each for one or more interface units and $1500 to $4000 for software plus a hand-held communicator and/or permanent connection to an in-house network. Some "expert" functions may be incorporated in an in-house network.
Partial List of Suppliers	See also Sections 5.6 and 5.7. Any d/p cell may be installed and connected to measure level if it has the appropriate accuracy and rangeability. Similarly, for vented tanks, any suitable gauge pressure device may be adapted to measure level. ABB Instrumentation Inc. (www.abb.com) Barton (www.ittbarton.com) Endress+Hauser Systems & Gauging (www.systems.endress.com) Enraf (www.enraf.com) Honeywell Control Products (www.honeywell.com/acs/cp/index.jsp) Rosemount Inc. (www.rosemount.com) Schlumberger Measurement Div. (www.slb.com/rms/measurement) Smar International Corp. (www.smar.com/products/function.asp) Viatran Corp (www.viatran.com) Yokogawa Corporation of America (www.yca.com)

For a general treatment of differential pressure devices, refer to Section 5.6. For a discussion of electronic pressure and differential pressure instruments, refer to Section 5.7.

Liquid level can be measured (inferred) by measuring a differential pressure (d/p) caused by the weight of the fluid column in a vessel balanced against a reference. For vessels at atmospheric pressure, the high side of the instrument is connected to the bottom of the vessel, and the low side (reference) is vented to the atmosphere. This method of level measurement is often referred to as *hydrostatic tank gauging*

© 2003 by Béla Lipták

(HTG), especially in the bulk liquid industries. For pressurized vessels, the reference side must also be connected to the vessel so that both sides of the instrument equally sense the static pressure changes within the vessel and their differential responds only to the d/p caused by fluid head. The reference can be a column of fluid of fixed height such as a liquid-filled reference leg outside the tank or, as in the case of a bubbler system, a gas-filled reference leg, usually inside the tank. The key requirement is that the reference leg provide (or represent) a constant, known, hydrostatic head. An increase in the tank level from empty (0% level) to full (100% level) can result in a readout of 0 to 100% d/p (direct acting) or in a readout of 100 to 0% d/p (reverse acting). To obtain an accurate measurement using d/p cells, the densities of the process liquid and of the reference leg must be known and either be constant or continuously considered.

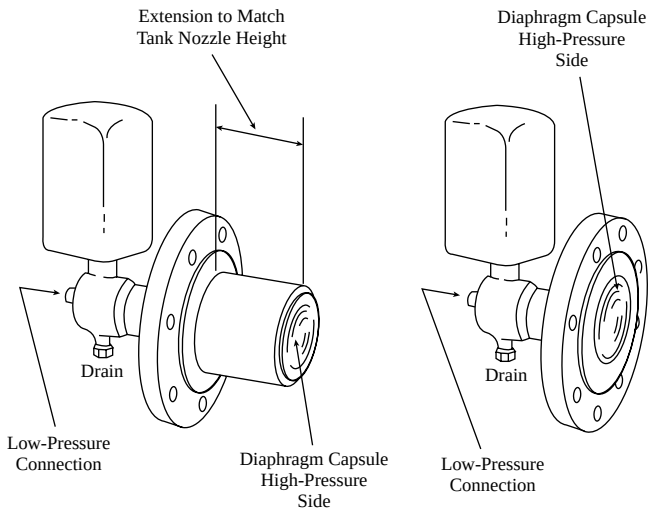

FIG. 3.6a
Extended diaphragm d/p cell (left); flat diaphragm d/p cell.

SENSING DIFFERENTIAL PRESSURE

Differential pressure can be detected by sensing two pressures separately and taking the difference to obtain liquid level. In practice, however, it is generally desirable to use a single pressure-difference sensor so that the static pressure levels are balanced before any measurement errors are introduced. The importance of this consideration can be visualized, for example, on a 0- to 100-in. (0- to 2.5-m) water column (WC) measurement where the expected accuracy is ±0.5 in. (±13 mm) WC. It would be virtually impossible to approach this accuracy if the measurements were made at a static pressure of 1000 PSIG (7 MPa) using two independent sensors. Since 1000 PSI (7 MPa) is equivalent to about 28,000 in. (714,000 mm) WC, the required accuracy of each measurement would be ±0.25 in./28,000 in., or 0.0009% (7 mm/714,000 mm). Nevertheless, several highly accurate HTGs do use two or more transmitters for gauging tanks at atmospheric pressures (Figure 3.6e). For instance, a third transmitter located a fixed distance above the bottom transmitter can be used to sense, in real time, the difference in pressure caused by the density of the fluid. Its sensing line to the tank must always be submerged and full to ensure accurate readings. However, when the tank is being initially filled or completely emptied, a temperature measurement in the fluid may be used to calculate an estimate of density or to help extrapolate from earlier density measurement records.

Extended Diaphragms

The d/p cell can be modified for use on viscous, slurry, or other plugging applications. Figure 3.6a shows two such designs: the extended and the flat diaphragm d/p cell transmitters. Their principles of operation are the same as those of the conventional d/p cells, except that the high-pressure side of the diaphragm capsule is exposed and extended to be in direct contact with the process. The extended diaphragm version is designed to bolt directly to the vessel nozzle; the protrusion can be sized to fill the space in the nozzle, placing the diaphragm flush with or slightly inside of the vessel wall. This design completely eliminates dead-ended cavities and is used especially on materials that can freeze at high temperatures or that can deteriorate or discolor if pocketed. This design cannot be serviced without depressurizing and draining the vessel.

The flat diaphragm design is normally installed by bolting it directly to a block valve on the vessel nozzle. A full-size gate or ball valve can allow for service without draining or depressurizing the tank. Because the connection is large, typically 3 in. (76 mm), the process is less apt to bridge or plug the sensing connection. Flat diaphragm cells can also be furnished with a solvent flush or steam-out connection. Both the flat and the extended designs are available with ranges up to 850 in. (2160 mm) with an accuracy of ±0.5% of span. The flat units can withstand 550 PSIG (3.8 MPa) operating pressures when the process is at 350°F (175°C). The maximum process temperature rating for the extended design is 750°F (400°C). Changes in process or ambient temperatures can cause zero shifts, as is the case with many similarly designed instruments. To minimize this effect, the d/p cell should be zeroed at the normal operating temperature, and the exposed body of the transmitter should be insulated. Alternatively, temperature at the connection or within the transmitter may be measured and continuously accounted for in the computation of level.

Some suppliers offer the extended and flat diaphragms with Teflon®, Viton®, or other plastic coating. This coating is intended as a slippery surface to minimize material buildup on the diaphragm. Do not rely on the plastic coatings for corrosion protection unless the supplier states specifically that the coating is so designed. As a general rule, engineers should not rely on coatings for corrosion protection of wetted parts of most process instruments, because, if the coating is nicked during installation, that protection is destroyed.

© 2003 by Béla Lipták

Chemical Seals

Transmitters may also be provided with liquid-filled extension elements (chemical seals). The units shown in Figure 3.6a are used on atmospheric tanks or on pressurized tanks if the low-side connection can be kept clean or sealed. The designs shown in Figures 3.6b and 3.6c are used on pressurized vessels where plugging or corrosion can occur on both the high- and the low-pressure sides. The chemical seal designs are available in a broad range of materials including such metals as tantalum and zirconium. Vessel connection considerations apply to both the high and the low side. As can be seen from Figure 3.6c, the process material contacts both the diaphragm and the process side of the flange.

The instrument side of the diaphragm is filled with an oil or other suitable fluid (sometimes including water) and is connected by capillary to the high and low sides of the d/p cell. The differential pressure capabilities of these systems depend on the d/p cell selected. The accuracy of the system will always be worse than the accuracy of the d/p cell itself.

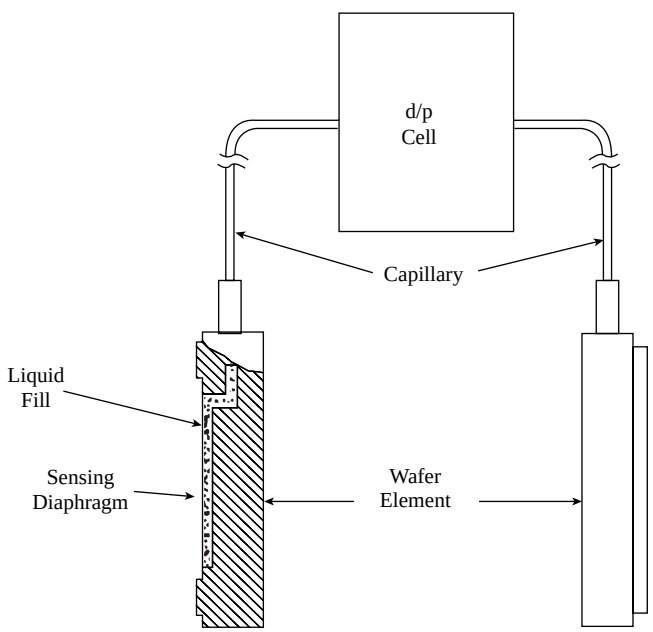

FIG. 3.6b
d/p cell with wafer elements.

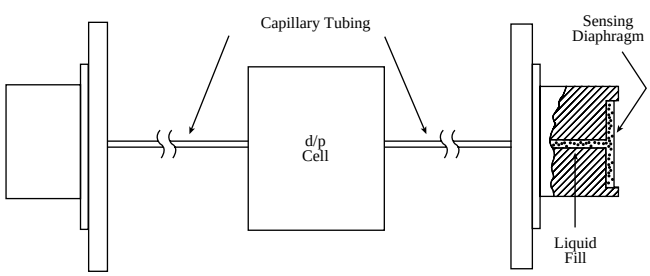

FIG. 3.6c
d/p cell with extended chemical seal elements.

The spring constant of the diaphragms at the chemical seals and the elasticity of the fill fluid will introduce some error, not all of which can be fully compensated. This error becomes more pronounced at very small differential pressure ranges and at high static pressures. A larger and less predictable error can result from the temperature-sensitive nature of the seal and capillary system. Temperature differences between the low and high sides will cause differing amounts of thermal expansion; this will be sensed by the d/p cell as a differential pressure and interpreted as a level change. Because the unequal amounts of expansion can be caused by the process temperatures or by changes in the ambient conditions, it is not always possible to zero-out this error.

The pressure and temperature ratings for these filled systems depend on seal design and filling liquid. Seals are readily available that are rated to 1500 PSIG (10 MPa). The fill material is normally a silicone oil that is good to 450°F (232°C). Other fill materials raise temperature ratings to 1200°F (650°C), allowing chemical seal designs to be considered for high-temperature applications. The volume of fluid in the seal, capillary, and d/p cell housing may be significant. Process, environmental, or health sensitivity to accidental leakage of the fill fluid may restrict choices. Distilled water has been successfully used as a fill fluid in some cases.

INTELLIGENT D/P CELLS AND TANK EXPERT SYSTEMS

The microprocessor has extended the applications of electronic differential-pressure transmitters. The detection is still accomplished by use of the elastic element (diaphragm or bellows), although the actual elastic element may be very small. The elastic element may actually have some of the electronic and microprocessor circuits attached to, embedded in, or otherwise incorporated directly. The microprocessor can convert the analog readings of deflection to a linearized, high-resolution digital signal compensated for temperature effects. Transmitter stability is thus improved, and the time between physical calibrations is often extended to more than a year.

"Smart" level transmitters can convert the level readings of spherical or cylindrical tanks into actual volume percentage readings (Figure 3.6d). Intelligent transmitters have also been

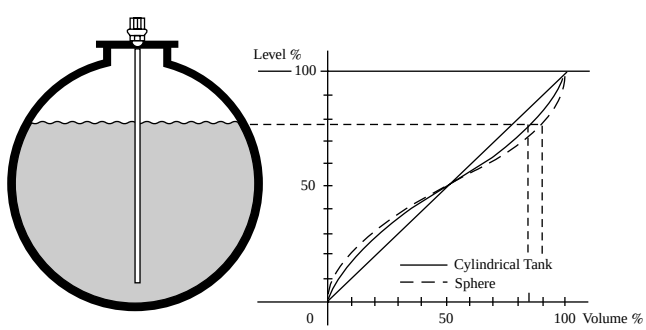

FIG. 3.6d
Intelligent transmitters can automatically convert level readings into volume.

© 2003 by Béla Lipták

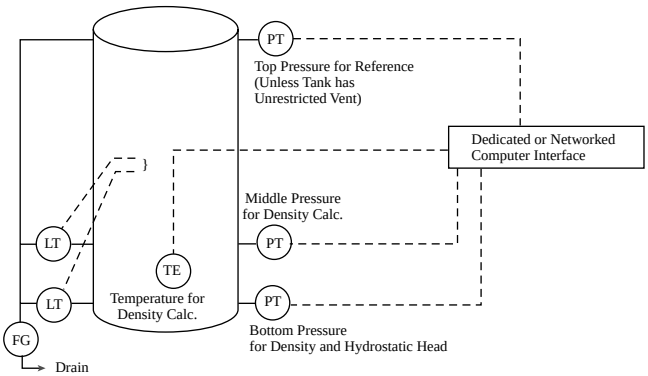

FIG. 3.6e
Multiple transmitters to provide level, mass, volume, and density data.

combined into tank expert packages that, in addition to level, can also calculate mass, density, and volume based on the measurements from three or more d/p cells and one temperature transmitter as shown in Figure 3.6e. Outputs are available through digital RS485 and RS232 connections and may be networked digitally for multiple remote access to the data. Most manufacturers offer optional digital communication with the transmitter through the output signal wires coincident with the analog output signal. Wireless Ethernet local area networking per IEEE-802b and other wireless technologies is also available. Calibration, range and zero setting, elevation, suppression, and linearization may all be accomplished remotely, although periodic physical calibration to a known NIST traceable standard is still recommended for the most accurate results.

In Figure 3.6e, the "TOP" pressure transmitter can be eliminated if the tank is completely vented without any possible vent restrictions. Simple problems, such as a bird's nest in a vent pipe, may cause unexpected and possibly undetected errors. This is a particular concern under transient conditions where the restricted vent does not allow enough flow to keep up with filling or draining operations. If the top transmitter is eliminated, it may be prudent to install a very low-pressure detector to alert operators of unexpected pressure or vacuum conditions. A better solution would be to use differential-pressure level transmitters (LTs) for the middle and bottom locations as shown on the left in Figure 3.6e. In this case, they should share a common dry reference leg.

The bottom and middle transmitters, whether pressure or differential pressure, must be placed a known vertical distance apart. Because horizontal distance does not matter, on large tanks, it would facilitate maintenance if each were placed within reach of stairways, ladders, or platforms existing at the appropriate levels. Density is determined by the difference in readings between the middle and bottom transmitters. For instance, if the transmitters were placed 50 in. (125 mm) apart, and if the tank contains distilled water at 68°F (20°C), the bottom transmitter should read exactly 50 in. (125 mm) of water more than the middle transmitter. If the tank contained an oil with a specific gravity of 0.75, then the difference in readings would be 37.5 in. (93.75 mm) of water. Anything that changes the density, including bulk temperature changes and chemical composition changes, will be reflected in the difference in readings between the middle and bottom transmitters. Thus, the density can always be calculated.

A temperature reading may be useful as a diverse measurement to verifying expected density or to assist in estimating or extrapolating density as the tank is initially filled or as it is emptied below the middle transmitter.

PRESSURE REPEATERS

When detecting the level in pressurized vessels, the vapor space pressure must be connected to the low side of the d/p cell to serve as a reference. On hard-to-handle materials, a one-to-one pressure repeater may be used to provide this reference and simultaneously isolate the d/p cell from the process. Repeaters develop an air output pressure equal to the vapor-space pressure. They are inexpensive, but their accuracy is limited. The error in the repeated output pressure increases as the repeated pressure rises. At a pressure level of 40 PSIG (0.27 MPa), the error is 2 in. (51 mm) H_2O; at a pressure level of 400 PSIG (2.7 MPa), the error is 20 in. (508 mm) H_2O. Obviously, errors of this magnitude are not acceptable for most process level measurements. Repeaters have generally fallen into disuse in favor of high-accuracy digital transmitters made from the same materials.

DRY, MOTION BALANCE DEVICES

These differential pressure detectors are also referred to as *bellows meters*, because they depend on liquid-filled, double-opposed bellows. Bellows meters are most useful where local indication or recording is required and where compressed air and electric power are not available as energy sources. They can be very sensitive to low differential pressures because of the large area and slack resistance to motion that can be built in.

Figure 3.6f illustrates the high- and low-pressure chambers, the range spring, and the drive assembly (a bell crank of sorts) to transfer bellows motion to the readout pointer. The bellows in both chambers and the passage between them are liquid filled. When the unit is installed, the pressure in the high-pressure chamber compresses the bellows so that the liquid flows from it into the low-side bellows. When the low-pressure (or range) bellows expands, it exerts a force against the range spring, which determines the span of the instrument. The linear motion of the range bellows moves the drive lever, mechanically transmitting a rotary motion through the sealed torque tube assembly to the indicator. The output motion from the torque tube assembly is limited to a few degrees of angular rotation. This is sufficient for most

© 2003 by Béla Lipták

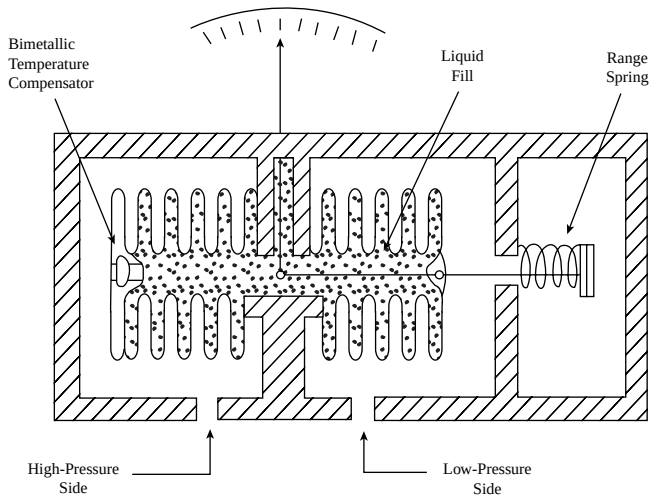

FIG. 3.6f
Motion detector d/p indicator.

mechanically driven local indicators or recorders and well within the capabilities of modern electronic motion sensors.

If the secondary device imposes a considerable load on the torque tube assembly, however, the accuracy and sensitivity of the unit can be destroyed. For sustained accuracy, bellows meters depend on the repeatability of their mechanical systems, which have proven to be linear within 0.5% to 1% of full range, and down to 0.2% or less when the range can be limited to a small portion of the total available motion. A temperature compensator built into the bellows assembly compensates for the changing volume of the fill liquid resulting from ambient temperature variations. Bellows meters are provided with overrange protection. The operation of one of the protection mechanisms is as follows: The bellows move in proportion to the differential pressure applied across them and in proportion to the spring rate of the bellows plus the resisting springs. When the bellows have moved over their calibrated travel, a valve mounted on the center stem seals against its seat, thereby trapping the fill liquid in the bellows. Because the liquid is essentially incompressible, the bellows are fully supported and will not rupture, regardless of the pressure applied. This overrange protection is furnished in both directions, protecting both bellows. Another design of overrange protectors involves the use of liquid-filled bellows with a number of diaphragm discs and spacer rings between them. As the bellows are subjected to overrange pressures, the diaphragms nest, and the metallic spacer rings form a solid stop, thereby fully protecting the bellows from rupture.

Bellows meters can detect full-range pressure differentials at least as low as 20 in. (508 mm) WC and as high as 400 PSIG (2.7 MPa). Measurement of low differentials is limited by the small forces available to actuate the motion detector mechanism. For very high differentials, the limitation is the mechanical strength of the bellows. Standard units are available with steel or stainless-steel housings and stainless-steel or beryllium copper bellows. For corrosive applications, other materials can be obtained or special, high-displacement-volume chemical seals can be used. Static pressure ratings up to 10,000 PSIG (69 MPa) are available as standard; operating temperature is limited to 200°F (93°C).

LIQUID MANOMETERS

These instruments are discussed in detail in Section 5.9. Their design variations include the U-tube, the well, and the float-type manometers. The float designs can provide remote readouts, whereas regular manometers can serve as the readout indicators for bubbler-type level sensors. Where the use of glass is not allowed, digital manometers using magnetic coupling between a float inside a stainless-steel U-tube manometer, and an outside electronic transmitting mechanism can be used.

Glass-tube manometers are available with ranges up to 120 in. (3.05 m), which is sufficient for many level applications. The magnetically coupled float manometers are available for high-pressure services, up to 6000 PSIG (41 MPa), and can measure up to 1000 in. (25 m) of water column.

Because of the fragile nature of glass, the toxicity of mercury, and the chemical interaction between the manometer filling fluids and the process, manometers are not widely used on process level measurement applications and are mostly restricted in their use to occasional utility services.

LEVEL APPLICATIONS OF D/P CELLS

The applications of pressure differential detectors as components in level-measurement loops will be covered in the following paragraphs. The requirements of atmospheric and pressurized tanks and the features of level loops on clean and hard-to-handle process fluids will be discussed separately. Figure 3.6g shows the symbols used for the

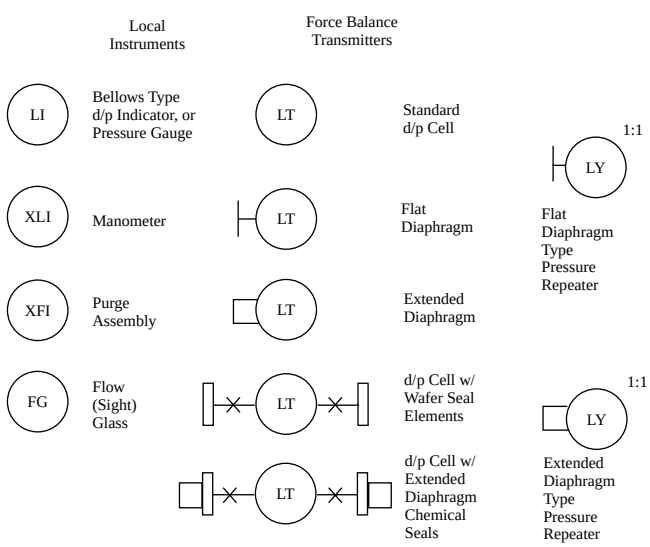

FIG. 3.6g
Symbols for d/p level loops.

© 2003 by Béla Lipták

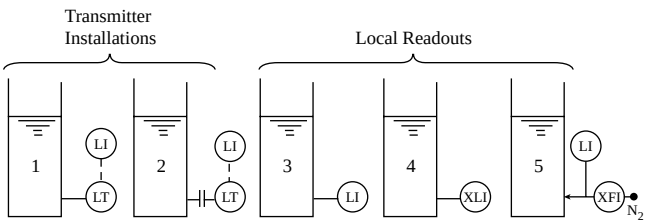

FIG. 3.6h
Detection of clean liquid levels in atmospheric tanks by d/p instruments.

various loop components. In the discussion that follows, the air-bubbler-type d/p cell installations will not be included, as these are covered in Section 3.2.

Clean Liquids in Atmospheric Tanks

Unpressurized vessels containing clean liquids are the least demanding as far as level measurement is concerned, because the two most common sources of difficulties (vapor pressure compensation and plugging) are not present. Figure 3.6h shows five tanks equipped with five different types of level devices. The first two are for remote readout, and the others are for local readout. On tank 1, a standard d/p transmitter with screwed connections is shown with its low-pressure side open to the atmosphere. This installation can be made by using a pressure transmitter instead of a d/p transmitter. The pneumatic receiver gauge is normally calibrated for 0 to 100% level. The flat diaphragm-type d/p transmitter is shown on tank 2. Compared to the standard d/p cell, the flat diaphragm-type transmitter is simpler to install, and it is nozzle mounted, requiring no other means of support. It also can be less expensive, because only the diaphragm and the retaining ring are in contact with the process. As a result, only these parts must be made of corrosion-resistant materials whereas, in the standard d/p cell, the entire body is exposed to the process fluids. A flat diaphragm-type pressure repeater can also be used in place of the d/p transmitter, in which case the receiver gauge will sense the actual hydraulic head instead of a 3 to 15 PSIG (21 to 103 kPa) transmitted signal. Tank 3 shows a motion balance local d/p indicator with the low-pressure side vented to atmosphere. The same measurement can be made by using a standard pressure gauge. The level in tank 4 is detected by a manometer. Although this is one of the most accurate and economical devices to use for local readout, the consequences of mechanical damage and proper selection of the filling liquid must be considered. The installation on tank 5 is basically an air bubbler system, which is detailed in Section 3.2. Not shown is a system (usually portable) wherein a miniaturized electronic transmitter is actually lowered, by a cable containing its wiring, into an atmospheric tank and down through the liquid until it reaches the bottom. The operator can tell that it is on the bottom when the level indication stops increasing. This is particularly useful for occasional tank gauging and for measuring the level in wells.

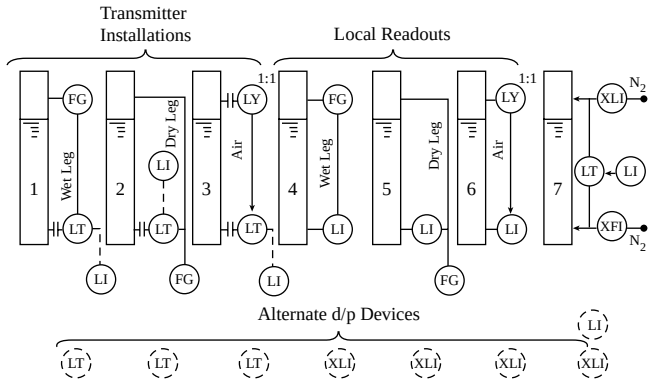

FIG. 3.6i
Measurement of clean liquid levels in pressurized tanks by d/p instruments.

Clean Liquids in Pressurized Tanks

When the level in a pressurized vessel is to be established by hydraulic head measurement, the instrument has to be compensated for the vapor pressure in the tank. This is done by exposing the low-pressure side of the d/p cell to these vapor pressures. Compensation can be achieved by various means. Figure 3.6i shows seven variations of this installation. Tank 1 illustrates a wet-leg application in which the compensating leg is prefilled with a chemically inert liquid that will not freeze or vaporize under operating temperature conditions. The wet-leg installations are used when the process vapors would otherwise condense into the compensating leg, thereby exposing the low-pressure side of the d/p cell to unpredictable hydraulic heads, or when the transmitter must be sealed from corrosive vapors. The prefilled wet leg creates a constant pressure on the low-pressure side of the transmitter. The leg is filled through a seal pot to provide excess capacity.

It is desirable to make this seal pot out of a sight flow indicator so that the level of the filling liquid is visible to the operator. The d/p cell can be either the standard or the flat diaphragm design. On tank 2, the same d/p transmitter is installed in a dry-leg system. This is acceptable when the process vapors are not corrosive and condensation at ambient temperatures is not expected. For such applications, a condensate pot is installed below the d/p cell, and it also should incorporate a sight flow indicator so that the operator can visually determine if it is time to drain out any accumulation of condensate. Tank 3 illustrates the use of a flat diaphragm pressure repeater for vapor pressure compensation. The problems associated with range depressor adjustments, corrosion, and condensate accumulation are eliminated by the use of repeaters, but they do add to the total error of the installation. On tanks 4, 5, and 6, the same basic installations (wet-leg, dry-leg, and repeater) are shown in connection with local bellows indicators. Manometers can also be considered in place of the motion balance d/p indicators if mechanical damage, chemical inertness of the filling fluid, and its compatibility with the operating temperatures are previously established. One concern with

© 2003 by Béla Lipták

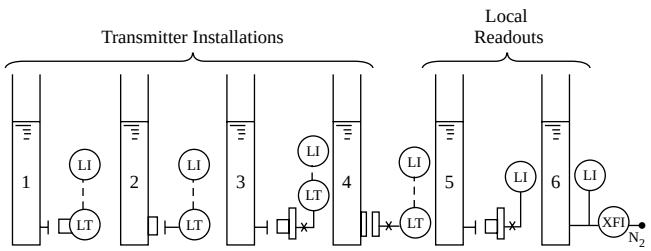

FIG. 3.6j
Sensing of hard-to-handle liquid levels in atmospheric tanks by d/p devices.

the dry-leg installation shown in tank 5 is the possibility that, if the vapors in the tank condense, or if the tank is flooded, process liquids will fill the dry leg. This is unsafe because, under these conditions, the d/p cell will signal a low level or an empty tank condition. The installation of a float trap can lower (but not eliminate) this risk by draining the dry leg if the liquid buildup is slow. Tank 7 illustrates a bubbler system with either transmitting or local indicating d/p devices. The advantages, limitations, and drawbacks of such installations have been pointed out in Section 3.2.

Hard-to-Handle Fluids in Atmospheric Tanks

Level measurement is more difficult when the process fluid is highly viscous, is likely to freeze, contains solids that can settle out, or can gel or polymerize in dead-ended cavities. Figure 3.6j shows six installations that may be considered for these conditions. On tank 1, an extended diaphragm-type force balance transmitter is shown. The diaphragm motion is limited to a few thousandths of an inch, and the nozzle cavity is completely filled by the diaphragm extension. The extended diaphragm transmitter is a good candidate for level measurement of hard-to-handle liquids, provided that the vessel can be drained when the transmitter needs service. Tank 2 is provided with a flat diaphragm transmitter mounted on a pad. The nozzle cavity is reduced but not eliminated. Tank 3 is furnished with liquid-filled chemical seals such as the one shown in Figure 3.6c. This unit will perform as well as the extended diaphragm d/p cell but, because of the liquid-filled capillary system, it is subject to errors caused by temperature variations. A wafer-type, liquid-filled element such as the one illustrated in Figure 3.6b is shown on tank 4. This sensing method combines the disadvantages of 2 and 3; the dead-ended cavity is not eliminated, and it is subject to temperature errors. However, it can be used on extremely hot processes. On tank 5, the element is the same extended chemical seal as on tank 3, but the readout is a local pressure gauge. An air bubbler is shown on tank 6.

Hard-to-Handle Fluids in Pressurized Tanks

When the process material in the vessel is hard to handle, it is frequently the case that the vapor space also contains materials such as foam that can build up and plug the sensing

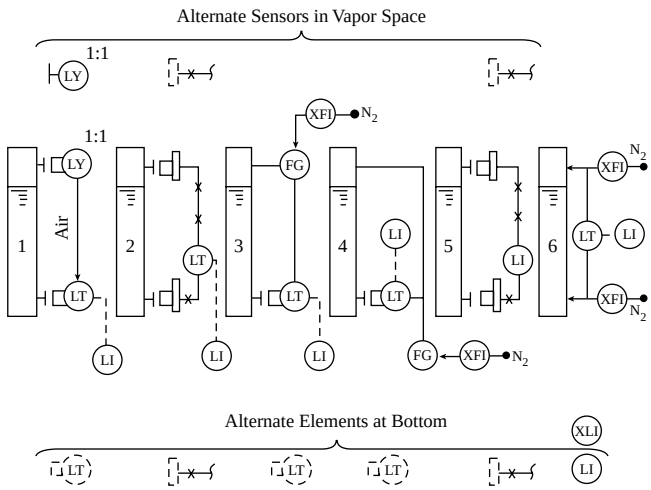

FIG. 3.6k
Detection of hard-to-handle liquid levels in pressurized tanks by d/p instruments.

line of the compensating leg. Figure 3.6k shows six methods for dealing with these applications. Tank 1 shows an extended d/p transmitter in the liquid region and an extended repeater in the vapor space. The use of these devices eliminates all possible plugging problems, because the sensing diaphragms are flush with the inside of the vessel wall. This detecting system will function properly on all except the most difficult crystallizer applications, where the inside wall of the tank might be coated with a layer of crystals.

The extended chemical seals shown on tank 2 will provide an installation similar to that on tank 1 and will perform similarly if temperature differences between the wafers or ambient temperature variations do not cause inaccuracies. Tanks 3 and 4 are equipped with extended d/p transmitters, but a purge flow prevents the process vapors from entering the compensating legs. The purge medium can be either liquid or gas and can be applied to both dry- and wet-leg installations. Such systems require additional maintenance and range depressor adjustments, and corrosion or condensate accumulation can cause calibration or reliability problems. Tank 5 shows a local indicator equipped with extended chemical seals. This device is subject to temperature effects and requires large displacement seals to match the displacement of the d/p indicator. For tanks 1 through 5, flat diaphragm elements can also be considered, but it should be realized that they do not completely eliminate the dead-ended nozzle cavities in which material can accumulate. Such designs should be considered only where it is essential to have an isolating valve between the tank and the level device so that it will not have to be drained prior to removal of the instrument. The bubbler system is illustrated on tank 6; either liquids or gases can be used as the purge media.

The extended diaphragm transmitter/repeater installation is attractive for pressure vessels containing hard-to-handle materials if isolation valves are not required. Purged installations are also acceptable if the availability of a purge media

© 2003 by Béla Lipták

and maintenance are both reliable and if the process can tolerate accumulation of the purge flow.

SPECIAL INSTALLATIONS

One variation that can be considered is to install the d/p cell in a "reverse" arrangement wherein the high-pressure side is connected to the wet leg. Naturally, this can be done only with nonextended units such as the ones used on tanks 1 and 4 in Figure 3.6i. If this is done, these transmitters will detect the maximum d/p when the tank is empty and the minimum d/p when it is full.

On hard-to-handle processes where extended diaphragms are used, a "reverse-acting" d/p cell can be used when one or both sides are protected by chemical seals (such as in tanks 2 and 5 in Figure 3.6k) and the d/p is located near the bottom of the tank. In these cases, the high-pressure side of the d/p cell can be connected to the chemical seal element at the top of the tank. In that case, the maximum reading of the d/p cell occurs when the tank is empty.

Boiling Applications

Reverse-acting differential pressure level transmitters can be used on boiler or steam drum level applications (Figure 3.6l) where the wet leg is the high-pressure side of the process. When the process fluid condenses into a liquid at ambient temperatures, a wet-leg configuration can be obtained by allowing the condensate to accumulate in the wet leg rather than mechanically filling the wet leg with a slow drip. This can be achieved by installing an uninsulated condensate pot that remains at ambient temperature. Excess condensation from this pot drains back into the tank and therefore maintains a constant height of the reference wet leg.

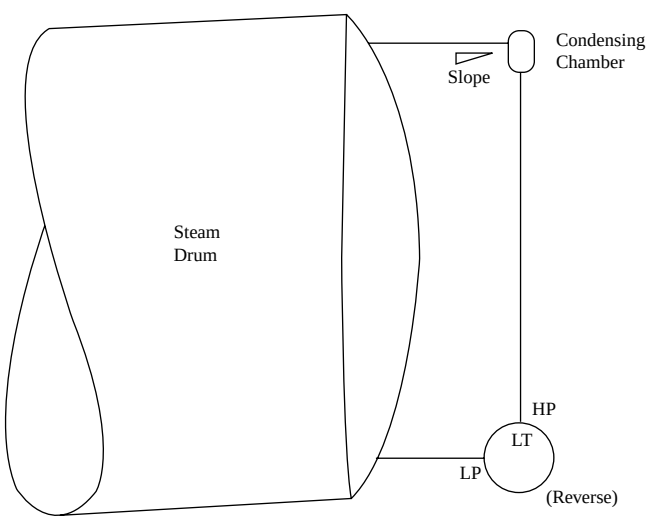

FIG. 3.6l
Level measurement in steam drums or on other boiling liquid applications.

One should understand that the output signal of such a d/p cell relates *not to the level inside the steam drum* but to the mass of water inside. If the condensate in the wet leg is cold, the wet-leg density will be substantially greater than that of the boiling fluid inside the drum. In addition, the density inside the drum will be a variable; density will drop as a result of the swelling effect when the steaming rate rises, and it will rise when the steaming rate drops. A level control system that adds colder feedwater to a steaming drum may result in bubble collapse such that the actual level decreases even further. The exact position of the *top surface* of the boiling fluid may never be determined. A large *void fraction* will result in a higher surface position without necessarily changing the differential pressure. A "full" tank or drum will not produce zero differential pressure under those conditions. Therefore, the d/p cell output can be converted into a true level reading only if the density and void fraction of the boiling fluid are separately accounted for using other available parameters, such as steaming rate, bulk fluid temperature, and/or discharge pressure (equivalent to temperature for saturated conditions). These are *very* important considerations when determining safety system setpoints. The shrinkage that may be caused by cold feedwater or a sudden reduction in steaming rate must be accounted for to avoid uncovering hot tubes. The swell that may be caused by an increasing demand transient must be accounted for to avoid liquid carryover. Nevertheless, differential pressure remains a popular method of measuring and controlling level in boiling vessels. Many safe and effective installations exist throughout industry, including many on nuclear and fossil-fueled boilers and steam generators in the power industry.

Cryogenic Applications

A similar situation exists when the process liquid is very cold, except that major bulk boiling rarely takes place within the vessel itself. The tank may be located inside high-thermal insulation, called a *cold box*. More often, it is located in a double-walled high-vacuum dewar tank (Figure 3.6m). These applications also involve boiling, but here the liquid nitrogen or other liquefied gas will, by design, boil primarily in external piping or heat exchangers. For sensing lines, this increase in temperature occurs as the liquid-filled pipe is approaching the wall of the cold box or nears the penetration point of the dewar. At some point in the sensing line, the liquid boils, causing a liquid–gas interface. From that point on, the sensing line is filled with vapor. To provide a stable and noise-free level signal, the installation should be such that the boiling will occur at a stable, well-defined point in the sensing line. Boiling should occur in a large-diameter, low-slope section of the sensing line as it approaches the penetration of the vessel outer wall. The line diameter should be large (1 in. or 25 mm), because the interface between the liquid and vapor can be turbulent during consumption transients. This low-slope section should approach the wall of the cold area so that the temperature will be high enough to guarantee

© 2003 by Béla Lipták

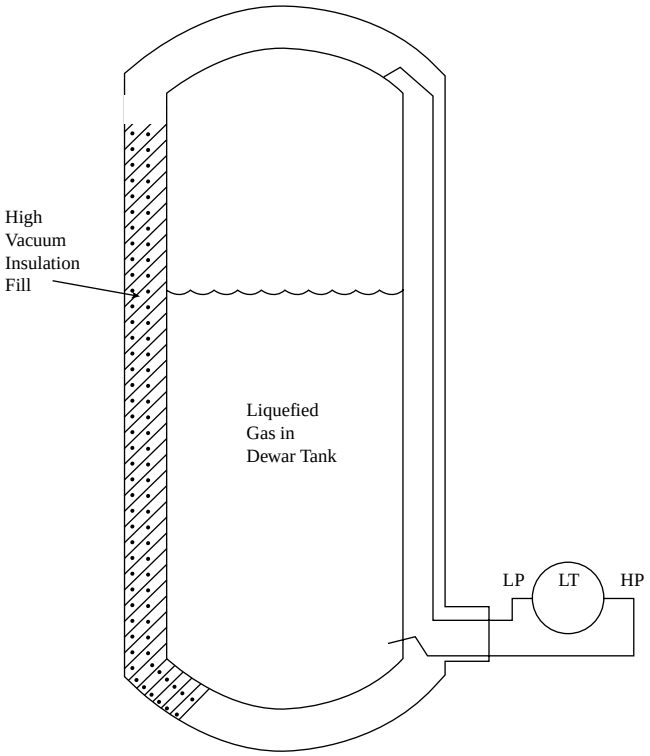

FIG. 3.6m
Cryogenic level measurement in vacuum-insulated tank.

that the process liquid is in the vapor form under all process and ambient conditions. To account for transient conditions that may temporarily move the interface point, a "dry" loop is often provided in the warmer portion of the sensing line so as to catch and quickly evaporate any temporary liquid carryover.

For most cryogenic level measurements, the density of gas in vertical sections of the sensing lines can safely be ignored. However, for argon (a very heavy gas), the effect should at least be calculated at limiting conditions to ensure that the weight will not exceed the desired accuracy of the measurement.

Normal Ambient Temperature Bi-phase Applications

Differential pressure may also be used for level measurement on large tanks containing gases such as refrigerants or propane under pressure, where a liquid–gas interface exists at normal ambient temperature. In these cases, a dry reference leg is suggested. A few watts of heat tracing along the dry reference leg will ensure that it remains a degree or two above ambient temperature (thus slightly superheated above saturation temperature) to avoid condensation of the gas. Care must be taken during fast filling operations to ensure that major condensation does not collect temporarily in the reference leg as a result of increasing pressure in the tank. Provision of a drip leg with a sight glass at the bottom of the reference leg is suggested.

TABLE 3.6n
D/P Cell Capsule Capabilities

	Low Range	*Medium Range*	*High Range*
Minimum span - in. H_2O	0–2	0–25	0–30 PSID
- kPa	0–0.5	0–6.2	0–210
Maximum span - in. H_2O	0–150	0–1000	0–3000 PSID
- kPa	0–37.5	0–250	0–207 bars
Maximum zero suppression	(maximum span) minus (calibrated span)		
Maximum zero elevation	Minimum span		

SPAN, ELEVATION, AND DEPRESSION

All d/p cells can be provided with zero, span, elevation, and depression adjustments, either mechanical or electronic. Table 3.6n shows some typical d/p cell ranges and the available elevation and suppression setting adjustments for each. Whenever the d/p is at an elevation other than the connecting nozzle on an atmospheric tank, the zero of the d/p cell needs to be elevated or depressed. It is important to realize that two zero reference points exist. One is the level in the tank that is considered to be zero (lower range value) when the tank is near empty. The other zero reference point is the point at which the d/p cell experiences a zero differential (zero value of the measured variable). The terms *elevation* and *depression* as used in this discussion refer to the zero experienced by the d/p cell (Figure 3.6o). This figure uses mechanical spring adjustments to physically illustrate the relationships. Equivalent electronic adjustments are available. In both cases, the overall available span must be wide enough to encompass the required adjustments. The tension in the elevation spring can be set to cancel out any initial pressure exerted on the high side of the diaphragm capsule. Similarly, the depression spring can be adjusted to compensate for initial forces on the low-pressure side of the d/p cell. The amount of depression setting is limited to the full range of the capsule, whereas the sum of elevation setting and span cannot exceed the full range of the cell. These settings are normally adjusted in the factory if sufficient data are furnished to the manufacturers. If the setting is changed in the field, it will affect the span of the transmitter.

Figure 3.6p shows a dry-leg d/p cell installation with the desired minimum and maximum liquid levels noted. The output of the transmitter will be zero when the level is at the minimum and 100% when it is at the predetermined maximum. The span (range) of the cell will be product of liquid density and the distance between minimum and maximum levels desired (X). The elevation spring will be set for the product of density times distance between the minimum level desired and the cell datum (Y). A reference leg is also shown on this sketch, which is convenient for checking the transmitter. Checking is done by temporarily isolating the cell from the tank and filling the reference leg with a known

© 2003 by Béla Lipták

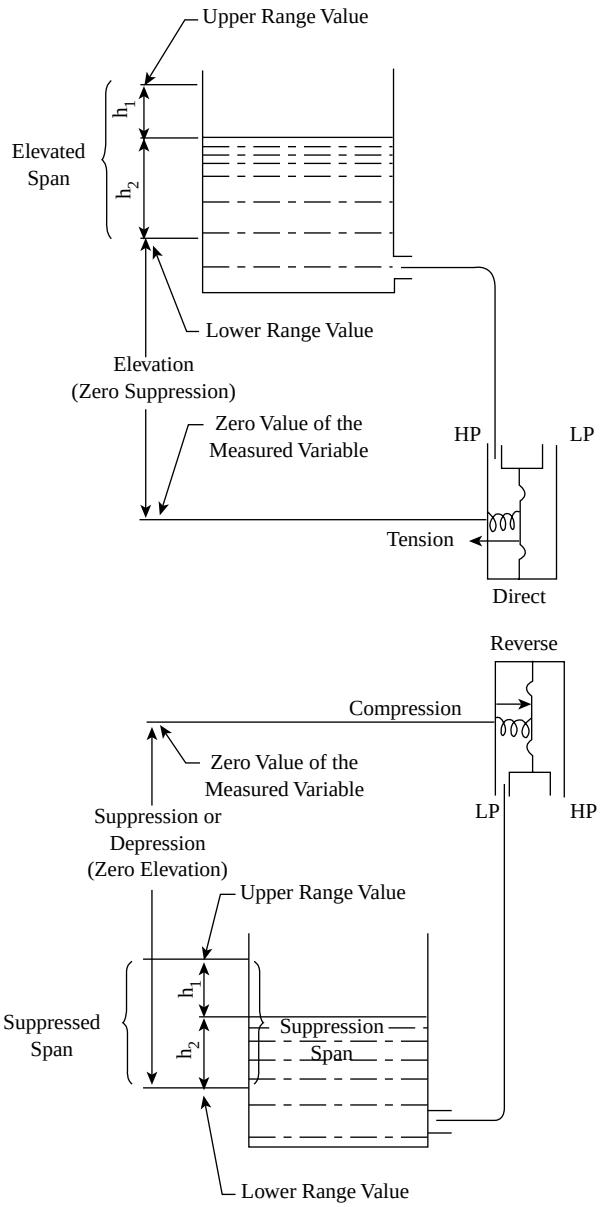

FIG. 3.6o
Illustration of elevation and depression in connection with d/p-type level measurement on atmospheric tanks.

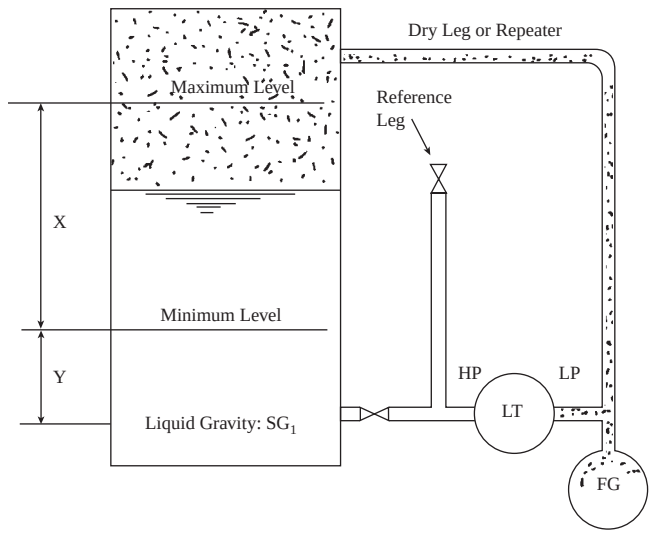

FIG. 3.6p
Illustration for range elevation; span = X(SG1) and elevation = Y(SG1).

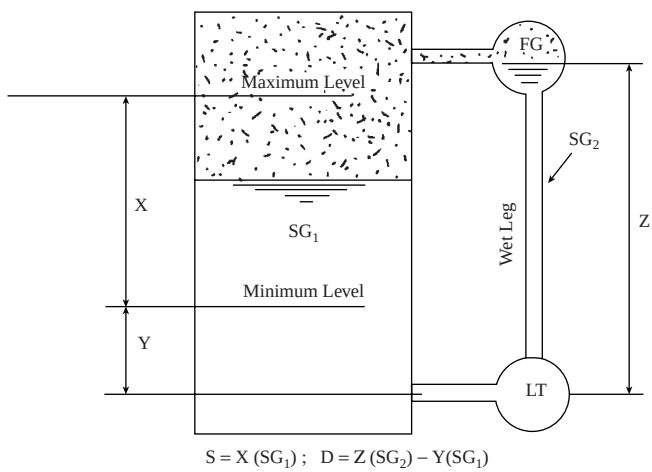

FIG. 3.6q
Illustration for range depression.

gravity fluid. Once this figure is obtained, the repeatability of the unit can be checked periodically.

Figure 3.6q shows a wet-leg installation. Span is determined the same way as before ($X \times SG_1$). Range depression is calculated as the difference between the hydraulic head in the wet leg (ZSG_2) and the range elevation (YSG_1) desired. The difference between process and filling fluid densities must be selected such that the depression does not exceed the limit given in Table 3.6n. For example, if the desired minimum level is at the cell datum line ($Y = 0$), the difference between maximum and calibrated span is 200 in. (5 m) of water column, and the height of the wet leg is 100 in. (2.5 m), then the density of the filling liquid cannot be more than 2. The actual span setting of the cell can be anywhere below the full range.

INTERFACE DETECTION

Figure 3.6r shows the settings for a liquid–liquid interface application. The span for this cell is the product of the density difference of the two liquids ($SG_2 - SG_1$) and the distance between the maximum and minimum interface levels (X). The range depression is the difference between the hydraulic head of the filling fluid ($Z \times SG_3$) and the sum of the range elevation ($Y \times SG_2$) plus the light liquid head over the range of minimum interface to overflow level ($[X + V] \times SG_1$). No depression is required if the minimum interface is at the cell datum, the height of the wet leg is the same as the maximum total level, and the filling fluid density (SG_3) is the same as the light liquid (SG_1). If the minimum interface is at the cell datum and a dry-leg system is used, then, instead of depression, the cell must

© 2003 by Béla Lipták

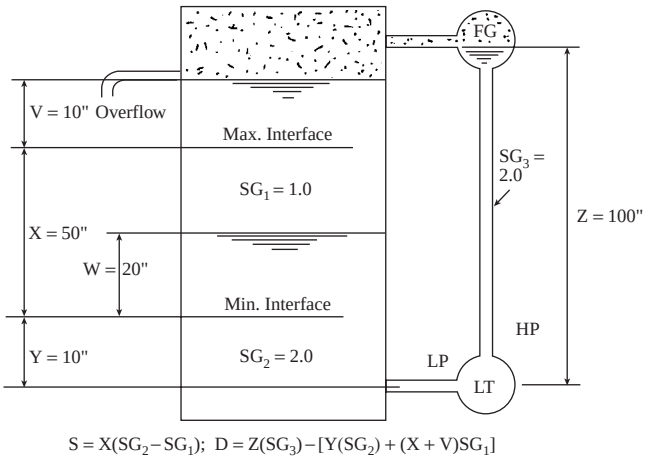

FIG. 3.6r
Span and depression settings for interface detection.

be elevated by the hydraulic head of the light liquid over the range of cell datum to overflow level ($X + V \times SG_1$).

The following calculations, which are based on the data shown in Figure 3.6r, will serve as examples.

$$\text{Wet leg hydraulic head} = Z(SG_3) = 200 \text{ in. } H_2O \quad \textbf{3.6(1)}$$

$$\text{Process side hydraulic head at minimum interface} = (V + X)SG_1 + Y(SG_2) = 80 \text{ in. } H_2O \quad \textbf{3.6(2)}$$

$$\text{Process side hydraulic head at maximum interface} = V(SG_1) + (X + Y)SG_2 = 130 \text{ in. } H_2O \quad \textbf{3.6(3)}$$

$$\text{Transmitter span} = X(SG_1 - SG_2) = 50 \text{ in. } H_2O \quad \textbf{3.6(4)}$$

$$\text{Range depression} = Z(SG_3) - [Y(SG_2) + (X + V)SG_1] = 120 \text{ in. } H_2O \quad \textbf{3.6(5)}$$

To determine the correct output signal from the transmitter at any known interface level, the proper result is simply the percentage of the transmitter span represented by the known level. If *W* is the known level, then 20 in. represents 40% of the 50-in. span. For a 3- to 15-PSI output, this will be 40% of 12 (= 4.8) plus 3 PSI for the "live zero," giving a final answer of 7.8 PSIG. Similarly, for a 4- to 20-mA output, the result will be 40% of 16 (= 6.4) plus 4 mA for the "live zero," to give a final answer of 10.4 mA.

Bibliography

Appleby, S., Practical uses of pressure transmitters to monitor fluid levels, *Transducer Technol.*, February 1987.

Berto, F. J., Hydrostatic tank gages accurately measure mass, volume, and level, *Oil & Gas J.*, May 14, 1990.

Berto, F. J., Technology review of tank measurement errors reveals techniques for greater accuracy, *Oil & Gas J.*, March 3, 1997.

Binder, J., Becker, K. and Ehrler, G., *Silicon Pressure Sensors for the Range 2 kPa to 40 MPa* (English ed.), Siemens Components, Germany, April 1985.

Blickley, G. J., Level measurement choices, *Control Eng.*, August 1991.

Blickley, G. J., Tank gaging transmitter performs more functions, *Control Eng.*, August 1991.

Charrier, G. and Dupont, H., A liquid helium level detector, *Le Vide les Couches Minces*, France, March–April 1984.

Early, P., Solving old tank gauging problems with the new hydrostatic tank gauging technology, *Adv. Instrum.*, 42, 143–153, 1987.

Eman, J. F. and Gestrich, N., Selecting manometer-type level gauges, *Instrum. Control Syst.*, July 1977.

Gillum, D., *Industrial Pressure, Level, and Density Measurement*, ISA, Research Triangle Park, NC, 1995.

Hughes, T. A., *Measurement and Control Basics*, 3rd ed., ISA, Research Triangle Park, NC, 2002.

Hydrostatic tank gauging system offers accurate mass measurement, *Food Eng.*, March 1988.

Jethra, R. and Cushing, M., Application of dual sensor transmitters in challenging process environments, *ISA Technol.*, October 7, 1977.

Johnson, D., Doing your level best, *Control Eng.*, August 1977.

Labs, W., Level measurement, pressure methods dominate, *Instrum. Control Syst.*, February 1990.

Lanini, L. and Schneider, L., The dawn of new tank gauging system, *Adv. Instrum.*, 42, 155–161, 1987.

Mascone, C., New gauging system wins measure of approval, *Chemical Eng.*, 25–29, September 14, 1987.

Nef, G. G. and Evans, R. P., Line pressure effects on differential pressure measurement (PWR system), in *Proc. 29th Int. Instrum. Symp.*, ISA, Research Triangle Park, NC, 1982.

Piccone, R. P., A case for an HTG hybrid, *Instrum. Control Syst.*, February 1988.

Piccone, R. P., Combining technologies to compute tank inventory, *Sensors*, October 1988.

Proctor, A., The gauge comes of age (hydrostatic measuring techniques), *Process Eng.*, December 1987.

Reisch, F., Meeting the need for unambiguous PWR coolant level measurement, *Nuclear Eng. Int.*, January 1984.

Robinson, C., Hydrostatic tank gaging: what it is, where it's used, what's available, *InTech*, February 1988.

Rowe, J. D., Hydraulic tank gaging systems set inventory accuracy standards, *Inventory and Control Syst.*, February 1987.

Slomiana, M., Using differential pressure sensors for level, density, interface, and viscosity measurements, *Instrum. Technol.*, September 1979.

Waterbury, R. C., Transmitter keys hydrostatic gauging, *InTech*, July 1990.

© 2003 by Béla Lipták

3.7 Displacer Level Devices

D. S. KAYSER (1982) **B. G. LIPTÁK** (1969, 1995)
C. G. LANGFORD (2003)

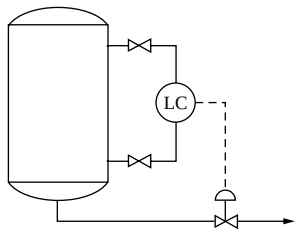

Flow Sheet Symbol

Design Pressure	Set by the flange rating of the chamber or by the maximum working pressure of the displacer, usually up to 100 PSIG (7 bars, 0.7 MPa) for the flexible disc and up to 600 PSIG (41 bars, 4.1 MPa) for the diaphragm-sealed designs. The flexible shaft unit can operate up to 1000 PSIG (69 bars, 6.9 MPa); torque-tube designs are available up to 2500 PSIG (170 bars, 17 MPa); magnetically coupled units can be used up to 6100 PSIG (410 bars, 41 MPa). Verify ratings with the manufacturer.
Design Temperature	Generally in the range of −50 to 451°F (−45 to 230°C). Inconel® torque tubes can operate from −350 to 850°F (−212 to 454°C). For electronic transmitters, the temperature of the topworks must be kept below 180°F (82°C). If the process temperature is above 500°F (260°C) or below 0°F (−18°C), thermal insulation barriers or torque-tube extensions are usually recommended.
Materials of Construction	Displacers are available in type 316 stainless steel, Monel®, polypropylene, or solid Teflon®. The hanger cable assemblies can be obtained in type 316 stainless steel, Monel®, and Hastelloy® C. The cage (chamber) is usually carbon or stainless steel.
Inaccuracy	Varies widely with application and the instrument, typically 0.5% of full scale.
Range	Standard displacers are available in lengths of 14 to 60 in. (0.35 to 1.5 m). The range of special units can go up to 60 ft (18 m).
Cost	Displacer-type switches cost from $200 to $500, and a 32-in. (0.81-m) electronic transmitter costs about $2500; add $500 to $700 for an external steel chamber.
Partial List of Suppliers	ABB Instrumentation Inc. (www.abb.com) Delta Controls Corp. (www.deltacnt.com) Dwyer Instruments Inc. (www.dwyer-inst.com) Endress+Hauser Systems & Gauging (www.systems.endress.com) The Foxboro Co. (www.foxboro.com) Magnetrol International (www.magnetrol.com) Masoneilan Operations Dresser Flow (www.masoneilan.com) Norriseal (www.norrisel.com) Schlumberger Measurement Div. (www.slb.com/rms/measurement) Siemens Moore Energy & Automation (www.sea-siemens.com) Yokogawa Corp. of America (www.yca.com)

INTRODUCTION

Archimedes' (c. 290 to 212 BC) principle states that a body wholly or partially immersed in a fluid is buoyed up by a force equal to the weight of the fluid displaced. A level or a density instrument is sensitive to the apparent weight of an immersed displacer. If the cross-sectional area of the displacer and the density of the liquid are constant, then a unit change in level will result in a reproducible unit change in the apparent weight of the displacer. The simplest level device of this type involves a displacer that is heavier than the process liquid and is suspended from a spring scale. When the liquid level is below the displacer, the scale shows the full weight of the displacer. As the level rises, the apparent weight of the displacer decreases, thereby yielding a linear and proportional relationship between spring tension and level. The spring scale can be calibrated as desired.

© 2003 by Béla Lipták

This simple device is limited to applications in open tanks. In practical industrial service, the basic problem is to seal the process from the spring scale or other force-detecting mechanism. This seal has to be frictionless and useful over a wide range of pressures, temperatures, and corrosion conditions. The variations in the design of this seal provide the basis to distinguish the types of displacement detectors that are in use and are discussed below. They are the magnetically coupled switch, the torque tube, the diaphragm and force bar, the spring balance, the flexible disc, and the flexible shaft design. Each of these units operates on Archimedes' principle but is different as far as its seals are concerned. All of them can be used to detect a liquid–vapor interface, a liquid–liquid interface, and, if the level is constant, the changes in density as well. The flexible disc unit is available as a pneumatic transmitter, and the flexible shaft unit is available as a high-gain pneumatic controller or as a switch. The other designs are available with integral pneumatic or electronic transmitters or controllers.

DISPLACER SWITCH

The major difference between a float level switch and a displacer level switch is that a float moves with the surface, whereas a displacer is partially or totally immersed and moves very little with process changes. Switching arrangements and installation considerations are similar for the displacer and float switches. Float-type switches are covered in the next section, and the discussion here will be limited to the design features of the displacer switch. Figure 3.7a shows a displacer mounted on a flexible cable attached to a support spring. When the tank is empty, the spring must support the full weight of the displacer. As the level rises, and the displacer becomes immersed in the liquid, the downward force on the support spring is reduced, and a small stem movement occurs to activate the switch.

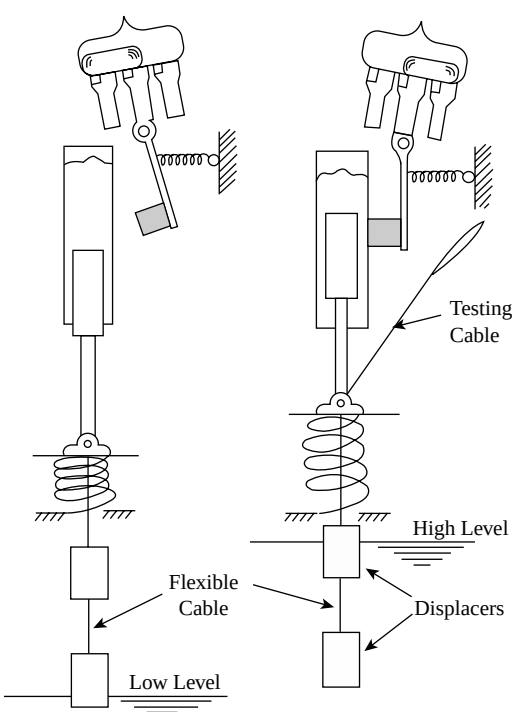

FIG. 3.7a
Displacement level switches.

Figure 3.7a also illustrates how the displacer level switch systems might be tested when installed in open tanks and sumps, or on floating roofs. The technician or operator can attach a testing cable as shown on the right side of Figure 3.7a. Once the cable is attached, lifting on the cable simulates a high-level condition, changing the state of the switch to prove the operation of the switch and probably the wiring.

In the next section, the operation of different switching contacts and the designs of the different float chambers are described. Although this information is provided for float-type switches, it is also applicable for displacer-type units. When deciding between float-type and displacer-type level switches, the following advantages can be noted for the latter:

1. The maximum differential between high and low settings can be as much as 50 ft (15 m).
2. Level settings are adjusted by moving the displacer(s) to a new elevation on the cable.
3. Moderate surface turbulence is less apt to cause switch chatter, because the cable is in tension.
4. Within broad ranges, fluid density has no effect on the displacer sizing diameter, making units interchangeable between services of varying density simply by changing the support spring.
5. The displacer switch is less apt to cause spurious trips in vibrating services, because the cable is always in tension. This is an important consideration for automatic shutdown systems such as may be used at compressor suction drums.

The displacer switch is available in many configurations to achieve the desired functionality. Some have multiple switches and can be used for multiple control functions. For example, a single unit can be used to sequence two pumps by actuating both pumps at high level, one at mid level, and neither at low level. The one disadvantage of most implementations of this style of displacer switch is that the support spring is exposed to the process. This limits the switch to applications that are reasonably clean, nonfreezing, and not corrosive to the available spring materials. One way to eliminate the need for a spring is to install the displacer horizontally and connect it to a microswitch through a flexible shaft seal (Figure 3.7b).

TORQUE-TUBE DISPLACERS

The torque tube shown in Figure 3.7c uses a tube in torsion to provide the spring function. The hollow torsion tube supports the displacer, which is always heavier than the process fluid, and also provides a frictionless pressure seal. This makes it

© 2003 by Béla Lipták

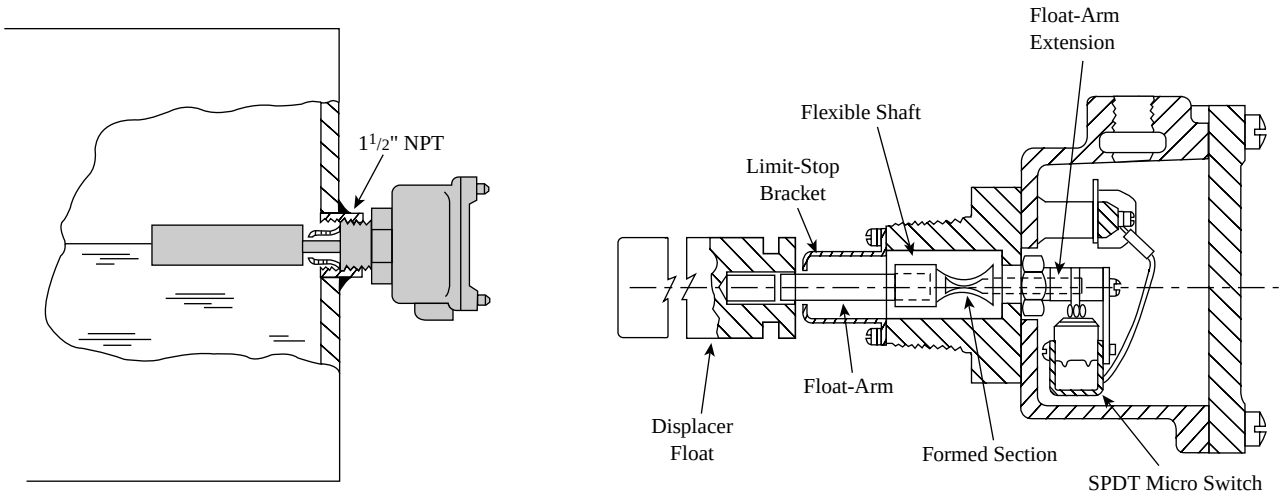

FIG. 3.7b
Side-mounted displacer switch. (Courtesy of Siemens Moore Energy & Automation.)

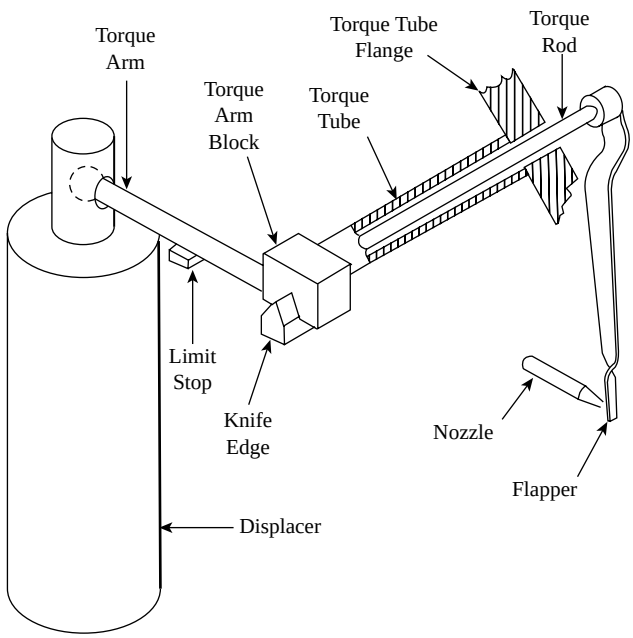

FIG. 3.7c
Torque tube displacer level detector.

possible to transfer the changes in the apparent weight of the displacer through the wall of the pressure vessel into a measuring device. Figure 3.7c is a schematic presentation of the displacer and torque tube. The displacers are typically cylindrical and can be furnished in a wide selection of plastic and alloy materials. Although any length displacer up to 60 ft (18 m) can be obtained, the most common lengths cataloged are 14, 32, 48, and 60 in. (0.3, 0.8, 1.2, and 1.5 m). The volume of a standard displacer is 100 in.^{3} (1638 cm^3), and the diameter is reduced as the length increases.

The torque arm connects the displacer to the torque tube and absorbs any lateral forces. Friction is minimized by use of a knife-edge bearing support. A limit stop prevents accidental overstressing of the torque tube by limiting the downward motion of the torque arm. The angular displacement of the torque tube and torque arm are the same at the knife edge end of the tube. At the flange end, the tube is anchored in place and does not rotate, but the torque rod is free to rotate the same amount as it did at the knife edge. The angular displacement, which amounts to about 5° or 6°, is linearly proportional to the apparent weight of the displacer and thus to the level or density. With the pressure sealing problem solved, it is a simple matter to convert the angular displacement to a usable electronic or pneumatic analog signal. The standard torque-tube material is Inconel®, but the torque tube is also available in stainless steel, Hastelloy®, Monel®, nickel, or Durimet. Note that the mechanical design requires the technician to be knowledgeable and careful in doing maintenance or repairs.

Sizing of Displacers

The technique given below for determining the desirable displacer diameter is applicable for all types of buoyant-force detectors, not just the torque-tube design. The displacer diameter sets the weight change of the displacer per level increment. The torque tube is designed to twist a fixed amount for each increment of buoyancy change. Therefore, in selecting the displacer diameter, the torque-tube characteristics, the density of the process fluid, and the level span must be considered. For purposes of this discussion, it will be assumed that the motion of the torque rod will be used to operate a proportional band controller. *Proportional band (PB)* refers to the response sensitivity of the controller, and it determines the percentage change in output signal in response to a 1% change in the level. A 100% apparent proportional band setting means that the level in the tank has to cover the displacer completely to generate a full output signal, and that

© 2003 by Béla Lipták

the level has to drop to the bottom of the displacer to generate the minimum output. A controller set to a PB of 100% can be used as a transmitter if the process fluid is water. At 50% apparent proportional band, a level variation of 50% of the displacer length produces minimum to maximum output, and, at 25% setting, a level variation of 25% will generate the minimum to maximum output.

The term *apparent* proportional band is necessary to distinguish the *actual* band setting on the instrument based on water density at standard temperature from the resulting *apparent* band related to the density of the process fluid being measured. Figure 3.7d shows the relationship between the two terms as a function of process liquid density. It can be seen from Figure 3.7d that, if the band setting on the instrument is 50%, the output of the controller will change 50% of the level change with a liquid gravity of 1. It will change 100% with a gravity of 0.5, and, with a specific gravity of 0.1, the output will equal 10 times the level change. The process fluid density thus affects the apparent gain of the controller in an inverse linear fashion.

Because the weight change per unit level change generated by the displacer is balanced by the torsion spring constant, the characteristics of the torque tube must be considered. The range of a standard torque tube matches the buoyant force generated by a 100 $in.^3$ (1638 cm^3) displacer in water for a band setting of 100%. This is equivalent to a force range of 0 to 3.6 lb_f (0 to 1.6 kg_f). Table 3.7e below lists the force ranges of standard and thin-wall torque tubes for one design at various proportional band settings. The thin-wall tube requires one-half as much force for full range operation as the standard-wall tube. Review the technical literature for the actual device used to confirm the actual numerical constants to use. The calculations here are only examples.

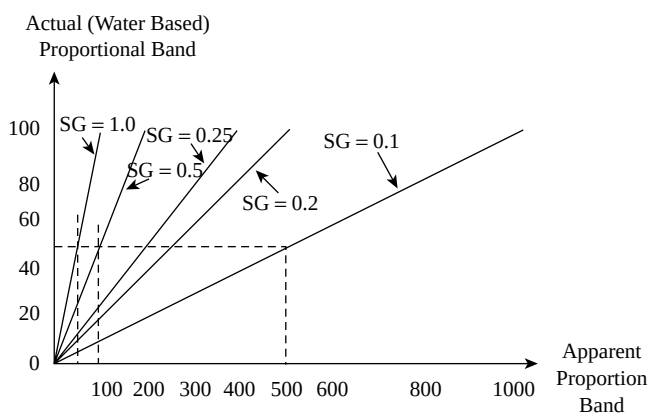

FIG. 3.7d
Relationship between apparent and actual proportional band.

TABLE 3.7e
Force Ranges of Standard and Thin-Walled Torque Tubes

Actual PB Setting (percent)	*Force Range for Std.-Wall lbf (Kgf)*	*Force Range for Thin-Wall lbf (Kgf)*
100	0–3.60 (0–1.6)	0–1.8 (0–0.8)
50	0–1.80 (0–0.8)	0–0.720 (0–0.32)
20	0–0.72 (0–0.32)	0–0.36 (0–0.16)
10	0–0.36 (0–0.16)	0–0.18 (0–08)

Interface Measurement

In most liquid level measurement applications, the specific gravity of the liquid is 0.5 (or greater), and it generates sufficient force on the torque tube for a full range of output signals, even with the use of a standard volume displacer, unless a very narrow proportional band is required. This may not be true for liquid–liquid interface applications. Difference in buoyant forces is generated only by the density difference between the two fluids, and the displacer must be completely submerged for meaningful readings. Therefore, available forces are smaller, and the sizing of displacers for liquid–liquid interface is more difficult and requires more attention.

On interface applications, it is advisable to select a displacer diameter to result in a 100% apparent proportional band when the actual band setting is 20%. This leaves additional adjustment capability to the operator who, if required, can reduce the actual band to 10% (the minimum recommended) to achieve a reduction in apparent band to 50%. An example will illustrate this.

Assume an installation in which the specific gravity of the light fluid is 0.98 and of the heavy fluid is 1.02, and the required displacer is 32 in. (812 mm) long. Furthermore, it is desired to generate full controller output over a level interface change of 16 in. (406 mm). To select a displacer diameter suitable for these requirements, it is necessary to calculate the displacer volume that will generate the force range required by a thin-wall tube when the level variation is 16 in. (406 mm). A thin-wall tube at an actual band of 20% requires a full-range force of 0.36 lb_f (0.16 kg_f). The calculation of displacer volume to generate this force is as follows:

Volume for 16 in. length

$$= (\text{torque tube force})/(\Delta SG)(\text{wt. of 1 in.}^3\ H_2O)$$

$$= 0.36/(0.004)(0.036) = 250\ \text{in.}^3 \qquad \textbf{3.7(1)}$$

$$\text{Diameter} = ((4V)/(\pi L))^{1/2} = [((4)(250))/((\pi)(16))]^{1/2} = 4.5\ \text{in.} \qquad \textbf{3.7(2)}$$

If it is required to broaden the actual proportional hand to 40%, full controller output will result from a 32-in. (812-mm) change in the interface. If the band is narrowed to 10%, full controller output will correspond to a level change of 8 in. (203 mm). If a standard-wall torque tube had been selected for the above example, the diameter of the tube would have worked out to about 6.5 in. The sizing method

© 2003 by Béla Lipták

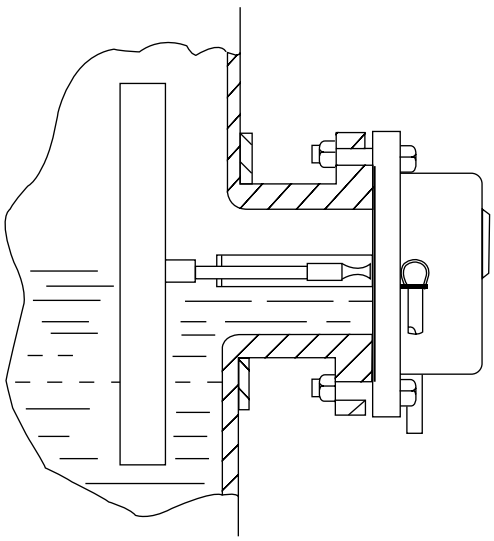

FIG. 3.7f
Side-mounted displacer. (Courtesy of Siemens Moore Energy & Automation.)

given can be used for all displacer applications including density detection. Standard displacer diameters are 3, 4, and 6 in. (76, 102, and 152 mm), but special sizes and designs are also available (Figure 3.7f). Carefully review the engineering specifications or check with the manufacturer for the details that apply to the specific instrument being considered.

In a large vessel, the interface may have a very slow but substantial wave motion if the difference between densities is small. The gravity forces are small, and the fluids have little friction to damp out any fluid motion. If no sight port is located so as to make this motion visible, the operator will have the impression that the signal or the control is cycling.

Rag Layer

Another cause of measurement doubt and confusion is the common situation of a *rag layer* of material, lighter than the heavy layer and heavier than the light layer, that will accumulate between the two desired layers. If there is no mechanism or procedure to remove this material, it will become ever deeper until it suddenly appears in the upper layer outlet. In continuous processes, even tiny amounts of undesired materials will always accumulate wherever conditions make this possible.

Features and Installation

Torque-tube level devices can be mounted internally or externally to the vessel. Internal displacers are used where it is possible to drain the tank for level detector maintenance. If the displacer is to be internally mounted, it is good practice to install it inside of a stilling well, which may be fabricated from a piece of pipe. To avoid errors, the standpipe must have a number of vertical slots or holes along its length to permit a free but restrained flow of liquids, and it should have a stop bar across the bottom to prevent the displacer from falling to

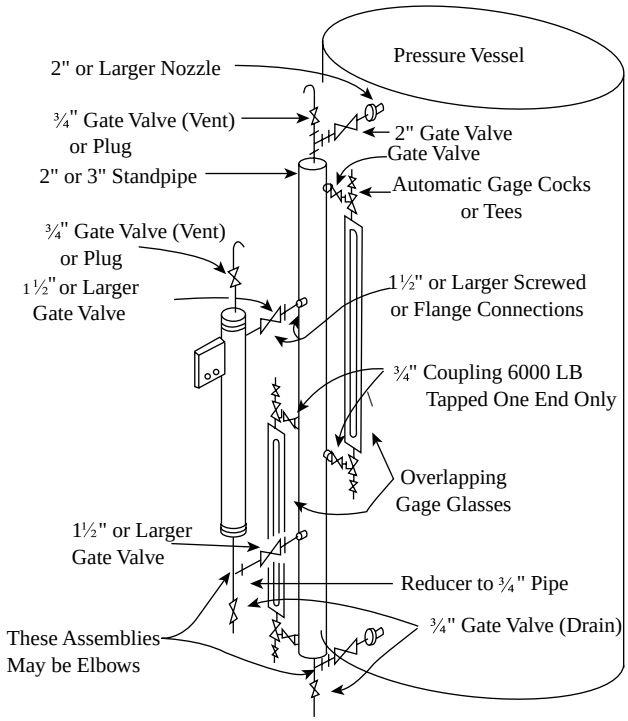

FIG. 3.7g
The installation of an external cage displacer on a standpipe with two level gauge sections. (Courtesy of the American Petroleum Institute, API RP 550.)

the bottom of the vessel if it becomes disconnected from the torque tube.

For installations in which the vessel cannot be opened and drained to perform maintenance on the displacer, it may be installed in a level chamber mounted outside of the tank and isolated from the process by means of lockable valves. Local safety rules must be observed. A single barrier between vessel and the environment may require special precautions.

It has been typical practice to install a level gauge to approximately match the span of the displacer to provide visual observation of the level. Figure 3.7g shows the installation of a displacer transmitter and level gauge mounted on a standpipe or level chamber. Note that the two units have independent isolation and drain valves. Some users prefer to eliminate the installation of breakable sight glasses for environmental and safety reasons.

When an external chamber is used, it may be necessary to heat-trace and insulate the level chamber for freeze or fire protection. The density measurement is for the liquid in the chamber and may not represent the vessel contents density if the level chamber temperature is not the same as the vessel bulk temperature. For liquid–liquid interface applications, the standpipe must have three connections to the vessel: one in the heavy liquid layer, one in the light liquid layer, and one in the vapor space that vents back into the vessel.

Special torque-tube and displacer designs are available for operating pressures up to 2500 PSIG (17 MPa). For high-temperature installations, the torque-tube material may be the

© 2003 by Béla Lipták

limiting factor. The spring characteristics of the tube will change at sufficiently high temperatures. Low temperatures have little effect on the spring characteristics of the tube. For torque-tube materials, Inconel® is suitable for temperatures between –350 and 850°F (–212 and 454°C). All other materials are limited to 500°F (260°C) except bronze, which is rated at 300°F (150°C). Torque-tube extensions will provide substantial thermal isolation for the instrument case. Installation details will also affect the instrument temperature. When the process is at a temperature above 500°F (260°C), finned extensions are recommended; when it is below 0°F (–18°C), plain extensions may be used. The extensions should not be insulated. Additional thermal insulation or thermal radiation barriers can be used to protect the indicating and transmitting portions of the instrument. Note that pneumatic transmitters may have a higher allowable temperature than the electronic version. Jacketed displacer chambers are available for hard-to-handle services if field-applied tracing is judged to be inadequate. The process connections on external chamber displacers are normally 1.5 or 2 in. (38 or 51 mm) and often flanged, so they may be used in mildly dirty services. Consider *blowdown* or drain valves where appropriate and permissible. It is preferred not to use external chambers if there is a likelihood of plugging because of solids accumulation.

The torque-tube displacer can be furnished with pneumatic or electronic transmitters or with local control. Controllers are available with gain, integral, and/or derivative control action. An output gauge should be installed on the transmitter signal to indicate level and for troubleshooting. It may also be good practice to install an independent level gauge. The torque tube and displacer design has an excellent field record for accuracy and reliability. Over time, accumulated noncondensable and solids may compromise accuracy, and some verification of proper performance is desirable. The torque-tube seal is virtually trouble-free if properly specified to meet the process requirements. In processes in which level setpoint changes are infrequent, or where speed of response is a concern, displacer units are often used as local level controllers, even if a sophisticated control system is used. The units may also be furnished with transmitter/controller combinations, allowing the advantage of local control with remote process indication.

SPRING-BALANCE DISPLACER

This instrument is similar to the torque-tube unit except that the spring function of the torque tube is replaced by a conventional range spring, and the isolation of the process from the instrument is by means of a magnetic coupling. As illustrated in Figure 3.7h, the displacer is suspended in the liquid by means of an extension range spring. As the level in the vessel rises or falls, the buoyancy force on the displacer changes, causing the spring to extend and contract. A magnetic attracting ball attached to the displacer rod rises and falls in response

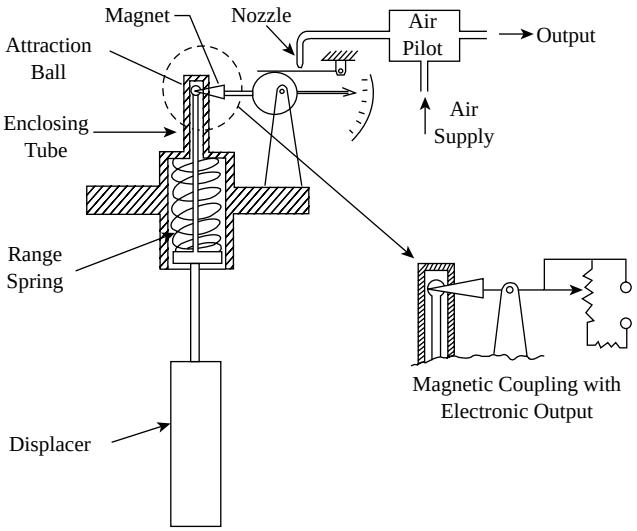

FIG. 3.7h
The old spring balance, magnetically coupled displacer.

to the displacer movement. The movement is about 1 in. (25 mm) full range. The ball is centered within the enclosing tube, and its movement is nearly frictionless. A follower mechanism moves with the magnetic ball for indication and signal transmission.

Other design features and accessories are similar to the ones discussed in the section on torque-tube design. The spring-balanced displacers are also available with corrosion-resistant wetted parts and are suitable for operating temperatures between –250°F (–157°C) and 600°F (316°C). Because the interior-to-exterior motion is magnetically coupled, units with very high pressure ratings to 6000 PSIG (41 MPa) are available. The merits and disadvantages of the spring-balanced design are similar to those of the torque-tube units, except that the movement of the displacer is greater, and the range spring is exposed to the process. Greater movement almost always causes faster wear at pivot points. The range spring exposure creates difficulty in installations where vapor space condensation, polymerization, or crystallization is expected, because material buildup on the spring will interfere with proper operation. Inert gas purging of the spring chamber has been used to prevent the process vapors from entering the chamber, but the large flow rates required make this solution impractical.

FORCE-BALANCE DISPLACER

The basic mechanism of the classic differential-pressure transmitters illustrated in the previous section can be adapted to produce another family of displacer level devices. Figure 3.7i shows the force-balance type of top-mounted design. Level variations in the vessel cause a proportional change in buoyant

© 2003 by Béla Lipták

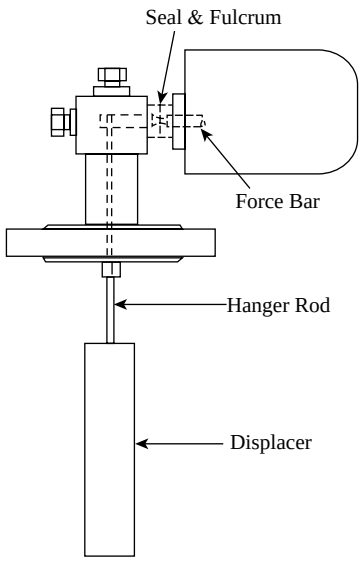

FIG. 3.7i
Force balance, diaphragm sealed displacement level transmitter. (Courtesy of The Foxboro Co.)

force of the displacer, reducing the apparent weight on the force bar as the level increases. In the side-mounted version, the process is sealed by a diaphragm, which also serves as the fulcrum of the force bar. The buoyant force is transmitted to the balancing rod, which pivots on the range wheel. An increase in level causes a minute movement that, it turn, is detected by the transmitter, which in the past generated a pneumatic signal. Today, the signal is electronic, in the form of either an analog signal or digital data communicated over the bus or network of the plant.

This instrument is available with the displacer mounted either inside the vessel or in an external chamber. The latter is used where maintenance must be performed while the tank is under pressure. The limitations of this device are similar to those of the torque-tube design, but the diaphragm seal is not as rugged as the torque tube, and the operating pressure is limited to 600 PSIG (4.1 MPa) with operating temperatures to 400°F (204°C). A variety of materials are available to meet requirements of corrosive services (see Table 3.7j).

The displacer sizing procedure for density, interface, or level detection follows the same basic method outlined for the torque-tube units, except that the buoyant force range involved is different. The buoyant force span for one standard unit is 2.90 lb_f (1.29 kg_f) or more; for the narrow design, it is 1.45 lb_f (0.65 kg_f) or more. The formula to calculate tile buoyant force is:

$$F = (0.36)(SG)(V)(Lw)/L \qquad \textbf{3.7(3)}$$

where

F = buoyant force in pounds
SG = specific gravity difference
V = displacer volume in cubic inches
Lw = working length of displacer in inches
L = total length of displacer in inches

This instrument is available for mounting either inside the vessel or in an external chamber. The latter is used where maintenance must be performed while the tank is under pressure. The limitations of this device are similar to those of the torque-tube design but, in addition, the diaphragm seal is not as rugged as the torque tube, limiting operating pressures to 600 PSIG (4.1 MPa) and operating temperatures to 400°F (204°C).

FLEXIBLE DISC DISPLACER

In case of the flexible disc design, as rising liquid level reduces the apparent weight of the displacer, a force balance mechanism detects this change in weight while maintaining equilibrium. The output signal is directly related to the level in the vessel. Span adjustments are made by changing the total length of the float arm.

The float arm is supported by the flexible disc. As a result of the force-balance principle of operation, all components maintain their predetermined position with essentially no movement. This protects the flexible disc from fatigue due to bending. The weight of the displacer and float arm is carried by the flexible disc, and the static pressure in the vessel acts upon the thrust pivots. Limit stops keep the float arm motion within the elastic limits of the disc when the vessel is empty.

This design has the same limitations as the other displacer units but has a narrower range of application, because the flexible disc seal limits its use to 100 PSIG (0.7 MPa) operating pressure. At higher pressures, the unit becomes inaccurate, and an increase in error of ±1% of full scale can be expected per 100 PSIG of process pressure. The flexible disc is normally made of stainless steel, but it is also available in Monel® and nickel. The displacer can be made of a wide variety of materials. The performance of this unit is generally inferior to the other designs covered in this section.

FLEXIBLE-SHAFT CONTROLLERS

This unit moves too much to be simply classified as a displacer and too little to be simply a float device. But the limited float motion makes it more nearly a displacer, so it is considered as such here. As with the other displacer designs, the flexible-shaft unit detects the buoyant force of the float with practically no motion involved approximately 1/32 in. (0.8 mm) travel. As shown in Figure 3.7k, the shaft is tubular, with a flattened center section that moves easily in the vertical direction but resists horizontal motion. In the pneumatic-controller version, the extension tongue transmits the float motion to an air pilot.

© 2003 by Béla Lipták

TABLE 3.7j
*Data on Displacer Materials, Sizes, and Other Features (Typical)**

	Metric Displacer Data					English Displacer Data			
			Maximum Working Pressure						
Material	*L (mm)*	*OD (mm)*	*MPa*	*bar or kg/cm*	*L(in.)*	*OD (in.)*	*Maximum Working Pressure (PSI)*	*Approximate Relative Density of Displacer (Specific Gravity)*	*Permissible Process Liquid Relative Density Limits (SG Term)*
316 SS	356	76	6.9	69	14	3	1000	2.95	0.42 and 1.6
	610	51	10.3	103	24	2	1500	2.52	0.56 and 2.2
	610	76	6.9	69	24	3	1000	1.69	0.25 and 0.98
	813	51	10.3	103	32	2	1500	2.28	0.42 and 1.6
	813	76	6.9	69	32	3	1010	1.22	0.18 and 0.7
	1016	51	10.3	103	40	2	1500	2.38	0.33 and 1.4
	1219	42	10.3	103	48	1.66	1500	2.27	0.39 and 1.6
	1270	51	7.6	76	50	2	1100	1.90	0.27 and 1.0
	1524	38	10.3	103	60	1.5	1500	2.41	0.39 and 1.6
	1524	76	10.3	103	60	3	600	1.31	0.10 and 0.4
	1829	33	10.3	103	72	1.31	1500	2.58	0.42 and 1.7
	2134	32	10.3	103	84	1.25	1500	2.60	0.40 and 1.6
	2438	27	10.3	103	96	1.05	1500	2.96	0.49 and 2.0
	2540	32	10.3	103	100	1.25	1500	2.43	0.34 and 1.4
	2743	27	10.3	103	108	1.05	1500	2.80	0.44 and 1.8
	2743	51	6.7	67	108	2	975	1.64	0.12 and 0.5
	3048	25	10.0	100	120	1	1450	2.47	0.44 and 1.8
	3810	25	10.0	100	150	1	1450	2.44	0.35 and 1.4
Monel®	356	76	6.9	69	14	3	1000	1.63	0.42 and 1.6
	610	76	6.5	65	24	3	950	1.69	0.25 and 0.98
	813	51	10.3	103	32	2	1500	2.28	0.42 and 1.6
	1524	51	6.9	69	60	2	1000	1.88	0.22 and 0.89
	2134	33	10.3	103	84	1.31	1500	2.60	0.36 and 1.5
	3658	25	5.2	52	144	1	750	2.47	0.37 and 1.5
Solid PTFE	356	76	10.3	103	14	3	1500	2.28	0.42 and 1.6
	813	51	10.3	103	32	2	1500	2.28	0.42 and 1.6
	1219	41	18.3	183	48	1.6	2650	2.28	0.42 and 1.6

*Courtesy of The Foxboro Co.

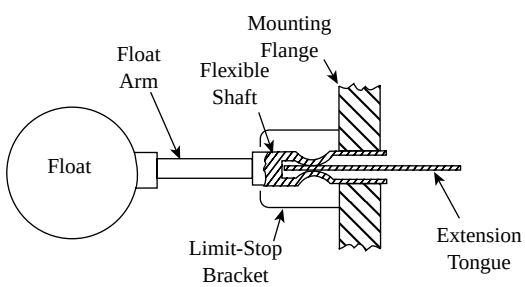

FIG. 3.7k
Flexible shaft level controller. (Courtesy of Siemens Moore Energy and Automation.)

An increase in level moves the tongue, gradually closing the vent of the pilot and increasing the output signal to the control valve. By turning the mounting flange 180°, the control pilot action can be reversed so that an increase in level will be accompanied by a decrease in the signal to the valve. The unit can also be provided as an on–off switch with either pneumatic or electric output.

As with other displacer designs, this device can be used to control interface or fluid density, but it is very limited in adjustment flexibility as compared to the torque-tube design. The flexible shaft unit has a narrow and fixed proportional band without integral action. The ball float has a throttling

© 2003 by Béla Lipták

range of approximately 0.5 in. (12.7 mm), depending on arm length. This high sensitivity limits application in many services. The flexible shaft level controller can be furnished with pressure ratings to 1000 PSIG (0.9 MPa) and temperature ratings to 700°F (371°C). Construction materials include stainless steel, nickel, Monel®, Hastelloy®, and others. The flexible shaft design is generally used in services where near on–off control action is desired. Cost is less than for the torque-tube devices.

CONCLUSION

The external-cage-type displacement level transmitters and controllers are very popular in power plants and chemical processes. Applications include close control of level in high-temperature and high-pressure vessels and where the process cannot be shut down for instrument replacement or maintenance. They have lost some ground to electronic level sensors, partly because they are limited to use on clean fluids, because dirt and material buildup on the displacer cannot be tolerated, and partly as a result of cost considerations. They are not confused by foam, vapors, and changes in vapor density of the devices used, the torque-tube type continuous units up to 60 in. (1.5 m) and the displacement-type switches are the most popular.

Bibliography

Anderson, J., Measuring level with displacers, *Instrum. Control Syst.*, June 1979.

API Recommended Practice 550, *Manual on Installation of Refinery Instruments and Control Systems*, Part I, Process Instrumentation and Control, Section 2, Level, American Petroleum Institute, Washington, DC.

Bacon, J. M., The changing world of level measurement, *InTech*, June 1996.

Bahner, M., A practical overview of continuous level measurement technologies, *Flow Control*, June/July 1997.

Boyes, W. H., The changing state of the art of level measurement, *Flow Control*, February 1999.

Carsella, B., Popular level-gauging methods, *Chemical Process.*, December 1998.

Cho, C. H., *Measurement and Control of Liquid Level*, ISA, Research Triangle Park, NC, 1982.

Felton, B., Level measurement: ancient chore, modern tools, *InTech*, August 2001.

Johnson, D., Checking level: not glamorous, sometimes dangerous, but necessary, *Control Eng.*, August 2001.

Koeneman, D. W., Evaluate the options for measuring process levels, *Chemical Eng.*, July 2000.

Lerner, J., Continuous level measurement: an introduction to 16 basic types, *Control*, November 1990.

Level measurement and control, *Meas. Control*, April 1991.

Paris, T. and Roede, J., Back to basics, *Control Eng.*, June 1999.

Parker, S., Selecting a level device based on application needs, in *1999 Fluid Flow Annual*, Putman Publishing, Itasca, IL, 1999, 75–80.

Paul, B. O., Seventeen level sensing methods, *Chemical Process.*, February 1999.

Sholette, W., Pick the proper level measurement technology, *Chemical Eng. Prog.*, October 1996.

© 2003 by Béla Lipták

3.8 Float Level Devices

D. S. KAYSER (1982) **B. G. LIPTÁK** (1969, 1995)
C. G. LANGFORD (2003)

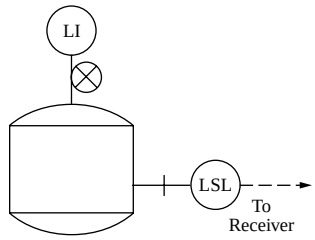

Flow Sheet Symbol

Types	Switches and transmitters can be mechanically or magnetically coupled and may have single- or multiple-point sensors. Indicators include the tape board gauge.
Design Pressures	Level switch units used in vending-machine type applications are usually limited to 100 PSIG (6.9 bars, 0.69 MPa), while magnetically coupled float level indicators can operate up to 1000 PSIG (70 bars, 7 MPa), and special designs can go up to 2000 PSIG (140 bars, 14 MPa).
Design Temperatures	Standard level switch units used in vending machine-type applications are usually suited for –40 to 225°F (–40 to 117°C); special designs are available for 500°F (260°C) and higher.
Float Materials	Brass, copper, stainless steel, Monel®, Hastelloy®, polysulfone, polypropylene, and other plastics
Costs	Vending-machine-quality level switches can be obtained for about $50; the cost of a type 316 stainless-steel industrial float switch ranges from $150 to $500, depending on the type of mounting and area classification. A tape-board-type level indicator costs about $500, and a continuous float level transmitter costs from $2000 to $5000.
Inaccuracy	The repeatability of actuation is about 1 in. (25 mm) for level switches and for guide-tube and float-type level indicators. The error in most level transmitters is about 1% of full scale. Consult the manufacturer for guidance if higher precision is required.
Partial List of Suppliers	See also the lists of suppliers in Sections 3.7 and 3.18. Almeg Controls (www.almegcontrols.com/small_h_d.htm) (switch) American Electronic Components (www.aecsensors.com) (tilt switch) Applied Geomechanics Inc. (www.geomechanics.com) (tilt switch) BinMaster (www.binmaster.com) (tilt switch) Bristol Babcock (www.bristolbabcock.com) (transmitter, pneumatic) Custom Control Sensors Inc. (www.ccsdualsnap.com) Custom Switches Inc. (www.custom-switches.com) (switch) Delta Controls Corp. (www.deltacnt.com) (switch) Dryden Aqua (www.drydenaqua.com/Float_switch/float) (tilt switches) Gauging Systems Inc. (www.gaugingsystemsinc.com) Gems Sensors Inc. (www.gemssensors.com) (switch) Harwil Corp. (www.harwil.com) (switch) Hersey Measurement Co. (www.aaliant.com) (transmitter and switch) Innovative Components (www.liquidlevel.com/products.htm) (switches and indicators) ISE Magtech (www.isemagtech.com) (transmitter and switch) Jo-Bell Products, Div. of Celtech Corp. (switch) Kelco Engineering (www.pumpshop.au.com/kelco.htm) (tilt switch) Krohne America Inc. (www.krohneamerica.com) (transmitter and switch) Magnetrol International (www.magnetrol.com) (switch, transmitter) Mercoid Div. of Dwyer Instruments Inc. (www.mercoid.com) (switch) Montech Systems Inc. (www.monitortech.com) (tilt switch)

© 2003 by Béla Lipták

MTS Systems Corp. (www.levelplus.com) (transmitters)
National Magnetic Sensors Inc. (www.nationalmagnetic.com) (float switches, reed switch, tape level indicators)
Norriseal (www.norriseal.com) (switch, transmitter, controller)
Nova Controls (www.novacontrols.com) (tilt switch)
Sherman Instruments (www.johnsherman.com/level)
Solartron Mobrey Ltd. (www.solartronmobrey.com)
SOR Inc. (www.sorinc.com) (switch)
TAV Engineering (www.tavengineering.com) (switches)
Techmark Corp. (www.tm-techmark.com) (tilt switch)
Thomas' Products Ltd. (www.thomasprod.com) (switch)
W. E. Anderson Div. of Dwyer Instruments (www.dwyer-inst.com) (switch)

In addition to this section, other sections in this handbook discuss float-type devices. These include the displacer-type level devices discussed in Section 3.7, the magnetic level gauge covered in Section 3.10, and the various tape level devices discussed in Section 3.18. In addition, the float level control valves, which are covered in Volume 2 of this handbook, also utilize floats for their operation. In addition, floats are combined with capacitance and ultrasonic level detectors.

INTRODUCTION

The immersion of a theoretically perfect float would have a perfectly constant immersion depth. The immersion of real floats is not perfectly constant because of the work they have to do to move the mechanical components of the instrument.

The level devices discussed in this section can be functionally grouped into point-sensing level switches and continuous or proportional level devices such as level indicators, controllers, or transmitters. They can be directly connected or can include isolation or seal devices; if they have seals, one can also group them according to the method of sealing used. The older ball-float gauges depended on stuffing boxes for sealing. The newer designs use magnetic coupling or other, more reliable means to separate the pressurized process from the readout.

The float in float level switches and indicators follows the liquid level or the interface level between liquids of differing specific gravities. The commonly understood difference between the float and the displacer is that floats are allowed to move if level or density changes, whereas the displacers do not move—or move very little. This means that the float devices follow the changes in level more closely, while the displacer follows the changes in density more accurately.

Standard floats for top mounting are spherical or cylindrical; they are spherical or oblong for side-mounted designs. Spherical floats are available from 3 to 7 in. (76 to 178 mm) in diameter. The smaller-diameter floats are used in higher-density materials, and the larger ones are used in liquid–liquid interface detection applications and for measuring the level of lower-density materials. Another reason for using larger floats is to provide additional force for operating the associated instrument.

FLOAT LEVEL SWITCHES

Figure 3.8a illustrates a simple device that can be used for level indication or switch actuating in atmospheric tanks or sumps. The ball float has a rod connected to it, and the rod motion is used either to indicate level on a gauge board or to trip any combination of high- and low-level switches for alarm or automatic starting and stopping of lift pumps. For some pump applications, the float and rod may be furnished with the pump and can be factory assembled by the pump manufacturer.

Figure 3.8b illustrates the operation of the magnetically coupled and spring-loaded float switch. The magnet and switch are assembled on a swinging arm that rotates on a pivot. As the liquid level rises, the float rises with it and lifts the attractor. When the attractor reaches its high position, it pulls in the magnet on the swing arm against the nonmagnetic enclosing tube, thus tilting the mercury switch to the right. The spring is selected so as to provide snap-action switching. When the switch tilts, the middle-to-left leg circuit is broken, and the middle-to-right leg circuit is closed.

The magnetic coupling across the enclosing tube isolates the process liquid from the switching elements of the instrument. The swing-arm design can also be arranged to operate one or more dry contact switches. When two switches are

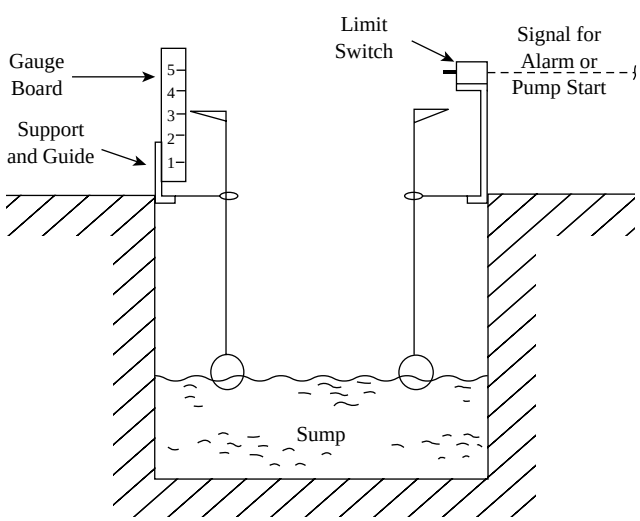

FIG. 3.8a
Float-operated point switch trip for sump level.

© 2003 by Béla Lipták

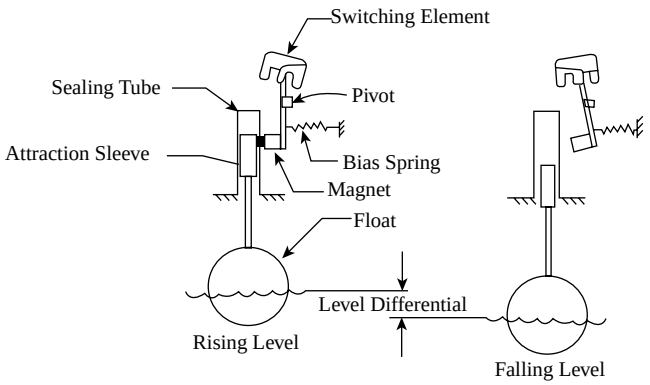

FIG. 3.8b
Operation of the float-operated level switch with mercury switching element. (Courtesy of SOR Inc.)

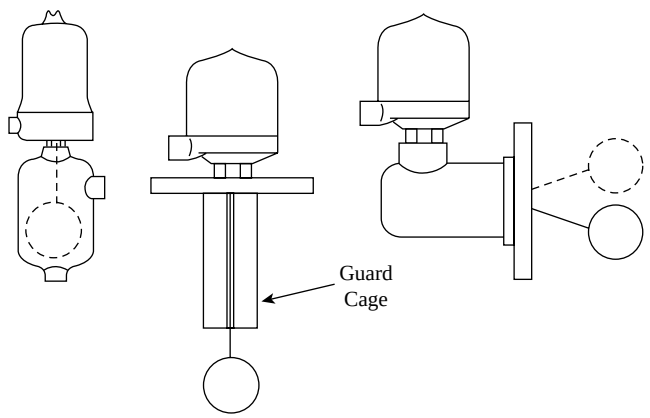

FIG. 3.8c
Float switches mounted inside external chamber or on the top or side nozzles of tanks.

employed, they can be spaced approximately 1 to 3 in. (25 to 76 mm) apart. One disadvantage is that making changes to the setpoint or the span of this and other float-operated switch designs can be complicated and time consuming.

Figure 3.8c shows some of the external top- and side-mounted float switch designs. The switch operating point is the vessel nozzle elevation. These direct-connected installations usually require that the vessel be depressurized and drained for maintenance. If this would cause a plant shutdown or interfere with normal operations, an external cage (chamber) design can be used. The external chamber can be isolated from the vessel by shutoff valves, which make maintenance possible without draining the vessel—if local safety practices permit.

If ambient temperatures can cause the process fluid to freeze or gel, the external chamber should be heat traced.

Another type of single-point magnetically coupled float switch is illustrated in Figure 3.8d. As the process level rises, the float rises with it, and the float magnet pivots down, which attracts the switch magnet. As it moves up, it changes the state of the electric or pneumatic switch. This design is available with a plastic boot that covers the float magnet and

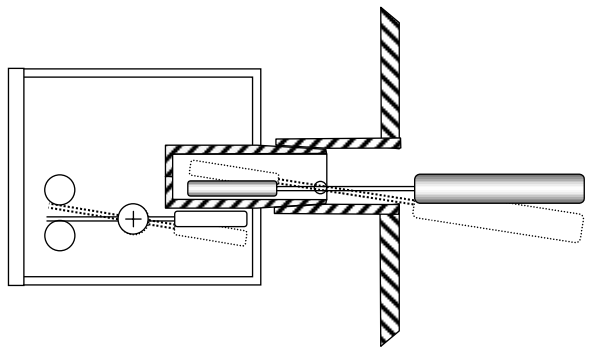

FIG. 3.8d
Magnetically coupled float level switch.

the float pivot point to prevent the buildup of solids or caking at the pivot. If the boot is used, it lowers the pressure and temperature ratings of the switch. The previous discussion on direct versus external cage mounting also applies to this switch design.

Reed-Switch Designs

Some of the earlier reed-switch-based level switches consisted of several moving parts, which contributed to their potential for maintenance problems caused by corrosion and plugging. Figure 3.8e illustrates one such design, containing a spring-opposed shuttle-and-cam mechanism. Here, the level lifts the float, which in turn rotates a cam counterclockwise, thereby moving the permanent magnet into close proximity with the reed switch. As a result, the switch changes its electrical state.

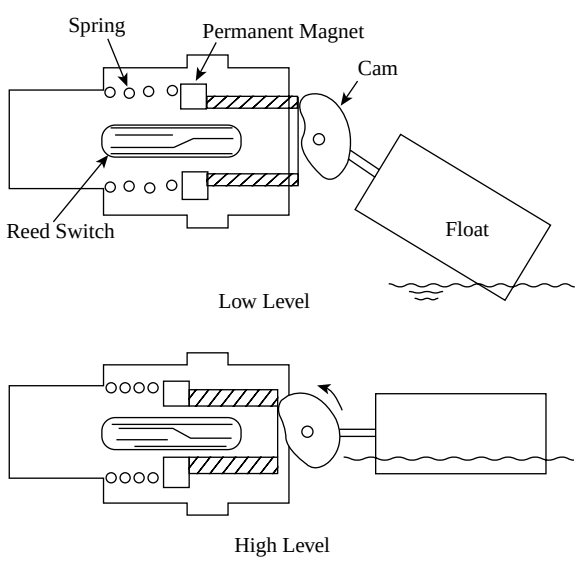

FIG. 3.8e
Magnetically coupled level switch, which is triggered by a float-operated cam.

© 2003 by Béla Lipták

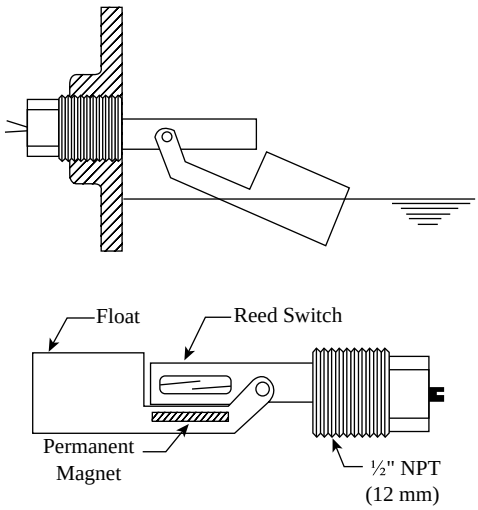

FIG. 3.8f
Reed switch-type level sensor which is operated by a plastic float. (Courtesy of Thomas Products Ltd.)

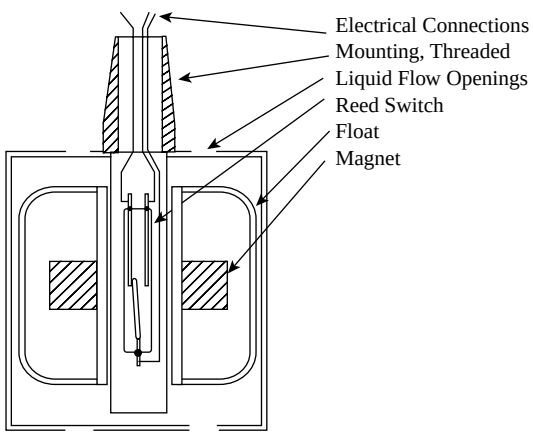

FIG. 3.8g
Reed switch-type level float.

The main concerns with most such designs are ruggedness, simplicity, and the ability to overcome the resistance of dirt or material buildup that resists float motion. For these reasons, the more successful designs tend to have only one moving component and a relatively large float on a relatively long float arm to maximize the angular momentum generated.

An inexpensive float switch used in vending machine applications is illustrated in Figure 3.8f. This unit is available in polypropylene and in polysulfone materials and can be used from –40 to 225°F (–40 to 107°C) and up to 150 PSIG (10.3 bars, 1.03 MPa) operating pressures.

In another all-plastic level switch, also used in vending machines, the float and reed switch assembly is contained within a housing chamber that is inserted vertically into the process (Figure 3.8g). The process fluid enters this chamber and lifts the float (which contains the magnet) until it actuates the hermetically sealed reed switch within the stem.

It is always wise to inquire into the electrical ratings of a reed switch. Devices that are mounted in the field with long

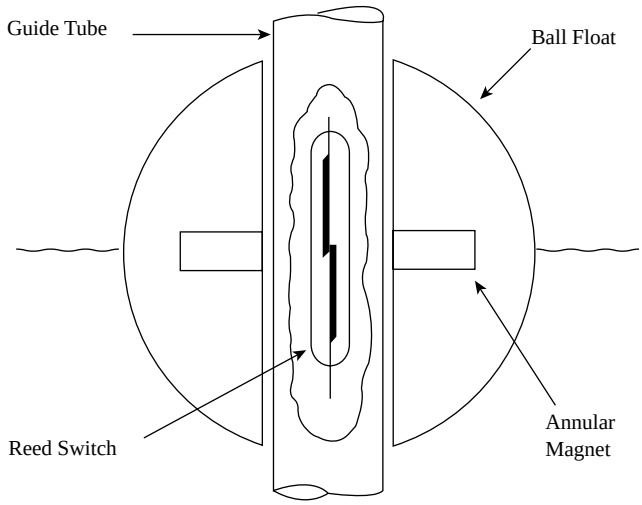

FIG. 3.8h
Ball float-operated and magnetically coupled reed switch.

cable runs (possibly in a cable tray) may be exposed to induced currents and high voltages resulting from electrical storms. In such cases, voltage surge protection is needed, because such voltage surges can destroy small switches.

Float and Guide Tube Designs

The float and guide tube design shown in Figure 3.8h is also a magnetically coupled float switch. In its simplest configuration, a reed switch is positioned inside a sealed, nonmagnetic guide tube at the point where the rising or falling liquid level is to actuate the switch. The float, which contains an annular magnet, rises or falls with the liquid level while it is guided by the tube. In the design shown in Figure 3.8h, the switch is normally open and closes when the float reaches the elevation of the switch.

The switch closure can be used to sound an alarm or to initiate logic functions such as starting a pump. The switch will reopen when the float falls, or if it rises and the switch cannot detect whether it was closed by a falling or a rising float. As a solution for answering this question, a mechanical stop can be placed on the guide tube to prevent the float from rising above the elevation of the switch. With the stop installed, the switch will stay closed whenever the level is at or above the switch elevation and will open only when the process level falls. Several mechanically stopped floats can be placed along the same tube to provide multiple switching at different levels.

Figure 3.8i shows this configuration. Two floats and two switches are used to control a sump pump, which is started on high level and stopped on low. When the level in the sump is below the elevation of the *level switch low* (LSL), both LSL and *level switch high* (LSH) are open, and the relay coil R is de-energized. When the level rises above LSL, it closes that switch. If it continues to rise, when it also closes LSH, relay coil R is energized, and the relay contacts R1 and R2 are both closed.

Contact R1 is a "hold-in" contact around LSH, whereas the R2 closure starts the pump motor. When the liquid level

© 2003 by Béla Lipták

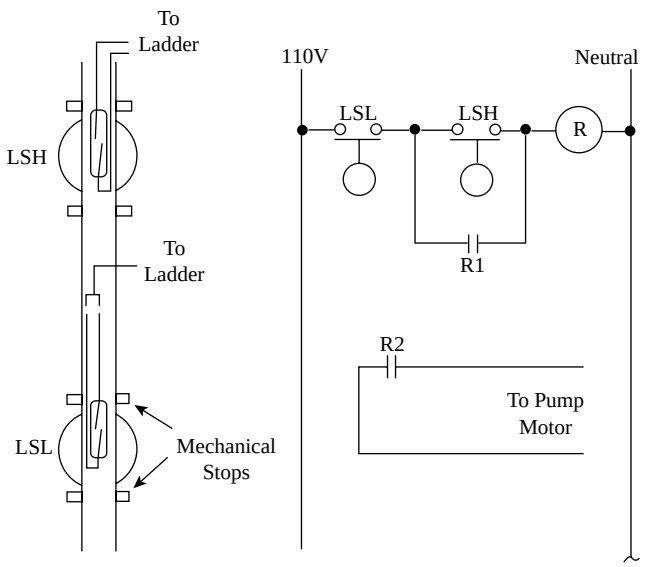

FIG. 3.8i
Pump-down control system for operating a single pump.

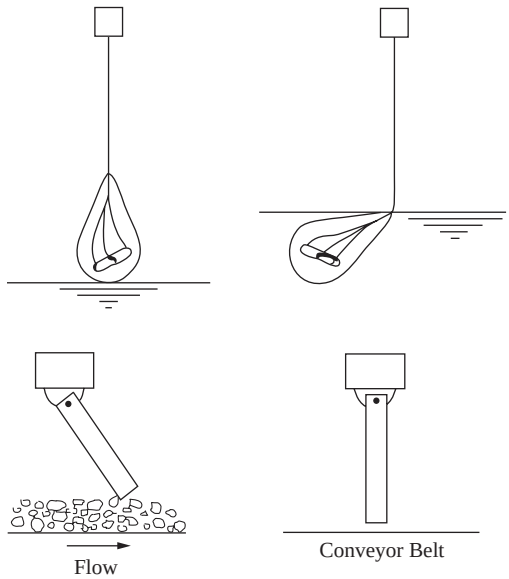

FIG. 3.8j
Tilt switches for liquid (top) and solids service (bottom).

drops below LSH, it will open, but the pump will remain energized, because the still-closed R1 keeps relay R energized. When the level falls below LSL, the opening of that switch will de-energize the relay coil, which in turn sets both R1 and R2 to open. At this point, the pump shuts down, and the system is at the initially described state. By adding more floats and switches to the assembly, more complex control schemes can be devised.

Tilt Switches

Figure 3.8j illustrates two commercially available tilt switch designs: the upper one for liquid and the lower one for solids services. In the liquid level detector switch, a mercury switch is enclosed in a plastic casing and is freely suspended from a cable at the desired level. When the liquid reaches the plastic casing, it tilts it, causing the switch to close (or open) an electric circuit, which in turn actuates a warning device or starts a pump. This device is used in sumps and ponds and is limited to atmospheric pressure and ambient temperature applications. If it is installed outdoors above grade, it should be sheltered by a windscreen.

The second tilt switch design, shown in the lower half of the figure, is used primarily to detect the presence or absence of solids on a conveyor belt. As long as there is material on the conveyor belt, the switch is tilted up. If the feed to the belt is lost, the switch rotates to its vertical position, and the switch contacts change state, thereby enabling alarm actuation, belt shutdown, or other automated actions to be initiated. Other designs are available that use a steel ball. As it changes position, the ball also operates a switch as the housing is tilted. This design is available for corrosive or pressurized services.

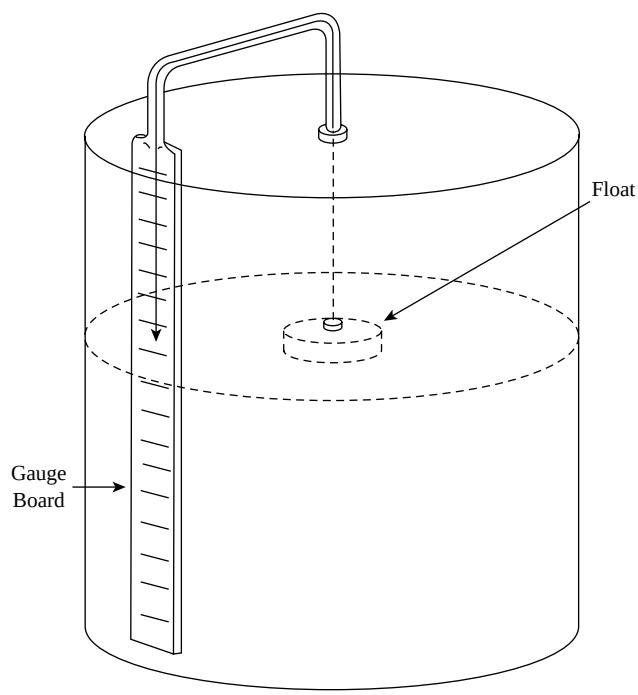

FIG. 3.8k
Tape gauge operated by float and provided with a gauge board for level indication.

Float-Operated Continuous Indicators

The simplest and most direct method of float level measurement is illustrated in Figure 3.8k. The unit shown is basically a tape gauge (detailed in Section 3.18). A tape is connected to a float at one end and to a counterweight at the other, thereby keeping the tape under constant tension. The float

© 2003 by Béla Lipták

moves the counterweight up and down in front of a direct reading gauge board, thereby indicating the level in the tank. The installation shown is typically used on water storage tanks, although it can be used in any processes that are left open to the atmosphere. Float and tape materials are selected to suit corrosion requirements. The instrument range is a function of tape length used, which can be up to 100 ft (30 m). For float devices used in closed tanks, refer to Section 3.18.

Pressurized Tank Applications

When float-operated devices are used on pressurized tanks, they require a seal between the process and the indicator. In most cases, the float motion is transferred to the indicator by magnetic coupling, but other designs also exist.

Where no external power source is available, the float level indicator shown in Figure 3.8l can be used to obtain remote indication.

When the level of the tank rises, the float moves up, and the float arm rotates around the float arm pivot, thus pulling the push rod down. This, in turn, operates the stroke lever. The stroke lever turns on its pivot, which is sealed inside the bellows. This motion is carried by linkage to the *tank side bellows* (A and B). As bellows A is compressed, some of its filling liquid is transferred into receiver bellows C. At the same time, as bellows B is expanded, it draws some of the filling liquid from receiver bellows D. The net result of this action of the differential bellows is to change the position of a remote level indicator, which requires no power supply.

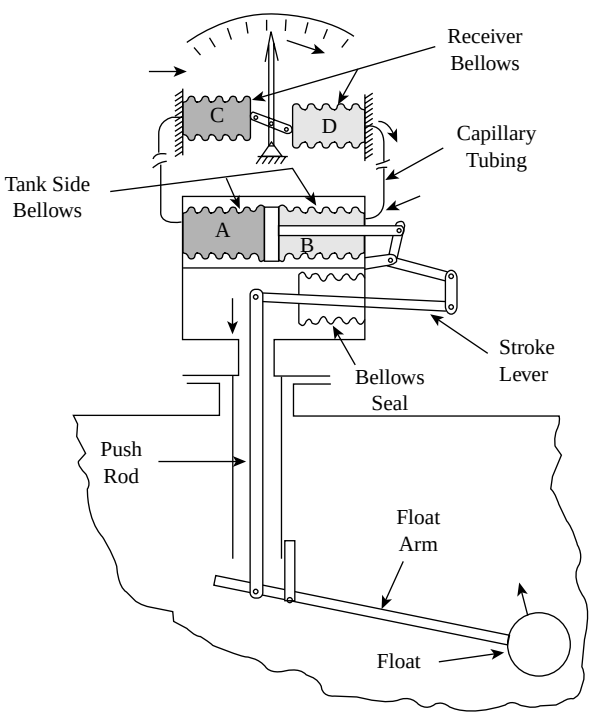

FIG. 3.8l
Float gauge provided with liquid-filled bellows and capillary tubing for remote level indication.

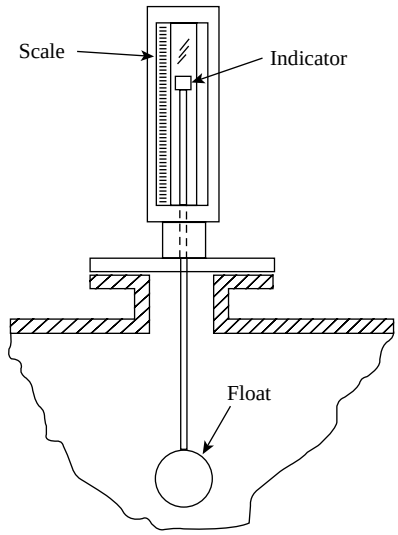

FIG. 3.8m
Rotameter indicator adopted as a means of displaying level.

These liquid-filled float gauges are available with temperature compensation to eliminate the effect of ambient temperature variations on the measurement. For installations in which the process vapors are not corrosive to copper and the operating pressure is below 15 PSIG (0.1 MPa), the bellows seal shown in the sketch can be eliminated. If the seal is used, it allows the unit to be exposed to 200 PSIG (1.4 MPa) operating pressures while isolating the process vapors from most of the working parts. The bellows seal and other parts that are wetted by the process can be made out of stainless steel, Monel® aluminum, synthetic rubber, or other materials. The capillary tubing between tank side and receiver bellows can be up to 250 ft (76 m) in length.

Figure 3.8m shows another simple level indicator. The float can be placed directly in the tank or mounted in an external chamber that is provided with isolating valves. The maximum level range of the device shown, which uses a standard variable-area flowmeter indicator, is 15 in. (381 mm). This limits its use to narrow-span applications. Another variation, used on home heating oil tanks, is designed with both a pivoted and a rotating arm to allow use of the short indicator scale.

Materials of construction are either steel or stainless steel, with glass indicating tubes used on nonhazardous, low-pressure services only. In other installations, metal tubes are used with magnetic coupling to drive the scale indicator. This design can be used for operating pressures to 1200 PSIG (8 MPa) and temperatures to 800°F (427°C). The rotameter design can be used for local indication and can be equipped with high and low alarm switches and electronic or pneumatic transmitters.

Magnetically Coupled Indicators

Continuous level indication can be obtained by placing many closely spaced switches inside a guide tube and detecting which ones are being held closed by the magnet as it is lifted with the ball float (Figure 3.8n). In this design, a voltage divider

© 2003 by Béla Lipták

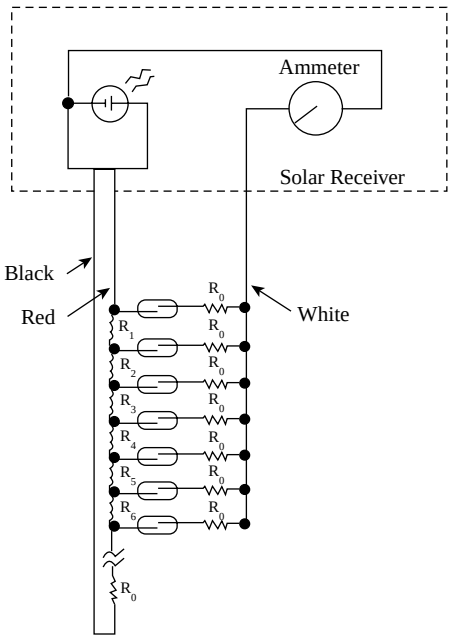

FIG. 3.8n
Magnetically coupled level indicator, which detects the status of float operated switches inside a guide tube.

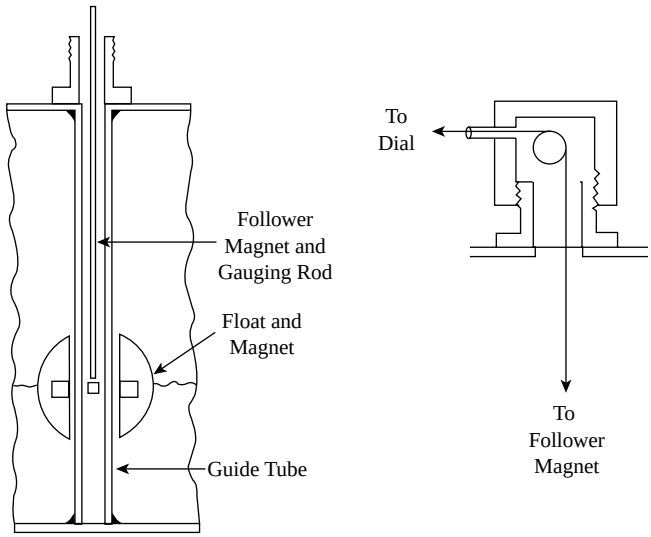

FIG. 3.8o
Level display can be at ground level, if float operates a magnetic follower inside a guide tube.

network is configured by connecting resistors R1, R2,…, Rn in series across the power supply. Since the resistors have equal value, the voltage drop across each one will be equal. If the magnet in the ball float closes the third switch from the top, for example, the voltage between R2 and R3 will be impressed on R0, causing a very small current to flow through the ammeter. As the level continues to fall and closes the fourth switch, R4 is inserted into the circuit, and the voltage to R0 will be reduced.

The ammeter scale may display the level in percentage or in engineering units. Resistor R0 is specified at a high value so that current flow through the meter is small in comparison with that in the divider. The switches can be placed with a minimum spacing down to 0.25 in. (6 mm), which is the resolution for this type of indicator. As can be expected, replacement of faulty switches is difficult, so the guide tube normally includes spare (redundant) switches installed at each point. Maximum length available for this design is 10 ft (3 m) if the assembly is furnished with the metal guide tube. However, it is possible to obtain a flexible, plastic-jacketed assembly that can be furnished in longer coils. The plastic jacketed assemblies are field installed into stainless steel or other nonmagnetic guide tubes. Solar-powered versions of this design are also available.

Figure 3.8o shows how the magnetically coupled float and guide tube design can be used for manual gauging or to operate a direct-reading dial. The sketch to the left shows the same magnet-carrying float and guide tube as described earlier. But here, instead of switch closures, the magnet is used to reposition a gauging rod. As the level moves the float up, the rod projects farther out of the tank, thus indicating the rising level. When the gauge is not in use, the rod can be pushed down to the bottom of the well, and the opening can be capped. This feature makes the gauge attractive for use on transportation tankers.

Given the right geometry, this system can also be installed from the bottom so that the reading can be made from under the tank. As shown on the right side of the sketch in Figure 3.8o, this design is also available with a direct-reading tape-driven indicator. This unit eliminates the need for the operator to climb on top of the tank. The major drawback of this design is that, if the pipe that contains the tape is ruptured, a spill can result unless some other form of spill protection is provided.

Another magnetically coupled float design is shown in Figure 3.8p. This gauge has been installed on a fair number of stationary and mobile liquefied petroleum gas and anhydrous ammonia tanks. The vertical motion of the float is converted

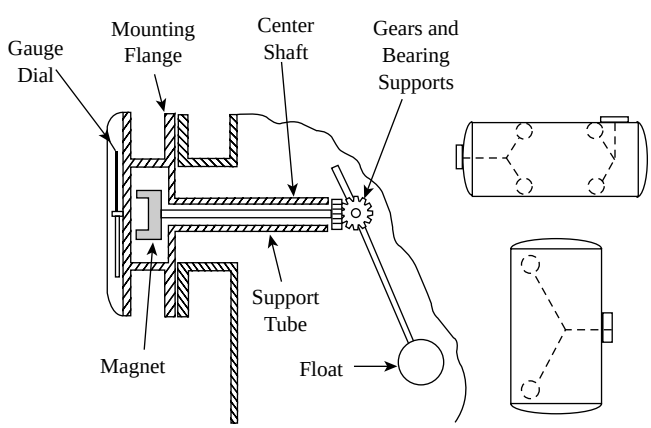

FIG. 3.8p
Magnetically coupled float-type level indicator.

© 2003 by Béla Lipták

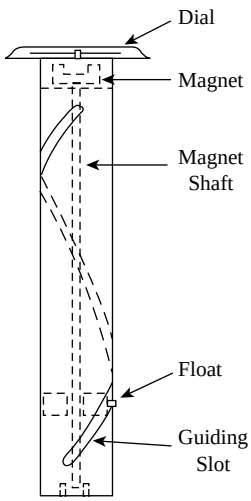

FIG. 3.8q
Magnetically coupled float gauge with float inside a slotted guide tube.

to rotary motion by the use of gears and pivots. The center shaft, in turn, positions a permanent magnet behind the dial pointer. There are no shaft connections or holes for any purpose through the gauge head, because it is the magnetic coupling that positions the pointer. This magnetic coupling guarantees a leakproof installation and is applicable up to an operating pressure of 1000 PSIG (6.9 MPa).

The readout dial can be calibrated for horizontal, vertical, and spherical tanks and, for good readout visibility, the dial diameter can be up to 8 in. (203 mm). Figure 3.8p also illustrates some of the options for locating the dial on the side or top of tanks. The standard material of construction for the wetted parts is stainless steel. As with most float-operated indicator designs, remote-readout configurations are also available.

The common automobile gasoline tank gauge is simply a float on an arm. This arm turns a variable resistor, and the change in resistance changes the current that flows through the meter on the dashboard.

Figure 3.8q illustrates a level indicator utilizing a slotted tube combined with a magnetically coupled float level indicator. This design can be considered for installations where the shape or the internals of the vessel prevent the use of the rotary-type float gauge. As the float rises, enclosed in a tube that has a guide slot, its angular position is determined by the slot. The rotation of the float turns the shaft of the magnet and the magnet repositions the pointer on the dial, which indicates the level. This device is used primarily on liquid transporters. It has a limited pressure rating and cannot be used in corrosive services.

DENSITY MEASUREMENT

Hydrometers are discussed in detail in Section 6.3 but, also being float operated, they are mentioned here. In a hydrometer (Figure 6.3a), a calibrated float with a small-diameter upper section is placed in the process fluid and sinks to a level where the buoyancy and its weight are in balance. One version is calibrated to detect the composition of automobile radiator cooling liquid. Another version is calibrated to measure the state of charge of a lead-acid battery. Others can be calibrated for the specific gravity ranges of various liquids and mixtures.

CONCLUSION

Float-operated devices are widely used in utility services and as alarm switches. In some applications, the size of the float may limit its use; in other designs, the associated support and guide tubes cannot be accommodated. Other limitations include that the immersed magnets will accumulate pipe scale and other ferrous metal particles from the process. These buildups will eventually interfere with the proper operation of such switches.

In all areas of instrumentation, it is safe to assume that trash, dirt, and solids will always accumulate in unwanted places. Many of the float-operated designs have moving parts exposed to the process and therefore should not be used in dirty or plugging services. The ball float switch designs are relatively inexpensive and reasonably reliable. For these reasons, they are used (selectively) in industrial processes and routinely in a wide array of applications outside of the industrial area.

Applications of float level instruments include the protection of pumps and compressors by detecting the presence or the absence of liquids in pipes and vessels. Pneumatically operated level switches avoid the problems associated with the availability of electrical power or the issues of electrical hazards. Independent level alarm and interlock switches are used to back up other level measurements for overflow protection and other safety purposes. The large number of float level device suppliers is an indication of the wide variety of available designs, and the user is advised to search for the most current sources and designs.

Bibliography

API Recommended Practice 550, *Manual on Installation of Refinery Instruments and Control Systems*, Part I, Process Instrumentation and Control, Section 2, Level, American Petroleum Institute, Washington, DC.

Berto, F. J., *The Accuracy of Oil Measurement Using Tank Gaging*, ISA, Research Triangle Park, NC, 88–1561.

Felton, B., Level measurement: ancient chore, modern tools, *InTech*, August 7, 2001.

Flashlight, sunlight power tank level indicator, *Design News*, July 9, 1979.

Holzhausen, G. R., Using tilt to measure displacement, *Meas. Control*, September 1993.

Level measurement and control, *Meas. Control*, April 1991.

Luyts, J. and Marcelo, L. D., Fieldbus HTG System Measuring On-line Concentration, ISA, Research Triangle Park, NC, 1998.

Piccone, R. P., Combining technologies to compute tank inventory, *Sensors*, October 1988.

© 2003 by Béla Lipták

3.9 Laser Level Sensors

J. FEHRENBACH (1995) **M. VUJICIC** (2003)

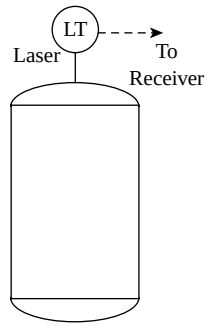

Flow Sheet Symbol

Applications	Granular solids, nontransparent liquids, slurries, and molten metals
Design Pressure	Unlimited; transmitter outside of tank
Design Temperature	Ambient at transmitter –40 to +50°C (–40 to 122°F) standard; up to 150°C (302°F) with cooling options; process temperatures up to 1500°C (2732°F)
Materials of Construction	Aluminum, alloys, or plastic enclosures
Inaccuracy	±5 mm (±0.2 in)
Range	0.2 to 250 m (0.5 to 800 ft)
Price	$4000 to $6000 USD
Suppliers	K-Tek Corp. (www.ktekcorp.com) Optech Inc. (www.optech.on.ca) Thermo MeasureTech (www.thermomt.com)

BACKGROUND

In recent years, laser-based level sensors have become accepted in industrial process control as a means of obtaining reliable noncontact level measurements in difficult applications. Process conditions or installation methods often preclude the use of more conventional noncontact gauges such as ultrasonic, radar, and nuclear devices, creating both a technical and economic advantage for laser technology.

Three types of laser technology are commonly used in the process control market today: pulsed, continuous-wave (frequency-modulated), and triangulation. It is important to be aware of the fundamental operating differences between the technologies and the suitability of each for specific types of applications.

Pulsed Laser Sensors (Time of Flight)

Pulsed technology is time of flight based; it measures the time for individual laser pulses to travel from the transmitter of the instrument to the target (where the beam is reflected) and back to the receiver of the instrument. The distance is then calculated using the time and the speed of light outlined by the formula,

$$D = (C \times T)/2 \qquad \textbf{3.9(1)}$$

where

D = distance to the target (m)
C = speed of light (3×10^8 m/sec)
T = time of flight of laser pulse (sec)

In general, pulsed lasers are used for most industrial level-monitoring applications because they offer better range and penetration characteristics (through dust and steam) without sacrificing accuracy and repeatability. Pulsed laser level sensors have improved greatly over the past few years with respect to dust penetration and pulse discrimination, allowing them to be used effectively in severe solids and vapor applications that were precluded in the past. Higher-quality pulsed laser sensors allow the user to select the return

© 2003 by Béla Lipták

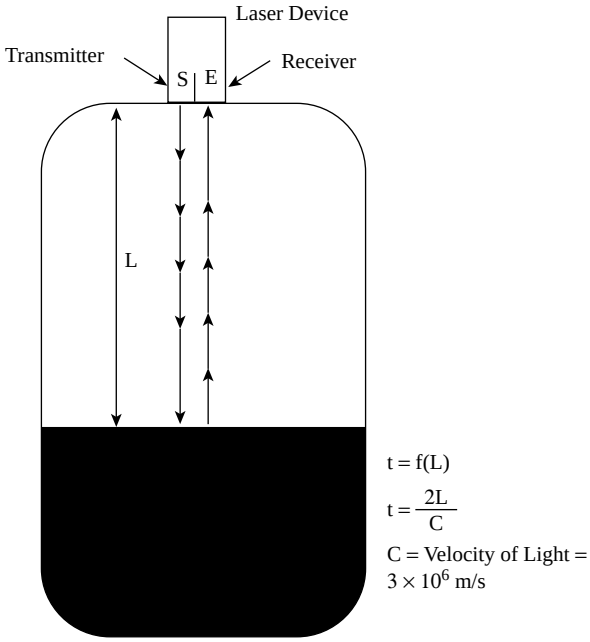

FIG. 3.9a
Level can be detected by measuring the time of reflection. Light travels at a speed of about 0.3 m per nanosecond (10^{-9} sec).

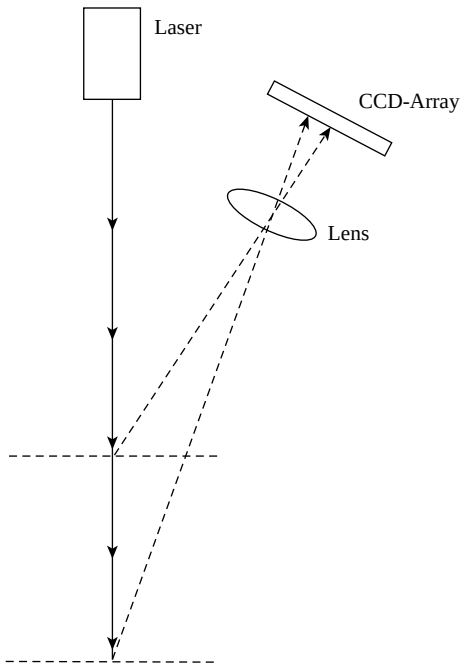

FIG. 3.9b
Triangular laser measurement is used in cameras and in robotics.

pulse of interest (first or last) so as to optimize performance in solids applications (see Figure 3.9a).

Frequency-Modulated (Continuous-Wave) Sensors

Continuous-wave laser technology directs a continuous laser beam at the target. When it hits the target, this beam is phase shifted and subsequently returned to the receiver. The outgoing and incoming beams are compared to determine the degree of phase shift and the distance is calculated on the basis of frequency, wavelength, and phase shift.

Continuous-wave lasers are better suited for short-range, extremely high-accuracy, clean-air applications usually found in laboratory-type settings. In terms of industrial applications, they are suitable for more benign applications, such as positioning, and are not usually used for level monitoring.

Triangulation Measurement Sensor

Triangulation measurement is done at an angle, with a sharply focused laser beam directed toward an object. The luminous spot on the target surface is optically projected to a CCD device, which maps out the intensity distribution of the reflected light. The electronics determine the illuminated CCD zone and the angle to the luminous spot. Because the angle change is reduced with increasing range, the accuracy also drops, making this type of measurement suitable only for a relatively short range. Primary applications for this type of measurement are object positioning and robotics. Because of these limitations, this method is not used for industrial level sensing (see Figure 3.9b).

PULSED-LASER LEVEL SENSOR

Installation

Pulsed-laser level gauges have many inherent properties that help overcome the limitations of other gauges and allow them to be the alternative of choice for many applications.

First and foremost, the laser level gauge is a nonintrusive instrument that provides a flexible mounting arrangement. Process vessel flanges can be closed off with the use of a process-rated sightglass (from vacuum rated vessels to 600 class), and the laser level gauge is mounted external to the process. The laser can effectively fire through a quality sightglass to the target with no interruptions to the production process for commissioning, adjustment, or troubleshooting. The fact that the process and gauge do not come in contact makes this approach ideal for applications such as corrosives and acids that would damage an ultrasonic antenna or a radar horn (Figure 3.9c).

Common practice is to use spray rings or air curtains to help keep the sightglass or sensor window clean to optimize performance when warranted by application conditions. Clean air or process-compatible gas or fluid can be continuously or intermittently injected to keep the glass surfaces clean and laser beam transmittance losses to a minimum. Higher-quality laser sensors can provide a return signal-intensity output that can be used to control the cleaning process or for general troubleshooting and optimization.

Vapor-Space Effects

Different gases and varying pressures and temperatures in the vapor space required for passage of the laser pulse do

© 2003 by Béla Lipták

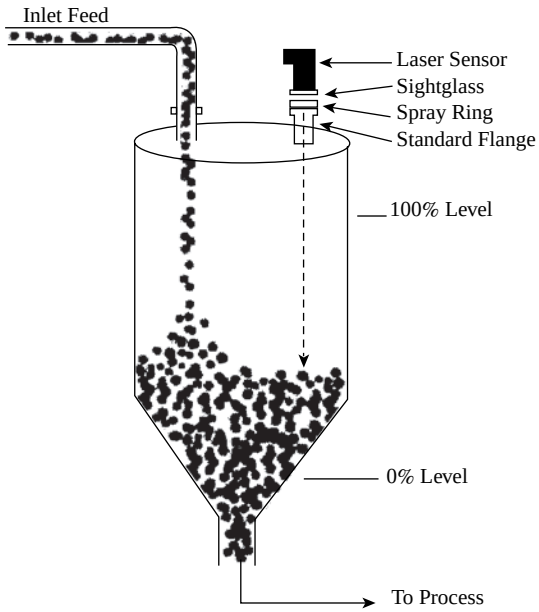

FIG. 3.9c
Installation of the laser level transmitter.

affect the speed of light and thus the level reading. The relationship is defined by

$$\text{Light velocity in a gas/vapor } (C) = C_o/N \qquad \textbf{3.9(2)}$$

where

C_o = light velocity in a vacuum (3×10^8 m/sec)
N = index of refraction for gas/vapor

Fortunately, the change in the index of refraction is minute, so the effect is negligible for industrial sensing applications, and no adjustment is needed for the laser sensor. It is therefore effective for a variety of applications. Table 3.9d shows values for the index of refraction (N) for some common gases/vapors. The laser is ideal for vacuum applications because, unlike ultrasonic sensors, the laser does not need a medium for propagation.

The laser beam itself, produced by a laser diode, is a very narrowly focused beam with minimal divergence (typically 0.3°). This narrow beam is ideal for applications where geometry is tricky, such as tall, narrow silos and vessels with baffles/agitators or support beams acting as obstructions. The fact that the beam is narrow means that a particular spot can be identified as the target, and no baseline echoes or elaborate subroutines are needed to eliminate obstructions as part of the calibration and commissioning procedure.

Types of Targets and Angle of Repose

Laser level gauges use extremely short wavelengths of the electromagnetic spectrum. Combined with the narrow beam, this makes them very accurate, even at oblique angles to the target. This translates into the ability to measure to solid targets with varying angles of repose consistently and reliably. Regardless of cone-up or cone-down conditions, the laser will provide accurate measurements to the specific point of contact without the reflection and beam bounce inherent in both ultrasonic and radar gauges. This unique property also makes installation and commissioning much easier and more flexible, as off-center and side mountings become possible.

TABLE 3.9d
Index of Light Refraction for a Variety of Gases and Vapors at 0°C and 1 Atmosphere

Dry air*	1.000293246	Krypton—Kr	1.0004287
Acetone—$(CH_3)_2CO$	1.0010867	Methane—CH_4	1.0004433
Acetylene—C_2H_2	1.0006007	Neon—Ne	1.0000672
Ethanol—C_2H_5OH	1.000870	Ozone—O_3	1.000520
Ammonia—NH_3	1.000379	Mercury vapor—Hg	1.000940
Argon—Ar	1.00028314	Oxygen—O_2	1.00027227
Benzol—C_6H_6	1.001759	Sulfur dioxide—SO_2	1.0006640
Bromine—Br_2	1.0011849	Carbon bisulfide—CS_2	1.001477
Chlorine—Cl_2	1.0007840	Hydrogen sulfide—H_2S	1.00065068
Hydrochloric gas—HCl	1.00045127	Nitrogen—N_2	1.00029914
Deuterium—D_2	1.00013758	Nitrogen dioxide—NO_2	1.0005087
Fluorine—F_2	1.000206	Carbon tetrachloride—CCl_4	1.0017819
Helium—He	1.00003495	Trichlorethylene—C_2HCl_3	1.001705
Iodine—I_2	1.002200	Steam—H_2O	1.0002527
Carbon dioxide—CO_2	1.0004506	Hydrogen—H_2	1.00013937
Carbon monoxide—CO	1.0003360	Xenon—Xe	1.0007055
		Xylene—C_8H_{10}	1.002135

*Air is defined as 78.08% N_2; 20.95% O_2; 0.93% Ar; 0.03% CO_2; 0.01% H_2 and rare gases.

© 2003 by Béla Lipták

One of the most flexible and useful properties of the laser is its ability to measure to a variety of different types of materials. Both solids and liquids can be effectively monitored with no adjustments required for target temperature, material dielectric, density, or other physical properties. Lasers have been used effectively for materials ranging from cryogenic temperatures to molten metals, with equally positive results.

Laser Eye Safety

In the United States, laser eye safety is regulated by the Food and Drug Administration (FDA). In Europe, it is regulated by the IEC. Both organizations have standards that govern eye safety (CFR1040 and IEC-60825) and these are generally accepted worldwide. The organizations are in the process of harmonizing their standards. Instrument engineers should try to specify and use Class 1 or 2 eye-safe lasers, if possible, to prevent inadvertent exposure to potentially dangerous laser sources. Additionally, engineers should ensure that the specified laser instruments indicate compliance with FDA and/or IEC guidelines for labeling, safety, manufacturing requirements, and power regulation. Class 1 and 2 laser level sensors can be used freely in industrial applications and require no specific registration or training requirements.

Laser Power and Ignition Safety

Investigations have shown that a particle or surface heated by radiation from a laser can ignite flammable gas or vapors through localized temperature increases or plasma formation. Industrial agency approvals (CE, CSA, FM, UL, and so on) require that laser manufacturers prove that their lasers are powered at below the minimum ignition energy (MIE) of common materials to eliminate ignition hazard. When specifying laser level sensors, engineers should ensure that the instruments have an agency rating for hazardous locations and/or the CE mark. These markings will indicate compliance with industrial requirements and minimize any potential problems in service. Consulting with the laser manufacturer for nonstandard applications is recommended.

SUMMARY

As laser technology develops, there exists a huge potential for laser level gauges to capture more of the noncontact level-monitoring market. In North America, there is now an annual shift away from contact gauges to noncontact gauges of 1 to 3%. This shift is the result of the development of better and newer technologies that continue to optimize processes from both a technical and economic standpoint. With their inherent advantages, laser level gauges are particularly well positioned to benefit greatly from this market shift and become even more common as a multipurpose industrial device.

Bibliography

Bonfig, K. W. u. a., Technische Füllstandmessung and Grenzstandkontrolle, *Expert Verlag,* 1990.

Fehrenback, J., *Instrument Engineers Handbook,* 3rd ed., 1994.

Food and Drug Administration, Center for Devices and Radiological Health, CFR 1040 and Laser Notice 50, July 2001.

International Electrotechnical Commission, Safety of Laser Products, IEC-60825, November 2001.

Kompa, G., Extended time sampling for accurate optical pulse reflection measurement in level control, *IEEC Trans. Instrum. Meas.*, 33, 1984.

Kompa, G., High resolution pulsed laser radar for contour mapping, in *Proc. 28th Midwest Symp. Circuits and Sys.*, August 1984, Louisville, KY, 527–530.

Kompa, G., Laser-Entfernungsmesser Hoher Genauigkeit für den Industriellen Einsatz, in *Proc. Laser 79 Opto-Electronics,* July 1979, Münich, 587–593.

Krüger, G., *Berührungslose Giesspiegelmessung mit LASER,* VDE-Berichte, 509, 1984.

Lewis, R. A. and Jonston, A. R., A scanning laser rangefinder for a robotic vehicle, in *Proc. 5th International Joint Conference on Artificial Intelligence,* Cambridge, SPIE Press, Bellingham, WA, 1977.

Loughlin, C., Distance sensing; making light work, *Sensor Review,* 9, 3, 1989.

Manhart, S. and Dyrna, P., Self-Calibration Low Power Laser Rangefinder for Space Applications, SPIE 663, SPIE, Bellingham, WA, 115–121, 1986.

Schwarte, R., Performance capabilities of laser ranging sensors, in *Proc. ESA Workshop on Space Laser Applications and Technology,* Les Diablerets, ESA SP 202, May 1984, 61–67.

Schwarte, R., Baumgarten, V., Bundschuh, B., Dänel, R., Graf, W., Hartmann, K., Heuten, F. and Loffeld, G., Implementation of an advanced laser ranging concept, *IAF,* October 1985.

Ussyshkin, V. R., Laser Safety Ignition, Research Results for AccuPulse PRO Level Monitor, September 2001.

© 2003 by Béla Lipták

3.10 Level Gauges, Including Magnetic

D. S. KAYSER (1982) **B. G. LIPTÁK** (1969, 1995) **D. S. NYCE** (2003)

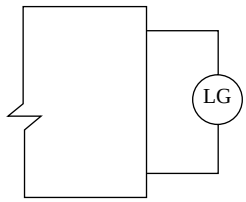

Flow Sheet Symbol

Types

(A) tubular, (B) circular or bull's-eye, (C) transparent, (D) reflex, (E) magnetic, (F) magnetostrictive transducer, and (G) gauge glass.

Design Pressure

Maximum pressures for tubular glass gauges range from 1 to 20 bars (0.1 to 2.0 MPa), but caution is needed for applications above 1 bar; circular gauges, 200 bars, with bull's-eye units up to 690 bars; transparent flat glass gauges, 200 bars; reflex gauges, 250 bars; armored gauges, 400 bars; and magnetic level gauges, 300 bars. Maximum operating pressure depends on maximum temperature. (Note: 1 bar = 0.1 MPa = 14.5 PSI.)

Design Temperature

Maximum operating temperature for tubular glass gauges is 80 to 200°C (176 to 400°F); circular gauges, 250°C (480°F); transparent flat glass gauges, 300°C (570°F); reflex gauges, 300°C (570°F); armored gauges, 350°C (660°F). Magnetic level gauges can handle process temperatures ranging from –196 to 400°C (–320 to 750°F). For all types with gauge glass, maximum operating temperature depends on maximum pressure and gauge length.

Materials of Construction

Transparent elements are of prestressed borosilicate glass, aluminosilicate glass, or quartz; other components may be carbon steel, stainless steel, K-monel®, Hastelloy®C®, PVDF (Kynar®), PTFE (Teflon®), PVC, and others for special applications.

Range

Tubular glass gauges are usually limited to 1 m maximum indicated length. The length per section for a flat glass transparent gauge (multiple sections can be arranged for a larger combined length) ranges from 100 to 500 mm; reflex, 100 to 500 mm; armored gauge, 250 to 500 mm; magnetic, 250 mm to 3 m.

Inaccuracy

Gauge error is usually a factor of the resolution of graduations on the scale, if provided. The readability can be degraded by foaming, boiling, and other effects that alter density or reduce visibility. The resolution of magnetic flag indicators is controlled by the spacing of the individual flags, typically about 6 mm. Magnetic gauges fitted with magnetostrictive sensor-based indicators can resolve the float position to 0.1 mm or less.

Cost

Excluding pipe stands, fittings, accessories, and so on, the cost per 300 mm (≈1 ft) of various gauge types is as follows: tubular glass gauge, $100; transparent glass gauge, $400; reflex, $300; armored, $450; magnetic, $1500. A circular (welding pad) gauge costs about $100 to $500.

Suppliers

Barksdale GmbH (www.barksdale.de) (E)
Clark Reliance Corp./Jerguson (www.clark-reliance.com) (A, B, C, D, E, F)
Essex Brass Co. (www.essexbrass.com) (A)
Gems Sensors Inc. (www.gemssensors.com) (E)
Jogler (www.jogler.com) (AEF)
John C. Ernst Co. (www.johnernst.com) (A, B, E)
Klinger (www.klinger.com.au) (A, C, D, E)
Kobold Instruments Inc. (www.koboldusa.com) (E, F)
K-Tek Corp. (www.ktekcorp.com) (E, F)
L.J. Star Inc. (www.ljstar.com) (B)

© 2003 by Béla Lipták

Magnetrol International (www.magnetrol.com) (E)
MTS Systems Corporation (www.levelplus.com) (F)
Oil-Rite Corp. (www.oilrite.com) (A, B, G)
Penberthy (www.penberthy-online.com) (A, B, C, D, E, F)
Schott Auer GmbH (www.schott.com) (G)
Spectraglass Ltd. (www.spectraglass.co.uk) (G)
Wooil Industries (www.wooilind.com) (C, D, G)

INTRODUCTION

Many types of devices are called level gauges, including various transducers, sensors, transmitters, and indicators. The detection methods depend on properties such as head pressure, differential head pressure, conductivity, and capacitance, and they employ optical, microwave, RF, radiation, magnetostriction, ultrasonic, and other principles. This section of the handbook, however, deals with liquid level gauges that operate by connecting a measuring chamber in parallel to the vessel being monitored so as to directly indicate the level visually or by the use of a magnetic indicator or transducer. The configurations of glass-type gauges comprise tubular glass, flat glass-transparent (circular and long-form), reflex, armored, and magnetic gauges. The level in the gauge follows the level in the vessel, as illustrated in Figure 3.10a.

The process level is directly visible in a glass gauge. Conversely, in a magnetic level gauge, the measuring chamber can be opaque and is typically constructed fully of metal. A float within the measuring chamber of a magnetic gauge floats on the liquid and incorporates a permanent magnet. The float magnet drives an indicator or transducer through magnetic coupling as shown in Figure 3.10b. Local indication from the magnetic level gauge can be implemented through the use of a magnetic follower, magnet operated flags, or with magnetic switches or a magnetostrictive transducer.

Level gauges are often used in process vessels as well as storage vessels. In level gauges providing direct visual indication, the accuracy is limited by the readability of the meniscus of the liquid in the indicating area of the gauge. The readability can be reduced when monitoring foaming, boiling, or inhomogeneous liquids. On visible glass lengths in excess of ≈300 mm, multiple gauge covers are stacked along the length of the measuring chamber. If a single chamber is used with multiple covers as described, there are small spaces over which the view of the level is blocked by the top and bottom edges of the individual gauge covers. In magnetic gauges with a magnetostrictive transducer,

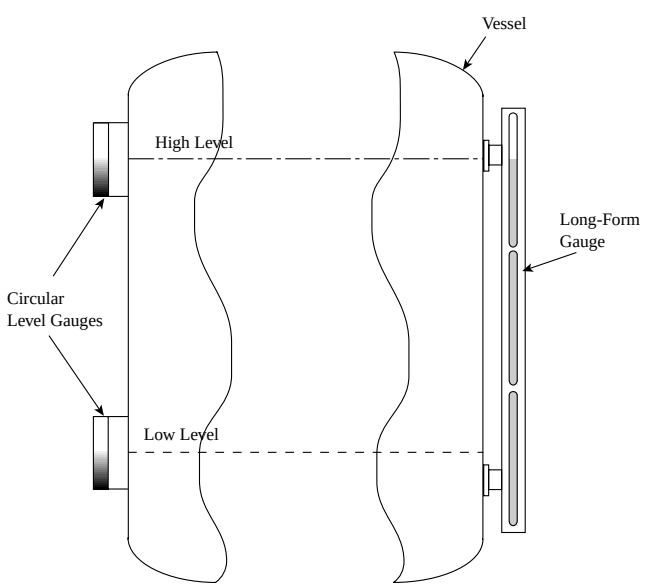

FIG. 3.10a
A level gauge (on right) is mounted in parallel to the vessel, extending over the range of level to be indicated. A circular gauge is mounted at the level of interest (left).

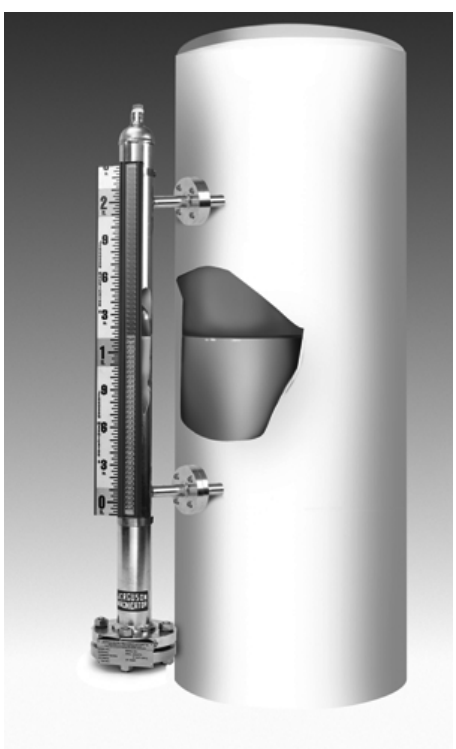

FIG. 3.10b
A magnetic gauge is shown mounted to a process vessel. A float within the measuring chamber floats on the liquid. A magnet within the float operates the magnetic flags to indicate the level. (With permission from Clarke-Reliance.)

© 2003 by Béla Lipták

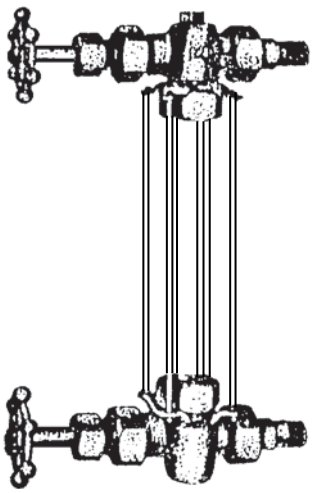

FIG. 3.10c
The traditional tubular glass level gauge is not recommended for most industrial applications.

improved accuracy is possible because of the high resolution that can be provided by a magnetostrictive transducer, and continuous indication is available through the entire range.

TUBULAR GLASS GAUGE

A simple tubular glass gauge (Figure 3.10c) comprises a transparent glass tube, seals, end blocks, and guard rods to protect the glass. It is positioned parallel to the vessel along the elevation over which the level is to be indicated and mounted with suitable fittings to retain the pressure as well as to seal the ends of the sight tube. This construction, however, is not well suited for use with dangerous process fluids.

An important consideration in gauge selection is that of maintaining the safety of personnel and associated equipment. The difficulty is evident when the process vessel, storage tank, pipeline, and so on are used with high-temperature, high-pressure, corrosive, or other dangerous fluids or steam. If a sight glass tube sustains a fracture of the glass or a leak at the seals, the dangerous fluid can escape and create the potential for a hazardous condition. The single tube design is not recommended for use with toxic materials, pressures above 1 bar (0.1 MPa or 14.5 PSIG), or temperatures above 100°C. Some tubular glass gauge designs have extra protection against breakage, an improvement on the simple guard rods of standard designs.

The protection elements may include an outer tube that contains the fluid if the inner tube is fractured, sheet metal protectors, and a wire glass protector surrounding the gauge glass. Even considering these improvements, it is recommended that flat glass, reflex, armored, and magnetic gauges be specified when the process includes hazardous materials, high temperatures, or high pressures.

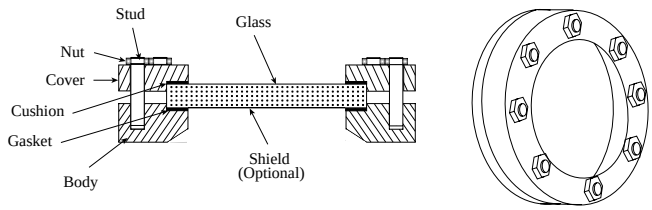

FIG. 3.10d
Construction of a circular gauge. Cutaway view (left) and side view (right).

CIRCULAR TRANSPARENT GAUGE

Circular level gauges (some small versions are also called *bull's-eye gauges*) are mounted next to the monitored vessel at the elevation of interest for level indication, as shown in Figure 3.10a. The circular gauge has a limited range and is used when the level variation that must be indicated is small. This type of gauge is typically constructed as shown in Figure 3.10d. The body, glass, and gasket are wetted by the process. A shield can be added to protect the glass from the process fluid if required.

Since circular gauges are used to indicate liquid level over a relatively short range, two or more can be used to show high and low levels, and other gauges can be used at selected locations in between. They can also be used to show fluid in motion and fluid color or contamination.

TRANSPARENT GAUGE (LONG FORM)

When monitoring levels over a wider range than is practical with a circular gauge, a long-form flat glass transparent gauge can be used. Typically, if a flat glass gauge is not specified as being circular, it is assumed to be long-form, and the term *long-form* is not added. The construction of a transparent gauge is shown in Figure 3.10e. The measuring chamber retains the fluid and accepts the glass and covers, which are secured with bolts. One or more vision slots are machined into the chamber to allow viewing of the level. Tie bars are areas that may be left (i.e., not machined out) in the vision slot so as to provide higher strength. Gasket material is compressed between the chamber and the glass to prevent direct contact and to provide a seal. Cushions are placed between the glass and the covers to prevent direct glass-to-metal contact. The chamber, glass, and gaskets are wetted by the process. Shields can be optionally installed to protect the glass from the process fluid and/or from the ambient environment (e.g., windblown sand).

The gauge is called *transparent* because there are glass panels both in front of and behind the measuring chamber, with respect to the observer who is reading the gauge. Accordingly, the liquid level indication is illuminated by light coming from behind. This configuration is useful to allow

© 2003 by Béla Lipták

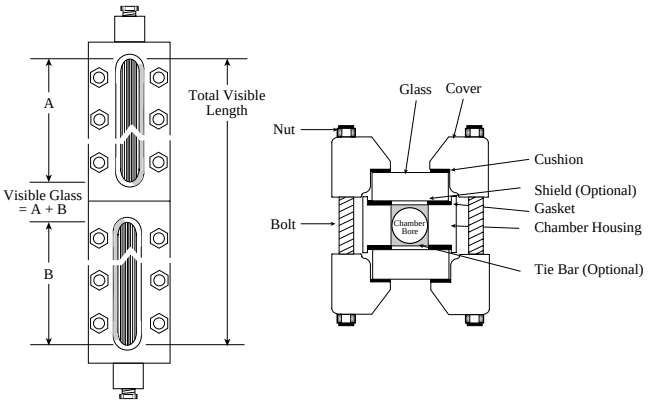

FIG. 3.10e

Transparent level gauge construction, front view (left), and cutaway view (right). The front view shows two covers attached to one chamber, and shows the distinction between visible length and visible glass.

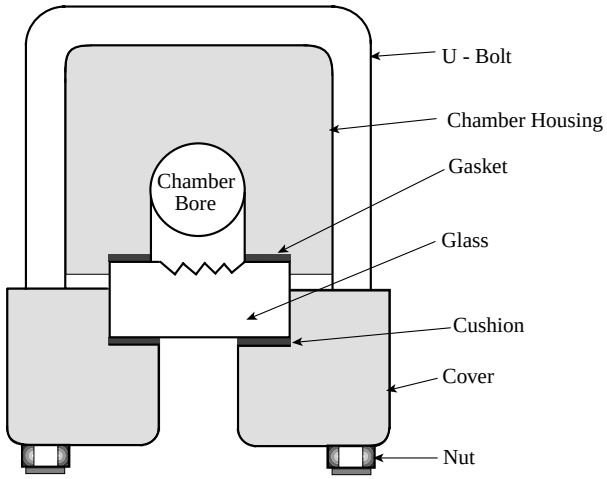

FIG. 3.10f

Construction of a reflex glass level gauge.

visual inspection of the liquid for color and presence of particles, for example, in addition to indicating the level. One drawback is that it requires the availability of some light from behind. Lighting panels (called *illuminators*) are available for providing this illumination when it is not available from the ambient lighting. Because of the process fluid viewing capability, transparent gauges can be used in applications that require the indication of the interface between two liquids.

As indicated in Figure 3.10e, the *total visible length* is the distance between the uppermost and lowermost possible reading positions. There may be some unreadable areas included, resulting from tie bars and top and bottom edges of covers. The *visible glass* is the sum of the lengths of unobstructed glass available for viewing.

REFLEX GAUGE

Greater visibility of the transition between the liquid level and the gas or vapor above it is provided by the reflex-type glass gauge. The construction, shown in Figure 3.10f, incorporates a glass element in front of the measuring chamber housing, but not behind it. Illumination is only from the front, and level visibility is aided through the use of grooves in the glass where it contacts the liquid being monitored.

The gauge glass is smooth on the outside (the side toward the observer). The grooved surface is called the *prismatic* area. The face of each groove is at a right angle to the faces of adjacent grooves. When the prismatic area *is not in contact* with a liquid, the groove faces reflect the incoming light. The light is reflected due to the large difference in the index of refraction between the glass and the gas or vapor above the liquid. The incoming light strikes one groove face, is reflected across to the adjacent groove face, and then is reflected back to the observer in front of the gauge (see Figure 3.10g).

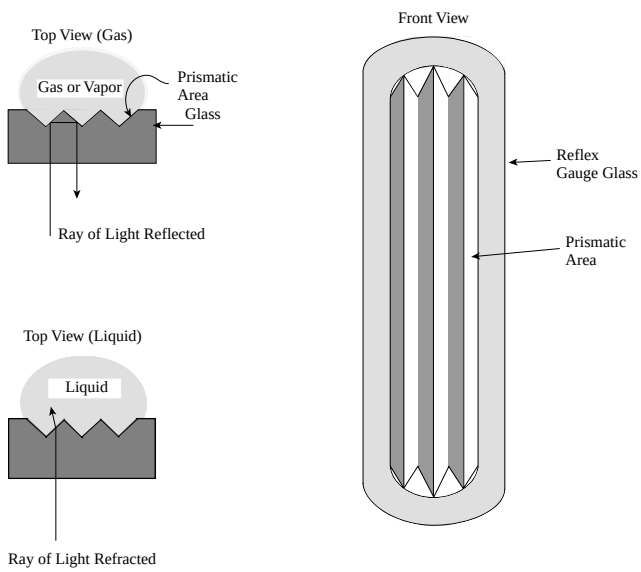

FIG. 3.10g

Light is directed back toward the observer in the gas or vapor space above the liquid in a reflex gauge (top, left). Where liquid touches the glass (bottom, left), light is not reflected. The figure on the right shows a gauge glass with grooves forming the prismatic area.

When the prismatic area *is in contact* with a liquid, there is little difference in the index of refraction between the glass and the liquid, so the light passes through the prismatic area at a slight angle (it is refracted) without being reflected back toward the observer. The combination of these two effects provides an improved visibility of the liquid and an increase in the distance over which the level indication can be viewed.

When viewing a transparent or semi-transparent liquid in a reflex gauge, the liquid will appear black or dark because

© 2003 by Béla Lipták

the light is not reflected back to the viewer from the prism area. The column above the liquid will appear silvery, because the light is reflected back from the glass-to-gas interface at the prism area (e.g., there will be a dark column below the indicated level and a silvery column above the indicated level). An opaque liquid will show its color in the liquid column area (e.g., milk will show a white column below the indicated level, with a silvery column above the indicated level). Because of the reflection of light back to the viewer, reflex gauges are well suited to viewing with a flashlight in low-light areas.

Because of the front illumination and the prismatic glass, reflex gauges are recommended for use only with clean, clear, process fluids and when there is no liquid–liquid interface to be viewed. Because of its irregular shape, shields cannot be installed against the prismatic glass, so corrosive fluid service is limited to those with little or no effect on the glass.

Armored Gauges

Since a gauge of standard construction provides for clamping of the glass between the cover and the measuring chamber, the edges of the glass may be exposed. In an armored gauge, a lip is formed into the cover, and it wraps around and covers the sides of the gauge glass. So, between the chamber and the cover, the edge of the gauge glass is completely covered. The purpose is to protect the glass from possible damage resulting from, for example, accidental impact from a wrench. The front of the cover is also made thick enough to prevent contact with the glass if the same wrench were to hit the front of the cover.

Armored gauges are also often made for extreme duty (e.g., vibration, high temperature, or high pressure). They utilize thicker glass and measuring chamber walls and higher-performance gaskets, and they may have shorter spans of visible glass separated by tie bars in the measuring chamber. They are often used in pressure vessels and where no electrical power is available to operate electronic level indicators. Many manufacturers supply only armored-style gauges.

Gauge Glass Materials

Borosilicate glass is the most common type of gauge glass. It has good chemical resistance up to about 300°C. In addition, transparent shields can be mounted between the glass and the process fluid to protect the glass from corrosive media in transparent level gauges (e.g., the shields can be made of mica or PCTFE).

Borosilicate glass is usually tempered to improve its resistance to thermal shock. The tempering process comprises the heating of the glass to the glassy transition point, followed by rapid cooling. This is done during manufacture of the glass to induce mechanical compressive stress in the outer layer, resulting in an increase in the ultimate tensile strength (UTS). The tensile strength is increased, because the compressive stresses must be offset by tensile stresses before cracks can propagate (cracking is required before breakage of the material).

Aluminosilicate glass has a lower coefficient of linear thermal expansion (also called t/c) than borosilicate glass, but it can be used at higher process temperatures of up to 425°C. While borosilicate glass has a t/c of 4.5×10^{-6}/°C, aluminosilicate glass has a coefficient of only 2.0×10^{-6}/°C. For comparison, the t/c of carbon steel is 23×10^{-6}/°C, and type 316 stainless steel (SS) is 17×10^{-6}/°C.

Quartz glass has the highest temperature rating (up to 530°C) and also has the lowest t/c (0.5×10^{-6}/°C). It can be used in transparent gauges but is not available in reflex gauges, because it would be difficult to form the grooves. The materials of construction other than quartz determine the maximum operating temperature of a quartz gauge assembly. Extremely flat gasket and cushion seating surfaces are required when using quartz glass to avoid bending and torsional or point stress. Belleville® spring washers are used to control the clamping forces between the glass and its seating area.

Fused natural quartz is made by melting naturally occurring crystalline silica. Synthetic fused quartz (or synthetically fused silica) is made by melting man-made silicon dioxide.

Design Features

It is typical for all glass level gauges to have a reduction in pressure rating as the temperature increases. Manufacturers list representative charts for general guidance in selecting the type of construction and components to meet the application requirements. Once the complete gauge model has been specified, including chamber model, glass type, shields, and so forth, it is important to verify with the manufacturer the resulting temperature vs. pressure curve for that particular configuration.

Transparent and reflex gauges are normally limited to a maximum single-gauge length of up to 1.5 m. If a greater total visible length is required, multiple gauges will have to be installed. Overlapping is suggested to allow viewing of levels that would otherwise be blocked by the top and bottom edges of the covers.

To reduce problems from boiling or foaming process fluids, a larger-diameter measuring chamber (approximately 50 mm) can be used as shown in the top row of gauge cross sections illustrated in Figure 3.10h.

In cryogenic service, the view of the level in standard glass gauges may be blocked by ice accumulation. A nonfrosting lens can be added that consists of a T-shaped plastic lens held against the glass by the cover and extending out in front of the glass. The plastic lens has a relatively low thermal conductivity and is not as cold on the front viewing surface as the face of the gauge glass, which reduces frosting.

Heating or cooling of the gauge may be required to keep it at approximately the same temperature as the process fluid in the vessel. The appropriate device may be added externally or mounted in the bore of the chamber.

© 2003 by Béla Lipták

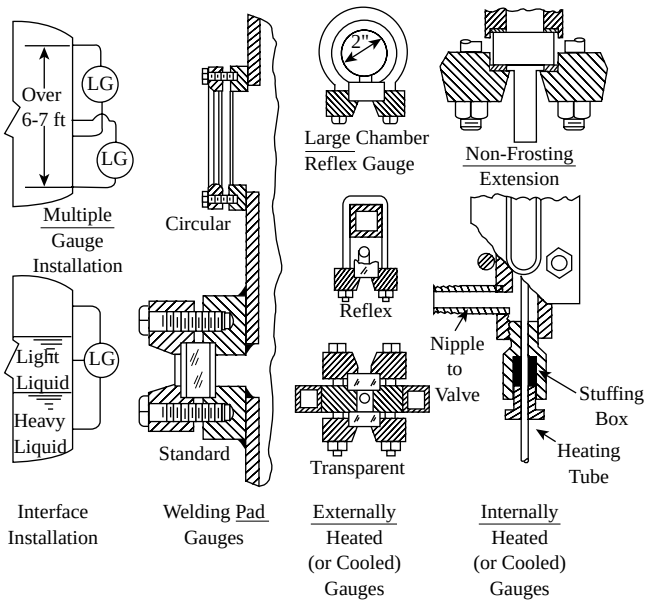

FIG. 3.10h
Special level gauge designs and cross sections.

GAUGING INACCURACIES

Gauge error usually depends on the resolution of graduations on the scale, if provided. Readability can be degraded by foaming, boiling, and other effects that alter density or reduce visibility. The indicated level can be affected by a difference between the temperature of the gauge and the vessel. If the gauge is cooler than the vessel, the liquid within the gauge may be more dense and therefore indicate low. This can be eliminated by using a heater on the gauge and controlling the gauge temperature to match the vessel temperature. Conversely, the gauge temperature can be reduced, if needed, by adding a cooler in a similar manner. Gauge heating/cooling configurations are shown in Figure 3.10h.

In a gauge with a magnetic follower, some error is due to the strong magnetic attraction required between the float magnet and the follower magnet, which induces friction on the walls between them. The resolution of magnetic flag indicators is controlled by the spacing of the individual indicator flags, typically about 6 mm. Magnetostrictive transducer-based indicators can resolve the float position to 0.1 mm or less and do not have a detectable magnetic attraction between the transducer and the float magnet.

Foaming or boiling can show false high readings because of an apparent lower specific gravity (SG) of the fluid in the gauge compared to the fluid in the vessel (if the vessel fluid has less foaming or boiling). This can be reduced by using a gauge with a larger chamber diameter, as was shown in Figure 3.10h.

Internal condensation can cause readings to become blurred. To prevent this, a heater can be added inside or outside the chamber.

ACCESSORIES

Gauge support brackets are used with long gauges, where the distance between supports is about 1.5 m or longer, to reduce the load placed on nipples and valves. Steel brackets are welded directly to the measuring chamber and then bolted to a support plate on the vessel. On a reflex gauge, the bracket can be welded to the back of the chamber (between sections to avoid interference with cover bolts). On a transparent gauge, suitable welding locations include the right or left side of the chamber, between sections. The brackets are normally welded on at the factory according to customer specifications.

Valves and fittings are also needed, of course, for the installation of level gauges. Fittings can be any of several types, including spherical union, flanged, socket weld, solid shank, or NPT union. Spherical unions allow correction of misalignment but may be difficult to seal if they are connected more than once.

Valves are normally factory assembled to the gauge. The fitting of unions to the vessel side of the gauge valve will facilitate the initial connection of the gauge. The gauge can be removed without depressurizing the vessel if valves are included on both the gauge and vessel sides of the unions. Gauge valves are normally supplied with ball checks to minimize venting to the atmosphere in case of breakage of a section of the gauge.

Teflon coating is a common requirement in the chemical processing industry. The Teflon can be applied by electrostatic spray or by wet spray. It often includes a base coat of PTFE followed by a top coat of PFA, with a minimum total thickness of 0.25 mm. Maximum service temperatures are up to 230°C. The user should specify whether the Teflon coating is required only for the wetted parts or for the complete gauge.

An illuminator can be used with transparent gauges to increase visibility in lower-light areas. A lamp is used with a diffuser to illuminate the entire visible glass area. Explosion-proof versions are available for use in hazardous areas.

Scales can be engraved or etched in the desired units and are attached to the gauge cover. If the installed scale does not accurately indicate the actual level in the vessel, a calibration can be undertaken. The calibration data can be used to derive a conversion factor between the indicated reading and the actual vessel volume.

APPLICATION-SPECIFIC REQUIREMENTS

Low-temperature applications require specific attention to gauge materials. Some materials, particularly ferritic steels, change from their normally tough property to a more brittle behavior with a decrease in temperature. The transition temperatures and toughness vary with different materials. When materials are used under conditions in which brittle behavior

© 2003 by Béla Lipták

may occur, there is a potential that minor internal flaws, which would not present a problem if the material were sufficiently tough, may propagate to failure (see ASTM A352 supplements[1] for more information).

Boiler and steam/water gauges must be reliable to ensure the safety of personnel and equipment. High pressures and temperatures require attention to the specification and application of all parts and materials of the gauge, valves, and fittings. Saturated steam tables should be consulted to ensure that the operating pressure and temperature for the application are within the range shown in the tables provided by the gauge manufacturer. Standard glass level gauges may not be suitable for use with steam. Check with the manufacturer of the gauge to find out which models are specifically suited for use with steam at the vessel design pressure/temperature ranges. Shields (usually mica) should be used to protect against etching of the glass (the etching is also called *frosting*, but this is different from frosting due to accumulation of ice in cryogenic systems). Transparent gauges are used because shields cannot be applied to the prismatic surface of reflex glass. For more information on boiler equipment installation requirements, consult the ASME Boiler and Pressure Vessel Code, as well as codes that are specific to the locality in which the equipment will be installed.

Hydrofluoric acid applications require special materials to prevent attack of the gauge glass by the acid. Hydrogen fluoride (HF) is an extremely corrosive gas that becomes hydrofluoric acid in solution with water. Like many acids, it vigorously attacks most metals but also attacks glass and other silica-containing materials. Some fluorinated polymers are designed to protect against hydrofluoric acid, including PCTFE (Kel-F®), ETFE (Tefzel®), and PECTFE (Halar®). Metals used with HF can be Hastelloy®C up to 90°C or K-Monel®.

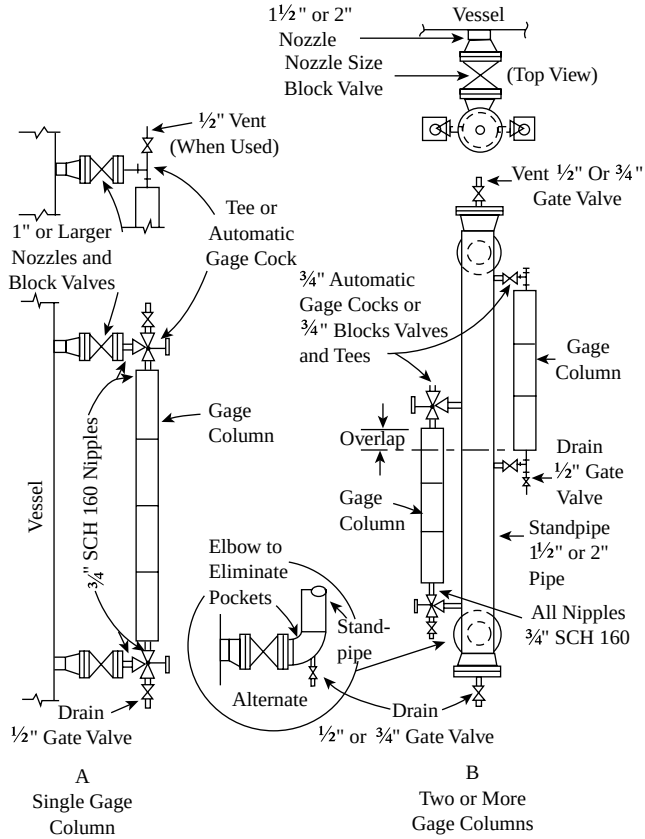

FIG. 3.10i
A gauge column (left) may incorporate several gauge glass and covers on one chamber. A standpipe (right) allows more flexibility.

INSTALLATION

The level gauge(s) should be installed so that the full operating range can be observed, including levels found during warm-up and cool-down, and as indicated by switches, displacers, and so on. For multiple gauges, overlap their elevations so the complete range of levels can be seen without the view being blocked by the top and bottom edges of the covers. As shown in Figure 3.10i, this can be done by installing single section gauges on a standpipe. Using a standpipe also can reduce the number of vessel connections and increase the flexibility in the mounting and positioning of the gauges.

To obtain the lowest error when viewing a liquid–liquid interface, add a central connection to the vessel in the area of the lighter liquid phase, in addition to the top and bottom connections. This will prevent errors due to an excessive column height of the light phase when the top level of the light phase is below the upper connection (bottom-left area of Figure 3.10h).

An expansion loop can be added to gauges that will operate over a wide temperature range to allow for differences in the coefficient of thermal expansion between the gauge and the vessel (see Figure 3.10j). An expansion loop is also particularly useful in cases where the gauge can be valved off and allowed to cool, while the vessel is still hot.

MAGNETIC LEVEL GAUGES

Because the magnetic level gauge does not require direct viewing of the level (i.e., there is no need for glass), the measuring chamber can be opaque, and welded metal construction is normally used. This substantially widens the operating temperature range and increases the ruggedness as compared to chambers using gauge glass. The wide temperature range is possible, because the measuring chamber can have approximately the same coefficient of thermal expansion as the vessel, and there is no glass (which would have a lower t/c) to interface with the metal chamber.

© 2003 by Béla Lipták

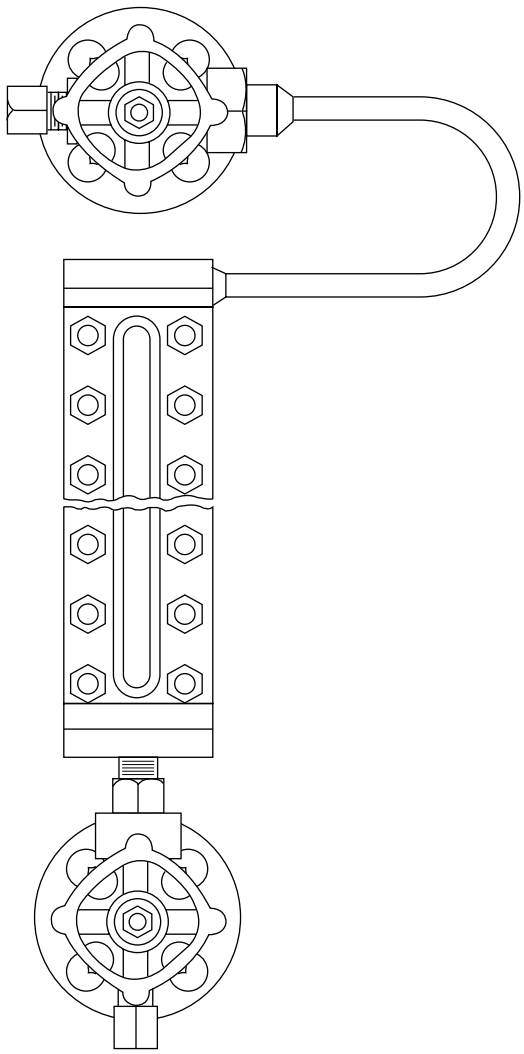

FIG. 3.10j
Installing an expansion loop improves reliability over a wide temperature range.

To allow the magnetic system to operate properly, the chamber metal must be of a nonmagnetic type—usually an austenitic stainless steel such as AISI 316 SS.

Because the float in the chamber of a magnetic gauge incorporates a permanent magnet, any reliable method of detecting the location of a magnetic field can be used to show the location of the float and, thus, the level. Three common methods of indicating the float position are the magnetic follower, magnet-operated flags, and magnetostrictive linear position transducers (also called *magnetostrictive transducers*).

Magnetically operated reed switches may require maintenance and lack the long-term reliability needed for many industrial applications. Therefore, they are not presented here.

One limitation in magnetic gauges is that the float must have a comparatively thick wall to operate at higher pressures. Due to the related weight, it is more difficult to measure process fluids of low SG (e.g., less than 0.45) when the pressure is high (e.g., over 200 bars/20 MPa).

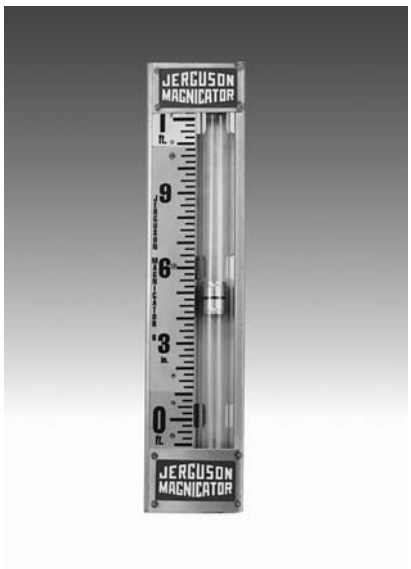

FIG. 3.10k
This magnetic follower can be mounted alongside the measuring chamber of a magnetic level gauge to indicate the float position. (With permission from Clarke-Reliance.)

Magnetic Followers and Indicators

Magnetic followers and magnetic flag indicators are mounted alongside the measuring chamber of a magnetic gauge. A magnetic follower is shown in Figure 3.10k. A magnetic flag indicator was shown in Figure 3.10b. A permanent magnet inside of the float (within the measuring chamber) lines up with the follower or adjacent flag as the float slides up or down the measuring chamber. In the case of the follower, the position of the follower is read against a scale. Friction of the follower against the adjacent wall is substantial because of the magnetic attraction between the magnet in the follower and the magnet in the float. This causes an additional limitation on resolution, which is observable as a discontinuous motion of the follower in response to level changes.

With magnet-operated flags, the magnet in each flag causes it to flip one way as the float passes while moving upward and flip the other way as the float passes while moving downward. The flags can be colored red and white, for example, to show a red line from the bottom of the indicator up to the indicated level and a white line above that. Red, orange, and yellow are often used, because they are highly visible. Fluorescent colors are good, because they are more easily read when using a flashlight.

Some limitations include an occasional flag flipping the wrong way and coarse resolution of ≈6 mm. An incorrect flag position is sometimes caused by the float bobbing up and down or by rapid movement of the level. The flag position can be corrected by passing a magnet along it externally. If the actual float position is in question, it can be found by using a compass and watching the needle movement.

© 2003 by Béla Lipták

The resolution of the flag indicators is limited by the spacing of the magnetic flags and somewhat by the friction of the float against the measuring chamber wall resulting from the attraction between the magnets in the flags and the magnet in the float.

Magnetostrictive Transducers

Magnetostrictive transducers and associated indicators represent an improvement in the state of the art in level gauges. They can increase the effectiveness of installed magnetic gauges having followers or flags, or they can stand alone in new installations for accurate level gauging without the associated limitations of using glass gauges. The original loop-powered magnetostrictive transducer was invented and developed in 1990 by the author.[2] Magnetostrictive transducers are now available from several manufacturers.

A magnetostrictive transducer is a linear device that can detect the location of a magnetic field (provided by the position magnet) that moves along in parallel to the sensing probe of the transducer (see Figure 3.10l). When used with a magnetic level gauge, the magnet within the float acts as the position magnet. A magnetostrictive transducer can be added to a follower or flag-type gauge, but it exhibits the highest performance when used with a simple nonmagnetic metal tube (such as type 316 stainless steel) that contains a float/magnet assembly.

The primary component inside of a magnetostrictive transducer is called the *waveguide* (see Figure 3.10m). When a current pulse (called the *interrogation pulse*) is applied to the waveguide circuit, a torsional force is induced into the waveguide at the location of the position magnet. This phenomenon is called the *Wiedemann effect*. Also, a timer circuit is initiated when the interrogation pulse is applied.

The torsional force causes formation of a strain wave that travels at the "speed of sound" in the waveguide material (≈2850 m/sec). When the strain wave arrives at the pickup, it is detected, and the timer is stopped. The elapsed time measured by the timer indicates the location of the position magnet. The time is converted into the desired output signal, usually 4 to 20 mA or a digital communication protocol.

Because the diameter of the waveguide is small (less than 0.5 mm), there is no detectable attraction between it and the magnet within the float, and hence there is no float friction due to magnetic attraction against the chamber wall. This is one reason why the resolution and accuracy can be better than indicated by a follower or flag indicator. The other reason is that a magnetostrictive transducer can resolve as small a position difference as a few microns, but indication resolution is limited by the float system to about 0.1 mm.

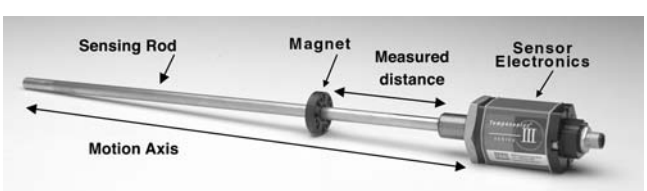

FIG. 3.10l
A magnetostrictive transducer measures the location of a magnet, called the position magnet. (Courtesy MTS Systems Corporation.)

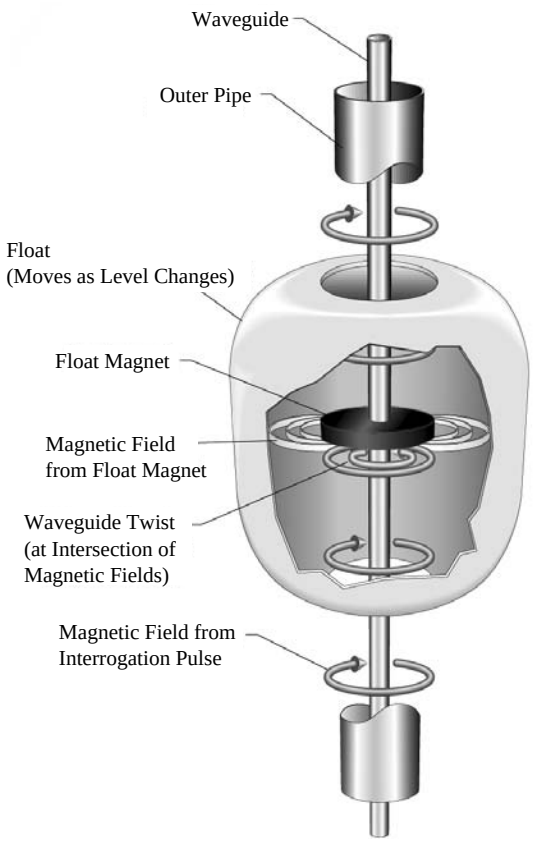

FIG. 3.10m
A torsional strain wave (waveguide twist) travels along the waveguide of a magnetostrictive transducer. The wave starts at the location of the float magnet, and its travel time to one end of the waveguide is measured.

Figure 3.10n shows the application of a magnetostrictive transducer to a magnetic level gauge. The transducer output can be indicated locally or remotely, on a stand-alone indicator, or as an input to a computer or data acquisition system or other device.

REMOTE READING GAUGES

Several schemes for remote reading gauges have been employed for high-pressure and high-temperature applications of up to 3000 PSIG (20 MPa) and 371°C. Remote reading gauges are often needed to meet the requirements of steam boiler codes. Differential pressure, conductivity probe, and circular gauge glass configurations have been used in the past. However, since the mid-1990s, the remote reading capability of a magnetic gauge with magnetostrictive transducer has become a preferred method to consider when power is available for operation of the transducer.

© 2003 by Béla Lipták



FIG. 3.10n
A magnetostrictive transducer is shown mounted to the right side of a magnetic level gauge with a flag indicator. (With permission from Clarke-Reliance.)

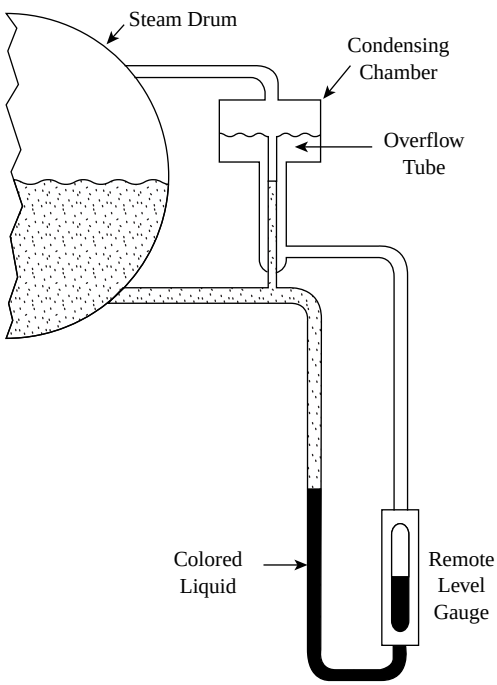

FIG. 3.10o
A differential pressure type of remote reading level gauge is useful when there is no power available.

Differential Pressure

A *differential-pressure* remote reading gauge is shown in Figure 3.10o. The maximum level is fixed by the elevation of the overflow tube in the condensing chamber. The actual level is obtained by measuring the difference in hydraulic head between the level in the chamber and the level in the overflow tube, the latter being equal to the level in the steam drum. The legs are connected to a manometer assembly filled with a colored liquid that is insoluble in water. A transparent gauge is used as a portion of the manometer and located so that the colored liquid in the gauge will rise as the level in the steam drum rises. For accurate level indication, it is important to keep both legs of the system at the same temperature. Also, when specifying this type of gauge, it is important to specify the pressure of the steam drum, because the water in the steam drum may contain bubbles of steam and thus have a significantly lower specific gravity than that in the gauge. This arrangement is useful in applications where power is not available.

Conductivity

A *conductivity probe* configuration was sometimes used in boiler systems and composed of a metal chamber with a series of conductivity probes. As the water rose in the chamber, successive probes energized their associated switches and relays. This arrangement had the safety advantage of not requiring a gauge glass, but its complexity was a disadvantage, and its long-term reliability was not as high as that of magnetostrictive transducers now available. It also required power for operation of the conductivity switches, relays, and indicator lights. The electrodes of the conductivity probes were subject to corrosion and routine replacement, and resolution was limited by the spacing of the conductivity sensing electrodes. This method is not recommended for new installations.

Circular Gauges

Circular gauges and closed-circuit television monitoring have also been used for remote indication; but again, the complexity, coarse resolution, and long-term reliability have no advantage over the currently preferred magnetic gauge with magnetostrictive transducer for remote reading. These methods also required power for operation of the light sources and video monitor.

Magnetostrictive Transducers

Magnetostrictive transducers used with magnetic gauges now constitute a preferred method of remote indication in applications where power is available for operation of the transmitter (see Figure 3.10n). The measuring chamber is normally a metal tube containing a float that rides on the liquid level so that the center of the float is even with the level. If there is a liquid–liquid interface, a float can be weighted to sink through the lighter liquid and float so that its center is at the interface level. It is also possible to use two floats, the first one riding at a liquid–liquid interface (indicating the level of the heavier phase) and the second one floating on and indicating the level of the lighter phase.

© 2003 by Béla Lipták

Although power must be provided to operate the magnetostrictive transducer, the advantages of this arrangement over other remote indicator types include increased safety (because no gauge glass is needed), a lack of parts that need recalibration or replacement, and obtainable resolution of better than 1 mm. A wide range of electronic remote indicators are available. The electronic output signal can be directly read by current-loop-compatible indicators and other equipment or fed to data acquisition systems or computers.

CONCLUSION

The various types of glass level gauges provide a means to view the liquid level as well as the color and possible contamination of the liquid. For accurate level indication, foaming and boiling must be minimized. The process fluid in the gauge should be at the same temperature (and density) as that in the vessel. Tubular glass gauges are not recommended for hazardous applications such as toxic liquids, high temperature, and high pressure. Magnetic level gauges can provide a higher safety margin when direct viewing of the liquid is not required. Magnetic level gauges with magnetostrictive transmitters yield the lowest errors, where power is available, at a higher cost. They also provide easy means for remote indication and communication interface to data acquisition systems and computers.

References

1. Penberthy application report 2780, November 2000.
2. U.S. patent number 5,070,485, 1991.

Bibliography

API Recommended Practice 550, *Manual on Installation of Refinery Instruments and Control Systems*, Part I, Process Instrumentation and Control, Section 2, Level, American Petroleum Institute, Washington, DC.

Cantieri, W. F., Water Gauge Accuracy, Technical Publication of the Diamond Power Specialty Co., Malvern, PA.

Cho, C. H., *Measurement and Control of Liquid Level*, ISA, Research Triangle Park, NC, 1982.

Green, C. R., Tank sight glasses, *Chemical Eng.*, September 25, 1978.

Lerner, J., Continuous level measurement: an introduction to 16 basic types, *Control*, November 1990.

Level measurement and control, *Meas. Control*, April 1991.

Nyce, D. S., Tank gauging advances, *Fuel Technol. Manage.*, January 1997.

Nyce, D. S., Magnetostrictive linear position sensors, *Fluid Power J.*, April 1999.

Penberthy Application Report 2000, No. 2781, August 1998; and No. 2783.1, August 1997.

© 2003 by Béla Lipták

3.11 Microwave Level Switches

J. L. DANIEWICZ (1995) **W. H. BOYES** (2003)

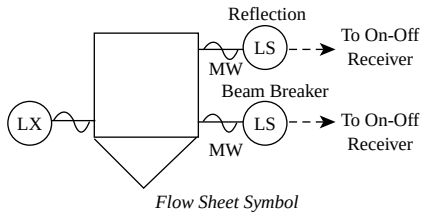

Flow Sheet Symbol

Applications	Microwave level switches can be used on liquids and small-particle-size solids if they are noncoating and have a dielectric greater than 10; they are suited for interface as well. The reflection switch is also suited for interface. The reflection switch is suited for denser material; the beam breaker switch is not limited by density or particle size, but it is limited by vessel diameter.
Design Pressure	Up to 400 PSIG (275 kPa) for reflection type; depends on vessel window for beam-breaker type
Design Temperature	Up to 400°F (200°C) for reflection type; depends on vessel window for beam-breaker type (up to 600°F [300°C])
Wetted Materials of Construction	TFE, polyphenylene sulfide, or ceramic as standard for reflection type; firebrick, plastic, unleaded glass, quartz, or mica window for beam-breaker type
Range	Immediate proximity for reflection type; up to 100 ft (30 m) horizontal transmission in air for beam-breaker type
Inaccuracy	0.125 in. (3 mm) for reflection type; ±0.25 to 0.5 in. (6 to 13 mm) for beam-breaker type
Cost	$400 to $1200 for beam-breaker type (cost may vary according to cost of transmission window and material)
Partial List of Suppliers	Reflection type: WADECO Ltd. (www.wadeco.co.jp) Beam-breaker type: Delavan Process Instrumentation Div. of L & J Technologies (www.landj.com) (X-band) STI (www.sti.com) (K-band) Insatech (www.insatech.com) WADECO Ltd. (www.wadeco.co.jp)

This section discusses the use of side-mounted microwave level switches that are used in hard-to-handle solid, liquid–solids interface, and liquid–liquid interface applications. Top-mounted microwave detectors that use the radar technique for continuous level measurement on liquid applications are covered in Section 3.13. Microwave level switches were briefly popular in the early 1990s as a replacement for RF switches and gamma nuclear point level switches. However, due to instability and erratic operation, most manufacturers have ceased making them. There is no current U.S.-based manufacturer of reflection-type microwave point level switches, but the information is included for historical purposes. Typically, the beam-breaker switches are used in solids applications, although they can be used in liquids.

Microwave level detectors use electromagnetic radio waves, typically in either the microwave X-band, around 10 GHz, or the microwave K-band, around 24 GHz. Because these are short-range measurements, emissions are at very low power levels ranging from 0.6 to 32 mW/in.^{2} (0.1 to 5 mW/cm^2). At these energy levels, health, safety, licensing, and product contamination concerns are minimal, and only solid-state diodes (instead of tubes) are needed to generate and detect the microwaves.

Microwaves do not pass through metal walls, but they do pass through fiberglass or plastic tank walls and through windows of plastic, ceramic, or glass that are installed in metal vessel walls. As long as the window material has a relatively low dielectric constant (e.g., less than 4.0), and as long as its thickness is close to an *even multiple* of a half wavelength, attenuation is minimal. (Wavelength can be calculated by dividing the wavelength in a vacuum by the square root of the window material's dielectric constant.)

© 2003 by Béla Lipták

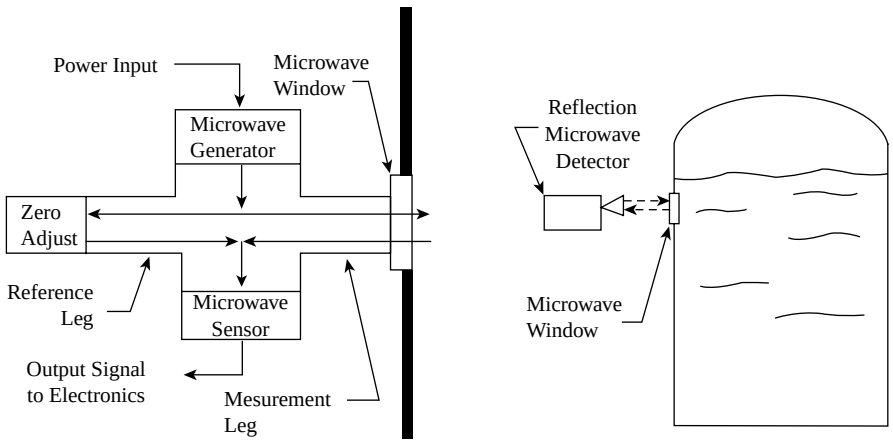

FIG. 3.11a
Reflection detector with balanced bridge (patented).

This permits the use of thick windows to withstand heavy abrasion on solids service and to isolate the sensor from hazardous and toxic liquids on high-pressure service.

Another advantage of the microwave technique is that the presence of dust, mist, or nonmetallic foam has negligible effect. The dielectric constant of these compositions is essentially the same air; therefore, their beam reflection and transmission characteristics are similar to those of free space. They appear to be somewhat product and installation sensitive, however, so it is recommended that the engineer be mindful of that fact when specifying one of these switches.

REFLECTION SWITCHES

There is currently only one manufacturer of this type of switch. Several manufacturers use this technique, but it is used for flow/no-flow sensing instead of level sensing. The sensors are quite similar, however, and the information is furnished for completeness.

This type of detector, shown in Fig. 3.11a, uses changes in the amplitude and/or phase of the reflected signal to determine material presence. Reflection is proportional to the dielectric constant of the material immediately next to the process window, as shown in Fig. 3.11b. Air, other gases, and foam have a low dielectric constant and return little or no signal. Materials with high dielectric constants, such as water, tend to return almost the entire signal.

One type of reflection detector, shown in Fig. 3.11a, compares the return signal to a reference signal in a balanced bridge circuit to provide additional sensitivity. This helps the detector to recognize low-dielectric materials such as plastic pellets (dielectric of 1.1), and it is useful for liquid–liquid interface and liquid–solid interface detection on materials that have a little as 0.1 difference in dielectric constant.

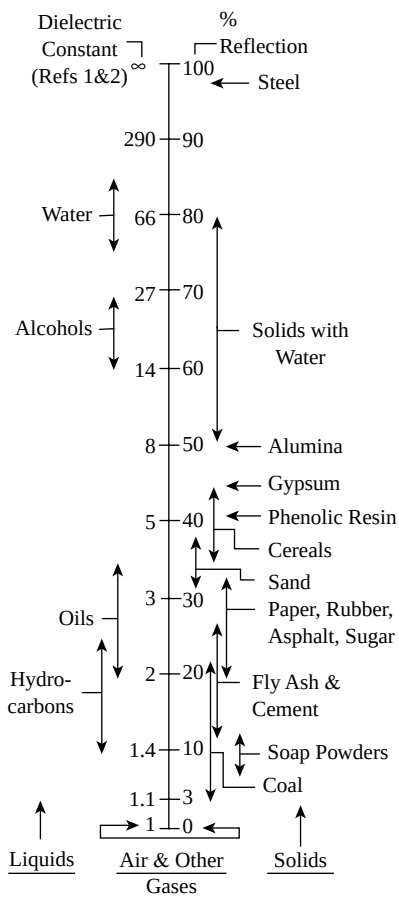

FIG. 3.11b
Microwave reflection characteristics.

On solid applications, the reflection technique is limited to detecting particles with diameters less than 0.25 in. (6 mm) for an X-band detector and to 0.1 in. (2.5 mm) for a K-band detector. Above this size, the particles begin to scatter the

© 2003 by Béla Lipták

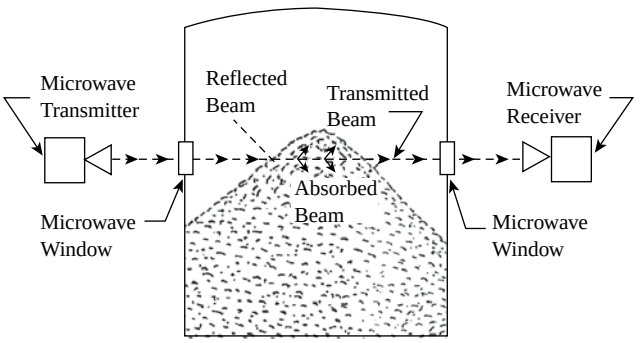

FIG. 3.11c
Beam-breaker detector.

beam and reduce the amount of signal that is reflected directly back to the detector.

BEAM-BREAKER SWITCH

This type of a detector sends a beam across the measurement zone, as shown in Fig. 3.11c. When air or vapor is in this zone, a strong signal is received at the detector. When process material breaks the beam path, it reduces the signal received at the detector as a result of signal reflection and beam absorption in the material caused by molecular and ionic resonances.

Beam-breaker detectors are very small antennas, so the beam's included angle is fairly wide: about 26° for K-band and 50° for X-band. Thus, alignment is not critical. Although signal amplitude falls off rapidly in proportion to the square of the distance, separation distance can still be up to 100 ft (30 m), which is considerably greater than with ultrasonic or nuclear approaches.

On solids services, the detector will not provide repeatable performance if it is expected to detect the top of the solids pile in the tank. Its switching action will be repeatable when the transmitter and receiver are both covered by solids at the time of switching.

COATING EFFECTS

Microwave devices can tolerate more coating than ultrasonic or laser units but less than radiation-type level switches. The amount of coating that microwave switches can tolerate is a function of their frequency band (K or X) and of the nature of the coating (conductive or nonconductive). The maximum coating thickness that can be tolerated is given in Table 3.11d.

TABLE 3.11d
Maximum Coating That Can Be Tolerated by Microwave-Type Level Switches

Microwave Frequency Band	*Maximum Coating Thickness*	
	Conductive Coating (e.g., water-based)	*Nonconductive Coating (e.g., hydrocarbon-based)*
X	.125 in. (.3 cm)	1 in. (2.5 cm)
K	.06 in. (.16 cm)	.5 in (1.25 cm)

CONCLUSION

Because of their expense, both types of level switches should be considered primarily for the more difficult applications or where a nonintrusive measurement provides major advantages. The beam-breaker type is the more expensive, as it requires two devices to be installed along with separate windows on metal vessels. However, because it can detect large solid particles, and because windows can be selected that are both thick and abrasion resistant, the beam-breaker technique is useful for detecting large and abrasive materials such as coal, minerals, wood chips, and vegetable pulp. It is also useful for detecting very light materials such as dry sawdust and powdered materials in fluidized beds, especially with the K-band design, which is more easily attenuated. Microwave level switches can be useful on granular solids and powders such as limestone, carbon black, and pelletized materials. In such applications, they have advantages in terms of abrasion and coating resistance as well as having no mechanical parts in the vessel that can be broken or pulled off. They should also be considered on difficult-to-handle liquids that are viscous, toxic, or hazardous because the detector is isolated from the vessel contents. The reflection-type microwave switch is also sensitive to liquid–liquid and liquid–solid interfaces.

References

1. *Microwave Position and Level Control,* Delavan Division of L & J Technologies, Hillside, IL, 1994.
2. Boyles, W. H., *Instrumentation Reference Book,* 3rd ed., Butterworth-Heinemann, Woburn, MA, 2002.
3. *Handbook of Chemistry and Physics,* 63rd ed., CRC Press, Boca Raton, FL, 1982.
4. Kaye, G. W. C., *Table of Physical and Chemical Constants and Some Mathematical Functions,* 15th ed., Longman, New York, 1986.

Bibliography

Lang, H. et al., Smart transmitters using microwave pulses to measure level, ISA Technical Conference, Chicago, September l993.
Ramo, S., Whinnery, J. R. and Van Duzer, T., *Fields and Waves in Communication Electronics,* John Wiley & Sons, New York, l965.

© 2003 by Béla Lipták

3.12 Optical Level Devices

D. S. KAYSER (1982) **B. G. LIPTÁK** (1995, 2003)

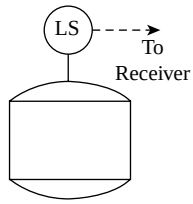

Flow Sheet Symbol

Types	Visible or infrared (IR) light reflection. Noncontacting type, usually for solids. Laser type (discussed in Section 3.9) is used for solids and molten glass. Light transmission designs are usually for sludge level, while light refraction is for clean liquid level services. Fiber optic probes of various designs for many applications are discussed in Section 8.23.
Applications	Point sensor probes for liquid, sludge, or solids (some continuous detectors also available)
Design Pressure	Up to 150 PSIG (10.3 bars) with polypropylene, polysulfone, PVDF, or Teflon®, and up to 500 PSIG (35 bars) with stainless-steel probes
Design Temperature	Between 150 and 200°F (66 to 93°C) with plastic probes and up to 260°F (126°C) with stainless-steel probes
Materials of Construction	Quartz reflectors with Viton® A or Rulon® seals, mounted in polypropylene, polysulfone, Teflon®, polyvinyl fluoride, phenolic, aluminum, or stainless-steel probes
Housings	Can be integral with the probe or remote. Explosion-proof enclosures and intrinsically safe probes are both available. With remote electronics, the fiber optic cable can be from 50 to 250 ft (15 to 76 m) long.
Dimensions	Refraction probe lengths vary from 1 to 24 in. (25 to 600 mm), and the probe diameter is usually 0.5 to 1 in. (12 to 25 mm).
Costs	Light-refraction level switches cost from $150 to $500. Portable sludge level detectors cost $1000. A continuous transmitter for detecting sludge depth or sludge interface costs $4000 and up.
Partial List of Suppliers	Automata Inc. (www.automata-inc.com) (noncontacting infrared) Bindicator (www.bindicator.com) (IR switch) BTG Inc. (infrared) Conax Buffalo Technologies (www.conaxbuffalo.com) (fiber optic) Enraf Inc. (www.enrafinc.com) (infrared) Gems Sensors Inc. (www.gemssensors.com) (fiber optics) Kinematics & Controls Corp. (www.kcontrols.com) (fiber optic switch) Markland Specialty Engineering Ltd. (www.sludgecontrols.com) (IR for sludge) OPW Div. of Dover Corp. (www.opw-fc.com) Zi-Tech Instrument Corp. (switch)

The operation of optical level detectors can be based on the reflection, transmission, or refraction of conventional, laser, or IR light. Because laser level sensors have already been discussed in Section 3.9, and fiber optic systems will be dealt with in more detail in Chapter 8, we will concentrate here on sensors that operate with visible and IR light.

LIGHT REFLECTION

Reflected visible or infrared light beams can detect the level of liquids or solids, as illustrated in Figure 3.12a. A beam of light is aimed at the surface of the liquid or solids and is reflected back to a light-sensitive transistor, which is located in the same holder as the light source.

© 2003 by Béla Lipták

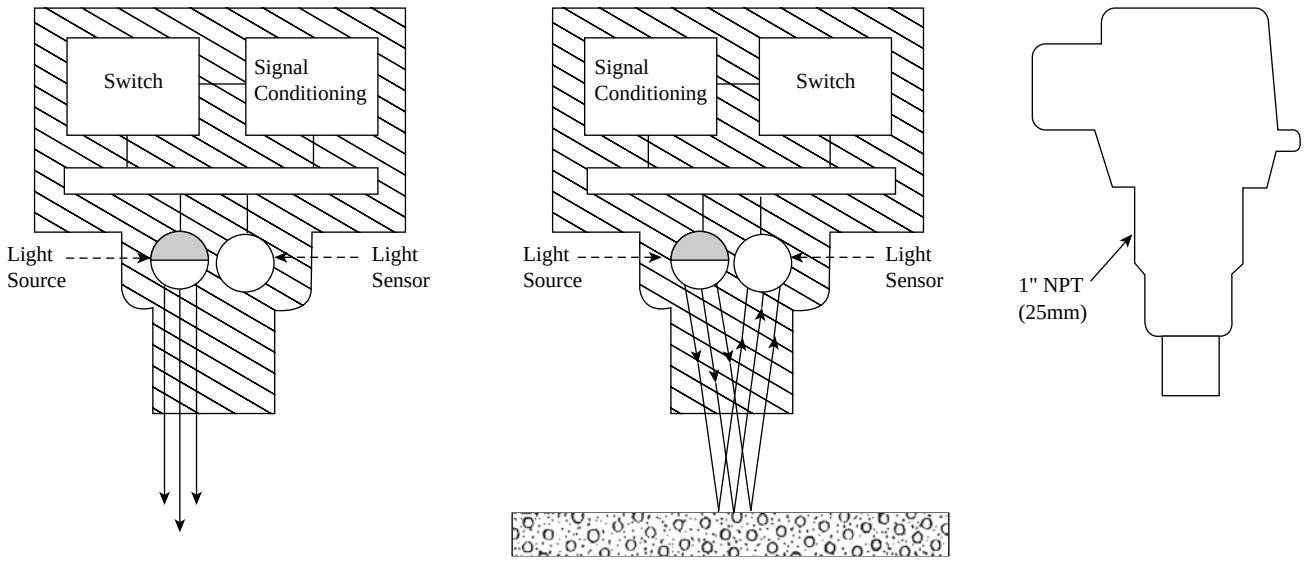

FIG. 3.12a
Noncontacting optical level sensor. (Courtesy of Bindicator, Inc.)

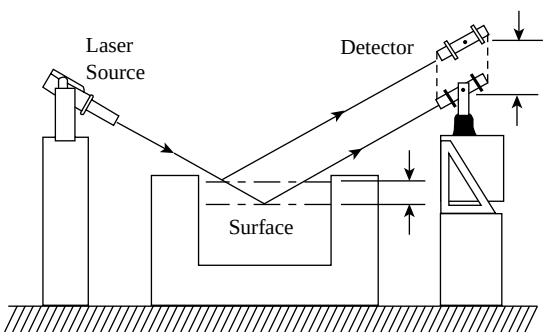

FIG. 3.12b
A laser beam reflected from the fluid surface is tracked by a servo-controller detector.[1]

As a point sensor (switch) on reflective, opaque liquids (such as milk) or on solids services, the transistor sensitivity can be adjusted to detect distances from 0.25 in. (6.3 mm) to 12 in. (300 mm). The sensor can be provided with several light-sensitive detectors to permit multipoint switch actuation. The allowable operating temperature range is from –40 to 150°F (–40 to 66°C). Because of its noncontacting design, the switch is suitable for use on corrosive, sticking, and coating process. The operation of the switch is adversely affected by changes in the reflectivity of the process.

The reflection of laser light (see Figure 3.9a) is used in some specialized applications. The measurement of the thickness of molten glass is illustrated in Figure 3.12b. Here, a laser source is mounted on one side of the process at an angle of between 15 and 60° from horizontal. The detector is mounted on the other side of the process and at the same angle as the source. As surface level changes, the reflected beam is displaced as shown in the figure. The detector is arranged so that this displacement can be measured, and the control unit is calibrated to convert the displacement to an analog signal proportional to level. It can also be furnished with alarm or interlock contacts.

For this unit to work properly, the surface of the process level must be clean and reflective. The span is limited to approximately 0.5 in. (12.5 mm). This noncontacting instrument can be used, for example, to monitor the thickness of molten glass as it is formed into sheets.

LIGHT TRANSMISSION

When light is passing through a fixed distance in a fluid, the intensity of light received at the detector can be used to measure the concentration of solids in the liquid. This same principle can also be used to measure sludge level or the interface between sludge and supernatant. The level sensor can be a point-sensing switch (Figure 3.12c) or a continuous sludge depth detector.

In one design, the sensor and its electronics are portable, and the sensor is attached to a 30-ft (9-m) cable with which

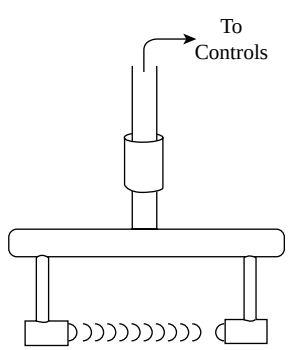

FIG. 3.12c
Optical sludge level detector.

© 2003 by Béla Lipták

the operator lowers the sensor into the clarifier until the interface is detected between the low solids supernatant and the high solids settled sludge. Wetted-parts materials are available in nickel plated naval brass. The error in such measurement, assuming that the cable is marked and read correctly, is 1 in. (25 mm).

In clarifiers, digesters, or air flotation thickeners, traveling scrapers are often provided at the bottom of the tank. In such installations, the sludge depth or the sludge-supernatant interface can be detected by pivoted probes that are provided with an optical gap. Inside that gap, pairs of IR light sources and detectors are stacked vertically on 3-in. (19-mm) centers. Figure 3.12d illustrates an installation with 64 such LED and detector pairs.

LIGHT REFRACTION

Infrared or visible light refracts when sent into a liquid through a submersed prism. Figure 3.12e illustrates a simple and inexpensive use of that principle for level detection. In this design, a light beam is directed along a cylindrical translucent rod that has a 45° bevel at its base. When no liquid is present at the tip, the beam is reflected back to a light-sensitive transistor. As the level rises and covers the tip of the probe, the index of refraction increases, and light escapes into the liquid. This reduces the amount of light received by the transistor and triggers the switching action. The unit is small, lightweight, and available in plastic, brass, aluminum, or stainless-steel construction. It is capable of detecting such small changes in level as 1/16 in. (1.6 mm).

The probe has a pressure rating of 100 PSIG (0.69 MPa) and can operate at temperatures between 15 and 250°F (–90 and 121°C). The switch cannot be used in caking or coating liquids. Another limitation is the false level indication that can result if drops of liquid remain of the probe after the liquid level has dropped down. In that case, the switch will continue to indicate a high level. Therefore, the use of this switch is limited to clean, noncoating services.

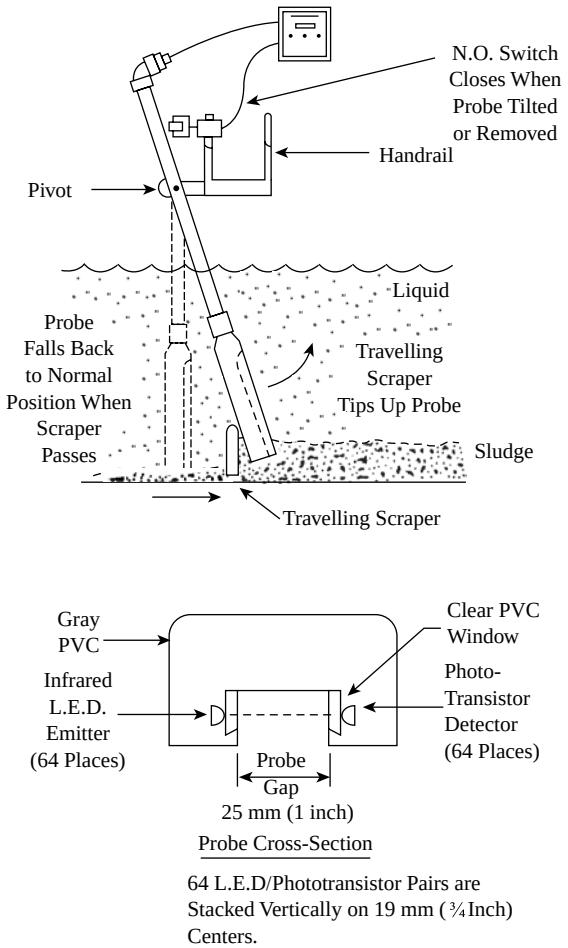

FIG. 3.12d
Optical sludge level detector for wastewater treatment processes. (Courtesy of Markland Specialty Engineering Ltd.)

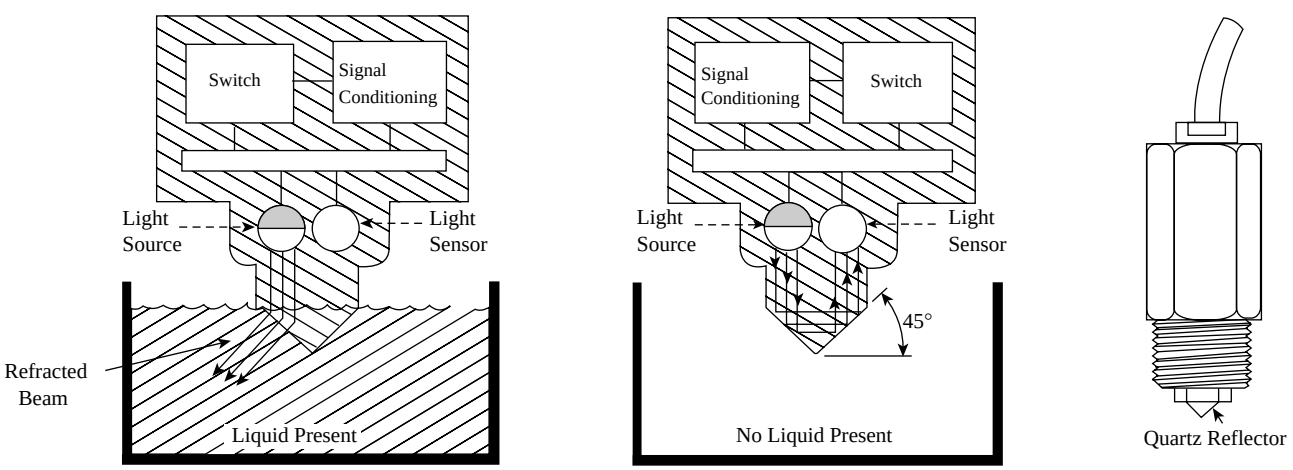

FIG. 3.12e
Light-refraction-type level switch. (Courtesy of Bindicator Inc.)

© 2003 by Béla Lipták

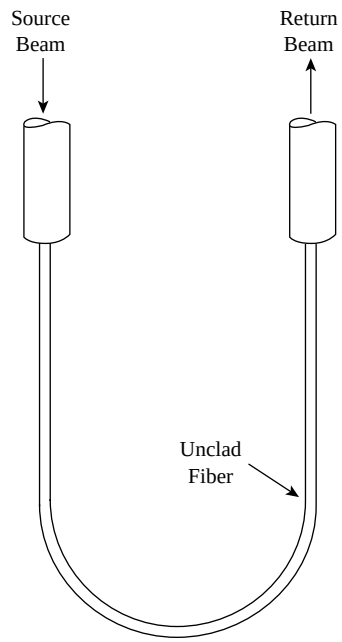

FIG. 3.12f
Level detection using fiber optics.

Figure 3.12f shows how optical fibers can be used for liquid level detection. A light beam travels in the illustrated fiber and, as long as no process fluid contacts the fiber, the return beam will have the same intensity as the source beam. As the level rises, and liquid covers some of the fiber, the index of refraction increases, allowing some of the light to escape into the liquid. This reduces the strength of the return beam.

CONCLUSION

The refraction-type optical level switches are not used in severe services, because of their pressure and temperature limitations, and because they are not suited for fouling and caking services. The reflection-type designs are used as non-contacting sensors in processes in which the vapor space is clear and the operating pressures are low. Their laser versions can provide high precision on narrow-span applications. The light-transmission-type optical level sensors have been used successfully in the wastewater treatment industry, both as level switches and as level transmitters.

Reference

1. King, C. and Merchant, J., Using electro-optics for non-contact level sensing, *InTech*, May 1982.

Bibliography

Bahner, M., A practical overview of continuous level measurement technologies, *Flow Control*, June-July 1997.

Berto, F. J., Technology review of tank measurement errors reveals techniques for greater accuracy, *Oil & Gas J.*, March 3, 1997.

Cho, C. H., *Measurement and Control of Liquid Level*, ISA, Research Triangle Park, NC, 1982.

Control level under fouling conditions, *Hydrocarbon Processing*, November 2000.

Felton, B., Level measurement: ancient chore, modern tools, *InTech*, August 2001.

Fiber optics measure liquid level, *Machine Design*, June 28, 1973.

Fiber optics monitor oil-tank levels, *Machine Design*, October 21, 1976.

Gaige, R. A, The Installation of Digital Control System for a Glass Container Furnace, IEEE/IAS Meeting, Cleveland, OH, 1979.

How can we measure level of petroleum sludge? *Control*, August 1999.

Hughes, T. A., *Measurement and Control Basics*, 3rd ed., ISA, Research Triangle Park, NC, 2002.

Johnson, D., Checking level: not glamorous, sometimes dangerous, but necessary, *Control Eng.*, August 2001.

Johnson, D., Level sensing in hostile environments, *Control Engineering*, August 2001.

Koeneman, D. W., Evaluate the options for measuring process levels, *Chemical Eng.*, July 2000.

Lerner, J., Continuous level measurement: an introduction to 16 basic types, *Control*, November 1990.

Level sensing with fiber optics, *Instrum. Control Syst.*, January 1977.

Mariam, P. L., Measuring level in hostile and corrosive environments, *InTech*, April 1979.

Mathe, A., Apparatus for the Precise Determination of the Level of Glass in a Furnace, Patent no. 1,706,857, August 10, 1926.

Murphy, E. F., Laser refection technique for measurement of glass level in a tank, Paper #76–767,1976 Annual Conference, ISA, Research Triangle Park, NC.

Nyce, D. S., Tank gauging advances, *Fuel Technology Management*, January 1997.

Optic liquid level sensor guards oil tanks against overflow, *Control Eng.*, November 1976.

Optical switch uses reflection to monitor the level of liquid, *Prod. Eng.*, September 23, 1968.

Optical unit prevents liquid overfill, *Can. Chemical Process.*, June 1976.

Passe, J., Optical probe for the accurate measurement of liquid levels, *Rev. Sci. Instrum.*, November 1965.

Paul, B. O., Seventeen level sensing methods, *Chemical Process.*, February 1999.

PFA's optical characteristics put to use in liquid level sensor, *Modern Plastics*, May 1979.

Safety of Laser Products, IEC-60825, November 2001, International Electrotechnical Commission, Geneva.

Sludge level control, *Water Pollut. Control*, September-October 1985.

Taylor, D., An Economical Method of Glass Level Control Utilizing a Laser Beam Generator and a Solid State Detector, Paper #77–838, 1977 Annual Conference, ISA, Research Triangle Park, NC.

Ussyshkin, V. R., Laser Safety Ignition, Research Results for AccuPulse PRO Level Monitor, September 2001.

Van de Kamp, W., *The Theory and Practice of Level Measurement*, 17th ed., Endress+Hauser, Greenwood, IN, 2001.

Waterbury, R. C., Liquid level measurement 101, *Control*, November 1998.

© 2003 by Béla Lipták

3.13 Radar, Noncontacting Level Sensors

J. L. DANIEWICZ (1995) **W. H. BOYES** (2003)

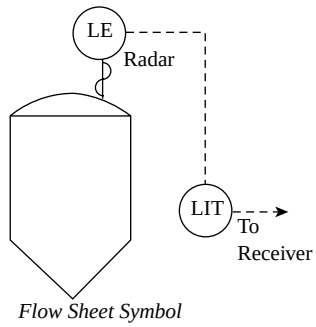

Flow Sheet Symbol

Instrument Types	Frequency modulated carrier wave (FMCW); pulse
Applications	Noncontact measurement of liquids in tanks. The two basic types are tank farm gauges for inventory control or custody transfer and for process control in tanks and reactors. Interference can be caused by agitators and other metallic surfaces, thick foam, window coatings or condensation, and splashing during filling. Some solids applications depend on instrument type and frequency.
Antenna Designs	Parabolic reflectors, horns, extended horns, internal horns with process seals, dielectric rods
Design Pressure	Up to 1200 PSIG (800 kPa) for suspended antennas, to 300 PSIG (200 kPa) for isolated antennas
Design Temperature	Up to 450°F (230°C) for standard designs, higher temperatures to 750°F (400°C)
Wetted Materials of Construction	For suspended antennas, type 316 stainless steel, aluminum, or Hastelloy® with TFL seal; for isolated antennas, a wide choice of plastics; for dielectric rods, generally TFE
Range	Up to 650 ft (200 m) for large antenna sizes of 8, 12, or 18 in. (20, 30, or 45 cm) in diameter; up to 50 ft (15 m) for small antenna sizes of 2, 3, 4, or 6 in. (5, 8, 10, or 15 cm) in diameter when used in free space, and up to 120 ft (35 cm) when used in a stilling well
Inaccuracy	±0.04 to ±0.125 in. (±1 to ±3 mm) for tank farm gauges, from ±1 in. (±25 mm) to ±0.5% of full scale for process-control transmitters
Tolerated Coating	Up to 1 in. (2.5 cm) if the buildup is a nonconductive oil, tar, or wax; up to 0.125 in. (0.3 cm) if the buildup is conductive and water based
Tolerated Turbulence	Up to 3 ft (1 m) waves. FMCW sensors handle turbulence better than pulse sensors do.
Tolerated Foam	Up to 5 to 6 ft (1.5 to 2.0 m) if nonconductive; up to 6 to 12 in. (15 to 30 cm), depending on density, if conductive; negligible source of error
Mist or Spray Effects	Minimal effect for a light mist; full falling curtain of spray will block the beam. If the full spray is horizontal as a result of throwing action from a partially uncovered agitator blade or from a side fill, it will be reported as the level.
Cost	$3500 to $5000 for tank farm gauges, $1500 to $2500 for process-control transmitters

© 2003 by Béla Lipták

Partial List of Suppliers	
Tank Farm Gauges	Enraf (formerly Enraf-Nonius) (www.enraf.com) (FMCW)
	Saab Rosemount Tank Control (formerly Saab Tank Control) (www. saabradar.com) (FMCW)
	L & J Technologies (www.landj.com) (FMCW)
Process Gauges and Transmitters	AMETEK Drexelbrook (www.drexelbrook.com) (pulse)
	Emerson Process Measurement (former Rosemount) (www.rosermount.com) (FMCW)
	Endress+Hauser Inc. (www.us.endress.com) (pulse)
	Krohne (www.krohne.com) (FMCW)
	Ohmart/VEGA (www.ohmartvega.com) (pulse)
	Siemens Milltronics (www.milltronics.com) (FMCW, pulse)
	Siemens AG (www.siemens.com) (FMCW, pulse)
	Solid Applied Technologies Ltd. (www.solidappliedtechnologies.com) (FMCW)
	Thermo MeasureTech (former TN Technologies) (www.thermomt.com) (FMCW)
	Vega Instruments (www.vega.com) (pulse)

Radar level transmitters and gauges use electromagnetic waves, typically in the microwave K- and X-bands (≈ 6 to 28 GHz), to make a continuous liquid level measurement. Most applications have been on liquid service, although several companies report small to moderate success on solids and powders.

Emissions are at low power levels, typically less than 0.1 mW/in.^{2} (0.015 mW/cm^2), because industrial level measurement typically requires less than a 100-ft (30-m) range, which is a short range for a radar technique. At these energy levels, there are no special health, safety, licensing, or product contamination considerations; only solid-state transistors or diodes (rather than tubes) are needed to generate and detect the microwaves. Radar level instruments are generally line powered, although at least one company now claims a loop-powered instrument.

The radar sensor is mounted at the top of the vessel and is aimed down, perpendicular to the liquid surface. This causes the signal that is reflected from the surface to return directly to the sensor. Figure 3.13a shows two types of sensor mountings available for FMCW gauges, whereas Figure 3.13b shows the various types of sensor mountings for pulse systems.



FIG. 3.13a
FMCW radar transmitters. (Courtesy of Thermo MeasureTech Inc.)



FIG. 3.13b
Pulse radar transmitters. (Courtesy of Endress+Hauser Inc.)

PRINCIPLES OF OPERATION

Two basic principles of operation exist for continuous level radar transmitters and gauges. Most tank-farm gauges and some process gauges are operated on the frequency modulated carrier wave (FMCW) principle. Other gauges and transmitters, particularly the lowest-cost units, are operated on the pulse principle.

Both principles are fundamentally based on the *time of flight* from the sensor to the level surface to be measured. In the FMCW method, this time of flight is tracked on a carrier wave; in the pulse method, it is the *echo return*. The latter is analogous to the air sonar principle under which most ultrasonic level sensors operate except that the pulse method operates between 6 and 28 GHz instead of at ultrasonic acoustic frequencies.

© 2003 by Béla Lipták

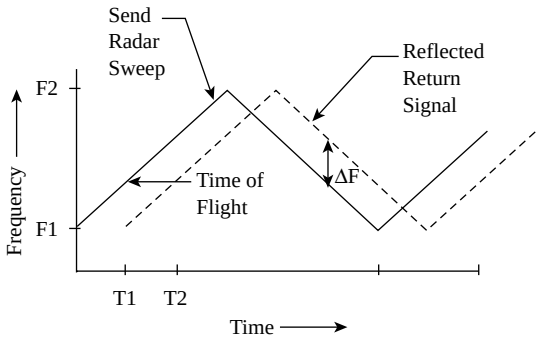

FIG. 3.13c
Radar frequency sweep.

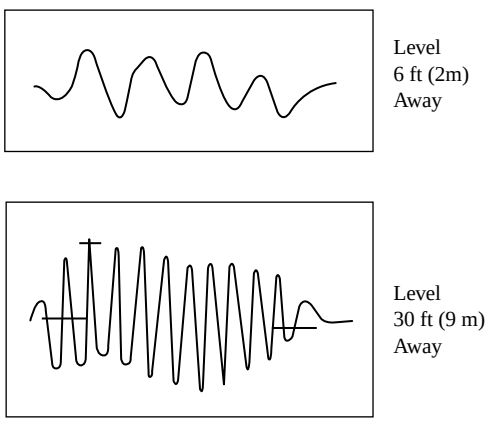

FIG. 3.13d
FM return signal.

FMCW

The time of flight of the reflected signal is measured by controlling the sensor oscillator so that it sends out a linear frequency sweep at a fixed bandwidth and sweep time, as shown in Figure 3.13c. The radar detector is exposed simultaneously to both the send radar "sweep" and to the reflected return signal, which is an "older part" of the radar sweep. The detector output is a frequency signal that equals the difference between the "send" and the "older" signals. This difference in frequency is directly proportional to the time of flight and thus to the distance between the sensor and the liquid level. The result is a frequency-modulated (FM) signal that varies between 0 and more than 200 Hz as the distance varies between 0 and 200 ft (60 m). See Figure 3.13d for oscilloscope views of this signal for different distances. An advantage of this technique is that the process variable information is in the frequency domain instead of the amplitude-modulated (AM) or time difference domain, which allows more accurate signal conversion. This is the same advantage that FM radio has over AM radio. Most tank noise sources are in the amplitude domain, so FM signal processing can ignore them, because accuracy is not affected.

PULSE

The sensor transmits a pulse of microwave energy and receives a return signal from the material level surface. The transit time of the signal is calculated and used to determine the distance to the level surface. This calculation can then be used to determine the level of the material itself.

The amount of return signal received depends on the specific reflective properties of the material level surface as well as signal loss from foam, agitation, and other interferences. Reflectivity can be determined by examining the conductivity and dielectric constant of the material. Generally, conductive products such as water and other water-based liquids (acids, strong bases, and so on) can be measured, regardless of dielectric constant. Nonconductive materials have reflectivity based on the dielectric constant exclusively. Materials with low dielectric constants absorb microwaves and provide much lower reflected signal strength than do materials with high dielectric constants.

To make an accurate distance measurement using time-of-flight calculations, the velocity of wave travel must be constant or it must be measured. The velocity of radar wave transmission is equal to the speed of light divided by the square root of the medium's dielectric constant. Fortunately, the dielectric constants of different gases at different pressures and temperatures vary only slightly from that of air and from that of a total vacuum, so measurement errors due to changing tank conditions are very small. Radar waves are similar to laser signals and very different from ultrasonic waves in this regard. Table 3.13e provides a comparison of radar velocity and ultrasonic velocity under varying gas compositions and temperatures. In ultrasonic gauges, the errors caused by velocity changes can be reduced by wet calibration, by temperature compensation, or by compensation using reference targets. The target in this case should be located near the top of the tank, where the vapor space is uniform and no concentration

TABLE 3.13e
The Velocity of Sound and of Microwaves (Radar) Do Not Change the Same Amount as a Function of the Substance Through Which They Travel

		Velocity at 1 Atmosphere	
Gas Composition	*Gas Temp in °C*	*Radar in million meters/sec**	*Ultrasonic in meters/sec=*
Dry air	0	299.91	331.8
	100	299.94	386.0
Water vapor	100	299.10	404.8
Carbon dioxide	0	299.85	259.0
	50	299.87	279.0
Ammonia	0	299.93	415.0
Acetone	0	297.64	223.0

*From References 1 and 2.
= From Reference 1.

© 2003 by Béla Lipták

gradients exist (as they do near the liquid surface). The presence of nonmetallic foams, mists, and dust in the wave path will have little effect on a microwave's velocity, because the dielectric constant of these media differ little from that of air.

Typically, the minimum dielectric constant for FMCW radar instruments is approximately 2. The minimum dielectric constant for pulse radar instruments is approximately 5. One of the significant application issues for radar continuous level measurement in low-dielectric materials is the fact that, at low levels, the reflectivity of the material being measured may be less than the reflectivity of the vessel bottom or sidewall in the case of a non-straight-sidewall vessel. This means that, when the level is close to zero, the return signal from the vessel bottom may be stronger than the return signal from the material level itself. *Live zeroes* and metallic targets have been used to overcome this application difficulty.

ACCURACY AND RESOLUTION FACTORS

FMCW radar level gauges are the primary tank farm radar devices because of the inherent accuracy in their design. The most accurate units also have the most precise oscillators, and there is a direct correlation between oscillator precision and cost of the component. This essentially means that there is a direct correlation between the highest-accuracy gauges and the most expensive gauges. Pulse transmitters are generally not suitable for tank-farm inventory and custody transfer applications because of the difficulty of producing a highly accurate level measurement with this type of radar transmitter. Pulse transmitters are extremely effective in process tank and reactor level measurements, however, where the limitations on accuracy are less critical and where the smaller antenna designs are essential. In addition, pulse-type transmitters are usually less expensive than FMCW transmitters.

APPLICATION CONSIDERATIONS

Since the early 1990s, radar level transmitters and gauges have become more reliable and have become a mature instrument technology. In use, they have replaced many applications previously handled by ultrasonics and by gamma nuclear continuous level systems. Radar gauges are not a panacea, however. Interferences exist. Although the existence of changing vapor and foam in a vessel has less effect on a radar gauge than on an ultrasonic level sensor, the combination of foam and low-dielectric material can cause the radar gauge to read erroneously or to provide an insufficient signal strength on the return signal for the measurement to be made at all. In glass-lined reactors, tuning problems may exist because of the tendency of the glass lining to act as a waveguide. In other reactors, the tank nozzle acts as a waveguide, and special mounting fixtures or antennas may be necessary to deal with nozzles that are not exactly perpendicular to the tank bottom. The existence of agitators and other internal structures must also be taken into account, because they can produce spurious echo effects. Radar provides an excellent alternative to bubblers, ultrasonics, and gamma nuclear in applications of medium difficulty such as fuming acids, asphalt, LNG, tars, and other heavy hydrocarbons and many other tank-farm and process reactor vessel levels.

References

1. *Handbook of Chemistry and Physics*, 63rd ed., CRC Press, Boca Raton, FL, 1982.
2. Kaye, G. W. C., *Table of Physical and Chemical Constants and Some Mathematical Functions*, 15th ed., Longman, New York, 1986.

Bibliography

Bahner, M., A practical overview of continuous level measurement technologies, *Flow Control*, June 1997.

Boyes, W. H., The changing state of the art in level measurement, *Flow Control*, February 1999.

Daniewicz, J. L., Using radar level measurement for increased environmental protection and plant safety, in *Proc. ISA International Conference and Exhibit*, Anaheim, CA, October 1991.

Increasingly sound investments, *Control*, May 2002.

Larson, K., Tank gauges achieve new levels of accuracy, *Control*, June 1991.

Microwave Radar Instrumentation Installation Planning Guide for Continuous Level Measurement, Thermo MeasureTech (formerly TN Technologies), Round Rock, TX, 1991.

Oglesby, W. W., Radar measures sticky liquid level, *In Tech*, December 1991.

Oswald, H., High temperature radar sensors, *chemie-anlagen+verfahren*, September 1998.

Parker, S., Diverse uses for level radar, *InTech*, May 2002.

Silverman, S., Field tests prove radar tank gauge accuracy, *Oil Gas J.*, April 23, 1990.

Skowaisa, J., Radar level measurement in reaction tanks, *Process*, September 2001.

© 2003 by Béla Lipták

3.14 Radar, Contact Level Sensors (TDR, GWR, PDS)

D. S. KAYSER (1982) **B. G. LIPTÁK** (1995) **B. CARSELLA** (2003)

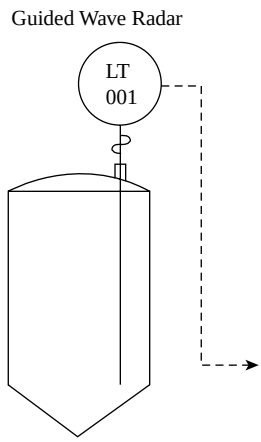

Flow Sheet Symbol

Applications	Liquids and solids with dielectric greater than 1.4 (lower with special techniques)
Supply Voltage	Line (24 to 240 VAC) or loop (24 VDC, two-wire)
Design Pressure	Full vacuum to 5000 PSIG (–1 to 345 bar)
Design Temperature	–230 to +750°F (–150 to +400°C)
Materials of Construction	Metals, 316SS, Hastelloy® C, Monel®; plastics, Teflon®, Halar®, Tefzel®
Range	2 to 200 ft (0.67 to 60 m)
Dielectric range	1.4 to 100
Sensor Pull Strength	11,000 lb (4330 kg)
Inaccuracy	Liquids, 0.1 in. (3 mm) or 0.1%, whichever is greater Solids, 1.0 in. (25 mm)
Tolerated Coating	Low-dielectric coating (E < 10); inaccuracy increases with increase in coating dielectric, thickness, and length
Tolerated Foam	Low-dielectric foam (E < 10); inaccuracy increases with increase in foam dielectric, density, and thickness
Tolerated Mist or Spray Effects	High (little effect)
Tolerated Turbulence	Measurement, high (little effect); mechanical, may need probe secured when severe
Area Classification	Nonincendive, intrinsically safe, and explosion-proof
Cost	$750 to $3500
Partial List of Suppliers	AMETEK Drexelbrook (www.drexelbrook.com) Bindicator (www.bindicator.com) Endress+Hauser Inc. (www.endress.com) K-Tek Corp. (www.ktekcorp.com) Krohne (www.krohne.com) Magnetrol International (www.magnetrol.com) Rosemount (www.rosemount.com) Vega (www.vega.com)

© 2003 by Béla Lipták

DEFINITION OF TERMS

Characteristic impedance. The impedance that, when connected to the output terminals of a uniform transmission line of arbitrary length, makes the line appear to be infinitely long. A uniform line so terminated will have no standing waves on the line, and the ratio of voltage to current will be the same at any point on the line (nominal impedance of the waveguide).[1]

Dielectric. A material that is an electrical insulator or in which an electric field can be sustained with a minimum of dissipation of power.[1]

Dielectric constant. A material characteristic expressed as the capacitance between two plates when the intervening space is filled with a given insulating material, divided by the capacitance of the same plate arrangement when the space is filled with air or is evacuated.[2] The dielectric values of selected materials are given in Table 3.14a.

Discontinuity. An abrupt change in the shape (or impedance) of a waveguide (creating a reflection of energy).[1]

Electromagnetic wave (energy). A disturbance that propagates outward from any electrical charge that oscillates or is accelerated; at a great distance from the charge, it consists of vibrating electric and magnetic fields that move at the speed of light and are at right angles to each other and to the direction of motion.[1]

Equivalent time sampling (ETS). The process that captures high-speed electromagnetic events in real time (nanoseconds) and reconstructs them into an equivalent time (milliseconds) that allows easier measurement with contemporary electronic circuitry.

Guided wave radar (GWR). A contact radar technology in which time domain reflectometry (TDR) has been developed into an industrial level measurement system; a probe immersed in the medium acts as the waveguide.

Phase difference sensor (PDS). A contact radar technology; unlike TDR-based systems, which measure using subnanosecond time intervals, PDS derives level information from the changes in phase angle.

Radar. Radio detection and ranging; a system using beamed and reflected radio-frequency energy for detecting and locating objects, measuring distance or altitude, navigating, homing, bombing, and other purposes. In detecting and ranging, the time interval between transmission of the energy and reception of the reflected energy establishes the range of an object in the beam's path.[1]

Time domain reflectometry (TDR). A process in which an instrument (a time domain reflectometer, also abbreviated *TDR*) measures the electrical characteristics of wideband transmission systems, subassemblies, components, and lines by feeding in a voltage step and displaying the superimposed reflected signals on an oscilloscope equipped with a suitable time-base sweep.[1]

Waveguide. A device that constrains or guides the propagation of electromagnetic waves along a path defined by the physical construction of the waveguide; for example, ducts, a pair of parallel wires, or a coaxial cable.[1]

TABLE 3.14a
Dielectric Constant (ε) Values of Selected Media

Media	*Dielectric @°F (°C)*
Propane	1.6 @32 (0)
Kerosene	1.8 @70 (20)
Mineral Oil	2.1 @80 (27)
Phenol	4.3 @50 (10)
Glycol	37 @77 (25)
Water, DI	15 @70 (20)
Water, tap	80 @80 (27) 48 @212 (100)

INTRODUCTION

Modern contact radar level transmitters owe much of their existence to time domain reflectometry. Although new to the industrial level market, TDR technology has been used for decades. It has been employed for finding breaks in underground cables and the in-wall installations of large buildings. Companies such as Hewlett-Packard, Agilent, and Tektronics supply TDR generators that are optimized for this use. Recent breakthroughs have made this technology less costly and allowed it to consume much less power. Cost-effective loop-powered (24-VDC) transmitters are now available in the industrial market. Two basic types of contact radar level measurement need to be discussed: guided wave radar (GWR) and the phase difference sensor (PDS).

THEORY OF OPERATION

Guided Wave Radar

The fundamentals of GWR come directly from time domain reflectometry, a pulse-sampling technique that characterizes the distributed electrical properties of transmission lines. TDR instruments launch low-amplitude, high-frequency pulses onto a transmission line, cable, or waveguide under test and then sequentially sample the reflected signal amplitudes. Typically, the reflected pulse amplitudes are displayed on a calibrated time scale. In this way, cable impedance changes and discontinuities can be spatially located and assessed.

© 2003 by Béla Lipták

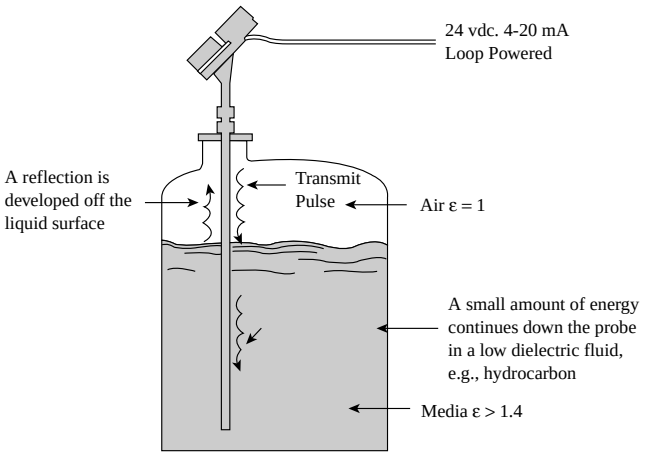

FIG. 3.14b
Fundamentals of guided wave radar level measurement.

In guided wave radar, the waveguide becomes a probe immersed in the liquid (or dry, bulk medium). The characteristic impedance, ε, of the probe (in air, $\varepsilon = 1$) decreases when a liquid (or dry media) of a higher dielectric displaces the air. The electromagnetic pulses transmitted down the waveguide are reflected at this point of discontinuity, and the reflections are measured by high-speed circuitry in the transmitter head; in this manner, the level is established. The fundamentals of guided wave radar level measurement are illustrated in Figure 3.14b.

For typical process media, the dielectric can range from 1.4 to 100. The higher the dielectric constant, the stronger the reflected signal. An oscilloscope trace of guided wave radar showing fiducial (baseline reflection) and strong reflection received from water (a high-dielectric medium) is shown in Figure 3.14c. The oscilloscope trace in Figure 3.14c shows the extremely large reflection created by the high-dielectric water ($\varepsilon = 80$ at 70°F). The small fiducial, or baseline reflection, is the zero point for the GWR measurement. A typical fiducial is ≈200 mV. The large negative level pulse is developed by the reduction in impedance in the waveguide from the presence of the high-dielectric water. The higher the dielectric of the medium, the higher the amplitude of the reflection it creates. In this oscilloscope trace, the high dielectric ($\varepsilon = 80$) water is approximately 2000 mV.

Figure 3.14d shows the same oscilloscope trace with a low-dielectric reflection (≈750 mV) added for comparison. The lower-dielectric medium creates a reflected pulse with decreased amplitude; however, the reflection still exists at the same point in time (position) as the pulse with larger amplitude. Variation in the dielectric of the medium, although important to the creation of a good reflection, is not critical to accurate measurement.

Theoretically, error can be introduced by variations in the speed of propagation related to vapor space dielectric. The high-frequency electromagnetic pulses travel at the speed

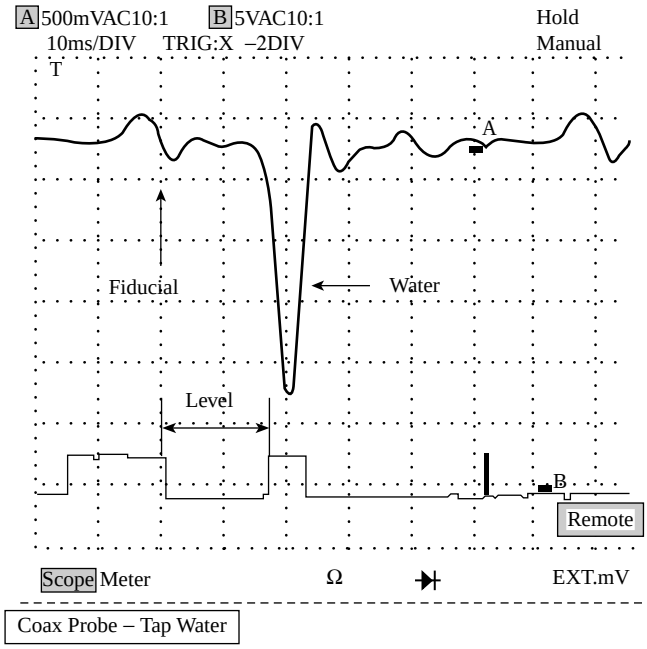

FIG. 3.14c
Oscilloscope trace of guided wave radar showing fiducial (baseline reflection) and strong reflection received from water (high dielectric medium).

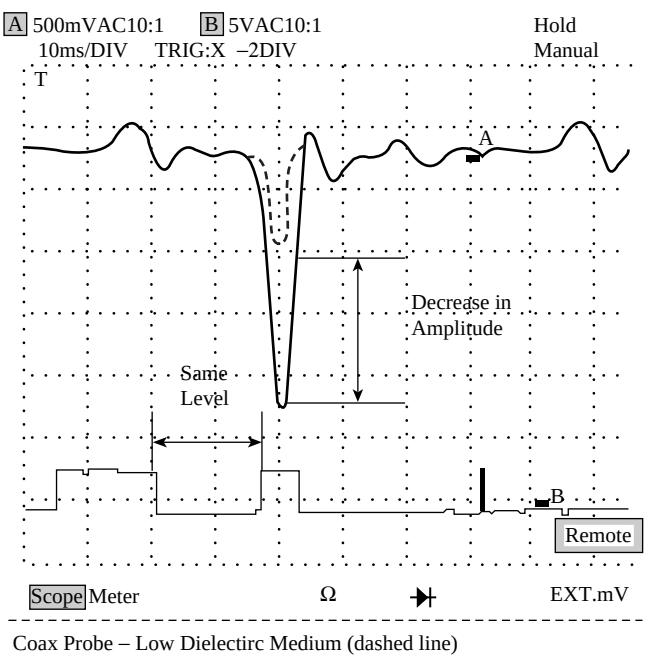

FIG. 3.14d
Oscilloscope trace showing reflection amplitude decreasing dielectric constant of liquid yet its position in time (space) remains constant.

of light. The speed of light (c) in a vacuum ($\varepsilon = 1$) travels at 186,000 mi/sec or 3×10^8 m/sec. This is calculated as

$$c / \sqrt{\varepsilon} \qquad \textbf{3.14(1)}$$

© 2003 by Béla Lipták

where

c = speed of light

ε = dielectric constant of vapor space

As Equation 3.14(1) shows, as long as the pulses travel in a vapor space with ε close to 1.00, no significant variation in the speed of propagation is expected. In practice, this is not a consideration for contact radar.

Phase Difference Sensors

Phase difference sensors are similar to time domain reflectometers (TDRs), except the detection circuit operates in the phase domain rather than the time domain. A high-frequency (f) signal travels through parallel conductors at a fixed velocity (V_0) until it is partially reflected by the stored material interface, where the sensor impedance changes abruptly. The dielectric constant of the vapor space remains nearly unity, even if dust, vapor, condensate, or foam is present. Therefore, the signal injected into the sensor travels down to the material interface and back at a constant velocity V_0. Because of the travel distance of $2(l)$, there will be a phase difference (β) between the input and the reflected signals, as shown in Figure 3.14e.

Contact Radar Systems

The contact radar system is composed of two basic components: an electronic transmitter and probe (waveguide). Careful choice of the probe is particularly important for the successful application of contact radar.

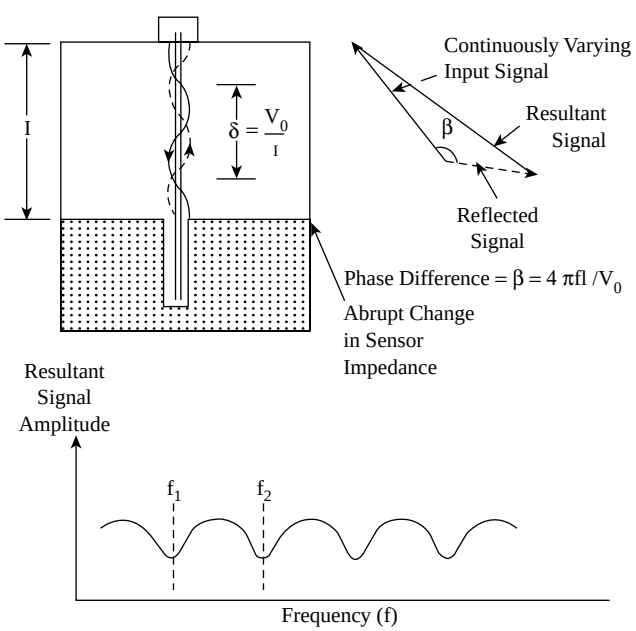

FIG. 3.14e

Frequency (phase) difference measurement used to measure the levels in silos. (Courtesy of Bindicator/Venture.)

Electronics Contact radar circuitry is accurate and responsive. The most modern devices (particularly guided wave equipment) are inexpensive and operate at low power levels (loop powered). Systems benefit from the confluence of two key issues.

1. There have been significant advancements in high-speed, microwave circuits, including the use of equivalent time sampling (ETS). ETS captures the high-speed electromagnetic pulses in real time (nanoseconds) and reconstructs them in equivalent time (milliseconds), allowing the use of slower, less-complex circuitry.
2. The probe, or waveguide, provides a conductive path for the highly efficient transfer of energy to the medium surface and back. Signal processing needs no duty cycling to conserve energy, and there are no false-target reflections to ignore (eliminating a source of complex signal processing required in through-air transit time devices—for example, radar and ultrasonic). This efficient propagation of energy allows reliable measurement of extremely low-dielectric (>1.4) media.

The measurement stability described previously has two key ramifications.

1. A constant speed of light (electromagnetic energy) allows factory calibration; no field calibration is needed—only simple configuration (no level movement is necessary).
2. Accuracy is unaffected by dielectric changes in the medium.

Probe (Waveguide) Three basic probe configurations are utilized today: coaxial, twin-element, and single-element. Coaxial probes (waveguides) are the most efficient, providing efficiency similar to that of the standard 75-Ω coaxial cable used for video and data. The twin element is less efficient; it is analogous to the twin-lead antenna cable used before the implementation of coaxial cable. (It is the configuration of choice with phase difference sensors.) The single-element probe is the least efficient but most forgiving in applications in which the media will coat the probe. Figure 3.14f shows

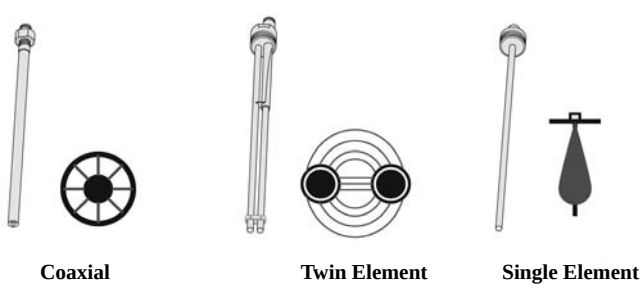

FIG. 3.14f

Fundamental probe (waveguide) configurations and energy fields.

© 2003 by Béla Lipták

the three fundamental probe configurations with their respective energy fields.

PROBE SELECTION AND APPLICATION

Choosing the proper probe (waveguide) is the most important aspect of applying contact radar. The following are the key issues to consider.

Temperature/pressure. The most fundamental process parameters to be considered are temperature and pressure. Because the market offers contact radar sensors rated from −235 to +750°F (−150 to +400°C), and full vacuum to 5000 PSIG (345 bar), there are few process applications that cannot be accommodated.

Dielectric sensitivity. Coaxial probes are the best choice in applications of low dielectric ($\varepsilon < 2.0$) given their propagation efficiency; butane ($\varepsilon = 1.4$) and propane ($\varepsilon = 1.6$) have been measured very successfully. It is important to note that the dielectric of most media has a tendency to change inversely over temperature; as temperature increases, dielectric decreases. It is useful to understand the dielectric of a medium at the specific temperature of the process. Due to the inverse relationship, higher temperatures are more problematic.

Mounting/obstructions/proximity effects. Mounting can be an issue to varying degrees. A coaxial probe suffers from no proximity effects, whereas a single-element probe is the most sensitive and must be applied carefully.

Length. GWR is a contact technology requiring the probe length to be at least as long as the span. This can become an issue for long probes. Shipping costs increase as probe lengths increase. Physically installing a 20-ft (6-m) rigid probe takes some thought; headroom is a key concern.

Material compatibility. Probes are constructed of various combinations of metal, plastic (insulator), and, often, O-rings. Type 316 SS is the most common metal, with Hastelloy® and Monel® common options. Various types of Teflon® (TFE, FEP, PFA) are used as an insulator more than any other plastic. Halar® (ECTFE) and Tefzel® (ETFE) are also used. A common process seal utilizes an O-ring as part of the design and must be considered as a wetted part. The most common O-ring materials are Viton®, EPDM, and Neoprene®. Kalrez®, although more expensive, is specified as an option because of its superior chemical compatibility.

Coating/clogging/buildup/bridging. Being based on contact technology, guided wave and phase difference sensors can suffer error caused by various degrees of coating. Error is related to three key elements: dielectric, coating thickness, and coated length. Low-dielectric media cause little error, whereas higher-dielectric media (e.g., water-based substances) can be problematic. The worst error is caused by a thick, high-dielectric coating that runs the length of the probe before the measurement takes place.

Viscosity. Thin media (<500 cP) can be used with all probes, including coaxial. Single- or twin-element probes should be considered when viscosity exceeds 500 cP.

Turbulence. Turbulence has two effects on GWR, electrical and mechanical. Electrically, turbulence does little to scatter the signal, so it is very effective in these applications. Because there is a probe in the medium, mechanical issues must be considered. Occasionally, it is necessary to secure the probe to prevent failure.

Pull strength. When measuring bulk solid materials (e.g., grains, pellets, and aggregate), the force exerted by the medium on the probe (*pull force*) must be considered; bulk density is the most important parameter. Probes are available with >10,000 lb (4000 kg) of pull strength.

Overfill. Measuring to the very top of a vessel can be problematic for any transit-time device (radar, ultrasonic). Ambiguous readings or nonmonotonic measurement can be experienced. Care must be taken when encountering this application. Contact radar devices exist that measure into an overfill or "flooded" condition (cage/chamber installations).

Hazardous area/Div. 2 implementation. All modern transmitters carry explosion-proof, intrinsically safe and nonincendive (National Electrical Code Division 2, or *Div. 2*, hazardous area) approvals. GWR is a technology that must inject a small amount of energy into the vessel to accomplish its measurement. For this reason, it is important in CLI/Div. 2 applications to consider what is inside the vessel as well as outside. If the medium to be measured is flammable, an intrinsically safe probe circuit must be used. In a Div. 2 area, this may require the use of a transmitter that is rated explosion proof.

INTERFACE MEASUREMENT

In industrial level measurement, *interface* is defined as the point between two immiscible liquids. Contact radar has the ability to measure both the upper and lower liquids if the following conditions are met:

- The upper liquid is a low-dielectric medium ($\varepsilon < 10$)
- The lower liquid is a higher-dielectric medium ($\Delta\varepsilon > 10$)
- The interface is clean and distinct, with no emulsion layer

© 2003 by Béla Lipták

A small reflection will be generated by the upper (low-dielectric) medium while most of the energy continues down the probe. A larger reflection is generated by the lower (high-dielectric) medium. The key is to accurately compensate for the change in pulse propagation velocity while it is traveling through the upper medium, which has a dielectric that differs from that of the vapor space. Emulsion layers are problematic because, by definition, there is not a distinct difference between two media but, rather, a gradual change from one to another. For this reason, detectable pulses are not generated.

CONCLUSION

There is no ideal level measurement technology. In a perfect world, all measurement would be noncontact and even noninvasive. Noncontact radar comes close, but it also has some weaknesses that contact radar overcomes. The new radar technologies, both contact and noncontact, form a team in effective level measurement for many process applications.

References

1. *Dictionary of Scientific and Technical Terms*, 4th ed., McGraw-Hill, New York, 1989.
2. *ISA Dictionary of Measurement and Control*, 3rd ed., ISA, Research Triangle Park, NC, 1995.

Bibliography

Carsella, B., Guided wave radar—a new era in level measurement, *Industrial Process, Prod. Technol.*, October 1998.
Carsella, B., Capacitance level measurement—the end of an era, *Industrial Process, Prod. Technol.*, October 1999.
Carsella, B., The liquid level measurement showdown—guided wave radar vs. pressure/DP, *Can. Process Equipment Control News*, October 1999.
Carsella, B., Automating the invisible liquid, *Propane Canada*, March-April 1999, and *Hydrocarbon Processing (UK)*, January 2000.
Cornane, T., Continuous level control—a review of phase tracking, *Meas. Control*, April 1997.
Gray, J. and Hollywood, P. M., Time domain reflectometry tackles tough tank level measurements, *I&CS*, November 1997.
Hollywood, P. M., TDR level measurement, *Meas. Control*, December 1997.
Nemarich, C. P., Time domain reflectometry liquid level sensors, *IEEE Instrum. Meas.*, December 2001.
Parker, S., Diverse uses for level radar, *InTech*, May 2002.

© 2003 by Béla Lipták

3.15 Radiation Level Sensors

B. G. LIPTÁK (1969) **D. S. KAYSER** (1982)
A. J. LIVINGSTON (1995) **J. C. RODGERS** (2003)

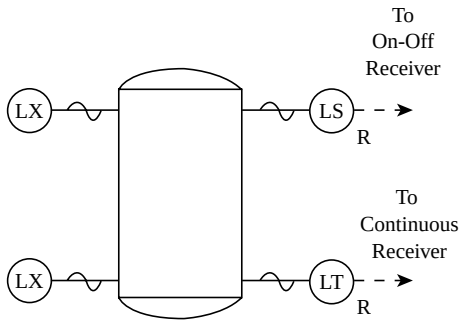

Flow Sheet Symbol

Applications	Noncontact and nonintrusive level measurement of liquids and solids
Temperature	External detectors are suitable for –40 to 160°F (–40 to 70°C) ambient conditions. Units can be provided with heaters for lower ambient temperatures and with air/water cooling for higher ambient temperatures. Traversing backscatter units can operate at up to 250°F (121°C).
Radiation Sources	Cobalt 60 (5.3 years of half-life), cesium 137 (30 years of half-life), americum 241 (455 years of half-life), and radium 226 (1602 years of half-life). Cesium is used most often, because it decays more slowly; cobalt is selected when the tank walls are thick. Point sources are affected by product density variations, but strip sources are not.
Radiation Exposure	One roentgen is received during one hour spent within one meter of a one-curie (1-Ci) radiation source. A subject receives a dose of one rem (roentgen equivalent man) when exposed to one roentgen in any time period. General public allowable limits are 2 mrem/hr and 100 mrem/year. The dose for an occupational worker is 5 rems/year.
Source Sizes	In external types, usually a few hundred mCi or less; in dry-well-type backscatter units, usually 10 mCi. A curie is generated by 1 g of radium, 0.88 mg of cobalt, or 11.5 mg of cesium. One Ci equals 3.7×10^{10} disintegrations/sec or 3.7×10^{10} becquerels (Bq, SI units).
Inaccuracy	For alarm switches, 0.25 in. (6 mm) error can be expected. Errors in continuous units range from 0.125 in. (3 mm) to 1% of span.
Ranges	External units have ranges from 1 in. (25 mm) to 23 ft (7 m) for single stationary units, higher for multiple units, and up to 50 ft (15 m) for motorized units. Traversing backscatter units mounted in dry wells can detect up to a range of 150 ft (45 m).
Costs	Assuming a 10-ft (3-m) diameter vessel with 0.25 in. (6 mm) wall thickness and 1.0-in. (25-mm) insulation, the following costs can be expected: on–off alarm, $2240; continuous level transmitter $8000 and up; gamma backscatter-type level switch $9000 to $15,000; neutron backscatter-type level switch, $16,000 to $35,000; continuous (scanning) backscatter units for up to 150 ft (50 m), $60,000.
Partial List of Suppliers	Barton Instrument Systems LLC (www.barton-instruments.com) Berthold Industrial Systems (www.berthold.com.au) Endress+Hauser Inc. (www.endress.com) Flow-Tech Inc. (www.flowtechonline.com) Imaging & Sensing Technology (www.istimaging.com) Ohmart/VEGA (www.ohmartvega.com) Ronan Engineering (www.ronan.com) Thermo MeasureTech (www.thermo.com)

© 2003 by Béla Lipták

Radiation at different frequencies can be used for level measurement. Included are ultrasonic, radar (or microwave), laser (infrared light), neutron, and gamma forms of radiation. These different radiation forms are also of different strengths in terms of what materials they can penetrate. Some require nozzles on the tank (most ultrasonic and radar designs), and others need windows (laser) or nonmetallic tanks (microwave). Nuclear radiation can pass through metallic walls. The weaker, less penetrating the signal, the more likely is it to be used in the echo, reflection, or backscatter mode. Gamma radiation is sufficiently penetrating to pass through tank contents, although radiation gauges are also used in the backscatter mode, as discussed below.

RADIATION PHENOMENON

Atoms with the same chemical behavior but with a different number of neutrons are called *isotopes*. Many elements have one or more naturally occurring stable isotopes. For example, the stable isotopes of oxygen are as follows:

Stable Isotopes	*No. of Protons*	*No. of Neutrons*	*Percent Abundance*
^{16}O	8	8	99.76
^{17}O	8	9	0.04
^{18}O	8	10	0.20

Most elements also have unstable (radioactive) isotopes. Oxygen's radioactive isotopes are ^{15}O and ^{19}O, which have 7 and 11 neutrons, respectively. The unstable isotopes disintegrate to form elements or stable isotopes. Most of the elements that are heavier than lead are also unstable and disintegrate to form lighter elements. Radioactive disintegration is accompanied by the emission of three different kinds of rays. Alpha (α) radiation consists of positively charged particles having two neutrons and two protons. Beta (β) radiation consists of electrons. Gamma (γ) radiation consists of electromagnetic waves that are comparable to X-rays. The relative penetrating powers of the three kinds of radiation are approximately in the range of 1, 100, and 10,000 for the alpha, beta, and gamma rays, respectively. The penetrating power of alpha rays is less than 8 in. (203 mm) of atmospheric pressure air. Alpha radiation cannot penetrate the skin. Beta radiation can penetrate approximately 0.25 in. of aluminum. Alpha and beta rays carry an electrical charge and can be deflected by an electric or magnetic field. Because gamma rays have great penetrating power and cannot be deflected, gamma radiation sources are chosen for use in level-detecting equipment.

Source Materials

The two most commonly used gamma sources are the radioactive isotopes Co 60 (cobalt) and Cs 137 (cesium). Co 60 is produced by bombarding the stable isotope Co 59 with neutrons. When Co 60 decays, it emits beta and gamma radiation to form the stable element Ni 60 (nickel). In similar fashion, when Cs 137 decays, it emits beta and gamma radiation to form the stable element Ba 137 (barium). The Co 60 isotope decays at two different energy levels, 1.173 million electron volts (MeV) and 1.332 MeV, while Cs 137 decays at 0.662 MeV. Cs 137 is one of many fission products of uranium and is obtained when spent fuel rods from nuclear power plants are reprocessed. There are two important points to note about the gamma decay phenomenon. One is that the decay produces electromagnetic energy, which cannot induce other materials to become radioactive. This means that gamma sources can be used around such materials as food and food-grade packaging materials. The second point is that the source loses strength as it decays. The rate of decay is expressed as half-life, the period of time during which the source loses half of its strength. Co 60 has a half-life of 5.3 years; it will decay approximately 12.3% per year. The figures for Cs 137 are 30 years and 2.3% per year. For point or continuous level measurement, source decay does not affect accuracy, but the initial source size should be fashioned so that the installation has a reasonably long useful life. Typically, the gauge electronics compensate for the decay of the source. In rare instances, the isotope Ra 226 (radium) can be used. This material has a half-life of 1602 years and therefore has no appreciable loss of strength over the life of the installation.

Units and Attenuation of Radiation

The units used to quantify the activity of any radioactive material are the curie (Ci) and the becquerel (Bq). One gram of Ra 226 has 3.7×10^{10} disintegrations per second. This rate of activity is defined as 1 Ci or 3.7×10^{10} Bq, whether it is produced by Ra or some other source. For most level detection applications, source strengths of 100 millicuries (mCi) or less are satisfactory. The unit of radiation exposure is the roentgen (r), which is defined as the quantity of radiation that will produce ionization equal to one electrostatic unit of charge in one cubic centimeter of dry air under standard conditions. A 1-Ci source will produce a dose of 1 r at a receiver placed 1 m (3 ft) away from the source for 1 h. The dose rate unit is the roentgen/hour (r/hr), a measure of the photons reaching the receiver at a defined distance. Radiation is attenuated when it penetrates liquids or solids, and the rate of attenuation is a function of the density of the material. The higher the density, the more attenuation the shielding material will provide. The following shows how various thicknesses of different materials will provide different levels of attenuation. The various thickness values illustrate the half-value layer concept. Each of the listed thicknesses of each material represent the thickness needed to attenuate or reduce the radiation field by one-half. As can be seen, various isotopes,

© 2003 by Béla Lipták

due to their decaying energy value, have different half-value layer thicknesses.

Material	*Cs-137*	*Co-60*
Dirt/wood	6 in.	8.5 in.
Water/plastic	3.75 in.	7.5 in.
Steel	0.5 in.	1 in.
Lead	0.25 in.	0.5 in.

For example, a 0.5-in. (13-mm) steel plate will reduce radiation from a Cs 137 source by half. An additional plate will cause another 50% reduction, so the overall reduction caused by a 1-in. (25-mm) plate is $0.5 \times 0.5 = 0.25$.

As would be expected, the amount of radioactive material required to produce 1 Ci of activity depends on the material. One Ci is generated by 1 g of Ra 226, by 0.88 mg of Co 60 or by 11.5 mg of Cs 137.

The dose rate also will vary. Assuming a 1-mCi source and a receiver 32 in. (812 mm) away, the dose rates will be 1.3 milliroentgens per hour (mr/hr) for Ra 226, 2.0 mr/hr for Co 60, and 0.60 mr/hr for Cs 137. Radiation field intensity in air can be calculated from the following equation:

$$D = 1000\frac{K\text{mCi}}{d^2} \qquad \textbf{3.15(1)}$$

where

D = intensity, mr/hr
mCi = size of source in millicuries
d = distance of source in inches
K = a constant, 1.3 for Ra 226, 0.6 for Cs 137, and 2.0 for Co 60

SOURCE SIZING

In actual installations, radiation must penetrate substances in addition to air, and it is of interest to determine the radiation field intensity after the gamma rays have passed through the vessel walls and process material. The previous equation may be used for this purpose. Figure 3.15a shows a typical installation, and the information below will show how the radiation intensity at the receiver is determined and what levels of operator exposure to radiation may be expected. It will be assumed that the minimum radiation field intensity at the detector should be 2.0 mr/hr when the vessel is empty and that the field should be reduced at least 50% as the vessel is filled. The liquid in the vessel has a specific gravity of 1.0. The calculation is based on the use of a 100 mCi source of Cs 137. With no vessel at all, field intensity at the detector would be

$$D = 1000\frac{K\text{mCi}}{d^2} = \frac{0.6 \times 100}{84^2} = 8.50 \text{ mr/hr} \qquad \textbf{3.15(2)}$$

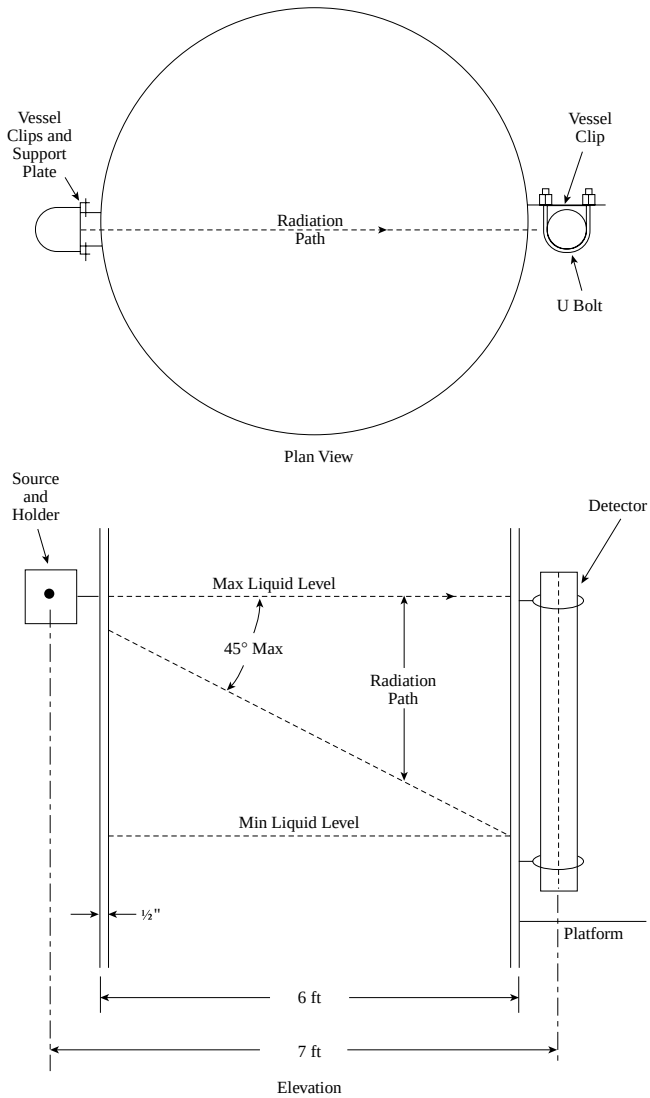

FIG. 3.15a
Radiation instrument installation.

With the empty vessel in place, the attenuation through the two 0.5-in. steel walls will be $0.50 \times 0.50 = 0.25$ (see Figure 3.15a), and the resultant field intensity at the detector is $8.50 \times 0.25 = 2.125$ mr/hr. When the tank is full, the radiation will have to penetrate 72 in. (1.8 m) of material having a specific gravity of 1 (water). From the previous information, approximately 4 in. of water will reduce the radiation field by 50% (half-value layer). In this example, we would need only approximately 4 in. of water to reduce the radiation field to meet the 50% radiation field reduction requirement. This example will have 72 in. divided by 3.75 in./half-value layer = 19.2 half-value layers between the source and the detector with the vessel full, creating effectively no radiation at the detector.

During the empty condition and with the source providing radiation to the detector of approximately 2.125 mr/hr, the radiation field can be calculated for personnel exposures

© 2003 by Béla Lipták

at any distance from the detector by the inverse square law formula as follows:

$$R2 = R1(d1/d2)^2 \qquad \textbf{3.15(3)}$$

$R2$ = radiation field at any distance $d2$ from the source
$R1$ = radiation field at a known distance $d1$ from the source

Doubling the distance from the detector will decrease the radiation field by four times.

Normally, Cesium 137 sources are used over Cobalt 60 sources because of the longer half-life of the cesium isotope. In some instances, such as very thick vessel walls, Co 60, with its higher decaying energy, can offer a solution where CS 137 cannot.

The minimum radiation field intensity required at the detector for good performance depends on several variables, including type of detector technology, sizing practice of the manufacturer, acceptable useful life of the gauge, and radiation safety considerations. For proper sizing, the application information listing all materials between the source and detector, their densities, and their thicknesses must be provided to the manufacturer. This would include insulation, thermal jackets outside or inside the vessel, internal structural supports, diffusers, and agitator blades or shafts. All attenuating materials in the path of the radiation beam must be accounted for to make a proper measurement.

SAFETY CONSIDERATIONS

A gamma source radiates electromagnetic energy in all directions, just as a glowing ember radiates heat in all directions. Short-term exposure to high-intensity gamma radiation or long-term accumulative exposure to lower-intensity radiation is known to be hazardous. The degree of hazard, particularly to long-term low-intensity exposure, is a somewhat subjective determination. Therefore, if an error is made, it should be made on the safe side.

Radiation sources are formed into ceramic pellets that are placed in a double-walled stainless-steel capsule (double encapsulation). The capsule is contained in a source holder that is constructed so as to allow a radiation beam to escape through a very narrow window (collimation) while it is blocked by shielding in all other directions. For the window, a shutter is provided that can be closed and locked when the source is being shipped or when it is out of service. Source shielding is thick enough to reduce the field intensity 1 ft (305 mm) from the source to 5 mr/hr or less. As was mentioned earlier, the disintegrations that produce gamma rays will also produce beta emissions. Because of their low penetrating power, beta rays cannot escape the stainless-steel capsule that encloses the source.

Source holders are designed for a range of source sizes. For example, one holder may be used for sources in the range of 10 to 30 mCi, whereas the next-heavier holder, which provides more shielding, may be used for sources in the range of 31 to 90 mCi. Obviously, if the source being used is at the low end of the range, the field intensity outside of the holder will be less and will approach the maximum 5 mr/hr limit when the source being used is at the top of the range.

Source holders are typically constructed of a steel or stainless-steel outer surface, with lead as the shielding material surrounding the stainless-steel capsule. Some manufacturers offer a fire-proof design in which the source holder is a casting of iron material. Since lead has a melting point of approximately 620°F, during a fire, the lead shielding from the source holder could be lost. The use of iron as shielding material raises the melting point to approximately 1400°F, which is the temperature rating of the source capsule.

Allowable Radiation Exposures

In the United States, rules governing safe exposure limits to radioactive materials have been established by the Nuclear Regulatory Commission (NRC). These rules are incorporated in the Occupational Health and Safety Act. Exposure to external radiation is referred to in units of *rem* (roentgen + equivalent + man). A rem is a measure of the dose to body tissue in terms of its estimated biological effect relative to a dose of 1 r of X-ray. A person receives the dose of 1 rem when exposed to 1 r of radiation in any time period. As illustrated in Figure 3.15b, a person should not receive more than 250 rems over an entire lifetime. The rate at which this exposure is accumulated is also important. It is desirable to keep the yearly dose below 5 rems, and it should definitely not exceed 12 rems per year or 3 rems per quarter. In most industrial processing applications, it is possible to keep operator exposure far below these levels.

For each industrial installation, it is essential to estimate the dosage received by personnel working in the vicinity of

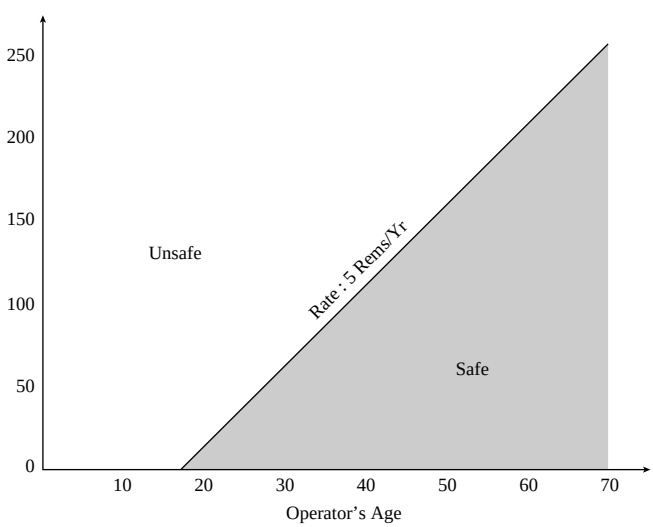

FIG. 3.15b
Radiation exposure as a function of time and safety.

© 2003 by Béla Lipták

the source, using both the assumed occupancy and the proximity to the source, on a "worst-case" basis. Returning to the installation shown in Figure 3.15a, it is assumed that the occupancy is 25 h per week and that the operator is within 12 in. (305 mm) of the tank during this period; the worst case would be if the operator were working next to the source. Assuming that the holder just meets the requirements for 5 mr/hr at 1 ft, operator exposure would be $5 \times 25 = 125$ mr per week, or approximately 6.25 rem per 50-week year. This exposure would exceed set limits.

The second-worst case would be if the operator were working by the detector when the tank was empty. Here, the field intensity would be approximately 2 mr/hr, and the operator's weekly and yearly exposure would be 50 mrem and 2.5 rem, respectively. (The second-worst case condition is cited to illustrate the point that the source shutter should always be closed when the tank is empty. The ultimate in bad practice is to allow a maintenance worker into the tank when the source shutter is open. Special interlock systems are available to prevent this.)

After making the worst-case calculations, the design engineer should determine what can be done to reduce operator exposure. By implementing the tools of time, distance, shielding, and planning, the design engineer can create a gauge installation that will minimize an operator's exposure to radiation. These tools are the essential elements of a principle called ALARA, which stands for "as low as reasonably achievable." By minimizing time around the radiation field, positioning the gauge installation away from traffic areas or using of shielding, and implementing lock-out/tag-out procedures, radiation exposure to personnel can be kept to very low levels.

Nuclear Regulatory Commission

The use of radioactive sources for industrial gauging systems is under the jurisdiction of the Nuclear Regulatory Commission (NRC). The gauges are required to be licensed for use. In many states, the NRC has granted permission for individual state regulatory bodies (*agreement states*) to be the primary contact for the licensing and regulating of the use of radioactive isotopes. The regulations for use, licensing requirements, identification of agreement states, and responsible contacts for emergency notification or basic contacts can be obtained from the NRC web site at www.nrc.gov. The United States is divided into several regions, and the appropriate contact information for each regional office is provided.

When submitting a license application to the NRC or an agreement state for use of a radioactive isotope for industrial gauging, the following information is required:

- Isotope used and source size
- Manufacturer and model number of both the instrument and the source holder

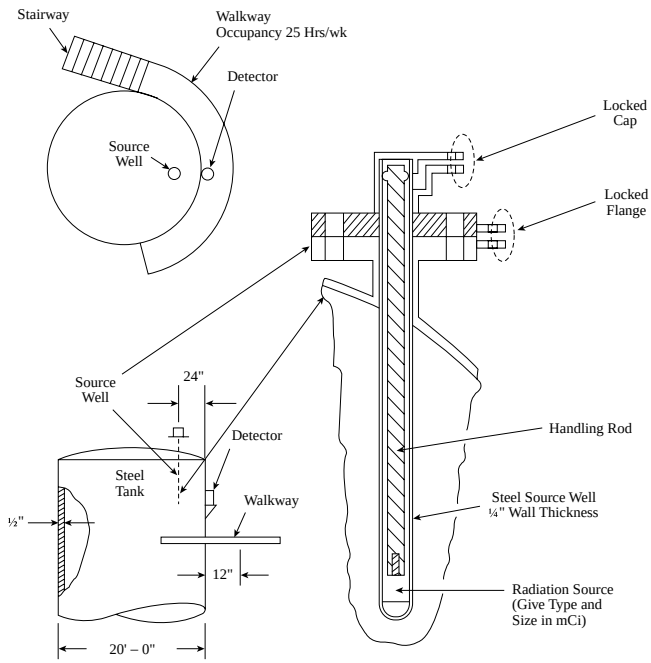

FIG. 3.15c
Typical radiation instrument installation.

- Description of installation (see Figure 3.15c)
- Maximum occupancy of area
- Responsible individual to contact

Depending on the number of radioactive isotopes that will be used at the facility, the licensing process can range from a relatively simple to a more complicated program that incorporates training, detailed procedures for lock-out/tag-out, and other safety measures. In all cases, the end-user is responsible for maintaining documentation and the ongoing testing that is occasionally required to meet the NRC requirements for possession and use of radioactive isotopes.

DETECTORS

A number of gamma radiation detectors are available, but the three commonly used in conjunction with level detection are the Geiger–Mueller (G–M) tube, the gas ionization chamber, and the continuous level scintillator.

Geiger–Mueller Tube

The G–M tube has a wire element anode in the center of a cylindrical cathode. The cathode tube is filled with inert gas and sealed. A bias voltage of up to 700 V is applied across the anode and the cathode. Incident gamma radiation ionizes the inert gas so that there is an electrical breakdown between the anode and cathode. The frequency of the breakdown is related to the intensity of the gamma radiation; therefore, field strength can be determined by counting the pulses produced over a given time interval.

© 2003 by Béla Lipták

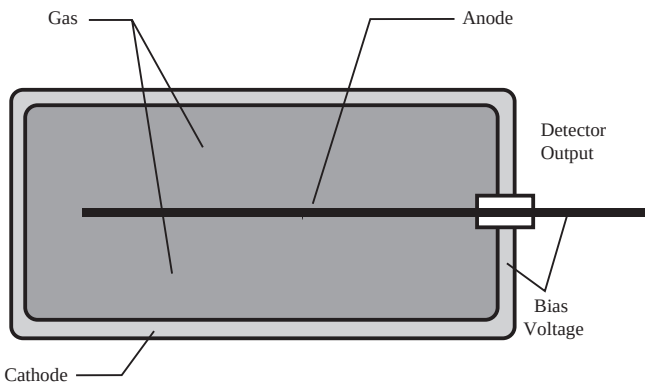

FIG. 3.15d
Gas ionization chamber.

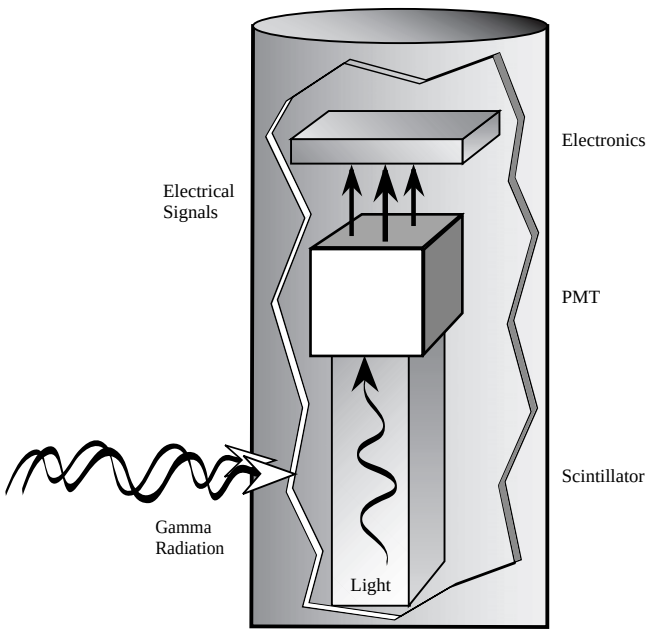

FIG. 3.15e
Scintillator technology.

Gas Ionization Chamber

The ionization chamber is likewise filled with inert gas and sealed, but, rather than applying a breakdown voltage, a smaller voltage in the range of 6 to 100 V is applied across the chamber from end to end (Figure 3.15d). The exact bias voltage varies among manufacturers and is related to optimal performance of that particular chamber design. When the chamber is exposed to gamma radiation, ionization occurs, and a continuous current in the microampere range is caused to flow. This current is proportional to field intensity.

Scintillation

The third gamma radiation detector technology is scintillation (Figure 3.15e). This technology is more sensitive to the same given field of radiation as compared to the G–M tube or the ion chamber. With this technology, a crystal, either specially treated plastic or sodium iodide, replaces the tube of inert gas. The crystal, when exposed to gamma radiation, will create photons of light within the crystal structure. The number of photons created will increase as the radiation field increases. A photomultiplier tube senses the photons of light from the crystal and converts the light to an electrical signal in proportion to the amount of light present.



FIG. 3.15f
Flexible scintillation detector.

LEVEL SWITCH APPLICATIONS

The G–M tube is most commonly used for level switch designs (point detection). The switch detector is arranged so that it sees the full field intensity (tank empty), or it sees little or no field (tank full). Both ion chamber and scintillation detectors are used for continuous level detection. Ionization chambers are made in continuous lengths up to 20 ft (6 m). As shown in Figure 3.15f, the newer flexible scintillation detectors are made in lengths of up to 23 ft (7 m). Geiger–Mueller tubes are furnished in 6-in. (152-mm) and 12-in. (305-mm) lengths and can be stacked to form a continuous detector. The stacked G–M tubes are less expensive than an equivalent length of ionization chamber. However, the G–M tubes are more subject to drift, their performance can deteriorate with time, and they generally require more radiation. A more serious drawback to the use of the G–M tubes is that an exposed (above the liquid level) element can fail altogether. If this happens, it will appear to the receiver that the failed section is covered by the liquid. In a five-section assembly, this would cause a reading that is 20% too high.

Typical level switch installations are shown in Figure 3.15g. The most common is shown at the left, where the source and detector are at the same elevation, and the G–M tube detector is horizontally mounted. In this case, the differential between on–off relay action is 0.25 in. (6.3 mm), meaning that a 0.25-in. (6.3-mm) rise in liquid level is sufficient to block the source beam and change the state of the switch. If a wider differential is desired, the detector is mounted at an angle to the horizontal. For a maximum differential in this installation,

© 2003 by Béla Lipták

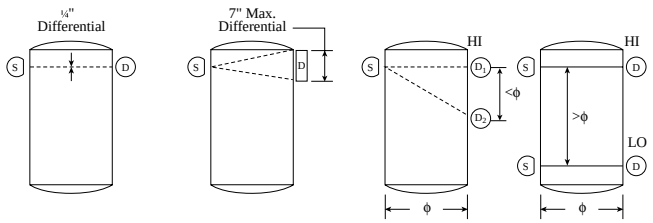

FIG. 3.15g
On–off radiation switch installations.

the sensor is mounted vertically, producing a differential of 7 in. (178 mm). For even wider differentials, two detectors can be used with a single source. In this case, the maximum differential between high and low level settings can equal the tank diameter when using a 45° source beam collimator. Differentials greater than the tank diameter require two separate sets of sources and detectors.

In high-level applications, the G–M tube and switch assembly is normally above the liquid level and therefore exposed to full field intensity. Pulses from the G–M are taken to a trigger circuit that, in turn, continuously resets a time-out relay much like the time-out relay used in a computer watchdog circuit. When rising level blocks the radiation beam, the relay is no longer reset, and the switch changes state; for fail-safe operation, the switch would open. The switch circuitry is arranged so that the switch will open on failure of the G–M tube or failure of any of the switch components, and therefore the entire installation may be judged fail-safe. Low-level switching applications are a different matter. In this case, the G–M tube or switch component failure would not be detected, because exposure of the tube to the beam on falling level would not actuate the switch. Where fail-safe design for falling-level applications is required, a test circuit can be installed in the G–M tube and switch assembly to test the switch when the level is high. There are several ways to do this, but, in general, a small source is installed in the detector and used continuously or intermittently to test the integrity of the tube and switching circuitry.

CONTINUOUS LEVEL MEASUREMENT

Two methods exist for making continuous level measurements using fixed sources and detectors. One method, using a strip source and strip detector, is illustrated in Figure 3.15h. The second, shown in Figure 3.15i, uses a point source and a strip detector. As shown, the strip source radiates a long, narrow, uniform beam in the direction of the detector. As the level rises a small increment, a corresponding small increment of the detector is screened off. This incremental response is uniform and linear over the entire span, and therefore the signal produced is linear with level change over the entire span, except for small nonlinear end effects near 0 and 100% of span. Moreover, this installation, unlike the point switch installation, is not sensitive to variations in the

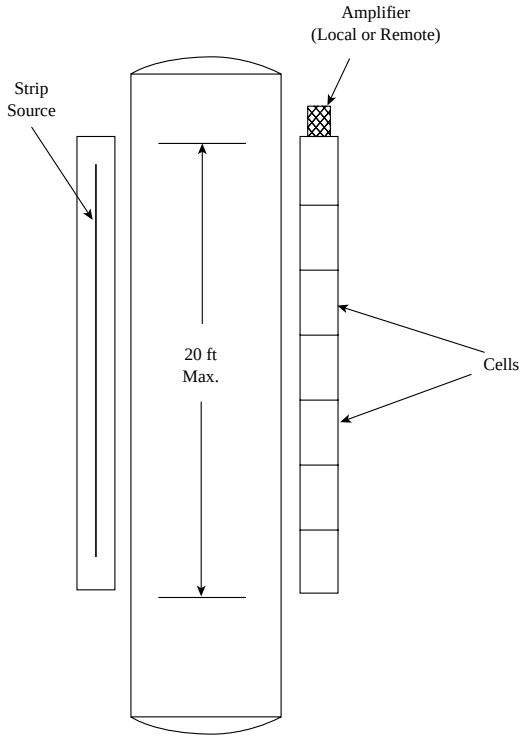

FIG. 3.15h
Continuous level detection by use of strip source and electronic cell receivers.

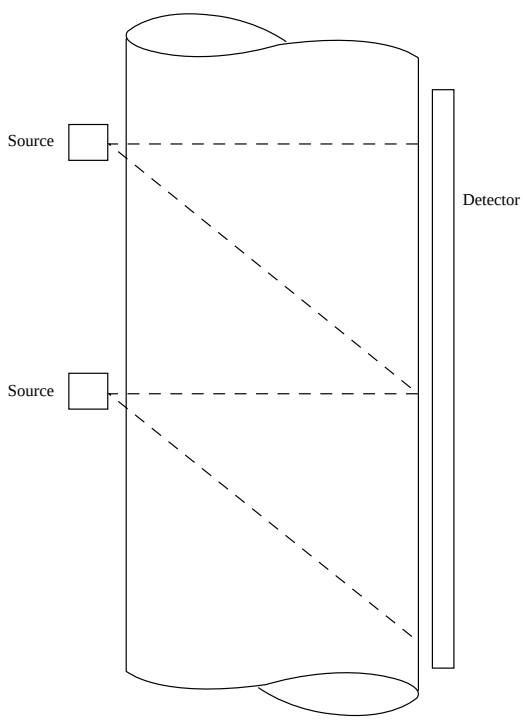

FIG. 3.15i
Level detection using two sources and one detector.

© 2003 by Béla Lipták

specific gravity of the material in the vessel. For example, if the specific gravity of the material varied from 0.40 to 0.70, the source would be sized for 0.40 specific gravity material; material of higher gravity would cause higher attenuation, and this would not affect the performance of the detector.

The point source and strip detector installation also works as a very small incremental on–off device insofar as a small level rise blocks off the radiation beam of a corresponding increment of the detector. The incremental changes in level do not produce a uniform change in the coverage of the detector; consequently, this installation produces a nonlinear signal with level change. Not only does the thickness of the material change as the level changes, but the geometry of the fixed portion of the system—the vessel walls, wall-to-detector distances, and the free space—also changes as the level changes. The nonlinearity of this system can be rectified by correcting the detector output electronically by implementing a linearizer curve.

Narrow Vessels or Interface

For narrow vessels with long measurement spans implementing the point source and strip detector arrangement, it will be necessary to use multiple sources with a single detector, or multiple sources with multiple strip detectors. If the source holder utilizes a 45° collimator where the radiation coming out of the source holder is broadcast from 0 to 45° down from the top of the measurement (see Figure 3.15i), the maximum measurement span from one source is approximately equal to the diameter of the vessel. The second source is located so that the radiation from the first source slightly overlaps with the second source. For the best accuracy, it is important to implement a linearizer curve in the electronics to correct for the changing radiation fields across the measurement span.

Radiation gauges can be arranged to detect, either at a point or continuously, solids levels and liquid–liquid interfaces. The accuracy of these installations depends on source size, detector sensitivity, material gravities, and vessel geometry. Sometimes, a system may be needed to continuously monitor a liquid–liquid interface or a liquid or solid level over a long, vertical, straight side. In these cases, strip source or multiple source and strip detectors would be expensive. Figure 3.15j shows how a point source and point detector may be motor driven over a wide span to detect levels of the above type. The motor drive may be set up to continuously hunt the level (that is, undershoot and overshoot), or it may be set up to look for the level on operator demand, as might be required for an inventory. The exact location of the level is determined by the sprocket-driven position sensor.

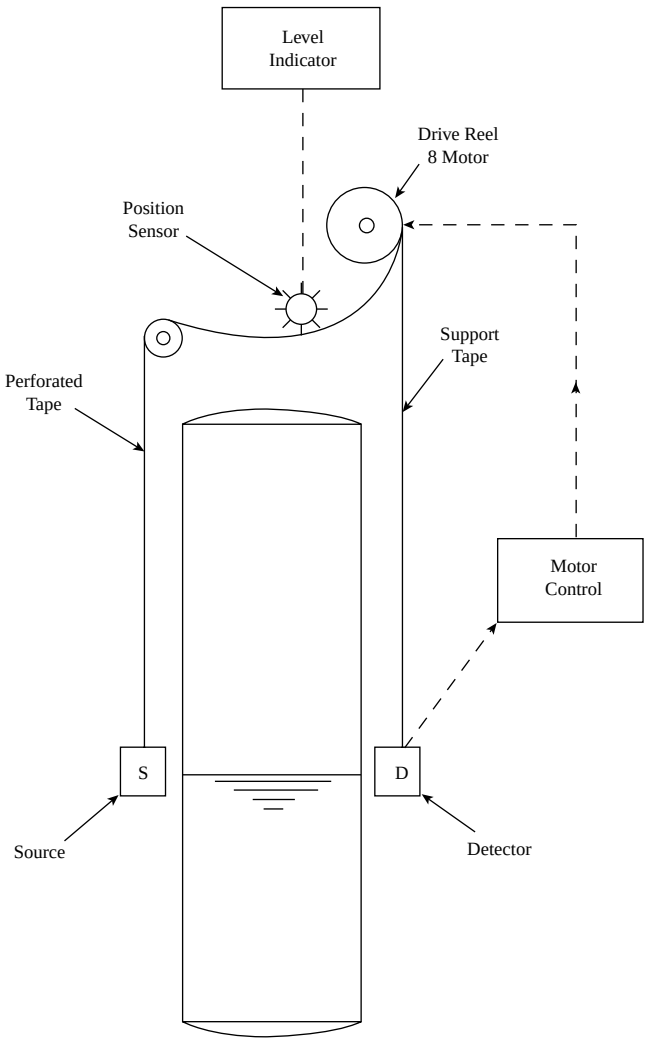

FIG. 3.15j
Continuous high accuracy radiation detector system for accounting installations.

INSTALLATION NOTES

Source holders are furnished with a mounting flange on the window side of the holder (Figure 3.15a). Most older detectors are supplied inside a piece of steel pipe that is capped on both ends. The preferred method of installing this equipment is to bolt it to clips that have been welded to the outside surface of the vessel. Figure 3.15a illustrates how this is done. Newer, lightweight detector designs require a simple support system. The installation can be arranged so that the elevation of both the detector and the source can be changed easily.

The system shown calls for the beam to pass through the center of the vessel. This is unnecessary and would be undesirable in some cases. If the vessel has a center-mounted agitator, fill nozzle, or other internal obstruction, the source and detector should be located so that the beam radiates across a chord where there are no obstructions. A chord may also be selected on large-diameter vessels to reduce source size (Figure 3.15k). The cable run to the detector should be made in such a way that condensate from the conduit system will not flood the detector.

© 2003 by Béla Lipták

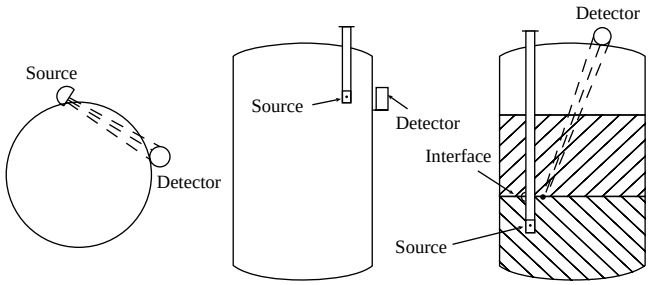

FIG. 3.15k
Relative locations of radiation sources and detectors.

Calibration Considerations

The technique for calibrating radiation level detectors is very important. The gauge should be calibrated after all vessel construction is completed, including the mounting of external insulation. For optimal accuracy, all attenuating materials such as insulation, heating/cooling jackets, internal baskets, internal support structures, and so on need to be in place before calibration is performed.

Radiation detectors do not work on the absolute amount of radiation from the source; rather, the detectors interpret the change in radiation from the 0 level position to the 100% level position. With the source holder open and the vessel empty, the detector's 0 level condition is determined. Optimally, the vessel is then filled to the position to the 100% full level, and the detector interprets the full vessel. Many times, the vessel cannot be filled, so technicians will simply close the source holder shutter to represent the blockage of radiation to the detector, simulating a 100% full condition. Unless the upper measurement range accuracy is needed, this generally is acceptable.

To determine the actual level in the vessel at any given time when using radiation gauges, the technician can use a portable survey meter and run the meter up along the side of the vessel. The top of the level in the vessel will be at the point at which a substantial increase in radiation intensity is detected. Below that level, most of the radiation will be blocked by the process fluid.

BACKSCATTER DESIGNS

Radiation does not always travel in a straight line. In any stream of radiation, there is a certain percentage of the stream that will strike some of the atoms of the material in its path so that part of the radiation stream will bounce back or *backscatter*. The percentage of the radiation that backscatters depends on how much material is in the path and how dense that material is. This method of detection has the advantage that both the source and the detector are on the same side of the vessel. However, one must make sure that there is enough shielding between the source and the detector so that only the radiation backscattered by the process material will be seen by the detector.

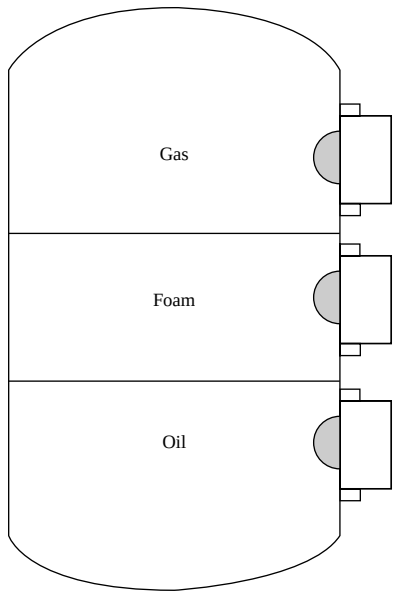

FIG. 3.15l
Neutron backscatter-type level or interface level switch has a repeatability of about 1 in. (25.4 mm).

The exception to this is the neutron backscatter gauge. This type of source emits fast neutrons that become slow neutrons after they have passed through or been backscattered by the process material. The neutron detector only "sees" slow neutrons; therefore, the source and the detector can be placed side by side without any interference (Figure 3.15l). The disadvantages of neutron systems are their high costs ($15,000 to $35,000 per point) and the fact that this investment pays for only a single point sensing level switch.

When gamma radiation is used in a backscattered radiation sensor, a shield between the source and the detector is essential. These units are less expensive than the neutron backscatter switches but are also more limited in their capabilities. They cannot penetrate vessel walls that are thicker than 0.5 in. (12 mm) and must be mounted right next to the wall to minimize backscattering from the wall. This requirement makes it impossible to place thermal insulation between the wall and the source or the detector; therefore, these units are limited to cold tank applications.

Traversing Designs and Density Measurement

To provide continuous level detection based on backscattered radiation, it is necessary to move the source/detector assembly up and down the vessel. In earlier tank-farm level gauges, this was achieved by the operator manually moving a backscatter source/detector assembly up and down on the outside wall of the tank. Automatic traversing is achieved by installing a 2- to 4-in. (50- to 100-mm) dry well inside the tank and by mounting the source/detector assembly inside this well in the form of a traversing plumb-bob. This assembly is connected by a signal cable to the electronics, which are on

© 2003 by Béla Lipták

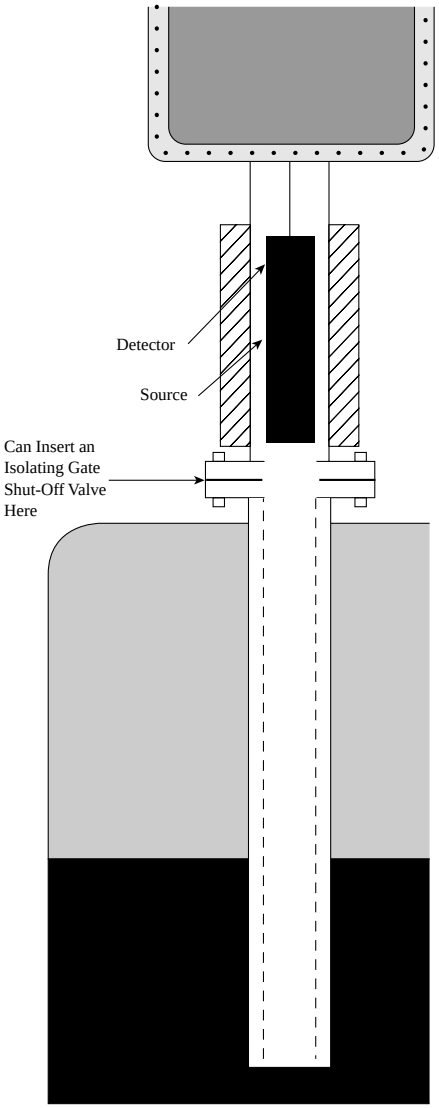

FIG. 3.15m
Traversing radiation backscatter detector can monitor total and interface levels in addition to drawing a specific gravity profile. (Courtesy of Ohmart/Vega Corp.)

the top of the tank. This cable also serves to lift and lower the assembly under the control of a stepping motor (Figure 3.15m). Such a well-type installation tends to amplify the measurement signal, because the backscattered radiation is received from all around the pipe rather than from a single direction.

This increased sensitivity allows the backscatter gauge to detect not only the level but also the density of the tank contents. Because of its density-sensing capability, the traversing backscatter detectors are well suited for interface measurement between two or more layers. If the output of the transmitter is sent to a DCS-based CRT, it can display the location of the different liquid layers, the thickness of the "rag" layers between them, and the density within each layer. Presently, the traversing backscatter units are limited to approximately 120°F (49°C) applications. Another variation of this design is a two-dry-well arrangement in which one well contains the source and the other well the detector. Both the source and detector are scanned up and down in their respective wells to make a transmission measurement of the process between the wells.

The required source size (10 mCi to 50 mCi) is much less than for external source units, because the radiation is received from all directions, and because there is no tank wall to look through. The inner surface of the dry well must be clean and smooth, and the pipe itself must be straight to protect against capsule hangup. These units can detect level ranges up to 150 ft (45 m) and are unaffected by tank diameter or wall thickness.

ELECTRONICS

The detector electronics can be integrally or remotely mounted. In the past, remote-mounted electronics were common. The detector output was a frequency or voltage signal that ran via wire to the remote-mounted electronics, which were generally mounted in the control room or rack room. Mounting the electronics in such a location normally eliminated the need and cost of hazardous qualified enclosures. The electronics received the detector output and provided, normally, a 4- to 20-mA DC output.

As a result of costs associated with running field instrument wiring and allocating valuable control room space for field instrument electronics, the current trend is to have the electronics integrally mounted in the top of the detector housing. The detector electronics transmits a 4- to-20 mA DC signal directly to an end-user's digital control system (DCS) or programmable logic controller (PLC). The 4- to 20-mA DC signal can be a simple 4- to 20-mA analog signal or a 4- to 20-mA DC HART protocol signal. The HART protocol signal superimposes a digital signal, used for calibration and diagnostics, on top of the primary process variable 4- to 20-mA DC signal. This output has proven to be very valuable for end-users, because communication is achieved anywhere along the 4- to 20-mA DC wiring. This can preclude personnel from having to enter a hazardous environment (safety or radiological) to communicate and troubleshoot a gauge. Communication is accomplished through HART universal handhelds, or personal computer electronic software packages from the detector manufacturer. Newer digital processor-based electronic designs can also provide a pure digital FOUNDATION™ fieldbus output to take advantage of new plant instrument wiring techniques associated with FOUNDATION fieldbus devices.

CONCLUSIONS AND TRENDS

A trend to expect is continued evolution in digital electronics, as previously discussed, for preventive maintenance considerations. Digital processors hold promise for more complex signal processing, resulting in higher measurement accuracy and stability.

© 2003 by Béla Lipták

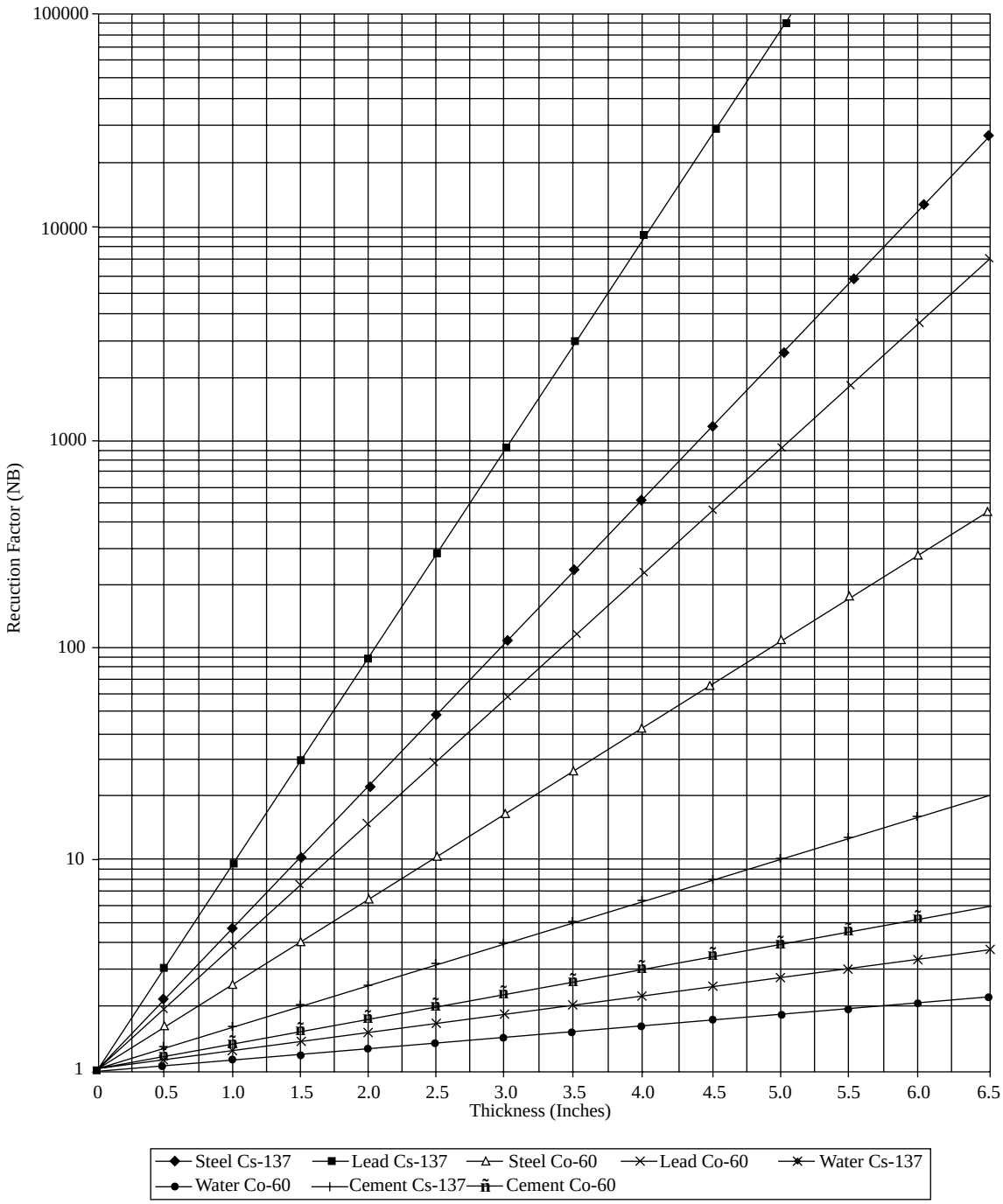

FIG. 3.15n

Radiation reduction (nb) as a function of the source material, the material, which the narrow beam radiation is passing through and of the thickness of this material. So, for example, if the source is Cs-137, which is passing through a 1″-thick steel plate, nb = 4 and therefore the field intensity will be reduced to 25%.

Detector technology will continue to migrate away from ion chambers to more scintillation-based technology. Higher sensitivity and improved stability of detectors can result in lower radiation field requirements, i.e., smaller-activity isotopes.

A very important step in the use of radiation level sensors is the proper sizing of their sources, which generate the gamma radiation at the detector. As the radiation passes the various layers of process and vessel wall materials, it is attenuated to different degrees. To accurately determine the required source size, reliable information is needed. Such information is provided in Figure 3.15n.

Radiation level detection continues to be very appealing for hard-to-handle, toxic, and corrosive processes, because

© 2003 by Béla Lipták

it does not require vessel wall penetrations. Costs and licensing requirements do limit the number of applications but are not serious impediments to carefully designed systems. Although other level technologies are improving and may erode the number of potential nuclear applications, radiation level detectors continue to solve many critical process level applications.

Bibliography

Adams, W. L., The statistics of radiation gaging, *InTech*, September 1968.

Bacon, J. M., The changing world of level measurement, *InTech*, June 1996.

Bahner, M., A practical overview of continuous level measurement technologies, *Flow Control*, June–July 1997.

Boyes, W. H., The changing state of the art of level measurement, *Flow Control*, February 1999.

Carsella, B., Popular level-gauging methods, *Chemical Process.*, December 1998.

Felton, B., Level measurement: ancient chore, modern tools, *InTech*, August 2001.

Hazard free analysis, *Processing*, October 1989.

Holzschuher, P., Gamma level, *Meas. Control*, October 1991.

Johnson, D., Checking level: not glamorous, sometimes dangerous, but necessary, *Control Eng.*, August 2001.

Koeneman, D. W., Evaluate the options for measuring process levels, *Chemical Eng.*, July 2000.

Loftin, R. L., Nuclear level gaging, *Instrum. Control Sys.*, March 1966.

McConnell, J. A. and Smuck, W. W., Gamma back scatter technique for level and density detection, *Chemical Eng. Prog.*, August 1967.

McKinney, A. H., Radiation techniques for process measurements, *Chemical Eng. Prog.*, September 1960.

Paris, T. and Roede, J., Back to basics, *Control Eng.*, June 1999.

Parker, S., Selecting a level device based on application needs, in *1999 Fluid Flow Annual*, Putman Publishing, Itasca, IL, 1999, 75–80.

Paul, B. O., Seventeen level sensing methods, *Chemical Process.*, February 1999.

Rowe, S. and Cook, H. L., Nuclear gages for density and level control, *Chemical Eng.*, January 27, 1969.

Sholette, W., Pick the proper level measurement technology, *Chemical Eng. Prog.*, October 1996.

Thomason, E. M., Design procedure for nuclear level gages, *Instrum. Technol.*, June 1968.

United States Nuclear Commission Booklet, NUREG/BR-0133 Revision 1.

Williams, J., Tips on nuclear gaging, *Instrum. Control Sys.*, January 1979.

© 2003 by Béla Lipták

3.16 Resistance Tapes

D. S. KAYSER (1982) **A. D. EHRENFRIED** (1995) **B. G. LIPTÁK** (1969, 2003)

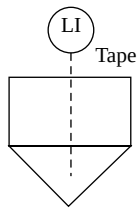

Flow Sheet Symbol

Applications	Liquids including slurries but generally not solids; in addition to level, can measure temperature (see Table 3.16f)
Resolution	0.125 in., which is the distance between helix turns
Actuation Depth (AD)	The depth required to short out the tape varies with the specific gravity of the process fluid (SG) as shown in Figure 3.16c. AD (in inches) = 4/(SG). Therefore, AD at the minimum SG of 0.5 is 8 in. (200 mm). In newer designs, the AD is 5 in. at SG = 1.0.
Temperature Effect	A 100°F (55°C) change in temperature will change the resistance of the nonshorted tape by 0.1%. Temperature compensation is available.
Inaccuracy	0.5 in. if the actuation depth is zeroed out and both AD and temperature are constant. If SG varies, a zero shift based on AD = 4/(SD) will occur. Cold temperature also increases the AD.
Wetted Material	Fluorocarbon polymer film (see Table 3.16f)
Allowable Operating Pressure	From 10 to 30 PSIA (0.7 to 2.1 bars absolute)
Operating Temperature Range	–20 to 225°F (–29 to 107°C)
Costs	The resistance tape unit cost varies with services and tape length. A 10-ft (3-m) tape with breather and transmitter for water service costs from $800 to $1500. The added cost for longer tapes is $30 to $40 per foot, depending on service.
Suppliers	Metritape Inc. (www.consiliumus.com) R-Tape Corp. (www.rtape.com) Sankyo Pio-Tech (www.sankyo-piotech.co.jp)

Resistance tape for continuous liquid-level measurement was invented in the early 1960s, initially for water well gauging and subsequently for marine and industrial usage. The sensor is a flat, coilable strip (or tape) ranging from 3 to 100 ft (1 to 30 m) in length, suspended from the top of the tank. It is small enough in cross section to be held within a perforated pipe (2 to 3 in. diameter), which also supports the transducer and acts as a stilling pipe if the process is turbulent.

Within the sensing tape, shown in Figure 3.16a, is a gold-finished nichrome resistance wire, which is helically wound around a stainless-steel base strip and insulated on the edges and back. It is provided with a gold contact stripe on its uninsulated front face. The wounded helix is joined to the conducting base strip at the bottom, and lead wires are brought from the base strip and the top of the wound helix through the sensor top end. A compliant sheath, commonly of fluorocarbon film,

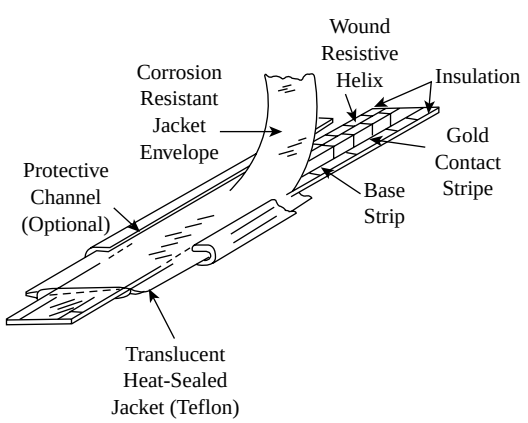

FIG. 3.16a
Construction of resistance tape level sensor.

© 2003 by Béla Lipták

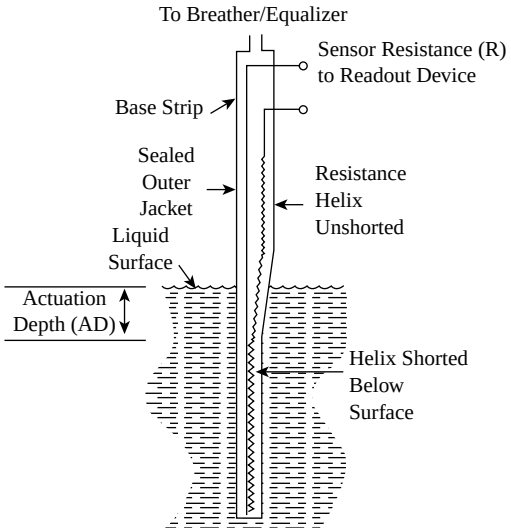

FIG. 3.16b
Schematic diagram of resistance tape sensor operation.

encloses the helically wound inner sensor and acts as an isolation barrier against the infiltration of liquid and vapor.

When surrounded by the process liquid or slurry, the flexible envelope is flattened by its hydrostatic pressure as shown schematically in Figure 3.16b. This presses the resistance helix winding into the gold contact stripe on the base strip.

ACTUATION DEPTH

Because some pressure is required to compress the jacket and thus to short the resistance leg, the tape cannot be shorted out all the way up to the surface of the material. The uppermost electrical contact is made some distance below the surface of the liquid, and this distance, the *actuation depth*, is a function of the density of the process material. For water, the actuation depth is approximately 4 in. (100 mm); for lighter materials, it is increased in proportion to its reduced density. The recommended minimum specific gravity is 0.5. At the time of calibration, this known, and constant offset should be zeroed out. Because of this zero offset, levels cannot be detected below its value.

Sensor resistance, *R*, measured across the two lead wires, changes 1 Ω for each millimeter of level change and corresponds to the length of *unshorted* helix above the liquid. An ohmmeter measurement can indicate the distance from tank top down to the point of shorting. Sensor resistance *R* can be set to equal zero when the tank is full and can equal the full resistance of the helix winding at a liquid level that is low enough that all helix contacts are relieved of pressure and open.

Actuation depth is a function of the sum of the spring rate of the winding and of the jacket, and it causes the uppermost helix contact to lag below the liquid surface by about 100 mm of cold water (SG = 1.00). The gauge is zeroed on the basis of the average anticipated SG anticipated for the particular process. If the specific gravity varies, one can either rezero the

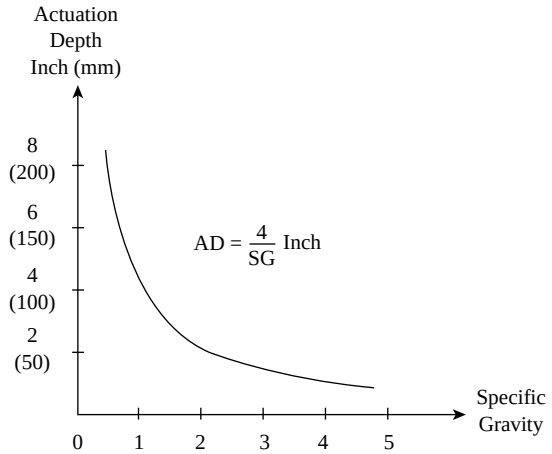

FIG. 3.16c
The relationship between actuation depth and specific gravity.

instrument or accept the resulting error (Figure 3.16c). The actuation depth usually does not change with aging of the tape, although it does increase as the ambient temperature turns cold, as a result of the stiffening of the sheath material. If it is desired to have the tape read the liquid level all the way down to the bottom of the tank, a sump must be provided at that location to extend the resistance tape below the tank's bottom.

PRESSURE EFFECT

To maintain accuracy, the pressure inside the tape jacket must equal the pressure in the vapor space of the tank. For atmospheric tank applications, this is accomplished by venting the tape interior to the atmosphere through a small desiccant dryer (Figure 3.16d). For tanks under pressure or vacuum,

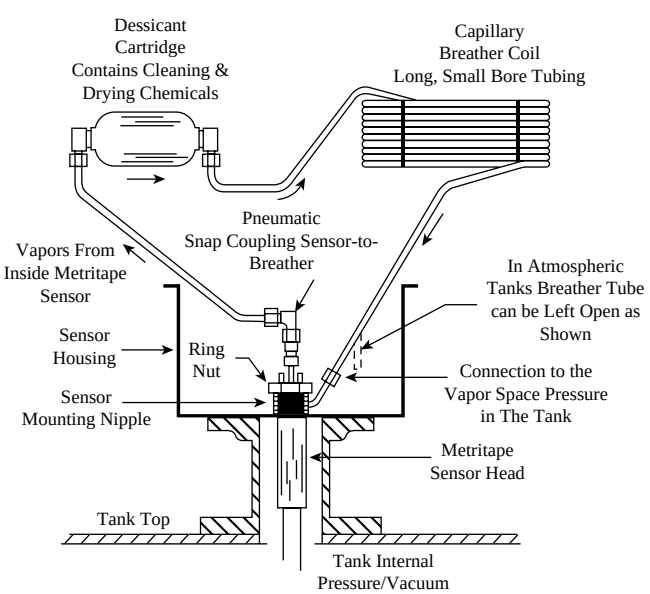

FIG. 3.16d
Capillary breather/equalizer assembly.

© 2003 by Béla Lipták

the tape's internal and external pressures must be equalized. This can be done by installing a direct-connected equalizing line or by mounting a one-to-one pressure repeater on the tank and tubing the output of the repeater to the vent connection on the tape. However, care must be taken to keep moisture and other contaminants from getting inside the tape jacket.

The sealed sensor sheath is vented at the top through a capillary breather/equalizer assembly. This allows the inner resistance-tape sensor to "exhale" as tank level rises and "inhale" as tank level falls. Air expelled from the sensor is cleaned and dried as it passes through the desiccant cartridge and is held in the capillary breather coil, which acts as a reservoir. When the liquid level falls and some of the sensor contacts open up, the clean, dry air is returned to the inner sensor. At the same time, the pressure inside the previously extended breather tubing is returned to the tank pressure, thereby equalizing the inner sensor chamber to match the pressure surrounding the sensor. This allows resistance tapes to operate in pressurized or evacuated tanks.

A typical installation of the resistance tape sensor inside a protective still pipe is shown in Figure 3.16e. The top-mounted housing has a 1.5-in. (38-mm) diameter threaded nipple that is welded in the bottom and to which the sensor head is secured and sealed with a slip nut. The housing serves to hold the sensor head, the capillary breather, the lead-wire connections, and an optional loop-powered transmitter. The stilling pipe can be perforated or slotted if the viscosity or solids content of the process material requires it. A vent hole at the top is always provided. The sensor may be edge-clamped to allow unobstructed gauging of waves or to detect sewage or slurries having very high solids content. It can also be cable-suspended in deep wells or caverns.

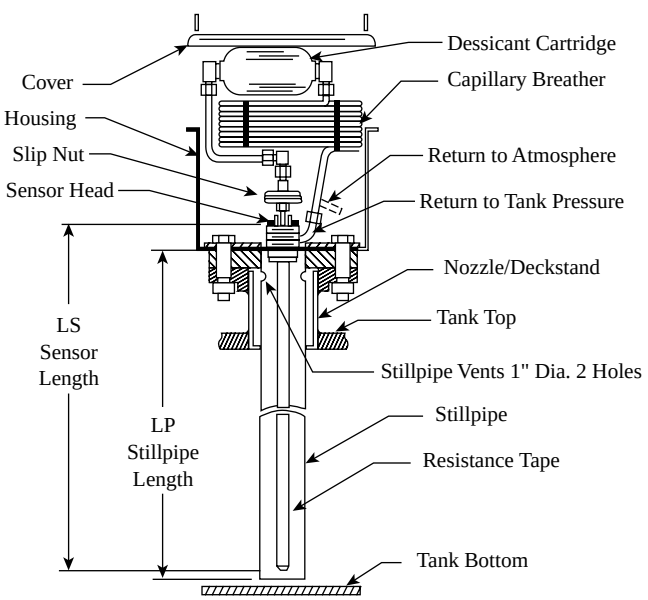

FIG. 3.16e

Typical mounting of resistance tape sensor, housing, and still pipe on tank-top nozzle.

Whereas tank pressure or vacuum is directly equalized through the capillary breather/equalizer, the operating range of equalization is limited by the ability of the standard breather to contain pressure or vacuum without leakage. Resistance tape gauges are used in liquid storage tanks that are vented or pressured by an inert gas blanket. The capillary breather/equalizer requires annual inspection for color change in the desiccant cartridge indicator. Replacement of this component every 3 to 5 years is recommended to prevent corrosion of internal sensor contacts.

The outer sheath of the resistance tape is wetted by the process material and must resist corrosion and permeation. A laminated polyester sheath is used for water and wastewater applications, and a sheath of heat-sealed fluorocarbon film can be added for use in a wide range of liquid applications, including many chemicals and solvents. Certain chemicals, including halogen acids, Freon®, ammonia, and halogenated hydrocarbons permeate this fluorocarbon film. Thus, their level cannot be measured by this design of resistance tapes.

The resistance tape may be provided with built-in temperature detectors for *in situ* temperature measurement. Combined measurements of liquid level and temperature are accomplished by mounting 1 to 3 resistance temperature detectors at selected elevations on the back of the inner sensor and bringing additional lead wires out the sensor top end. A single tank penetration and cable run can thus serve both level and temperature measurement functions.

TEMPERATURE AND OTHER EFFECTS

The unit resistance or resistance gradient, *Rg*, of a standard tape is 305 Ω/ft, and its temperature gradient, *Tg*, is 40 ppm/°C. Therefore, if we have a 20-ft. tape in a vessel that is half full (length *L* of the unshorted tape is 10 ft), and if we want to calculate the error caused in the level measurement if the process temperature changed by $\Delta T = 100$°C, the calculation described by Equation 3.16(1) has to be made.

$$E_{100} = (Tg)(L)(\Delta T)/12 = (40/10^6) \times 10 \times 100/12 = 0.48 \text{ in.} \qquad \textbf{3.16(1)}$$

A built-in temperature detector can be used to compensate for such shift. Resistance tape devices are limited to moderate temperature applications up to 225°F (107°C) so as to stay within the corrosion and permeation capability of the outer fluorocarbon sheath.

Resistance tape cannot operate in a zero-gravity field and cannot be used for liquid–liquid interface measurement. On the other hand, it does have high resistance to mechanical shock and vibration and is therefore well suited for military and seismic services.

Resistance tapes are made in standard lengths of integral feet. The height of the stand-off nozzle at the top of the tank can be adjusted to lift the sensor bottom end to 2 in. above tank bottom.

© 2003 by Béla Lipták

TABLE 3.16f
Tape Selection Chart (Courtesy of Consilium US Inc.)

Service	*Sensor Type*	*Wetted Materials*	*Temperature Range*	*Level Range*	*Pressure Range*
Water, wastewater, sewage	Aquatape	Polyester, epoxy, polypropylene, stainless steel	5° to 140°F (–15° to 60°C)	3–50 ft (1–15 m)	Atmospheric only
Crude oil, petroleum products	Petrotape	Hastelloy® C276, Nylon 12, glass-filled polypropylene	5° to 225°F (–15° to 107°C)	3–100 ft (1–30 m)	±2 PSI
Chemicals, solvents	Chemtape	Hastelloy® C276 or Teflon, polypropylene	Hastelloy®: 5° to 225°F (–15° to 107°C) Teflon: 5 to 140°F (–15° to 60°C)	3–100 ft (1–30 m)	±2 PSI
Water, wastewater, sewage	LA	Polyester, epoxy, glass-filled polypropylene, stainless steel	5° to 158°F (–15° to 70°C)	3–100 ft (1–30 m)	±15 PSI (±1 atm)
Crude oil, petroleum products	LA-HN	Hastelloy® C276, Nylon 12	5° to 225°F (–15° to 107°C)	3–100 ft (1–30 m)	±15 PSI (±1 atm)
Chemicals, solvents	LA-HP	Hastelloy® C276, polypropylene	–20 to 225°F (–30 to 107°C)	3–100 ft (1–30 m)	±15 PSI (±1 atm)
	LA-AF	FEP Teflon, glass-filled polypropylene			

The resistance helix winding is approved as being intrinsically safe for use in hazardous, explosive liquid, and vapor applications (Class 1, Div. I, Groups A, B, C, and D) and in dust and grain applications (Groups F and G).

CONCLUSION

Resistance tapes measure liquid and slurry levels with only one moving part. The movement is caused by the process medium and produces a resistance output that is stable and independent of most liquid properties. This gauge is suitable for the measurement of levels in liquid storage tanks, sumps, and streams if the pressure is near atmospheric and the temperature is near ambient. It can handle corrosive and slurry-type materials (see Table 3.16f). However, because of limitations caused by *actuation depth* variation, pressure equalization, and dryer maintenance, their applications should be chosen very selectively.

Bibliography

Bahner, M., A practical overview of continuous level measurement technologies, *Flow Control*, June-July 1997.

Berto, F. J., Technology review of tank measurement errors reveals techniques for greater accuracy, *Oil & Gas J.*, March 3, 1997.

Control level under fouling conditions, *Hydrocarbon Processing*, November 2000.

Cornane, T., Continuous level control, *Measurement and Control*, April 1997.

Ehrenfried, A. D., *A Guide to Metritape Gauging*, Metritape Inc., Littleton, MA, July 1987.

Ehrenfried, A. D., Level Sensor Key to Dispersed Plant Operation, in *Sensors*, Helmers Publishing, Peterborough, NH, December 1987.

Ehrenfried, A. D., Resistive metritape level/temp gauge for marine closed tank service, in *Proc. Second International Conference on Marine Transportation*, Gastech Ltd., Monte Carlo, March 1979.

Gauging problem liquids with resistance-tape level sensor, in *Sensors*, Helmers Publishing, Peterborough, NH, August 1989.

How can we measure level of petroleum sludge? *Control*, August 1999.

Hughes, T. A., *Measurement and Control Basics*, 3rd ed., ISA, Research Triangle Park, NC, 2002.

Johnson, D., Level sensing in hostile environments, *Control Engineering*, August 2001.

Massachusetts firm has level gauging taped, in *Marine Log*, Simmons-Boardman, Omaha, NE, October 1989.

Metritape Inc., The resistance-tape liquid level sensors, *Shipping World and Shipbuilder*, Marine Publication International, UK, September 1990.

Monitoring liquid level in underground tanks, *InTech*, ISA Services, Inc., September 1991.

Noltingk, B. E., *Instrumentation Reference Book*, 2nd ed., Butterworth-Heinemann, Oxford, UK, 1996.

Nyce, D. S., Tank gauging advances, *Fuel Technology Management*, January 1997.

Parr, E.A., *Industrial Control Handbook*, 2nd ed., Butterworth-Heinemann, Oxford, UK, 1995.

Randall, C., Four case histories: liquid level sensing under extreme conditions, in *Sensors*, Helmers Publishing, Peterborough, NH, 1991.

Randall, C., Level sensing: choosing the course of most resistance, *InTech*, December 1989.

Randall, C., Metritape resistance-tape level sensors help to modernize fuel handling system at Tulsa International Airport, *Aviation Ground Equipment Market*, Jane's Information Group, Surrey, UK, November 1989.

Resistance-tape slurry level gauging contributes to the mineral concentration efficiency of flotation columns in the mining and milling industry, *Can. Process Equipment and Control News*, August 1989.

Van de Kamp, W., *The Theory and Practice of Level Measurement*, 17th ed., Endress+Hauser, Greenwood, IN, 2001.

Waterbury, R. C., Liquid level measurement 101, *Control*, November 1998.

© 2003 by Béla Lipták

3.17 Rotating Paddle Switches

D. S. KAYSER (1982) **B. G. LIPTÁK** (1969, 1995) **W. H. BOYES** (2003)

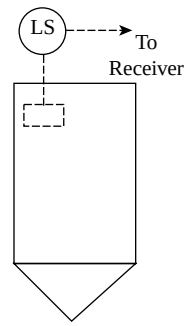

Flow Sheet Symbol

Applications	Solids level switches
Design Pressure	From full vacuum to 100 PSIG (6.9 bars = 0.69 MPa)
Design Temperature	Units with air-cooled shaft extensions can be used on fly ash precipitators where temperatures can range from 450 to 1600°F (232 to 870°C)
Materials of Construction	Wetted parts can be made of aluminum, steel, or stainless steel or may be lined with PVC, Kel-F®, or Teflon
Housings	Weather-tight or explosion-proof
Inaccuracy	Actuation on the same process material is repeatable within 1 in. (25 mm)
Cost	From $200 to $1200
Partial List of Suppliers	Bindicator Div. of Venture Measurement Inc. (www.bindicator.com) BinMaster (www.binmaster.com) Conveyor Components Co. (www.conveyorcomponents.com) Monitor Technologies LLC (www.monitortech.com) Nohken, Sick-Maihak (www.maihak.de)

INTRODUCTION

Solids level measurement is made difficult by the wide range of solids properties involved. The densities of some pulverized materials can be as low as 5 lb/ft^3 (80 kg/m^3) while other, sometimes lumpy materials can have densities in excess of 100 lb/ft^3 (1600 kg/m^3). The main purpose of detecting the level of solids is to signal the breakdown in continuous solids flows, which usually occurs as a result of either arching or bridging (the blockage of flow due to the segregation and collection of larger-sized particles) or flushing and "rat-holing" (the sudden dumping of large quantities as arches collapse). Tank and bin vibrators are used to maintain uninterrupted solids flows. Some materials (e.g., zinc oxide, lampblack, soda ash, activated carbon, titanium oxide, and hydrated lime) have a higher tendency to arch (bridge). Granular materials such as stone, grain, sand, and coal tend to slide more when moist or when the coarse particles are intermixed with finer particles.

The design of feeders and bins must take into consideration the flowing and arching properties of the solids. These properties are usually expressed in terms of the angle of repose. The angle of repose is that angle with the horizontal at which the solids will not yet slide off the inclined plane. When this angle is low (20 to 30°), such as with rye, barley, oats, or soybeans, it is relatively easy to transport these solids; however, when the angle of repose is greater than 45°, such as with pulverized coal or pulverized phosphate, the problems of moving these solids becomes more difficult. If the angle of repose varies in a particular bin, the high-level switch should be located based on the maximum possible angle, and the low-level switch should be located based on the minimum.

© 2003 by Béla Lipták

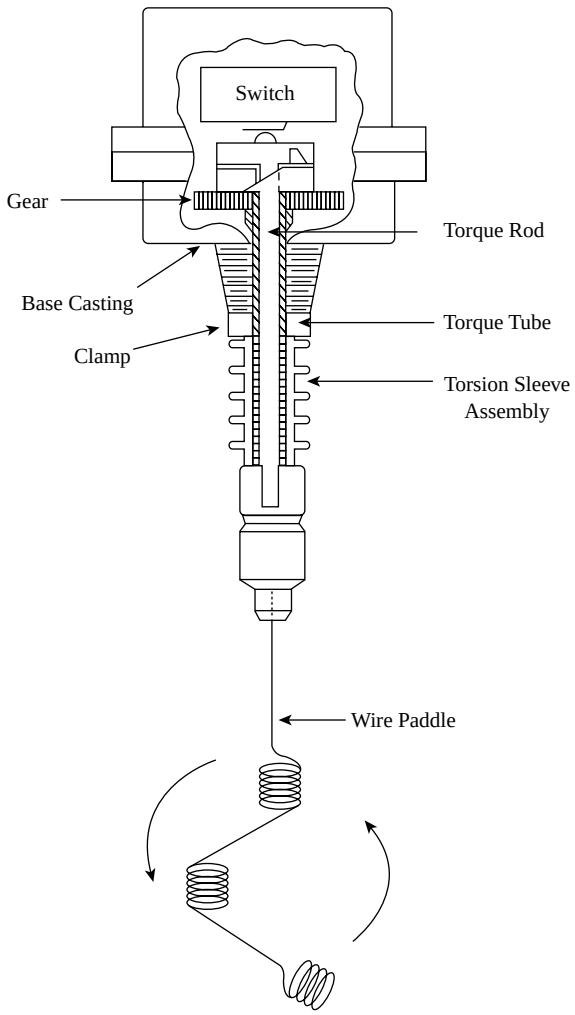

FIG. 3.17a
Rotating paddle switch schematic.

ROTATING PADDLE SWITCHES

The rotating paddle-type level switch is used to detect the presence or absence of solids in a silo. A small, geared, synchronous motor keeps the paddle in motion at very low speed. When solids are absent, there is no torque on the paddle drive assembly. When level rises to the paddle, it is stopped, and torque is applied to the drive assembly. Detection of the torque is used to actuate a switch that, in turn, can be used for alarm or for control of silo filling or emptying equipment.

As shown in Figure 3.17a, one method for torque detection uses a modification of the displacer-type torque tube. When solids are not present (and thus there is no torque on the tube), the entire drive assembly rotates at the speed of the gear in a counterclockwise direction. With solids present, the paddle stops, torque develops on the tube, and the torque rod is forced clockwise relative to the rest of the assembly. This clockwise motion rotates a beveled cam that rises to operate the switch. In some designs, the motor is rated to operate in a continuously stalled condition. In others, the motor is switched off and does not restart until the spring-opposed torque detector returns to the zero-torque position.

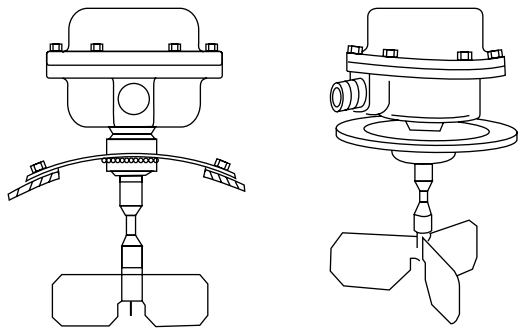

FIG. 3.17b
Paddle switches can be provided with either flat flanges or flexible mounting plates. (Courtesy of Monitor Technology Inc.)

A number of paddle designs are available; larger paddle areas are required to generate sufficient torque in lower bulk density materials. Conventional four-blade paddles, 6 in. (152 mm) wide by 2 in. (50 mm) high, are used in materials with densities below 20 to 30 lb/ft^3 (320 to 480 kg/m^3), whereas vane and wire designs are used in heavier materials. The latter types can be installed through a coupling on the silo wall. The larger paddle designs are furnished with a plate to cover the silo nozzle or cutout through which the paddles are inserted (Figure 3.17b).

Pressure and temperature ratings vary, depending on the unit selected. Standard units have pressure ratings from 7.5 PSIG (52 kPa) to 30 PSIG (207 kPa). When the switch is installed on a pressurized silo, the electrical conduit should be sealed to prevent accumulation of dust in the conduit system in the event that the torque tube or seal ruptures. A common temperature rating for standard units is –30 to 200°F (–34 to 93°C) including the switch and motor housing, although higher ratings are available. These level switches will give repeatable performance on the same solids within 1 in. (25 mm), but their mounting location should be carefully selected, giving consideration to the possible variations in the angle of response. High-level switches have to be lowered in the bin as the angle of repose rises.

Installations

Figure 3.17c illustrates several paddle designs and some methods of installing these switches on silos. Switch locations and immersion lengths are selected after determining the angle of repose of the material and how the orientation and location of the inlet and outlet nozzles will affect average level. Unit A shows a wire design mounted in the side of a silo that may be in the path of falling material. The protective baffle is installed to prevent spurious trips. Unit B shows a conventional top-mounted paddle design with a shaft guard. Unit C is also top mounted and illustrates a rectangular vane design.

© 2003 by Béla Lipták

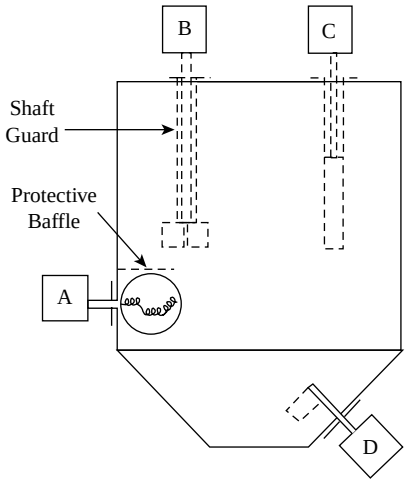

FIG. 3.17c
Rotating paddle solids level switch.

This design, used for heavier material, is located so that the vane will be pinned against the silo wall by the rising level. Unit D is located for low-level detection and depicts a vane design that is suitable for operation in low-density materials.

Paddle switches have the advantage of many decades of application history on different types of services. Their limitations involve the possibility of their rotation being prevented by dirt or rust, their relatively low pressure ratings, and their limited availability for corrosive services.

Bibliography

Andreiev, N., Survey and guide to liquid and solid level sensing, *Control Eng.*, May 1973.

Belsterling, C. A., A look at level measurement methods, *Instrum. Control Sys.*, April 1981.

Felton, B., Level measurement: ancient chore, modern tools, *InTech*, August 2001.

Hall, J., Measuring interface levels, *Instrum. Control Sys.*, October 1981.

Johnson, D., Checking level: not glamorous, sometimes dangerous, but necessary, *Control Eng.*, August 2001.

Koeneman, D. W., Evaluate the options for measuring process levels, *Chemical Eng.*, July 2000.

Lerner, J., Continuous level measurement: an introduction to 16 basic types, *Control*, November 1990.

Lipták, B. G., On-line instrumentation, *Chemical Eng.*, March 31, 1986.

Parker, S., Selecting a level device based on application needs, in *1999 Fluid Flow Annual*, Putman Publishing, Itasca, IL, 1999, 75–80.

Paul, B. O., Seventeen level sensing methods, *Chemical Process.*, February 1999.

© 2003 by Béla Lipták

3.18 Tank Gauges Including Float-Type Tape Gauges

D. S. KAYSER (1982) **B. G. LIPTÁK** (1969, 1995, 2003)*

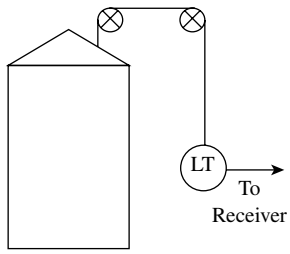

Flow Sheet Symbol

Applications	Tank-farm liquid level detection for accounting purposes and solids level sensing
Types	A. Float operated, wire-guided, inductively coupled B. Servo-operated float type C. Surface detector (plumb-bob) gauges D. Radiation backscatter design (see Section 3.15) E. Radar tank gauges (see Sections 3.13 and 3.14) F. Hydrostatic tank gauges, HTGs (see Section 3.6) G. Hybrid tank gauges
Design Pressure	Surface-detecting solids gauges are used up to 5 PSIG (0.34 bars), standard wire-guided tape gauges are used at 30 PSIG (2 bars), and special designs can be used up to 300 PSIG (20.6 bars)
Design Temperature	Solids level sensors can operate from –4 to 176°F (–20 to 80°C), and tape gauges on liquid tank farms can handle from cryogenic services to up to 300°F (150°C)
Materials of Construction	Mounting flange and housing can be aluminum; wetted parts can be made of aluminum, steel, stainless steel, nylon, PVC, polyethylene, and other plastics or higher alloys.
Electrical Safety	Tape gauges for liquids can be all mechanical or explosion-proof. Inductively coupled float designs are intrinsically safe. The solids level detector plumb-bobs are available in explosion-proof housings.
Range	Standard wire-guided tape gauges are available up to 100 ft (30 m); plumb-bob-type surface sensors are available up to 200 ft (60 m).
Inaccuracy	Error in solids sensors is about 0.2 ft (61 mm); for liquid service automatic tank gauges (ATG) refer to Table 3.18a.
Cost	Plumb-bob solids level sensors start at about $2000. For liquid service automatic tank gauges, refer to Table 3.18a.
Partial List of Suppliers	For the radiation backscatter design, see Section 3.15; for radar tank gauges, see Sections 3.13 and 3.14; for hydrostatic tank gauges, see Section 3.6. Bindicator (www.bindicator.com) (C, solids) BinMaster (www.binmaster.com) (C, solids) Endress+Hauser Systems & Gauging (www.systems.endress.com) (A, B, E, F) Enraf Inc. (www.enrafinc.com) (A, B, C) Krohne Inc. (www.krohne.com) (A, B, E) L & J Technologies (www.ljtechnologies.com) (A, B, C, solids) Monitrol Manufacturing Co. (www.monitrolmfg.com) (A, B, C, E, F)

* I would like to give particular thanks to Frank J. Berto for his many and invaluable inputs on the subject of automatic tank gauging.

© 2003 by Béla Lipták

MTS Systems Corp. (www.mtssensors.com) (A, B)
Rosemount-Varec (A, B)
Saab Rosemount Tank Control (www.saabradar.com) (C, E)

In this section, we concentrate on types of automatic tank gauge (ATG) designs that are not detailed in the other sections. The radiation backscatter gauges are discussed in Section 3.15, the radar-type tank gauges in Sections 3.13 and 3.14, and the hydrostatic tank gauges in Section 3.6. For that reason, they will be mentioned only briefly.

HISTORY OF CUSTODY TRANSFER

Tank-farm level measurement, particularly in the oil industry, has been the basis for buying and selling products on a volumetric basis. In the 19th century, oil could not be measured more accurately than about 5%, so producers agreed on the size of the 42-gal barrel, thereby making sure that there would be at least 40 gallons in every barrel. A hundred years later, the precision of custody transfer improved to about 0.5% and, today, if every error source except nonuniformity in the tank's cross section is carefully eliminated, the error will be about 0.25%.

When oil is sold, it can be sold by weight or volume. If sold by the volume, it can be metered or sold on the basis of level measurements. The more advanced and most accurate method is flow metering (see Sections 2.19 and 2.25), which definitely should be used when transferring smaller volumes, and the more traditional is level measurement. One can measure the level manually (which involves climbing to the top of the tank) or automatically, and one can detect the drop in the level of the supply tank (*outage*) or the rise in the level of the receiving tank (*innage*). As shown in Table 3.18a, some automatic tank gauges (ATGs) are better suited for outage detection, and others for innage sensing.

When measuring outage, we are detecting the distance from the top of the tank to the oil surface. Multiplying this distance times the cross-sectional area of the tank gives the volume of the vapor space, called *ullage*. Outage detection is less accurate than innage, because the outage distance has to be compared to a *reference height* (the mounting location of the gauge), which, if the ATG is supported from the tank shell or roof (Figure 3.18b), varies with oil depth, temperature, and age. Therefore, if the ATG error is 0.125 in., but the gauge mounting can travel 0.5 in., the actual error can reach 0.625 in. This, if the transfer volume is small (e.g., a 2.0-in. change in level), makes the measurement meaningless. The best way to minimize the variation in reference height is to mount the ATG on a properly supported and slotted gauging well. Figures 3.18c and 3.18d illustrate the bottom-supported wells used on floating and fixed roof tanks, whereas Figures 3.18e and 3.18f describe the installation of shell-supported wells on floating and fixed roof tanks.

As shown in Table 3.18a, HTGs and most smart cable ATGs detect innage by measuring the distance from the tank bottom to the liquid surface. Here, if the tank is on a solid surface so that its bottom does not move, there is no reference height, because the volume of liquid in the tank is determined by multiplying the innage distance with the cross-sectional area of the tank.

TANK GAUGE DESIGNS[1]

As can be seen from Table 3.18a, the largest number of existing ATGs are the *float-operated tank gauges*, which have been used for more than 50 years. They are the least expensive and least accurate and were developed to reduce the need for the operator to climb the tank for manual "dipping." Here, as shown in Figure 3.18g, a perforated tape runs up from the float to the top of the tank and then down to the gauge head. For this reason, the float-operated ATGs double the reference height error, because the gauge head is mounted at grade. They also require high maintenance because of the moving parts, although the newer designs have fewer of such parts.

TABLE 3.18a
Features of Automatic Tank Gauges (Based on Reference 1)

Type of Design	*Number in Use in USA*	*Cost (for 40-ft floating roof tank w/temp. measurement)*	*It Measures*	*Accuracy*	*Maintenance Required*
Float	300,000±	$4000±	Outage	Low	Highest
Servo	10,000±	$6500±	Outage	Good	High
Radar	5000±	$8500±	Outage	Good	Low
HTG	5000±	$8500±	Innage	Low	Low
Smart Cable	5000±	Note 1	Innage	Good	Varies
Hybrid	200±	Note 2	Note 2	Note 2	Note 2

Note 1. Costs vary for the different types of Smart Cable systems. A magnetostrictive system for a 40-ft high floating roof tank costs $3500±, including average temperature measurement.
Note 2. The cost, measurement method, accuracy, and maintenance of a Hybrid ATG depends on the level and temperature measurement system. A pressure transmitter adds $1500± to the cost of the system.

© 2003 by Béla Lipták

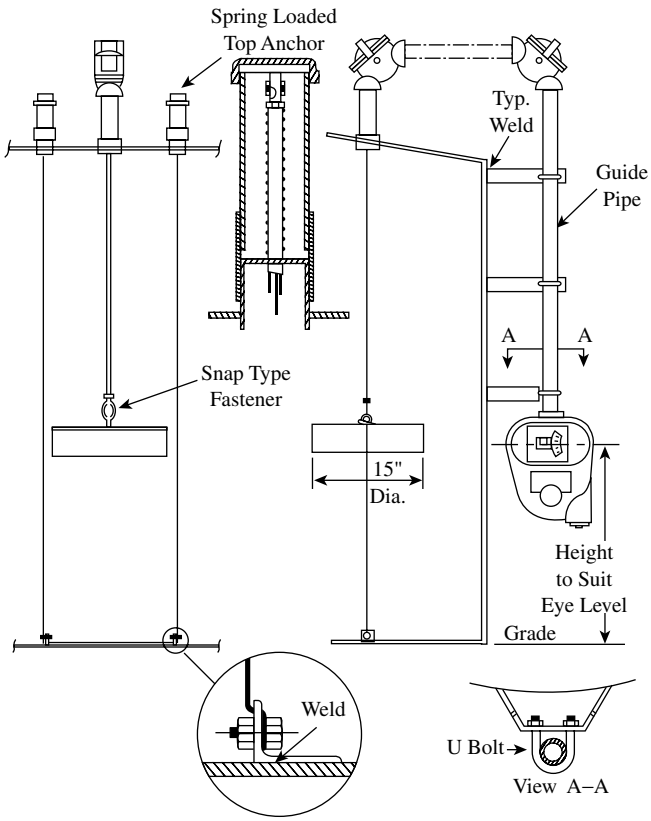

FIG. 3.18b
Wire-guided float detector installation for low-pressure tanks.

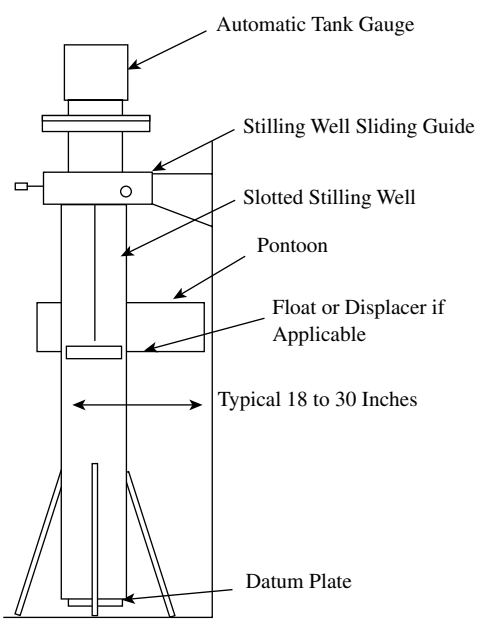

FIG. 3.18c
Bottom-supported gauging well for floating roof tank.

In Europe, during the last decades, *servo-operated tank gauges* been used for custody transfer level measurement to detect the outage. They, too, should be mounted on a properly

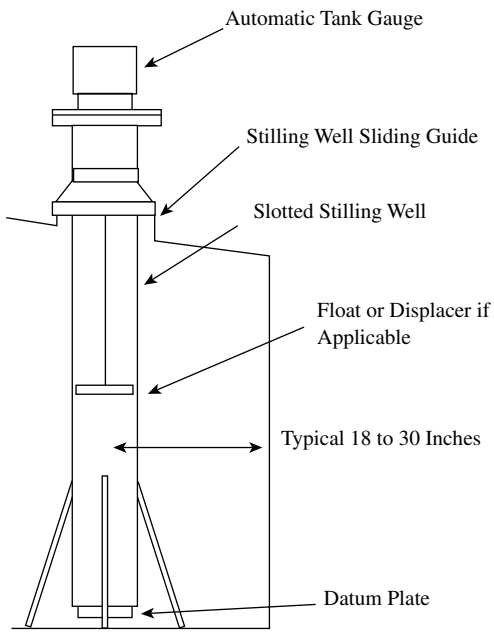

FIG. 3.18d
Bottom-supported gauging well for fixed roof tank.

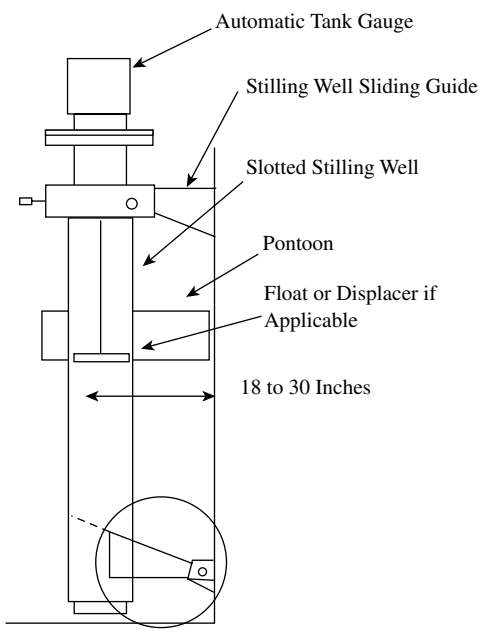

FIG. 3.18e
Shell-supported gauging well for floating roof tank.

supported slotted gauging well to minimize the error caused by reference height movement. Their maintenance has also been improved during the past five years by the development of a new gauge head with fewer moving parts.

As was discussed in Sections 3.13 and 3.14, *radar tank gauges* can also be used for custody transfer level measurement. They, too, measure outage, so they should also be mounted on a properly supported slotted gauging well. They have no moving parts, so their maintenance is relatively low.

© 2003 by Béla Lipták

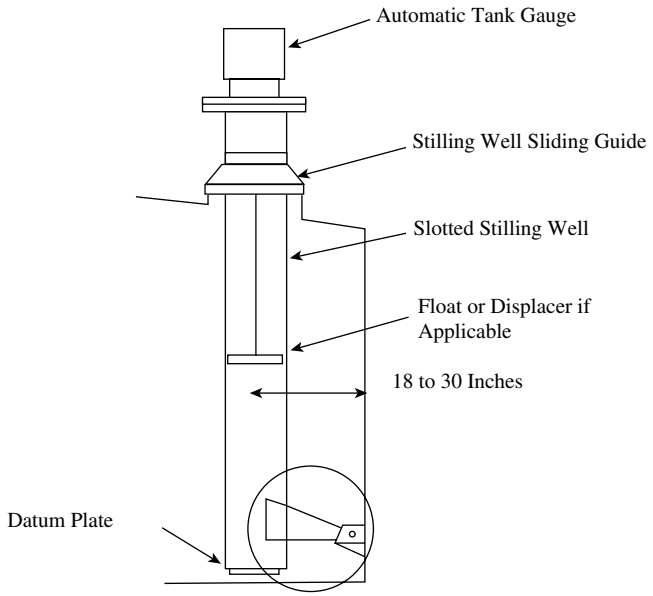

FIG. 3.18f
Shell-supported gauging well for fixed roof tank.

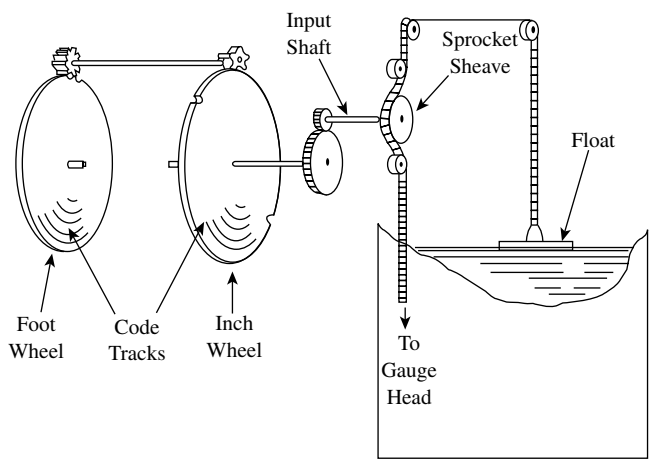

FIG. 3.18g
Schematic of foot and inch wheel drives.

As discussed in Section 3.20, *sonic or ultrasonic* tank gauges also measure an echo, but their accuracy is affected by vapor above the product, and they have not been widely used for tank measurement in the oil industry.

As already discussed in connection with Figure 3.6e, *hydrostatic tank gauges (HTGs)* were developed to convert from volume measurement to the detection of mass. HTGs provide mass measurement, limited only by the accuracy of the pressure transmitters and the tank strapping tables. They are not affected by reference height variation, because they measure innage, but the accuracy of their level measurement drops if the tank contents are temperature or density stratified. The smaller and less expensive hydrostatic interface units (HIUs) represent an improvement over the HTGs.

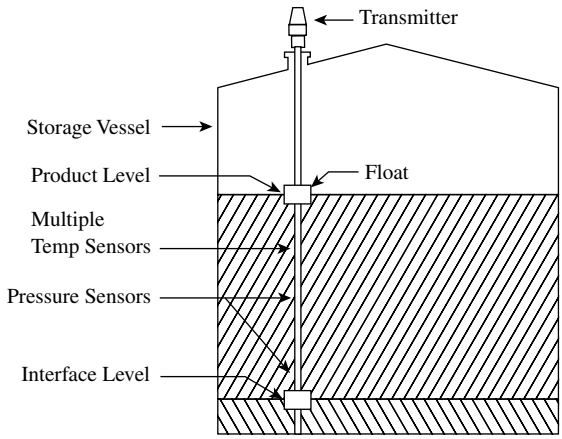

FIG. 3.18h
Level, volume, mass, density, interface, pressure, and temperature can be monitored by the inductively coupled tape system. (Courtesy of the former Sarasota Measurements and Controls.)

If a cable containing the level-measuring element runs from the bottom to the top of the tank, it can be called a *smart cable.* Most types have a float that rides up and down the cable. The best types measure innage, so their accuracy is not affected by changes in reference height, they do not require gauging wells, and (as illustrated in Figure 3.18h) they provide a series of resistance bulbs in the cable to simultaneously measure average temperature. *Capacitance tank gauges* use two capacitance plates. Capacitance varies with level, because the product dielectric constant differs from that of the air or vapor. *Inductive tank gauges* measure level using a digital position signal generated by the inductive interaction with a transponder in the float (Figure 3.18i). *Magnetostrictive tank gauges* measure the time of flight of a torsion wave that pulses up and down a ferromagnetic wave guide, where the wave is reversed by a magnet in the float. *Resistive tank gauges* (see Section 3.15) use a nichrome helix wrapped around a steel core and covered with a Teflon® jacket. The hydrostatic pressure of the product shorts the helix against the core so that the resistance varies with the product level.

Hybrid level gauges (as illustrated by Figure 3.6e) are still evolving and, in addition to level, can also detect volume, mass, temperature, and density. In this configuration, level and volume are measured by the ATG, and mass is measured by the pressure sensor. The design is still evolving. Hybrids can measure density without sampling or laboratory analysis. Because of the redundant measurements, they also provide some error checking.

ACCURACY

According to Berto,[1] quantitatively, the following error contributions can be expected:

1. The error in manual gauging or the ATG is about ±0.125 in.

© 2003 by Béla Lipták

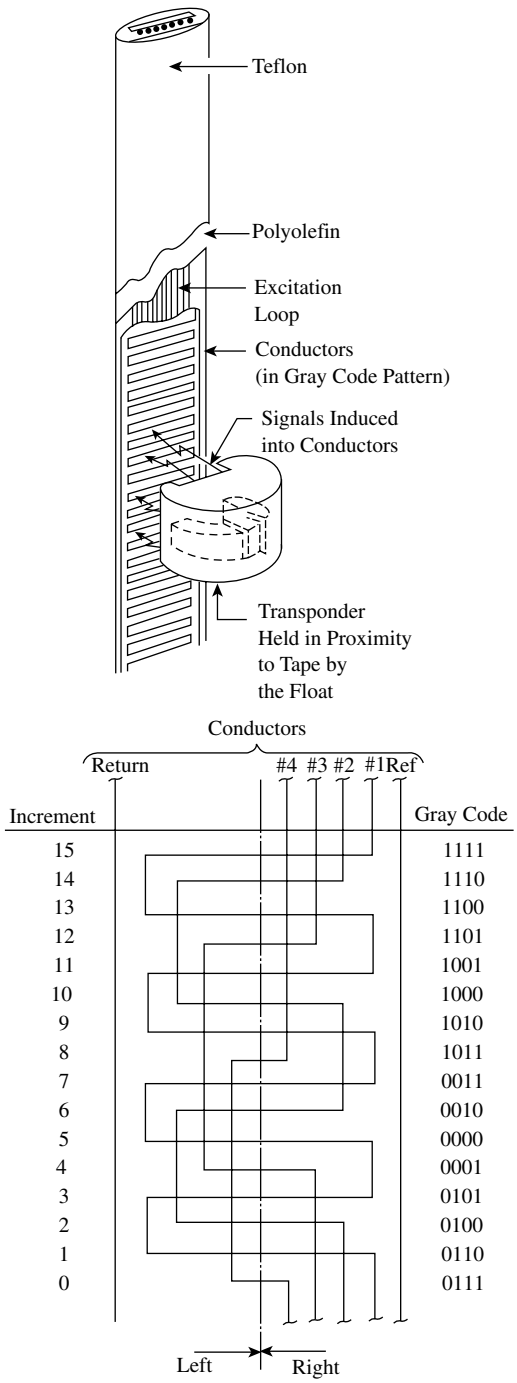

FIG. 3.18i

The inductively coupled tape and float assembly and the arrangement for a 16-increment system. (Courtesy of the former Sarasota Measurements and Controls.)

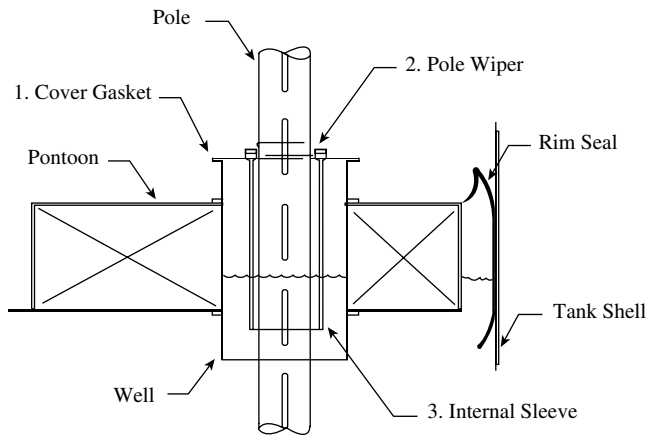

FIG. 3.18j

The improved slotted gauge pole.[1]

2. The error in the tank capacity tables, including the effect of tank tilt and hydrostatic pressure, is about ±0.5 in.
3. Tank shells expand as a result of liquid head as a full tank takes the shape of a barrel. This effect is normally included in the calculation of the tank tables, but the accompanying movement of the lower datum plate or the upper reference point is not included.
4. Tank bottom movement results in undermeasurement (+0.25 in.). This varies with the compressive strength of the soil under the tank.
5. Incrustation may be significant with heavy or waxy products stored in small tanks. It results in overmeasurement.
6. Movement of the gauging well can be ±1 in. Floating roof tanks should be fitted with slotted gauging wells (Figure 3.18j). Vertical movement of the gauging well movement affects outage measurements and causes an error when converting measured outage to innage.
7. Datum plate movement affects innage measurements by ±0.5 in. When a tank is filled and the shell takes a barrel shape, the bottom bulges up adjacent to the shell. Farther inward, the bottom moves down because of hydrostatic pressure. The datum plate should be located 18 to 30 in. from the shell to minimize the effect of bottom movement.
8. Thermal expansion of the tank shell and the gauging well can amount to ±0.125 in. Thermal expansion causes two errors, because both the tank diameter and the tank height change. Tank capacity tables are calculated for one temperature (60°F). They do not correct for the thermal expansion of the tank shell. The amount of error depends on the product temperature and the ambient temperature.
9. Another serous source of errors is poor temperature measurements. With heavy oils, it takes 45 min for a manual temperature measurement using a cup-case, even if the thermometer is continuously moved up and down. This can result in 2 to 3° of error. ATGs are provided with high-performance average temperature sensors, but at a cost of about $2000.
10. In crude oil level measurement, a major error source is the method used in determining the sediment and water content of the oil. Manual sampling is unacceptable,

© 2003 by Béla Lipták

because it does not provide a representative sample and does not necessarily analyze the sample correctly. Therefore, automatic samplers are recommended.

TRADITIONAL TAPE LEVEL SENSORS

Tape level detectors can be furnished with local or remote readouts and can facilitate inventory control in multiple tanks and silo installations. Liquid level detector tape gauges include the conventional tape gauges (a wire-guided float or displacer), the inductively coupled float, and the wire-guided thermal sensor. The surface-sensing tape gauges (plumb-bobs) used in solids service have a resolution of about 0.1 ft (30 mm) and an error of about 0.2 ft (60 mm). This accuracy on solids level measurement is usually acceptable, as other variables (such as changes in the angle of repose, bridging, rat-holing, and the change in the shape of solids level as the operation is changed from filling to discharging) all cause errors in the correlation between level and volume. As a result of these uncertainties, very precise measurement of the level at a particular point is of no great value.

WIRE-GUIDED FLOAT DETECTORS

Figure 3.18k shows a wire-guided float detector that has a tape connection to a ground reading assembly. This detector has evolved from the float-operated gauge board. The system shown here is suitable for tanks having an operating pressure to 30 PSIG (0.2 MPa) and a height of up to 60 ft (18 m), although other designs are available that are rated to 300 PSIG (2 MPa). The float is about 15 in. (381 mm) in diameter and can be made of aluminum, stainless steel, or other alloys; it can be hollow or filled with materials such as foam glass. To direct the float, guide wires are connected to top and bottom anchors. The top anchors are normally spring loaded to maintain constant tension on the wires; the bottom anchors are tank clips.

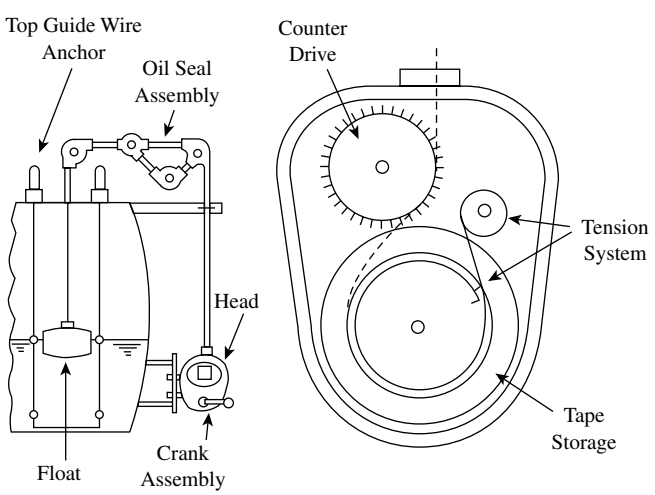

FIG. 3.18k
Wire-guided float detectors and detail of head.

A tape runs from the connection on the top of the float, over sheave assemblies, and down to the gauging head, which is outside the tank at eye level. The detail in Figure 3.18k shows the tape passing through an oil seal assembly. This seal can be used for gauge head corrosion protection or to prevent product condensation in the head, provided that the tank is operated at very close to atmospheric pressure. If the tank is pressurized, it is usually desirable to fill the head with the product, particularly if the product is clean and lubricating.

The tape, which is perforated, enters the gauge head, runs around a sprocketed counter drive, and is taken up on the tape storage reel. Tape tension is maintained by a secondary (spring-wound) take-up device. The shaft on the counter drive rotates as the float moves the tape up and down, and, by proper gearing, this rotary motion can be used to drive a feet-and-inches or metric readout. The counter is located outside of the gauge head, preventing exposure to any liquid fill in the head that may be present.

For lower-pressure designs, the shaft extends out of the gauge head through a gland, whereas, for pressures above 30 PSIG (0.2 MPa), the shaft motion is normally taken out of the head through a magnetic coupling. The gauge head can be equipped with several optional devices. A crank assembly mounted on the head permits lifting the float out of the process. Material buildup on the float that hinders smooth operation may make this necessary. Often, the float can be freed by lifting and lowering it. The head also may be equipped with a variety of switch configurations for high and low level alarms or for control-circuitry actuation.

Figure 3.18b shows installation details for wire-guided floats in low-pressure tanks. Figure 3.18l shows a high-pressure installation rated to 300 PSIG (2 MPa). At the higher pressures,

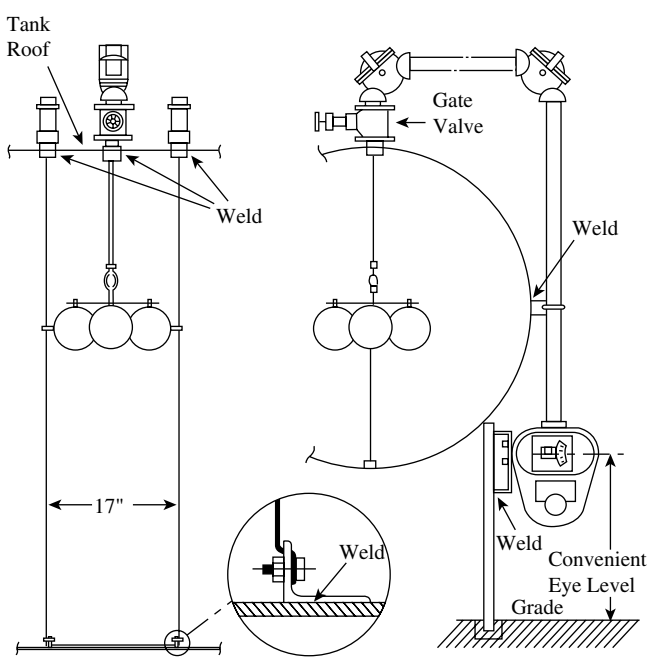

FIG. 3.18l
Wire-guided float detector installation for high pressure tanks.

© 2003 by Béla Lipták

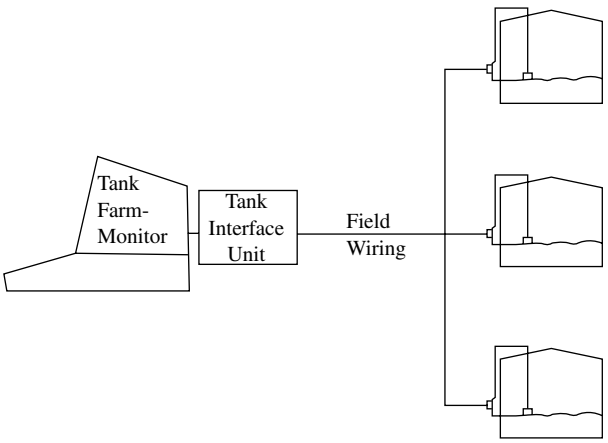

FIG. 3.18m
The use of tank farm unit controllers increases the safety of operation.

the flat, circular float design is no longer suitable, and one or more spherical floats are used. Connections for a high-pressure installation should be flanged, including those for the top anchor assemblies. Another feature to note in Figure 3.18l is the gate valve with rubber plug that is installed at the tank entry, allowing removal of the gauge head without tank depressurization.

One common problem with these level devices is tape hang-up. This can occur if the long guide pipes are not perfectly vertical and the tape rubs against the inside of these pipes. If dirt or corrosion is also present, the resulting friction can hold the tape in place while the float is moving. This has caused accidents in cases where tanks controlled using tape level gauges overflowed because the tape was stuck. One recommended precaution is to install a separate high-level switch.

Another recommended precaution is to use a microprocessor-based tank-farm operations controller as an added level of safety (Figure 3.18m). This unit controller can continuously monitor all operations that occur on the tank farm. It knows the capacity of each tank and the pumping rate of each pump, so it can check whether, under a particular filling operation, the level in the tank should be rising at a particular rate. If it should not (because the level transmitter is defective), the controller can sound an alarm or shut the system down.

Encoding

The wire-guided float detector level must be converted to an electrical signal by using the shaft rotation of the gauge head to drive encoding discs. Figure 3.18g illustrates one conversion method. The input shaft drives the "inches" wheel, and the gear assembly at the left of the sketch drives the "foot" wheel. For purposes of this sketch, the level tape sheave and shaft are set up to rotate 180° for each foot of level change. As the inch wheel completes one-half of a revolution, it steps the foot wheel up or down, corresponding to rising or falling level. Stepping of the foot wheel occurs when the notches on the inch wheel pass the gear. The wheels are coded so that a rotation corresponding to a 0.01-ft level change presents a new and unique digital code to the code take-off assembly. Codes are available for foot, inch, and fraction, or meter and millimeter readouts. Since the principle of operation is the same for all, only the foot, tenths, and hundredths will be covered.

The wheel has a number of concentric tracks on it, each track representing one digit of the digital word. The tracks are designed to produce the zero or one information needed for the digital word. This can be done in several ways. One way is to plate portions of the track with a conductor and allow a conducting brush to ride on the track. If the brush is on a conducting portion of the track, a current path will be formed, and a one will be produced. If the brush is on a nonconducting part of the track, the current path will not be formed, and a zero will be produced. Another encoding method is to use optical coupling. Portions of the tracks are plated with a reflecting material, and a light is beamed on the tracks. If the beam hits a reflecting portion of the track, a light-sensitive transistor conducts, thereby producing a one. If the beam hits a nonreflecting portion, the transistor does not conduct, and a zero is produced.

Figure 3.18n shows how a modified gray code could be used to produce a digital word that is unique for a given wheel position and thus a given level. (Only 8 tracks are shown instead of the 16-track arrangement that would be required for a ±0.01-ft (0.3-cm) resolution over an 80-ft (24.3-m) span. Also, the tracks are shown as being linear whereas, in the actual configuration, they would be on closed circular tracks. The shaded areas represent conducting portions of the tracks, and the light portions are nonconducting. Thus, if the float were at a level corresponding to 6.4 ft, the code produced would be 10100110. The digital code is produced continuously. It is read by the remote device when the tank gauge is addressed as described in the preceding paragraphs.

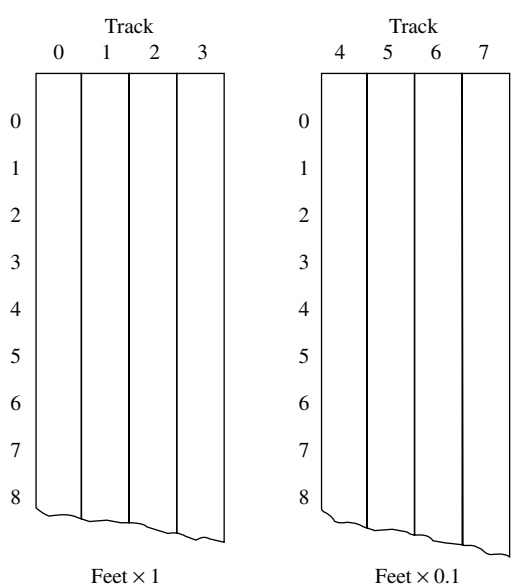

FIG. 3.18n
Encoding with a modified gray code.

© 2003 by Béla Lipták

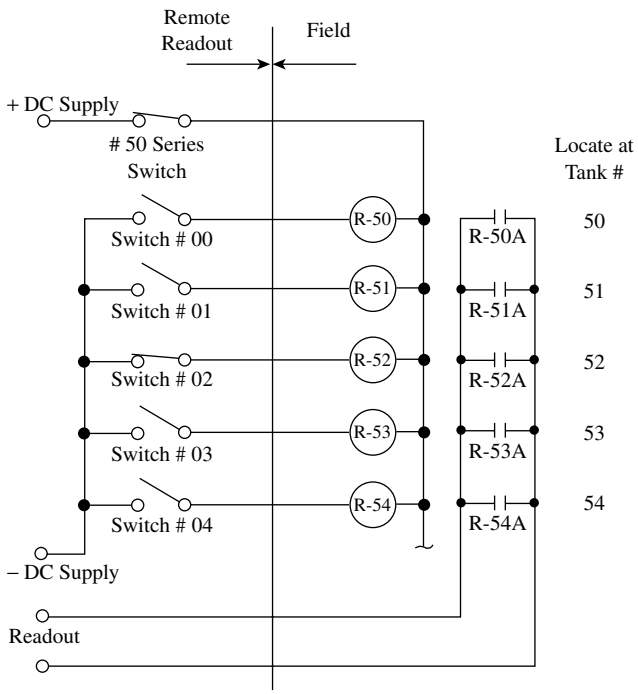

FIG. 3.18o
Multiple tank system cabling.

Temperature Compensation

Because liquids expand when heated, variations in the temperature of the material in the tank will affect the level reading. For this reason, it is quite common to take a temperature measurement of the liquid at the same time that the level is gauged, using the data to make a level correction based on temperature change. Equipment is available to accomplish this automatically. The resistance temperature detector (RTD) sensors at the various tanks can be switched into the remote readout at the same time that the level measurement is being made, using the same type of wiring arrangement shown in Figure 3.18o. A wide array of remote temperature and level readout equipment is commercially available. The simplest is the manually operated unit with pushbutton random access to all tanks. These units generally display the number of the tank called, its level, and its temperature. The more complex systems are microcomputer or minicomputer based and can have automatic logging of temperature-compensated level plus other features such as high- and high-high-level alarm. Most systems can be readily interfaced with larger computers.

INDUCTIVELY COUPLED TAPE DETECTOR

Figure 3.18h illustrates a fixed tape, float-actuated level measuring device. The tape is suspended from the roof of the tank and is anchored to the bottom. The tape is used to guide a float that contains an inductively coupled transducer. The tape consists of a steel ribbon and a number of insulated conductors encapsulated in a Teflon jacket. In addition to providing mechanical strength, the steel tape is used to provide power to the transducer in the float through inductive coupling. At short intervals, this primary coupling is interrupted, and a secondary inductive coupling from the transducer to the conductors on the tape is established.

The conductors are arranged on the tape in coded patterns so that each 0.1-in. (2.5-mm) increment has a unique code. The receiver mounted at the top of the tank reads which conductors have been inductively coupled. From this information, it can determine where along the tape the float is located and thus the elevation of the liquid level. The float is Teflon coated, and the tape-to-float clearance is approximately 0.25 in. (6.3 mm) to minimize float sticking and material buildup on the tape. The receiver can be furnished to transmit an analog signal proportional to level, or it can transmit the digital signal that has already been produced by the tape-and-float assembly, which has a resolution of 0.1 in. (2.5 mm).

The conductors on the tape are arranged to produce a gray code digital word. In the gray code, only one digit in the word changes from one word to the next, so only one conductor must change its position from one 0.1-in. (2.5-mm) increment to the next. The number of conductors required increases with the span of the liquid level to be measured. The span covered is equal to 2^N, where N is the number of conductors. Thus, if four conductors are used, the span would be 16 increments, or 1.6 in. (40 mm). If 14 conductors are used, the span would be 16,384 increments, or 135 ft (41 m). In addition, each system requires a reference conductor and a return conductor.

Figure 3.18i describes, in schematic form, how four conductors might be arranged on the steel tape to produce the gray code digital word for a 16-increment measuring system. If the conductor is on the right-hand side of the tape, it is inductively coupled to the transducer in the float; if on the left, it is not. The reference wire tells the receiver which side of the tape is the right-hand side. The return conductor is common, completing the circuit for all conductors. As shown in the figure, if the float is at increment 7, conductors 1 and 2 will be inductively coupled, and conductors 3 and 4 will not. Thus, the gray code digital word produced is 0011, which is unique for the particular increment. As previously noted, each additional conductor doubles the preceding span; adding a fifth conductor to the arrangement shown in Figure 3.18i would enable measurement more than 32 increments; a sixth conductor would enable measurement over 64 increments, and so on.

The inductively coupled tape level system is intrinsically safe. In addition to accurately measuring the level, it can also determine the density of the process fluid and, based on that information, calculate the mass of the tank contents. Sensors are also provided for pressure, temperature, and interface measurement.

© 2003 by Béla Lipták

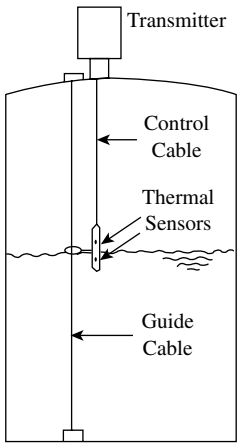

FIG. 3.18p
Wire-guided thermal sensor. Heavy sensor can also provide temperature profile.

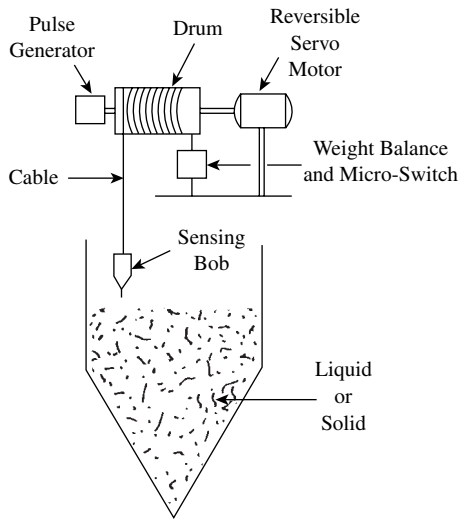

FIG. 3.18q
Surface sensor.

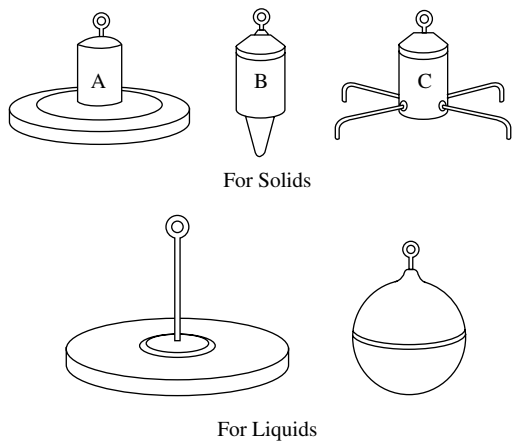

FIG. 3.18r
Sounder designs.

WIRE-GUIDED THERMAL SENSOR

Because liquid conducts heat better than does vapor, the liquid surface is bracketed by the two vertically displaced sensors. The lower one is cooler than the upper one. Figure 3.18p gives an installation detail for a wire-guided thermal sensor. The sensor, which is heavier than the liquid being measured, is suspended from an armored control cable and guided by a wire attached to the top and bottom of the storage vessel. The control unit detects the position of the sensor relative to the liquid level and issues step-up or step-down commands to the control cable take-up wheel until the lower sensor is in the liquid and the upper sensor is in the vapor. The system remains at rest as long as these conditions are met. When the sensor is moving, each stepping command adds or subtracts a length unit from the previous controller reading so that sensor position, and thus level, is accurately known.

The unique feature of this instrument is that the sensor is heavier than the liquid, allowing the unit to be lowered to the tank floor so that the control and counter circuitry can be zeroed. The controller contains a cable tension sensor to signal when the level sensor has hit bottom. A controller subroutine permits automatic zeroing. The sensor also can be equipped with a temperature detector to provide a thermal profile of the tank material. This is useful for accurate correction of level measurement and can also be used to detect temperature inversions in cryogenic services.

SOLIDS LEVEL DETECTORS

Although the gauges described here were originally developed for solids level detection, they can also be used for liquid level detection if equipped with a properly designed sounder. As shown in Figure 3.18q, a sounder is suspended from the winding drum. The wire tension is continuously detected by the weight balance. A reversible servomotor rotates the drum when a starting signal is received, and it releases the wire until the sounder strikes the solid (or liquid) surface. When this occurs, the tension in the wire slackens, causing the weight balance to actuate a microswitch. After the momentary slackening of the cable, the microswitch reverses the motor and returns the sensing bob to its original reference position.

The shape of the sensing bobs (or sounders) varies with the process fluid. Figure 3.18r illustrates some of the typical shapes used on both liquid and solids services. On solids with less than 20 lbm/ft^3 (320 kg/m^3), the type A sensing bob is used. For higher densities, the type B is recommended, and, for coarser solids, the type C design is the appropriate choice.

A pulse generator is coupled to the system to provide an input signal to the counter, which counts down from a preset maximum reference value in steps. When the sounder strikes

© 2003 by Béla Lipták

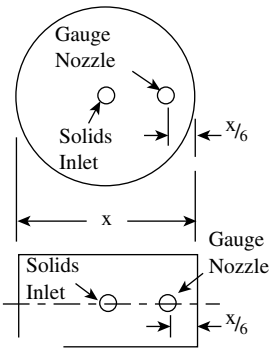

Relative locations of solids inlet and gauge nozzles for rectangular and circular bin cross-sections

FIG. 3.18s
Surface sounder installation for solids.

the product surface, the solids level is displayed and, at the same time, the counter is automatically disconnected from the pulse generator. The reading stays on the counter until the next measurement. On receipt of a new start signal, the counter is reset to the maximum reference value, and the measurement cycle is repeated. There are several ways in which the amount of cable paid out can be converted to pulses. In one design, the cable pays out over a measuring wheel with a 6-in. diameter. The measuring wheel drives a five-lobe cam that trips a stationary cam each time a lobe passes by. In this way, ten contact closures are produced for each foot of cable paid out.

In another, higher-resolution design, the measuring wheel drives a disc that has 50 radial slots around its circumference. Here, the slots are counted by a light beam and a light-sensitive transistor, and 100 pulses are generated for each foot of cable "paid out." In either case, the level measurement reference is the top of the tank.

In dust-filled atmospheres, a solenoid-operated pneumatic cleaning assembly should be added to ensure reliable operation. As shown at the top of Figure 3.18s, the relative locations of the gauge nozzle and the solids inlet nozzle are important, because the sounder is used to take an average level reading. At no time should there be any contact between the filling system and the sounder. If the inlet nozzle is in the center of the bin, the surface of granular products will tend to take the shape of a cone. The gauge, therefore, should be located to obtain to obtain average level. As shown in the sketch, this requires the nozzle to be one-sixth of the diameter from the bin wall for circular bins. The sketch on the bottom of Figure 3.18s shows the proper location for installations in rectangular bins.

CAPACITANCE AND DISPLACER TAPE DEVICES

At least two other tape level detector designs are available. In one, the sensor is suspended on a cable and held a short distance above the liquid level. The distance is sensed by a proximity-type capacitance probe (Figure 3.3f). The control unit monitors the capacitance between the sensor and the liquid level, repositioning the sensor as the level changes. Sensor position, and thus level, is determined by measuring the amount of cable that has been paid out. In this respect, it is the same as the wire-guided thermal sensor previously described.

The second design uses a displacer mounted on the end of a cable. In this design, the displacer is continuously repositioned so that it is always immersed the same amount, say, to 50% of its 0.1-in. (2.5-mm) thickness. Level is determined by the amount of cable paid out. The displacer design has cable weight compensation but is not compensated for changes in liquid density. Both the capacitance and the displacer designs are installed in stilling wells.

MULTIPLE-TANK SYSTEMS

As previously mentioned, gauges covered in this section are used in conjunction with remote manually operated and automatically operated multiple-tank gauging systems. Multiple gauging requires cables from each tank to the remote readout. For wire-guided float detectors, the shaft position on the gauge head must be transduced to an electrical signal. The objective in designing the cable system is to wire up all the tank gauges with as few wires as possible, which means that wires must be shared.

Figure 3.18o shows a wiring system used to obtain a level reading for any one of five tanks. Eight wires are used. By closing the tens switch #50 (at the top of the figure), one-half of the circuit to the relays at tanks 50 through 54 has been closed. Closure of any unit switch #00 through #04 will complete a circuit through the relay coil associated with the tank that is to be remotely metered. In the figure, switch #02 is closed; therefore, relay R-52 is energized, and relay contact R-52A is held closed. The remote readout can now obtain the level data that is available at the gauge head at tank 52. This technique allows a great number of tanks to be remotely monitored with relatively few wires. For example, a 100-tank installation can be monitored using 22 wires. The 22 wires would be composed of 10 for the tens position, 10 for the units position, and 2 for the signal. A second group of 100 tanks can be picked up by adding only two more wires, one for the 100s-series tanks and one for the 200s-series tanks.

When the distance from the tanks to the remote readout is long, a satellite multiplexer may be considered. The satellite multiplexer collects level information for tanks in the immediate vicinity and transmits it, on demand, over two wires to the remote readout. The satellite multiplexing system might be used for a pipeline transmission installation where the various bulk storage facilities are hundreds of miles apart. The switches shown in Figure 3.18o constitute a manually operated multiplexer. These switches can be operated by a data logger or by a computer, making inventory monitoring completely automatic.

© 2003 by Béla Lipták

The reason for monitoring a tank farm with as few wires as possible is to reduce installation costs. In so doing, the gauge head relays and much of the wiring are run in parallel. This means that a short to ground, an open wire, or a malfunctioning gauge head can disrupt the entire system. Many tank farms are located in corrosive and/or humid environments. Therefore, particular care should be taken in the design and installation of the cable system, especially at the terminals in the gauge heads and junction boxes. Lightning strikes can be another source of trouble, given that most tank-farm cabling systems are run overhead. Surge protection should be installed at each gauge head and at the remote readout. Associated loggers and computers should be electrically isolated. As an aid to troubleshooting a crippled system, isolating switches should be installed so that blocks of gauges can be separated from the system to enable a more rapid location of the fault.

CONCLUSION

Flow meters and provers offer the most accurate ways to measure standard volumes of liquids. Tank measurement is much more inaccurate when measuring small parcels. In custody transfer of full or nearly full tank volumes, manual gauging is preferred in the U.S., and ATGs are preferred in Europe. In either case, the inherent tank accuracy is a factor, because the filling of a large tank causes the bottom to sink, the shell to bulge, and the top to sink, and changes in temperature also cause changes in tank dimensions.

Automatic tank gauging systems are found in almost all tank farms of any size. They enable inventory monitoring at a given time each day. The wire-guided float tape gauge systems are most common on the existing tank farms (Table 3.18a) on liquid services. The design of the remote metering portion of these systems has been improved markedly over the past years, and these systems can be expected to perform satisfactorily if they are properly installed and maintained. To protect against tank-farm accidents such as overfilling, they should be backed up with high-level switches, and computer monitoring should be provided to detect for sensor failures resulting from float or tape hang-up.

The inductive tape-and-float systems and the wire-guided thermal capsule systems are more expensive and do not have as great a degree of field exposure as the wire-guided float types. (Table 3.18a). However, the tape-and-float system has fewer moving parts and therefore requires less maintenance. The wire-guided thermal capsule can be zeroed and can also be used for temperature profiling. Some users regard the in-tank electrical circuitry required by these latter designs as a drawback, but intrinsically safe designs should alleviate that concern.

The surface sensor design has been used for some time for solids level measurement. There have been reports that the sensor can become buried or detached from the take-up cable, contaminating product or ruining downstream equipment. A more rugged cable and sounder design should overcome this problem. The surface sensor is not highly recommended for liquid level applications, but it is acceptable for solids level measurement if an error of a couple of inches is acceptable.

Reference

1. Berto, F. J., Review of tank measurement, parts 1 and 2, *Oil & Gas J.,* March 3 and March 10, 1997.

Bibliography

Avolio, G., Encoders, resolvers, digitizers, *Meas. Control,* September 1991.
Bahner, M., A practical overview of continuous level measurement technologies, *Flow Control,* June-July 1997.
Berto, F. J., Control program halves crude losses, *Oil & Gas J.,* December 27, 1982.
Berto, F. J., Methods for volume measurement using tank gauging devices can be error prone, *Oil & Gas J.,* March 13, 1989.
Berto, F. J., Hydrostatic tank gauges accurately measure mass, volume, and level, *Oil & Gas J.,* May 14, 1990.
Berto, F. J., Gauging data pose question on stability of reference gauge heights, *Oil & Gas J.,* July 29, 1991.
Berto, F. J., Technology review of tank measurement errors reveals techniques for greater accuracy, *Oil & Gas J.,* March 3, 1997.
Control level under fouling conditions, *Hydrocarbon Processing,* November 2000.
Cornane, T., Continuous level control, *Measurement and Control,* April 1997.
Detecting tank levels remotely, safely, *Chemical Process.,* July 1970.
Entwistle, H., Survey of Level Instruments, ISA Conference, Anaheim, CA, Paper #91-0484, 1991.
Floats on pulleys keep track of tank levels, *Machine Design,* February 12, 1976.
Glenn, L. E., Tank gauging—comparing the various technologies, in *ISA Conf. Proc.*, Anaheim, CA, Paper #91–0471, 1991.
How can we measure level of petroleum sludge? *Control,* August 1999.
Hughes, T. A., *Measurement and Control Basics,* 3rd ed., ISA, Research Triangle Park, NC, 2002.
Johnson, D., Level sensing in hostile environments, *Control Engineering,* August 2001.
Lerner, J., Continuous level measurement: an introduction to 16 basic types, *Control,* November 1990.
Mei, K. W., Automatic tank gauges can be used for custody transfer, *Oil & Gas J.,* November 13, 1989.
Mei, K. W., Accurate automatic temperature measurement reduces tank volume errors, *Oil & Gas J.,* July 20, 1992.
Mei, K. W., Unslotted gauge wells cause tank-level measurement errors, *Oil & Gas J.*, January 30, 1995.
Nyce, D. S., Tank gauging advances, *Fuel Technology Management,* January 1997.
Piccone, R. P., Combining technologies to compute tank inventory, *Sensor,* October 1988.
Sivaraman, S. and Thorpe, W. A., Measurement of tank-bottom deformation reduces volume errors, *Oil & Gas J.*, November 3, 1986.
Sivaraman, S. and Holloway, C. J., Method measures cylindrical storage tank reference height variations, *Oil & Gas J.*, December 12, 1988.
Sivaraman, S., Field tests prove radar tank gauge accuracy, *Oil & Gas J.*, April 23, 1990.
Sivaraman, S. and Sheppard, R., Minimum transferred volume necessary for accuracy when determining custody transfer volumes by tank gauging, *Petroleum Rev.*, August 1991.
Van de Kamp, W., *The Theory and Practice of Level Measurement,* 17th ed., Endress+Hauser, Greenwood, IN, 2001.
Waterbury, R. C., Liquid level measurement 101, *Control,* November 1998.

© 2003 by Béla Lipták

3.20 Ultrasonic Level Detectors

D. S. KAYSER (1982) **B. G. LIPTÁK** (1969, 1995)
J. E. JAMISON (2003)

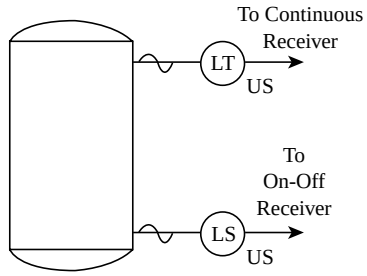

Flow Sheet Symbol

Applications

Applications are wetted and noncontacting switch and transmitter applications for liquid level or interface and solids level measurement. They are also used as open-channel flow monitors. Advantages: generally, no contact with the product; suitable for various liquids and bulk products. Disadvantages: product must not produce too much surface foam; not suitable for extremely high pressures and temperatures; not applicable in vacuum service applications.

Design Pressure

Probe switches are used up to 3000 PSIG (207 bars = 20.7 MPa); transmitters are usually used for atmospheric-type service up to 60 PSIG (4.1 bar), but some special units are available for use up to 250 PSIG (17.2 bars)

Design Temperature

Switches from –100 to 300°F (–72 to 149°C) with special units to 750°F (399°C); transmitters from –40 to 302°F (–40 to 150°C)

Materials of Construction

Aluminum, type 304/316 stainless steel, titanium, Hastelloy® B/C, Monel®, Kynar, PVC, CPVC, Teflon (TFE), Tefzel®, polypropylene, PVDF, epoxy

Ranges

For tanks and silos (pulse usually travels in vapor space), up to 230 ft (70 m) for some special designs and up to 50 ft (15.3 m) for most standard systems. For wells (usually submerged), up to 2000 ft (600 m).

Inaccuracy

For a horizontal probe switch, 0.040 in. (1 mm). For transmitters, the error varies from 0.2 to 2% of full scale depending on the dust and dew in the vapor space and on the quality of the surface that serves to reflect the ultrasonic pulse.

Costs

Level switches cost from $150 basic to $950 (smart, multipoint); transmitters cost from $650 to $2500, with an average cost around $1200

Partial List of Suppliers

AMETEK Drexelbrook Company (www.drexelbrook.com)
Babbitt International Inc. (www.babbittlevel.com)
Bindicator Co. (www.bindicator.com)
Bürkert Contromatic Corp. (www.burkert.com)
Cole-Parmer Instrument Co. (www.coleparmer.com)
Consilium US Inc. (www.consiliumus.com)
Contaq Technologies Corp. (www.contaq.com)
Cosense Inc. (www.cosense.com)
Delavan Process Instrumentation, an L&J Terminologies Company (www.ljtechnologies.com)
Delta Controls Corp. (www.deltacnt.com)
Devar Inc. (www.devarinc.com)
Dwyer Instruments Inc. (www.dwyerinstruments.com)
EDO Electro-Ceramic Products (www.edocorp.com)
Electronic Sensors Inc. (www.leveldevil.com)
Endress+Hauser Inc. (www.us.endress.com)
Fischer and Porter, a Unit of ABB (www.abb.com/us)

© 2003 by Béla Lipták

Gems Sensors Inc. (www.gemssensors.com)
Gordon Products Inc. (www.gordonproducts.com)
Greyline Instruments Inc. (www.greyline.com)
HiTech Technologies Inc. (www.hitechtech.com) (fly ash applications)
Honeywell (www.honeywell.com/acs/cp)
Hyde Park Electronics Inc. (www.hpsensors.com)
Introtek (www.introtek.com)
Inventron Inc. (www.inventron.com)
Kay-Ray/Sensall, subsidiary of TN Technologies Inc. (www.thermo.com)
Kistler-Morse Corp. (www.kistlermorse.com)
Kobold Instruments Inc. (www.koboldusa.com)
Krohne America Inc. (www.krohne.com) (sludge interface)
Magnetrol International (www.magnetrol.com)
Markland Specialty Engineering Ltd. (www.sludgecontrols.com) (sludge level)
Massa Products Corp. (www.massa.com)
Milltronics Inc. (a Division of Siemens) (www.milltronics.com)
Monitek Technologies Inc. (part of Metrisa Inc) (www.monitek.com)
Monitor Technologies LLC (www.monitortech.com)
Monitrol Mfg. Co. (www.monitrolmfg.com)
Ohmart/VEGA (www.ohmartvega.com)
Omega Engineering Inc. (www.omega.com)
Penberthy (www.penberthy-online.com)
Pepperl+Fuchs (www.pepperl-fuchs.com)
Solartron Mobrey Ltd. (www.solartronmobrey.com)
Thermo MeasureTech Inc. (www.thermo.com)
TN Technologies Inc. (www.tn-technologies.com)
Ultrasonic Arrays Inc. (www.ultrasonicarrays.com) (thickness, texture, surface reflectivity)
Vega B.V. (www.vega.com)
Zevex Inc. (www.zevex.com)

Sonic (up to 9500 Hz) and ultrasonic (10 to 70 kHz) level switches operate either by the absorption (attenuation) of acoustic energy as it travels from source to receiver or by the frequency change of a vibrating diaphragm face, oscillating at 35,000 to 40,000 Hz. Ultrasonic level transmitters operate by generating an ultrasonic pulse and measuring the time it takes for the echo to return. If the transmitter is mounted at the top of the tank, the pulse travels in air (at a speed of 1087 ft/sec at 32°F, or 331 m/sec at 0°C); therefore, the time of travel is an indication of the depth of the vapor space above the liquid in the tank. If the transmitter is mounted on the bottom of the tank, the time of travel reflects the depth of liquid in the tank, and the speed of travel is a function of what that liquid is. In the case of water at 77°F (25°C), an ultrasonic pulse travels at 4936 ft/sec (1505 m/sec).

THE NATURE OF ULTRASOUND

To understand the capabilities and limitations of ultrasonic instruments, one must understand the conditions that determine the characteristics of sound: temperature, reflection, propagation, and absorption. Temperature compensation is essential in ultrasonic level measurement, because the velocity of sound is proportional to the square root of temperature and, in case of air, it changes by about 2 ft/sec (0.6 m/sec) for each degree Celsius change in temperature. The speed of travel rises with temperature, and it amounts to about 0.1% per degree Fahrenheit (0.18% per degree Celsius).

To measure the time of travel of the echo of an ultrasonic pulse, it is essential that some of the sonic energy be reflected. Liquids as well as solids with large and hard particles are good reflectors. Fluff and loose dirt have poor reflecting characteristics, because they tend to absorb the sonic pulse. It is also important that the reflecting surface be flat, because the angle of reflection equals the angle of incidence. Therefore, if the sonic pulse is reflected from a sloping surface, its echo will not be directed back to the source, and the round-trip travel time (*time of flight*, or *TOF*) will not accurately reflect the vertical distance. Irregular surfaces result in diffuse reflection, in which only a small portion of the total echo travels vertically back to the source.

The travel (propagation) of sound results in its dispersion (loss of intensity). The intensity of sound decreases with the square of distance; therefore, the echo becomes exponentially weaker as the range of the instrument is increased. The decrease in sound energy is caused not only by dispersion (traveling distance) but also by absorption in the substance through which it travels. For example, an ultrasonic (e.g., 44,000 Hz) sound wave traveling in dry and dust-free 60°F (20°C) air is attenuated by 1 to 3 dB for each 3.3 ft (1 m) of travel. It can be seen from the above that an ultrasonic transmitter is subject to many interferences that will affect the strength of the echo. Many of these physical phenomena are

© 2003 by Béla Lipták

beyond the control of the instrument manufacturers, although microprocessor applications help compensate for some of the symptoms of the presence of the phenomena. All the transmitter can be expected to do is accurately compute the round-trip time of flight based on the first segment of the echo, provide temperature compensation or heat if condensation in the transducer is a possibility, and provide a strong and well-focused ultrasonic pulse. It cannot change the reflection, propagation, or absorption characteristics of the process.

Ultrasonic level devices can be used for both continuous and point measurement. The point detectors—for measurement of gas–liquid, liquid–liquid, liquid–foam, or solid–gas interfaces—can be grouped by design into damped sensor or on–off transmitter categories. They also can be categorized by method of packaging as single-element and two-element units. The continuous level detector designs can be categorized as under-liquid sensors and above-liquid sensors. Most designs use a 20 kHz or higher (up to 70 kHz) oscillator circuit as the ultrasonic signal generator. Some designs incorporate filters, discriminatory circuitry in electronics, or software in microprocessors to prevent false readings that might be caused by random noise. Each of these basic design variations will be discussed separately.

LEVEL SWITCHES

Damped Vibration Type

The devices in this category operate on a principle similar to that of the vibrating reed switch (see Section 3.21). As long as the sensor face is in the vapor space of the tank, it vibrates at its resonant frequency but is damped out when the process material contacts it. Some designs incorporate a piezoelectric crystal in the vibrating tip. Figure 3.20a shows some of

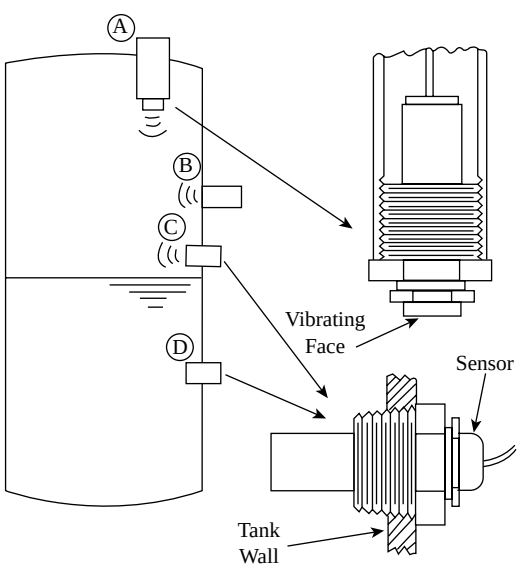

FIG. 3.20a
Dampened ultrasonic sensors.

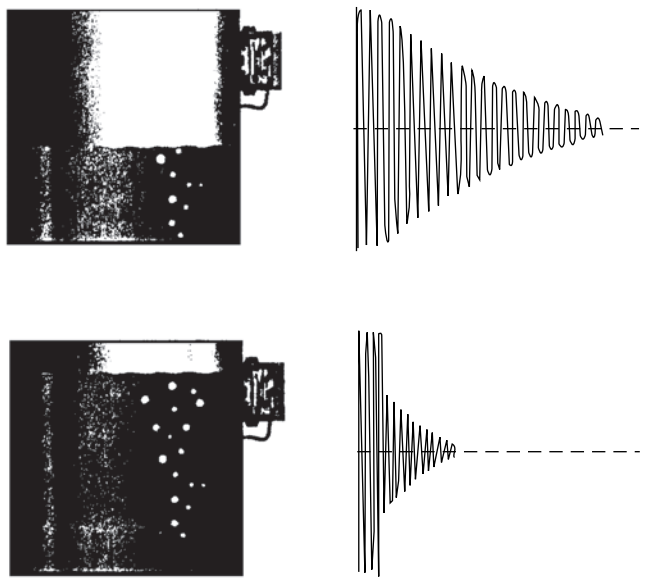

FIG. 3.20b
Dampened vibration ultrasonic level transmitter signals (Design "B" example.)(Courtesy of Endress+Hauser Inc.)

the elements and their installation. Four units are shown in the figure. Design "A" notes the top-entry installation, where the vibrating face is in the vapor space (and is therefore undamped). This design can be repositioned manually or automatically for flexible adjustment of the control point. Design "B" is a unique design in that it does not penetrate the tank wall and thus is not in contact with the process fluid. When the liquid rises to the opposite side of the wall, the transducer is damped (see Figure 3.20b), and a switch action occurs. Designs "C" and "D" show the side-mounted switch elements, one ("D") damped and the other in an undamped condition ("C"). These units are normally limited to liquid service, because the damping effect of solids is insufficient in most cases. Design "B" can be used on any liquid, while the others are limited to clean, noncoating fluids.

Absorption Type

These ultrasonic switches contain transmitter and receiver elements. The transmitter generates pulses in the ultrasonic range, and the receiver detects these pulses if they are transmitted through the medium in which the probe is located. The transmitter and receiver can be mounted on the same probe, or they can be located on the opposite sides of the tank. Figure 3.20c illustrates some variations of this design. Installation "A" shows a design in which the transmitter and receiver are packaged separately. This design transmits in air; the switch will actuate when the ultrasonic sound beam is interrupted by the rising process material. Reflectors are installed to narrow the sonic beam angle when the distance between source and receiver is more than 10 ft (3 m). Installation "B" is a single-probe design in which the pulses generated by the transmitter will be sensed by the detector only

© 2003 by Béla Lipták

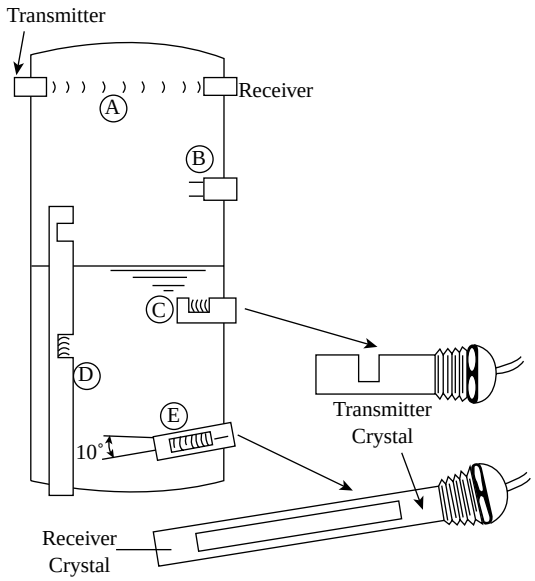

FIG. 3.20c
Transmitting ultrasonic point sensors.

if they are submerged in a non-compressible liquid. The pulses are not transmitted in the vapor space. Design "C," which is similar to "B," transmits only in liquid. When fluid is present in the gap of the single probe, the ultrasonic sound beam is received by the detector in the tip and signals the presence of liquids. Probe "D" is a multipoint variation of "C," allowing the measurement of both high and low levels by the same probe.

Interface Detector

Design "E" is mounted ≈10° from the horizontal, and it can be used for detection of liquid–liquid interfaces. The ultrasonic sound beam generated by the transmitter crystal will be detected by the receiver crystal if the probe is in only one liquid. If an interface is present in the probe cavity, the interface will reflect the signal, preventing it from reaching the receiver. Ultrasonic level switches can also be used to signal when the light layer becomes too thick or too thin. This is achieved by mounting the ultrasonic level switch on a float that continuously follows the total level in the tank.

All of the designs discussed above are applicable to clean liquid service, and none is particularly suitable for slurry or coating services.

For slurry or sludge services, it is desirable to separate the source from the receiver by a more substantial distance (Figure 3.20d) and install them so that the slurry material will drip off when the level drops.

Only design "A" in Figure 3.20c will detect the level of solids. In connection with solids level detection, it should be noted that these devices, being point sensors, will not take into consideration the angle of repose during filling or emptying, nor will they detect rat holes, arches, or bridging.

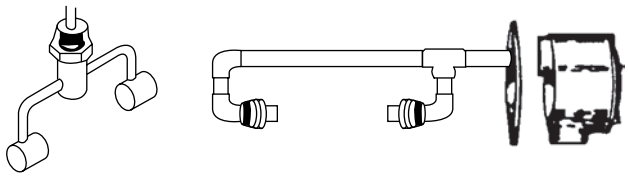

FIG. 3.20d
Top- and side-mounted level switches for sludge or slurry services. (Courtesy of Delavan Inc.)

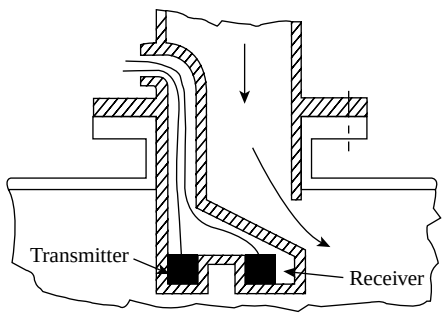

FIG. 3.20e
Ultrasonic filler nozzle.

Figure 3.20e illustrates a special application of ultrasonic level detection for gasoline filling nozzles. The nozzle itself contains a transmitting and receiving element to detect when liquid reaches the nozzle, at which point flow is shut off.

LEVEL TRANSMITTERS

The principle of operation of these units is very similar to that of the echometers used to measure the depth of wells. In that design, a blank shell is fired; the time needed for the echo to return is converted to an indication of the depth. The continuous ultrasonic level detector (SONAR) measures the time required for an ultrasonic pulse to travel to the process surface and back. The source is an oscillator-type ultrasonic speaker, and the receiver, in most designs, is a metal disc that is both electrically and mechanically resonant. The transducer can be mounted either below or above the liquid level.

Figure 3.20f illustrates some of the design features and possible installations. Installation "A" shows a two-element continuous detector (no longer in use) in which the transmitting

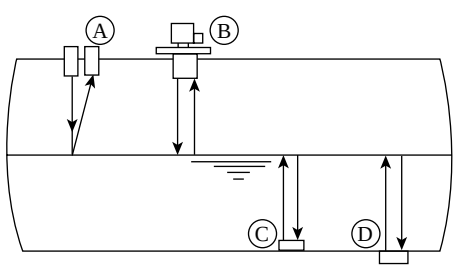

FIG. 3.20f
Continuous ultrasonic level detectors.

© 2003 by Béla Lipták

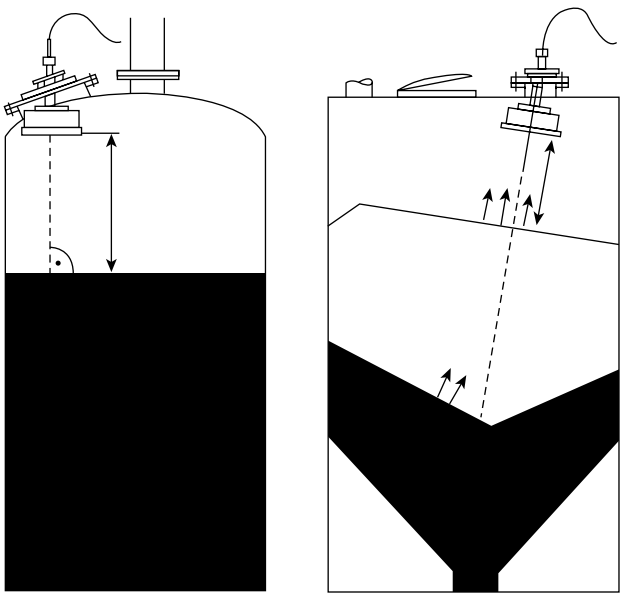

FIG. 3.20g
Adjustable top-mount ultrasonic transmitter for solids level measurement. (Courtesy of Endress+Hauser Inc.)

and receiving transducers are packaged separately. This device transmits in air. The time required to receive the ultrasonic reflection from the surface is the measure of the vapor depth of the space, which is an indirect indication of level. Another, more commonly used version of an "in-air" continuous level system is illustrated in "B." The transducer and receiver are packaged as a single unit. The transducer generates short bursts of ultrasonic energy and, while the acoustic energy is being produced, the receiver is blanked off. When the ultrasonic waves are on their way, the receiver gate is opened to detect the echo. Mounting the transducers in the vapor space has the advantage that the instrument does not contact the process materials, but it has the disadvantage that some energy is lost in traveling through the vapor space.

On liquid level applications, the aiming angle must be within ±5° of the vertical. When measuring levels of solids, the angle of repose should be tested. Current systems incorporate an aiming system to accommodate larger aiming angles (see Figure 3.20g).

In installation "C," the time for the ultrasonic echo is a true indication of level. The transducer can also be mounted on the outside of the tank ("D"), with the added advantage that the sensing element does not penetrate the tank. Design "C" is applicable to continuous detection of clean liquid levels, and designs "A" and "B" also can be used to measure the level of solids. By using several sensors in the same bin, a visual profile can be obtained, showing the angle of repose and indicating if the bin is being filled or discharged.

Figure 3.20h shows an interesting application of the continuous ultrasonic level detector. When hydrocarbons are stored in salt dome wells, the hydrocarbon rests on a brine layer. When additional hydrocarbons are pumped in, the brine is

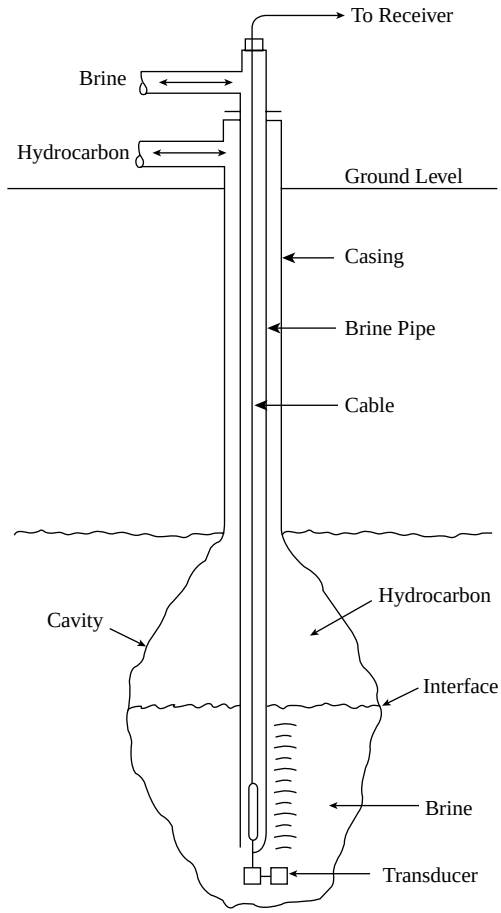

FIG. 3.20h
Interface detector for hydrocarbon storage cavity.

displaced; the hydrocarbons are recovered by displacing them with brine. For reasons of safety, inventory monitoring, and cavity use, it is important to know where the hydrocarbon–brine interface is located. This device is suitable for finding the interface.

MULTI-TANK PACKAGES

"Intelligent," microprocessor-based ultrasonic transmitters can convert the level in cylindrical, horizontally mounted tanks into actual volume of the contents. Microprocessors can be useful in other ways. For example, for better accuracy of measurement, the transducer can be furnished with a fixed target assembly (Figure 3.20i), and the unit can be automatically recalibrated periodically using that reference. Because the length of the reference bar is known, this will give a very accurate reference if the density of the vapor space is uniform and constant.

Microprocessor-based ultrasonic level sensors can be used in a multi-tank or multi-silo configuration (Figure 3.20j). This tends to lower their per-tank unit cost because, through multiplexing, some of the electronic and display equipment can

© 2003 by Béla Lipták

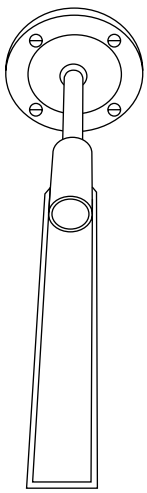

FIG. 3.20i
Level transmitter provided with automatic calibration target. (Courtesy of Inventron Inc.)

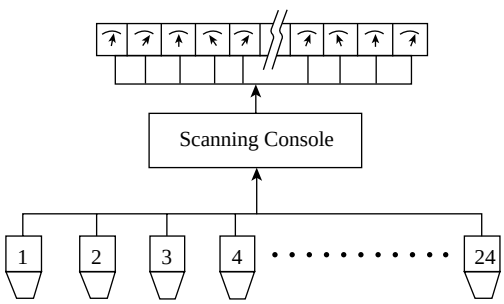

FIG. 3.20j
Ultrasonic silo scanning system.

be shared among the 24 or 48 storage tanks. In such packages, the transmitters are wired to an automatic scanning console, which operates the individual display devices (indicators, recorders, alarms, and so forth). The scanning frequencies are individually programmed to match the requirements of the processes in the different tanks.

RECENT DEVELOPMENTS

In the mid to late 1990s, a number of new developments occurred in ultrasonic level sensor technology. One such improvement involves the continuous monitoring of the depth of sludge blankets. This ultrasonic sensor is provided with a dual-head assembly and a microprocessor, and it is useful in the wastewater treatment industry. Another development was improved filtering capabilities via microprocessor-implemented fuzzy logic technology against interference reflections and against buildups in tanks over time.

Another area of recent advancements involves automatic self-calibration of ultrasonic sensors, which can correct for some of the effects of changing vapor space composition or temperature and can provide more than a single calibration target. The multiple calibration targets are provided in forms of precisely located ridges in a sounding pipe and can result in level measurement inaccuracies within 5 mm over a distance of 30 m.

New techniques in ultrasonic level measurement are revolutionary, utilizing the changes in the speed of sound in the tank wall. According to Lynnworth,[1] this speed does change when the other side of the tank wall is wetted and therefore can be used for level measurement in both the transmission and the echo mode of operation. Such units have been tested in pilot applications.

The mid to late 1990s saw the incorporation of serial data communications links such as RS485, and the HART protocol became available on several manufacturers' systems to link the output data to higher-level systems. In the late 1990s and early 2000s, the use of various digital fieldbus technologies became commonplace as the output signal of ultrasonic level transmitters. FOUNDATION™ fieldbus and Profibus PA and DP are the main fieldbuses currently being employed.

Another interesting and recent development in the ultrasonic or time of flight technology is that several manufacturers have designed their systems to allow the use of the same transmitter between both ultrasonic and microwave (RADAR) technologies (see Sections 3.13 and 3.14). This allows upgrades or changes in requirements between the two related devices but still allows inventories of transmitters to be cross-utilized between the different but similar sensor technologies. The trend is to utilize the similar functionality of the two related technologies from a hardware and software/firmware point of view that benefits application users.

Other interesting developments are in the area of "smart" local microprocessor-driven displays on transmitters that show measurement integrity information. Using the echo envelope curve representation (signal progression) on the local transmitter display shows signal strength versus distance. The curve indicates anomalies within a tank such as nozzles, weld seams, specific tank internals, and so forth for which compensation is required (see Figure 3.20k). This helps the technician in the field to validate the instrument's integrity, even in hazardous locations. The embedded microprocessor can compensate for the spurious signals. False echoes can be suppressed to prevent any misinterpretation by increasing the detection threshold at one or more fixed points. If the reflected signal is strong enough, the transmitter will follow the true echo, even during the increased detection threshold. Should the reflected echo signal be smaller than the threshold, the transmitter will "look around" the increased threshold and will hold the output until the true signal appears again. This can be done on both a per-point basis and automatically.

In addition, many manufacturers have a troubleshooting menu-based system displaying configuration information, diagnostics, and documentation on the local display. If necessary, this information can also be accessed in remote locations via HART protocols or a digital fieldbus protocol (FOUNDATION fieldbus, Profibus-PA).

© 2003 by Béla Lipták

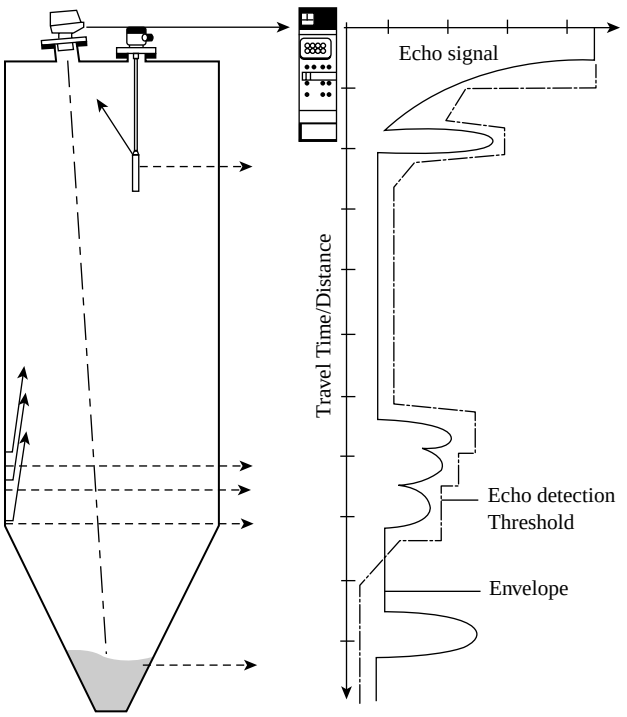

FIG. 3.20k
Echo envelope curve and internal tank anomalies. (Courtesy of Endress+Hauser Inc.)

CONCLUSION

Ultrasonics now can be considered as one of the traditional methods of level measurement. As probe-type level switches, they can give reliable performance, even on difficult slurry or sludge-type services. The main advantages of ultrasonic transmitters are the absence of moving parts and the ability to measure the level without making physical contact with the process material. In some specialized designs, the penetration of the tank can also be avoided. The reliability of the reading is unaffected by changes in the composition, density, moisture content, electrical conductivity, and dielectric constant of the process fluid. If temperature compensation and automatic self-calibration are included, the resulting level reading can be accurate to 0.25% of full scale.

In terms of limitations, the ultrasonic level transmitter is just as good as the echo it receives. The echo can be weak as a result of dispersion (which reduces sound intensity by the square of distance) and absorption (which, in dry air, reduces its energy level by 1 to 3 dB/m). The energy content of the echo will be further reduced if the bin is tall, if the vapor space is dusty, or if it contains foam or other sound-absorbing materials such as water vapors or mists. In addition to the problem of weak echos, another potential problem is the reflective properties and density of the process surface. If that surface is sound-absorbing (fluffy solids), sloping (angle of repose), or irregular, causing a diffused reflection of the ultrasonic pulse, the result can be an error, as the round-trip time of travel might not correspond to the vertical distance between transmitter and level. Therefore, the best guide for using ultrasonic level instruments is past experience on similar installations.

Reference

1. Lynnworth, L. C., *Ultrasonic Measurements for Process Control: Theory, Techniques, Applications,* Academic Press, 1989.

Bibliography

Andsager, R. L. and Knapp, R. M., Acoustic determination of liquid levels in gas wells, *Pet. Technol.,* May 1967.

Bacon, J. M., The changing world of level measurement, *InTech,* June 1996.

Bacon, J. M., D/P versus Other Technologies—The Changing World of Level Measurement, ISA Conference, Paper #95–071, October 1995.

Bahner, M., Meeting Spill Prevention Regulations using RF Admittance and Ultrasonic Level Measurement Technologies, ISA Conference, Paper #95–072, October 1995.

Berrie, P. G., Ultrasonic measurement of level filling using fuzzy logic, *Technica,* May 1994.

Brovtsyn, A. K., Ultrasonic monitoring of high temperature and aggressive media, *Russ. Ultrasonics,* 30(1) (English), 2000.

Control level under fouling conditions, *Hydrocarbon Processing,* November 2000.

Duncan, D. L., Ultrasonics in Solids Level Measurement, ISA Conference, Paper #91–0485, 1991.

Duncan, D. L., Ultrasonic sensors: now an even better choice for solid material level detection, *Instrum. Control Sys.,* November 1998.

Entwistle, H., Survey of Level Instruments, ISA Conference, Anaheim, CA, Paper #91-0484, 1991.

Glenn, L. E., Tank gauging—comparing the various technologies, in *ISA Conf. Proc.*, Anaheim, CA, Paper #91–0471, 1991.

How can we measure level of petroleum sludge? *Control,* August 1999.

Johnson, D., Level sensing in hostile environments, *Control Eng.,* August 2001.

Kalmus, H. P., New ultrasonic liquid level gauge, *Rev. Sci. Instrum.,* October 1965.

Kaminski, H. K., Sonics measure level, *Instrum. Technol.,* December 1967.

Lerner, J., Continuous level measurement: an introduction to 16 basic types, *Control,* November 1990.

Level measurement and control, *Meas. Control,* April 1991.

Liquid levels are measured by ultrasonic signal, *Prod. Eng.,* October 1975.

Owen, T., Overcoming obstacles in solids level measurement, *Control,* February 1998.

Reason, J., Ultrasonics: practical plant engineering total for level control, *Plant Eng.,* December 28, 1972.

Sholette, W., Eliminating Fugitive Emissions and Environmental Accidents through the Proper Selection of Level Measurement and Control Systems, ISA Conference, Paper #95–115, October 1995.

Ultrasonic level measurement of solids and liquids, in *Proc. 1996 International Conference on Advances in Instrumentation and Control,* October 1996.

Ultrasonic multiple-sensor solids level measurements, in *Proc. 1994 IEEE Instrumentation and Measurement Technology Conference,* Part 2, 1994.

© 2003 by Béla Lipták

Ultrasonic monitor/sensor controls sludge flow, *Water and Sewage Works*, June 1978.

Ultrasonics pinpoint liquid levels, *Automotive Eng.*, September 1975.

Van de Kamp, W., *The Theory and Practice of Level Measurement*, 17th ed., Endress+Hauser, Greenwood, IN, 2001.

Waterbury, R. C., Level sensing key to water treatment, *InTech*, December 1991.

Waterbury, R. C., Level sensing tips towards basics, *InTech*, May 1994.

Waterbury, R. C., Liquid level measurement 101, *Control*, November 1998.

Weiss, W. I., Ultrasonic level controls, *ISA J.*, December 1966.

Wolff, J., Ultrasonic in the sewage industry, *Water and Sewage Works*, June 1973.

Yan, H., Ultrasonic sensors and in-situ correction for the monitoring of indistinct level interfaces, in *ISCS 2000—Proc. International Society for Optical Engineering*, 4077, 2000.

© 2003 by Béla Lipták

3.21 Vibrating Level Switches

D. S. KAYSER (1982) **B. G. LIPTÁK** (1969, 1995, 2003)

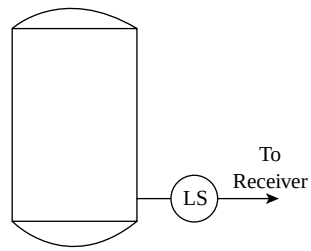

Flow Sheet Symbol

Types	A. Tuning fork B. Vibrating probe C. Vibrating reed
Applications	Can be used to detect the level of liquids, slurry or solids
Design Pressure	A. and B. Up to 150 PSIG (10.3 bars = 1 MPa) C. Up to 3000 PSIG (207 bars = 20.7 MPa)
Design Temperature	A. From –45 to 200°F (–43 to 93°C) B. From 8 to 176°F (–10 to 80°C) C. From –150 to 300°F (–100 to 149°C)
Materials of Construction	Aluminum, steel, stainless steel
Minimum Bulk Density	A. and C. Down to 1.0 lbm/ft^3 (16 kg/m^3) B. Requires an apparent specific gravity of 0.2
Inaccuracy	Generally, 0.25 to 0.5 in; the repeatability of type C is 0.125 in. (3 mm)
Cost	$300 to $500
Partial List of Suppliers	Automation Products Inc. (www.dynatrolusa.com) Bindicator (www.bindicator.com) Endress+Hauser Systems & Gauging (www.systems.endress.com) Monitor Mfg. Technologies LLC (www.monitortech.com) Monitrol Manufacturing Co. (www.monitrolmfg.com) Solartron Inc. (www.solartron.com)

Several level switch designs operate by keeping a probe or other element in oscillation or in natural frequency vibration and triggering a relay when the process material in the tank reaches the vibrating element and damps out the vibration. The reed, probe, and tuning fork variations are distinguished only by the frequencies of their oscillation (reed, 120 Hz; probe, 200 to 400 Hz; tuning fork, 85 Hz) and by their dimensions or physical shapes. Their shapes are similar, although the close spacing between the arms of the tuning fork could make it more susceptible to material buildup in sticky services than the others. This is not necessarily so on all types of coatings because, although any buildup changes the natural frequency of vibration, a limited amount of buildup will not collapse the oscillation.

The applications of vibrating level switch designs are also similar and include powders of different plastics, toners for copiers, detergents, powdered sugar, flour, ground or instant coffee, chocolate, dried milk, tea leaves, cosmetic powders; granules of plastic pellets, rice, wheat, beans, carbon, sugar, and salt; plus slurries and liquids.

VIBRATING LEVEL SWITCHES

The design of the vibrating reed level switch is illustrated in Figure 3.21a. The unit consists of a driver, paddle, and pickup. The driver coil induces a 120 Hz vibration in the paddle that is damped out when the paddle is covered by the process material. The pickup end contains a permanent magnet and a coil that generates a millivolt output signal when the paddle is vibrating. When the paddle is covered, the signal decreases and as a consequence, a control relay

© 2003 by Béla Lipták

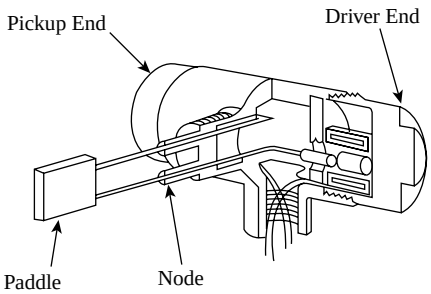

FIG. 3.21a
Vibrating reed switch. (Courtesy of Automation Products Inc.)

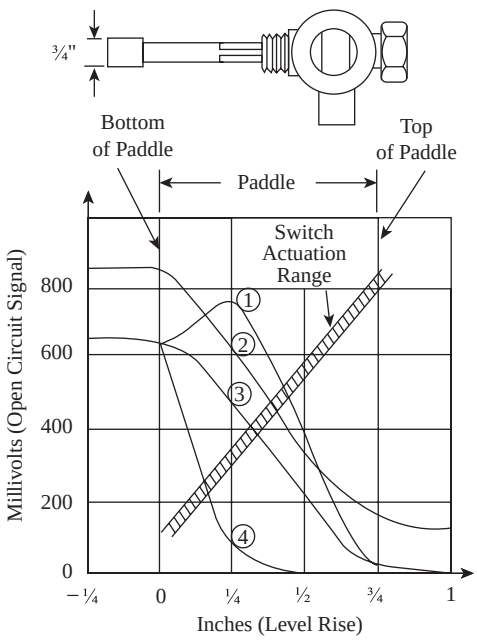

FIG. 3.21b
Reed switch actuation ranges for liquid service. (Courtesy of Automation Products Inc.)

is de-energized. A welded pressure seal is made at the node points. The device will detect liquid–liquid, liquid–vapor, and solid–vapor interfaces, because the switch is sensitive enough to detect relatively small changes in the density of the surrounding process material.

The characteristics of this switch are described by Figures 3.21b and 3.21c. Figure 3.21b is a plot of millivolt signal strength versus paddle coverage. Curve 1 describes the switch behavior in flour, 2 in water, 3 in polyethylene pellets, and 4 in granular sugar. It can be noted that, in all four cases, the switch will actuate before the paddle is fully covered by the process material. For example, in the case of water (2), switch actuation occurs when the water level is about 0.4 in. (10 mm) above the bottom of the paddle.

The curves in Figure 3.21c refer to granular powders at various densities. Curve 1 is for 60 lbm/ft^3 (960 kg/m^3), 2 is for 50 lbm/ft^3 (800 kg/m^3), and 3 is for 40 lbm/ft^3 (640 kg/m^3). As would be expected, the lighter the powder, the more level

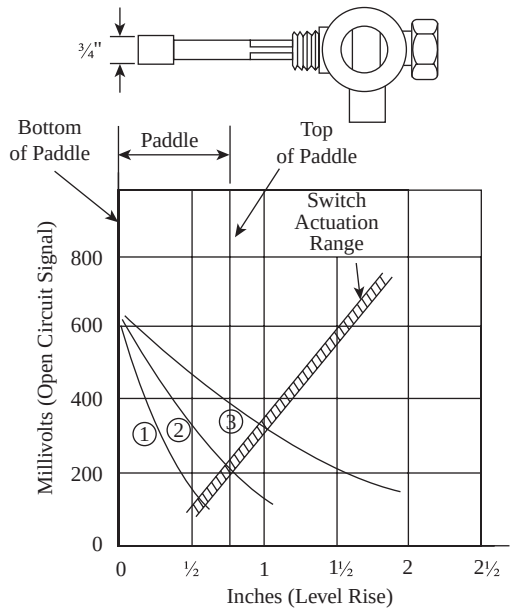

FIG. 3.21c
Reed switch actuating ranges for heavy solids. (Courtesy of Automation Products Inc.)

has to build up before switch actuation occurs. In case of the 40 lbm/ft^3 powder (3), the switch will actuate at 1.0-in. level rise, which corresponds to a level buildup of 0.25 in. (6 mm) above the top of the paddle.

The vibrating reed level switch can be used to detect both rising and falling levels, and it can be installed in tanks or pipelines. Its use for measuring density and viscosity are discussed in Chapters 6 and 8, respectively. If the process material has a tendency to adhere to the paddle, such buildup can be removed by periodically purging the line through a purge well but, in general, this unit is not recommended for applications where buildup is probable. The sensing wires between probe and receiver should be shielded and grounded at both ends. Supply voltage variations between 105 and 125 V will not interfere with the measurement.

When used on wet powders, the vibrating paddle has a tendency to create a cavity in the granular solids. If this occurs, the vibration amplitude will be the same as if the paddle were in the vapor space. Therefore, this level switch should not be used in applications involving wet powders. Where the solids bins are purposely vibrated and the vibration frequency is close to 120 Hz, this method of level measurement is unreliable and therefore should not be considered.

TUNING FORK

The tuning fork type of level switch is oscillated at its resonant frequency of about 85 Hz by a piezoelectric crystal located near the head of the fork. Another crystal, also mounted in the head, detects the vibration or the lack thereof. The unit can tolerate some limited amount of buildup and

© 2003 by Béla Lipták

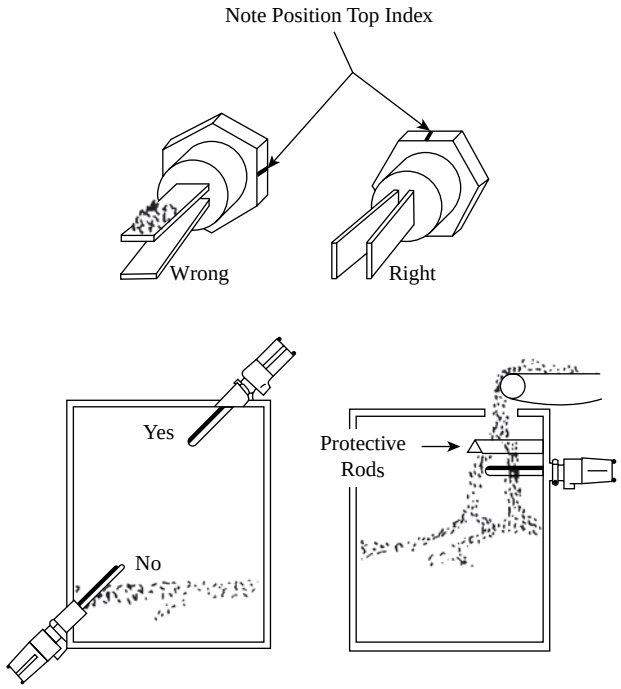

FIG. 3.21d
The installation of tuning fork-type level switches. (Courtesy of Endress + Hauser Inc.)

can also operate at higher than the design temperature if purging is provided to cool the crystals. For mounting recommendations and requirements refer to Figure 3.21d.

When the self-sustaining resonant frequency probe is in the vapor space, an electromechanical oscillator is formed, causing the probe to vibrate at its natural mechanical resonant frequency of approximately 85 Hz. One coil drives the probe, and a second coil monitors the vibration and generates a corresponding AC voltage signal. This feedback signal is amplified and reapplied to the drive coil, sustaining the mechanical vibration. When the process fluid rises to cover the probe, it damps the vibration, causing the feedback signal and drive voltages to collapse. At that point, oscillation ceases. A relay located in the control unit detects the state of oscillation and initiates the contact closures.

The advantage of the self-sustaining resonant frequency probe design is that material buildup on the probe has only limited effect, because, with a limited amount of coating, the resulting change in the natural frequency of the probe but does not collapse the oscillation. Therefore, the sensor is suitable for some slurry services. This design is also applicable for use on low-density solids level detection down to 1.0 lbm/ft^3 (16 kg/m^3).

VIBRATING PROBES

In the vibrating plate or vibrating probe level switches, the probe is caused to vibrate by applying piezoelectric energy. Two piezoelectric elements are used, one providing vibration

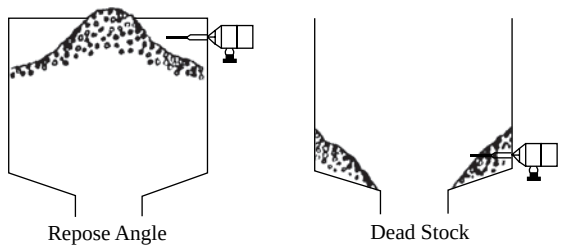

FIG. 3.21e
The cross-section of a vibrating probe and illustrations of false level indications caused by not probably considering the effects.

(at a frequency of 200 to 400 Hz) and the other receiving it. When the probe is buried by the process material, the vibration decreases, and this decrease is used to trigger the switch. To make it immune to the effects of hopper vibration, the switch has a relatively high resonant frequency. Figure 3.21e illustrates that the sensing probe should be located so that the angle of repose will not cause false level indication when the solids level is low.

CONCLUSION

Vibrating reed switches are reliable devices that operate on a readily understood principle. Because they can detect the presence of materials with a bulk density as low as 1.0 lb/ft^3 (0.016 g/cm^3), they have a wide range of applications, particularly in solids level detection. Their limitation is that the switch setting cannot be changed without changing the length or the mounting location of the switch.

Bibliography

Bacon, J. M., The changing world of level measurement, *InTech*, June 1996.

Bahner, M., A practical overview of continuous level measurement technologies, *Flow Control*, June-July 1997.

Berto, F. J., Technology review of tank measurement errors reveals techniques for greater accuracy, *Oil & Gas J.*, March 3, 1997.

Carsella, B., Popular level-gauging methods, *Chemical Process.*, December 1998.

Control level under fouling conditions, *Hydrocarbon Processing*, November 2000.

Entwistle, H., Survey of Level Instruments, ISA Conference, Anaheim, CA, Paper #91-0484, 1991.

Felton, B., Level measurement: ancient chore, modern tools, *InTech*, August 2001.

Glenn, L. E., Tank gauging—comparing the various technologies, in *ISA Conf. Proc.*, Anaheim, CA, Paper #91-0471, 1991.

How can we measure level of petroleum sludge? *Control*, August 1999.

Hughes, T. A., *Measurement and Control Basics*, 3rd ed., ISA, Research Triangle Park, NC, 2002.

Johnson, D., Level sensing in hostile environments, *Control Engineering*, August 2001.

Johnson, D., Checking level: not glamorous, sometimes dangerous, but necessary, *Control Eng.*, August 2001.

© 2003 by Béla Lipták

Koeneman, D. W., Evaluate the options for measuring process levels, *Chemical Eng.*, July 2000.
Liptak, B. G., On-line instrumentation, *Chemical Eng.*, March 31, 1986.
Nyce, D. S., Tank gauging advances, *Fuel Technology Management*, January 1997.
Parker, S., Selecting a level device based on application needs, in *1999 Fluid Flow Annual*, Putman Publishing, Itasca, IL, 1999, 75–80.
Paul, B. O., Seventeen level sensing methods, *Chemical Process.*, February 1999.
Sholette, W., Pick the proper level measurement technology, *Chemical Eng. Prog.*, October 1996.
Tuning fork notes level of salt in CEGB brine tanks, *Process Eng.*, January 1975.
Van de Kamp, W., *The Theory and Practice of Level Measurement*, 17th ed., Endress+Hauser, Greenwood, IN, 2001.
Waterbury, R. C., Liquid level measurement 101, *Control*, November 1998.

© 2003 by Béla Lipták

Temperature Measurement

4

4.1
APPLICATION AND SELECTION 565

Introduction 565
- Orientation Tables 565
- International Practical Temperature Scale 570

Temperature Sensors 572
- Nonelectric Temperature Sensors 572
  - Liquid-in-Glass Thermometers 572
  - Bimetallic Thermometers 573
  - Filled System Thermometers 573
  - Bistate/Phase Change Sensors 573
- Electronic Thermometers/Sensors 573
  - Thermocouples 573
  - Resistance Temperature Detectors 574
  - Thermistors 575
  - Radiation Pyrometers 575
  - Solid-State Sensors 578
  - Heat-Flow and Thermal-Conductivity Sensors 578

Intelligent Transmitters and Remote Input/Output (I/O) 579
- Fieldbus Structures 580
- Advanced Transmitters 580

Temperature Measurement Applications 581
- High Temperature Measurement 581
- Speed of Response 581
- Surface Measurement 581
- Measuring the Temperature of Solids 582
- Averaging Measurements 584
- Narrow Span Measurements 584

Installation Considerations 584
- Temperature Transmitters in Place of Direct Wiring 584
  - Lower Wiring Costs 584
  - Protect Signals from Plant Noise 584
  - Stop Ground Loops 586
  - Reduce Hardware and Stocking Costs 586
  - Match the Best Sensor to the Application 586
  - Enhance Accuracy and Stability 586
  - Simplify Engineering and Prevent Miswiring 586
  - Ease Future Upgrades 586
  - Lower Maintenance Time and Expense 586
  - Avoid Lead Wire Imbalances 587
- Calibration/Certification 587
- Agency Approvals for Hazardous Areas 587
- Safety-Related Applications 587

References 588

Bibliography 588

4.2
BIMETALLIC THERMOMETERS 590

Bimetallic Springs 591
- Thermometers 591
- Dial Orientation and Size 592
- Advantages and Disadvantages 592

Bibliography 592

© 2003 by Béla Lipták

4.3
CALIBRATORS AND SIMULATORS 594

Temperature Calibration Baths 595
Simulators 596
Conclusions 596
Bibliography 596

4.4
CONES, CRAYONS, LABELS, PAINTS, AND PELLETS 599

Introduction 600
Color Indicators 600
Paints and Pellets 600
Crayons 600
Pyrometric Cones 601
The Ceramics Industry 601
Bar and Hole Indicators 602
Engine Test Research 603
References 603
Bibliography 603

4.5
FIBER-OPTIC THERMOMETERS 604

Thermometer Design 605
The Optical Fiber Thermometer (OFT) Sensors 606
Conclusions 607
References 608
Bibliography 608

4.6
FILLED-BULB AND GLASS-STEM THERMOMETERS 610

Glass-Stem Thermometers 611
Filled Thermal Systems 612
Bulbs, Wells, and Capillaries 612
Class I: Liquid-Filled Systems 614
Class II: Vapor Systems 615
Class IIA Systems 615
Class IIB Systems 615
Class IIC Systems 616
Class IID Systems 616
Class III: Gas-Filled Systems 616
Class V: Mercury-Filled Systems 617
Ambient-Temperature Compensation 617
Effects of Bulb Elevation 618
Barometric Errors 619
Conclusions 619
Reference 619
Bibliography 619

4.7
INTEGRATED CIRCUITRY TRANSISTORS AND DIODES 620

Introduction 620
Integrated Circuit Temperature Sensors 621
Diode-Type Temperature Sensors 621
Reference 622
Bibliography 622

4.8
MISCELLANEOUS AND DISCONTINUED SENSORS 623

Self-Measuring Devices 623
Acoustic Time Domain Reflectometry 624
Carbon Resistors 624
Capacitance Cable for Detecting Hot Spots 624
Fluidic Sensors 625
Johnson Noise Thermometer 625
Liquid Crystals 625
Paramagnetic Salts 625
Spectroscopic Temperature Measurement 626
Thermography 626
Fiber Bragg Grating Temperature Sensors 626
Discontinued Temperature Sensors 626
Pneumatic and Suction Pyrometers 626
Suction Pyrometers 626
Pneumatic Pyrometers 627
Quartz Crystal Thermometry 627
Advantages and Disadvantages 628
References 629
Bibliography 629

4.9
RADIATION AND INFRARED PYROMETERS 630

Introduction 631
Theoretical Relationships 632
The Theoretical and Real Targets 633
Emittance, Emissivity 633
Selecting the Radiation Pyrometer 634
Radiation Pyrometer Designs 635
Total Radiation Pyrometers 635
Narrow-Band Pyrometers 635
Ratio Pyrometers 636
Manual Optical Pyrometers 637
Automatic Optical and IR Pyrometers 638
Detectors 638
Thermal Detectors 638
Photo-Detectors 639
Selection 639
Installations and Accessories 640
Advances and New Developments 641
Summary 641
Advantages 642
Disadvantages 642

© 2003 by Béla Lipták

Definitions 642
Reference 643
Bibliography 643

4.10 RESISTANCE TEMPERATURE DETECTORS 645

Resistance Temperature Detector Basics 647
Detectors and Their Applications 647
Industrial RTD Construction Requirements 648
Platinum RTDs 648
Base-Metal RTDs 649
Balco 649
Copper 649
Measuring the RTD Resistance 649
Two-Wire RTDs 649
Three-Wire RTDs 650
Four-Wire RTDs 651
Sensor Construction 652
Thermowells 653
Installation 653
Transmitters 654
Intelligent Transmitters 654
A/D Converters, Digital Protocols 655
Advantages and Limitations 655
Reference 655
Bibliography 655

4.11 TEMPERATURE SWITCHES AND THERMOSTATS 657

Introduction 658
Electronic Temperature Switches 658
Input from Transmitter 659
Input Directly from Sensor 659
Installation Considerations 659
In The Control Room 659
Field Mounting 660
Availability and Reliability 660
Electromechanical Temperature Switches 660
Features Required for Industrial Applications 661
Safety Considerations 661
Thermostats 661
Electromechanical Designs 661
Pneumatic Designs 662
Pneumatic-Bimetallic 662
Throttling 662
Offset Error 662
Design Features 663
Advanced Features 663
Adjustable Gains or Proportional Bands 663
Dual Set Points 663
Limited Control Range 663
Zero Energy Band Control 663
Split Range Control 663
Electrical/Electronic Designs 664
Recent Advances 664
Bibliography 665

4.12 THERMISTORS 666

Introduction 667
Historical Note 667
Resistance-Temperature Characteristic 667
Sensor Types 668
Temperature Measurement 668
Microammeter Readout 668
Wheatstone Bridge 669
Digital Instrumentation 670
Thermistors Combined with Resistors 670
Self-Heating Effect 670
Applications 671
Calibration and Testing 671
Advantages and Limitations 671
References 672
Bibliography 672

4.13 THERMOCOUPLES 673

Theory of Operation 675
Interpreting the Generated Voltage 675
Laws of Intermediate Temperatures and Metals 676
Cold Junction Compensation 676
Multiplexing 678
Hardware Compensation 678
Measuring the EMF Generated 678
Transmitter Location and Noise 679
Intelligent Transmitters 679
Thermocouple Types 679
ISA Types J, S, and T 679
ISA Types B, E, K, R, and N 679
Thermocouple Construction and Protection 682
Measuring Junction Designs 682
Extension Wires 682
Sheath Materials 683
Thermowells 683
Surface Temperature Detectors 684
Specialized Detectors 684
Needle Sensors 684
Suction Pyrometers 685
Installation and Protection 685
Multiple Thermocouples 685
Average Temperatures and Temperature Differences 685

© 2003 by Béla Lipták

Thermopiles 685
Thermocouple Burnout 685
Protection Against Noise 686
Normal Mode Noise 687
Calibration, Diagnostics, and Transmission 687
Calibration 687
Diagnostics 687
Transmission 687
Intelligent Transmitters 688
Advantages and Limitations 688
Thermocouple Tables 688
Converting Millivoltage to Temperature 694
Example 1 694
Example 2 695
Converting Temperature to Millivoltage 695
Example 1 695
Example 2 695
References 696
Bibliography 696

4.14 THERMOWELLS 697

Introduction 698
Thermowell Types 698
Protection Tubes 698
Sheaths 698
Thermowell Installation 699
Immersion Depth 699
Thermowell Time Constants 700
References 703
Bibliography 703

4.15 ULTRASONIC AND SONIC THERMOMETERS 705

Operating Principle 705
Ranges and Applications 705
Boiler/Furnace Applications 706
Conclusions 707
References 707
Bibliography 707

© 2003 by Béla Lipták

4.1 Application and Selection

D. RALL (1969) **B. G. LIPTÁK** (1982, 1995) **L. W. MOORE, B. ADLER** (2003)

Partial List of Suppliers:

ABB (www.abb.com)
Foxboro/Invensys (www.foxboro.com/temp)
Honeywell (www.iac.honeywell.com/ichome)
Hukseflux (www.hukseflux.com)
Kamstrup (www.kamstrup-process.com)
Mathis Instruments Ltd. (www.mathis.unb.ca)
Moore Industries-International Inc. (www.miinet.com/products/ca_temperature.shtml)
Rosemount/Emerson (www.rosemount.com/products/temperature/)
Siemens (www.sea.siemens.com)
Yokogawa (www.yokogawa.com)

INTRODUCTION

Temperature is as fundamental a physical concept as the three basic quantities of mechanics: mass, length, and time. Temperature is an expression that denotes a physical condition of matter. Yet, the idea of temperature is a relative one, arrived at by a number of conflicting theories. Classic kinetic theory depicts heat as a form of energy associated with the activity of the molecules of a substance. These minute particles of all matter are assumed to be in continuous motion that is sensed as heat. Temperature is a measure of this heat.

To standardize on the temperature of objects under varying conditions, several scales have been devised. The Fahrenheit scale arbitrarily assigns the number 32 to the freezing point of water and the number 212 to the boiling point of water. The interval is divided into 180 equal parts. The Centigrade or Celsius scale defines the freezing point of the water to be 0, and its boiling point to be 100.

In line with the classic theory, some relation to the point where molecular motion is at a minimum had to be established, and the Kelvin scale, using Centigrade divisions, was drawn. Zero Kelvin was determined to be 273.19°C. The Rankine scale places its zero at 459.61°F and uses Fahrenheit divisions in the same arbitrary way in which Lord Kelvin used the Celsius scale.

Orientation Tables

The range in temperature within the universe varies 18 orders of magnitude. It ranges from the near absolute zero of black space to the billions of degrees in the nuclear fusion process deep within the stars. But the practical range on earth can be considered as extending from 1°R upward about 5 decades to around 20,000°R. This is still a tremendous range, and no single sensor could possibly cover it.

Table 4.1a provides the reader of this handbook with an orientation table containing information on the ranges and other features of the various temperature sensors. Table 4.1b is a conversion table, which is convenient when one has to go from Fahrenheit to Centigrade units and back. Therefore, one of the restrictions on the temperature sensor concerns the temperature range over which it can stay reasonably accurate. Table 4.1c provides the approximate temperature ranges of each sensor type. The many types of sensors are listed on the left, while some of their characteristics are shown horizontally across the top. If it is not known what general type of sensor will do a specific job, the table can help point the way to the right selection.

Once the class of sensors has been found, the data in the table will give a rough idea of the applicability of that design. When the possible choices of selection have been narrowed down to a few instrument types, the reader should turn to the corresponding sections of this chapter. In the front of each section there is a listing of range, accuracy, cost, and vendors. Inspecting these briefly, one can determine if the instrument generally meets the requirements or not. If it does, one should read the section for a description of the design and its available variations in detail. If some of the features are unacceptable, one should proceed to the next choice noted in the orientation table (Table 4.1a).

Temperature sensors should be selected to meet the requirements of specific applications. Sensor Selection Table 4.1d can assist the reader in this task.[1] If the application engineer determines the required temperature range, the nature of the information required (point or average temperature), and the nature of the process environment, this table can be used to determine

© 2003 by Béla Lipták

TABLE 4.1a

Orientation Table for Temperature Sensors

Type	Temperature Range	Available Span			Accuracy		Cost ($)			Sensor Size			Available With			Stability	Repeatability	Response Time	Sensitivity	① Interchangeable	Linear	② Complete System	③ Maximum Distance to Readout in Feet (0.305m)
		Under 100°F (38°C)	Between 100 and 1000°F	Above 1000°F (538°C)	% Full Scale or % of Span	Best Attainable in °F (°C = 5/9°F)	Under $200	Between $200 and $1000	Above $1000	Small	Medium	Large	Recorder	Indicator	Controller								
Bimetallic Elements		✓	✓		1–2	1	✓			✓	✓		✓	✓	✓	E	F	G	G		N	✓	N
Color Indicators		✓				8	✓							✓					F			✓	N
Fiber-Optic			✓	✓	1	0.2			✓	✓			✓	✓	✓	F	F	E	G		N	✓	1000+
Filled Elements Liquid		✓	✓		0.5–2	0.1	✓	✓		✓	✓		✓	✓	✓	E	F	F	G		✓	✓	40
Vapor		✓	✓		0.5–2	0.6	✓	✓			✓		✓	✓	✓	E	F	G	F		N	✓	200
Gas			✓	✓	0.5–2	1.2	✓	✓				✓	✓	✓	✓	E	F	G	F		✓	✓	150
Mercury		✓	✓	✓	0.5–2	0.25	✓	✓		✓	✓		✓	✓	✓	E	F	F	G		✓	✓	50
Glass-Stem Therm.		✓	✓		0.1–2	0.01	✓	✓			✓			✓		E	E	G	G	✓	✓	✓	N
Integrated Circuit Diodes		✓	✓		0.2–2	0.2		✓		✓				✓		G	G	G	E		✓	N	
Transistors		✓	✓		2	1		✓		✓				✓		F	G	G	E		✓	N	
Misc.— Carbon Resistors		✓				0.5		✓		✓	✓			✓		F, G	G	G	G		N	N	
Fluidic Sensors			✓		2			✓				✓		✓		F	F	F	F		N	N	
Liquid Crystals		✓				1	✓					✓		✓		E	G, E	G	E, G			✓	
Paramagnetic Salts		✓			1	0.005			✓			✓		✓		G	G, E	E	F, G		N	✓	
Spectroscopy				✓	1				✓			✓		✓		G	G, E	G			N	✓	
Thermography			✓			1	✓	✓						✓					F			✓	
Pyrometers—Suction			✓	✓	2	20			✓			✓	✓	✓		F	G	F	P		N	N	
Pneumatic			✓	✓	2	25			✓			✓		✓		F	G	F	P		N	N	
Pyrometric Cones		✓	✓			5	✓			✓	✓			✓		E	F	F	F			✓	N

© 2003 by Béla Lipták

Radiation Pyrometers—Optical & Ratio															✓	1–2	2–10			✓			✓	✓	✓	✓	F	F	G	G		N	✓	100
Narrow & Wide Band														✓	✓	0.5–2	5			✓			✓	✓	✓	✓	F	F	E	G		N	✓	100
Quartz Crystals													✓	✓		0.1	0.2			✓		✓	✓	✓	✓		E	G	G	E	✓	✓	N	1000
Resistance Bulbs—Nickel													✓	✓		0.25	0.3	✓	✓	✓		✓		✓	✓	✓	G, E	E	G	E	✓	N	N	1000
Platinum													✓	✓	✓	0.15	0.2		✓	✓		✓		✓	✓	✓	E	E	G	G, E	✓	✓	N	3000
Thermistors													✓	✓		0.2	0.02	✓	✓		✓			✓	✓	✓	F	G	E	E		N	N	3000
Thermocouples—																																		
Type T													✓	✓		0.1	1.5	✓	✓		✓	✓		✓	✓	✓	G	G	G	G	✓	N	N	3000
Type J													✓	✓	✓	0.1	2.5	✓	✓		✓	✓		✓	✓	✓	G	G	G	G	✓	N	N	3000
Type K													✓	✓	✓	0.1	2.5		✓		✓	✓		✓	✓	✓	G	G	G	G	✓	✓	N	3000
Types R & S														✓	✓	0.1	4		✓		✓	✓		✓	✓	✓	G	G	E	E	✓	N	N	3000
Ultrasonic													✓	✓	✓	5				✓			✓		✓		G	F, G	E	E, G		N	N	

Terminology

N–No or None
E–Excellent
G–Good
F–Fair

① Interchangeable sensor, without recalibration of entire system.
② System is complete when sensor and readout is sold as a single unit. When several readouts can be used with the same sensor, system is not considered to be complete.
③ Without special compensation.

Recommended

Available but not recommended

© 2003 by Béla Lipták

TABLE 4.1b

Temperature Conversion Table

(When converting any temperature, find the boldface value of the temperature to be converted and look to the left for its °C equivalent or to right for its °F equivalent. Temperatures not listed can be converted using °F = (9°C/5) + 32 or °C = 5(°F − 32)/9.)

C		F	C		F	C		F	C		F	C		F	C		F	C		F	C		F	C		F
−273.1	**−459.4**		−17.8	**0**	32	10.0	**50**	122.0	38	**100**	212	260	**500**	932	538	**1000**	1832	816	**1500**	2732	1093	**2000**	3632	1371	**2500**	4532
−268	**−450**		−17.2	**1**	33.8	10.6	**51**	123.8	43	**110**	230	266	**510**	950	543	**1010**	1850	821	**1510**	2750	1099	**2010**	3650	1377	**2510**	4550
−262	**−440**		−16.7	**2**	35.6	11.1	**52**	125.6	49	**120**	248	271	**520**	968	549	**1020**	1868	827	**1520**	2768	1104	**2020**	3668	1382	**2520**	4568
−257	**−430**		−16.1	**3**	37.4	11.7	**53**	127.4	54	**130**	266	277	**530**	986	554	**1030**	1886	832	**1530**	2786	1110	**2030**	3686	1388	**2530**	4586
−251	**−420**		−15.6	**4**	39.2	12.2	**54**	129.2	60	**140**	284	282	**540**	1004	560	**1040**	1904	838	**1540**	2804	1116	**2040**	3704	1393	**2540**	4604
−246	**−410**		−15.0	**5**	41.0	12.8	**55**	131.0	66	**150**	302	288	**550**	1022	566	**1050**	1922	843	**1550**	2822	1121	**2050**	3722	1399	**2550**	4622
−240	**−400**		−14.4	**6**	42.8	13.3	**56**	132.8	71	**160**	320	293	**560**	1040	571	**1060**	1940	849	**1560**	2740	1127	**2060**	3740	1404	**2560**	4640
−234	**−390**		−13.9	**7**	44.6	13.9	**57**	134.6	77	**170**	338	299	**570**	1058	577	**1070**	1958	854	**1570**	2858	1132	**2070**	3758	1410	**2570**	4658
−229	**−380**		−13.3	**8**	46.4	14.4	**58**	136.4	82	**180**	356	304	**580**	1076	582	**1080**	1976	860	**1580**	2876	1138	**2080**	3776	1416	**2580**	4676
−223	**−370**		−12.8	**9**	48.2	15.0	**59**	138.2	88	**190**	374	310	**590**	1094	588	**1090**	1994	886	**1590**	2894	1143	**2090**	3794	1421	**2590**	4694
−218	**−360**		−12.2	**10**	50.0	15.6	**60**	140.0	93	**200**	392	316	**600**	1112	593	**1100**	2012	871	**1600**	2912	1149	**2100**	3812	1427	**2600**	4712
−212	**−350**		−11.7	**11**	51.8	16.1	**61**	141.8	99	**210**	410	321	**610**	1130	599	**1110**	2030	877	**1610**	2930	1154	**2110**	3830	1432	**2610**	4730
−207	**−340**		−11.1	**12**	53.6	16.7	**62**	143.6	100	**212**	413	327	**620**	1148	604	**1120**	2048	882	**1620**	2948	1160	**2120**	3848	1438	**2620**	4748
−201	**−330**		−10.6	**13**	55.4	17.2	**63**	145.4	104	**220**	428	332	**630**	1166	610	**1130**	2066	888	**1630**	2966	1166	**2130**	3866	1443	**2630**	4766
−196	**−320**		−10.0	**14**	57.2	17.8	**64**	147.2	110	**230**	446	338	**640**	1184	616	**1140**	2084	893	**1640**	2984	1171	**2140**	3884	1449	**2640**	4784
−190	**−310**		−9.44	**15**	59.0	18.3	**65**	149.0	116	**240**	464	343	**650**	1202	621	**1150**	2102	899	**1650**	3002	1177	**2150**	3902	1454	**2650**	4802
−184	**−300**		−8.89	**16**	60.8	18.9	**66**	150.8	121	**250**	482	349	**660**	1220	627	**1160**	2120	904	**1660**	3020	1182	**2160**	3920	1460	**2660**	4820
−179	**−290**		−8.33	**17**	62.6	19.4	**67**	152.6	127	**260**	500	354	**670**	1238	632	**1170**	2138	910	**1670**	3038	1188	**2170**	3938	1466	**2670**	4838
−173	**−280**		−7.78	**18**	64.4	20.0	**68**	154.4	132	**270**	518	360	**680**	1256	638	**1180**	2156	916	**1680**	3056	1193	**2180**	3956	1471	**2680**	4856
−169	**−273**	−459.4	−7.22	**19**	66.2	20.6	**69**	156.2	138	**280**	536	366	**690**	1274	643	**1190**	2174	921	**1690**	3074	1199	**2190**	3974	1477	**2690**	4874
−168	**−270**	−454	−6.67	**20**	68.0	21.1	**70**	158.0	143	**290**	554	371	**700**	1292	649	**1200**	2192	927	**1700**	3092	1204	**2200**	3992	1482	**2700**	4892
−162	**−260**	−436	−6.11	**21**	69.8	21.7	**71**	159.8	149	**300**	572	377	**710**	1310	654	**1210**	2210	932	**1710**	3110	1210	**2210**	4010	1488	**2710**	4910
−157	**−250**	−418	−5.56	**22**	71.6	22.2	**72**	161.6	154	**310**	590	382	**720**	1328	660	**1220**	2228	938	**1720**	3128	1216	**2220**	4028	1493	**2720**	4928
−151	**−240**	−400	−5.00	**23**	73.4	22.8	**73**	163.4	160	**320**	608	388	**730**	1346	666	**1230**	2246	943	**1730**	3146	1221	**2230**	4046	1499	**2730**	4946
−146	**−230**	−382	−4.44	**24**	75.2	23.3	**74**	165.2	166	**330**	626	393	**740**	1364	671	**1240**	2264	949	**1740**	3164	1227	**2240**	4064	1504	**2740**	4964
−140	**−220**	−364	−3.89	**25**	77.0	23.9	**75**	167.0	171	**340**	644	399	**750**	1382	677	**1250**	2282	954	**1750**	3182	1232	**2250**	4082	1510	**2750**	4982
−134	**−210**	−346	−3.33	**26**	78.8	24.4	**76**	168.8	177	**350**	662	404	**760**	1400	682	**1260**	2300	960	**1760**	3200	1238	**2260**	4100	1516	**2760**	5000
−129	**−200**	−328	−2.78	**27**	80.6	25.0	**77**	170.6	182	**360**	680	410	**770**	1418	688	**1270**	2318	966	**1770**	3218	1243	**2270**	4118	1521	**2770**	5018
−123	**−190**	−310	−2.22	**28**	82.4	25.6	**78**	172.4	188	**370**	698	416	**780**	1436	693	**1280**	2336	971	**1780**	3236	1249	**2280**	4136	1527	**2780**	5036
−118	**−180**	−292	−1.67	**29**	84.2	26.1	**79**	174.2	193	**380**	716	421	**790**	1454	699	**1290**	2354	977	**1790**	3254	1254	**2290**	4154	1532	**2790**	5054

© 2003 by Béla Lipták

–112	**–170**	–274	–1.11	**30**	86.0	26.7	**80**	176.0	199	**390**	734	427	**800**	1472	704	**1300**	2372	982	**1800**	3272	1260	**2300**	4172	1538	**2800**	5072
–107	**–160**	–256	–0.56	**31**	87.8	27.2	**81**	177.8	204	**400**	752	432	**810**	1490	710	**1310**	2390	988	**1810**	3290	1266	**2310**	4190	1543	**2810**	5090
–101	**–150**	–238	0	**32**	89.6	27.8	**82**	179.6	210	**410**	770	438	**820**	1508	716	**1320**	2408	993	**1820**	3308	1271	**2320**	4208	1549	**2820**	5108
–95.6	**–140**	–220	0.56	**33**	91.4	28.3	**83**	181.4	216	**420**	788	443	**830**	1526	721	**1330**	2426	999	**1830**	3326	1277	**2330**	4226	1554	**2830**	5126
–90.0	**–130**	–202	1.11	**34**	93.2	28.9	**84**	183.2	221	**430**	806	449	**840**	1544	727	**1340**	2444	1004	**1840**	3344	1282	**2340**	4244	1560	**2840**	5144
–84.4	**–120**	–184	1.67	**35**	95.0	29.4	**85**	185.0	227	**440**	824	454	**850**	1562	732	**1350**	2462	1010	**1850**	3362	1288	**2350**	4262	1566	**2850**	5162
–78.9	**–110**	–166	2.22	**36**	96.8	30.0	**86**	186.8	232	**450**	842	460	**860**	1580	738	**1360**	2480	1016	**1860**	3380	1293	**2360**	4282	1571	**2860**	5180
–73.3	**–100**	–148	2.78	**37**	98.6	30.6	**87**	188.6	238	**460**	860	466	**870**	1598	743	**1370**	2498	1021	**1870**	3398	1299	**2370**	4298	1577	**2870**	5198
–67.8	**–90**	–130	3.33	**38**	100.4	31.1	**88**	190.4	243	**470**	878	471	**880**	1616	749	**1380**	2516	1027	**1880**	3416	1304	**2380**	4316	1582	**2880**	5216
–62.2	**–80**	–112	3.89	**39**	102.2	31.7	**89**	192.2	249	**480**	896	477	**890**	1634	754	**1390**	2534	1032	**1890**	3434	1310	**2390**	4334	1588	**2890**	5234
–56.7	**–70**	–94	4.44	**40**	104.0	32.2	**90**	194.0	254	**490**	914	482	**900**	1652	760	**1400**	2552	1038	**1900**	3452	1316	**2400**	4352	1593	**2900**	5252
–51.1	**–60**	–76	5.00	**41**	105.8	32.8	**91**	195.8				488	**910**	1670	766	**1410**	2570	1043	**1910**	3470	1321	**2410**	4370	1599	**2910**	5270
–45.6	**–50**	–58	5.56	**42**	107.6	33.3	**92**	197.6				493	**920**	1688	771	**1420**	2588	1049	**1920**	3488	1327	**2420**	4388	1604	**2920**	5288
–40.0	**–40**	–40	6.11	**43**	109.4	33.9	**93**	199.4				499	**930**	1706	777	**1430**	2606	1054	**1930**	3506	1332	**2430**	4406	1610	**2930**	5306
–34.4	**–30**	–22	6.67	**44**	111.2	34.4	**94**	201.2				504	**940**	1724	782	**1440**	2624	1060	**1940**	3524	1338	**2440**	4424	1616	**2940**	5324
–28.9	**–20**	–4	7.22	**45**	113.0	35.0	**95**	203.0				510	**950**	1742	788	**1450**	2642	1066	**1950**	3542	1343	**2450**	4442	1621	**2950**	5342
–23.3	**–10**	14	7.78	**46**	114.8	35.6	**96**	204.8				516	**960**	1760	793	**1460**	2660	1071	**1960**	3560	1349	**2460**	4460	1627	**2960**	5360
–17.8	**0**	32	8.33	**47**	116.6	36.1	**97**	206.6				521	**970**	1778	799	**1470**	2678	1077	**1970**	3578	1354	**2470**	4478	1632	**2970**	5378
			8.89	**48**	118.4	36.7	**98**	208.4				527	**980**	1796	804	**1480**	2696	1082	**1980**	3596	1360	**2480**	4496	1638	**2980**	5396
			9.44	**49**	120.2	37.2	**99**	210.2				532	**990**	1814	810	**1490**	2714	1088	**1990**	3614	1366	**2490**	4514	1643	**2990**	5414

© 2003 by Béla Lipták

TABLE 4.1c
Temperature Sensor Accuracy and Range

Sensor Type	*Useful Range °F**	*Maximum Range °F**	*Accuracy Standard Grade*	*Accuracy Premium Grade*
Thermocouples				
Type J Iron vs. Constantan	32 to 1382	–346 to 2192	±4°F or 0.75%**	±2°F or 0.4%
Type K Chromal vs. Alumel	–238 to 2282	–454 to 2502	±4°F or 0.75% >32°F ±4°F or 2% <32°F**	±2°F or 0.4%
Type T Copper vs. Constantan	–328 to 662	–454 to 752	±2°F or 0.75% >32°F ±2°F or 1.5% <32°F**	±0.9°F or 0.4%
Type E Nickel-Chromium vs. Constantan	–274 to 1832	–454 to 1855	±3°F or 0.5% >32°F ±3°F or 1% <32°F**	±1.8°F or 0.4%
Type C Tungston-5% Rhenium vs. Tungston-26% Rhenium	0 to 4200	–32 to 4208	8°F to 767 1% to 4200	n/a
Type R Plat-13% Rhodium vs. Plat	32 to 2642	–40 to 3214	2.7°F or 0.25%**	1.1°F or 0.1%
Type S Plat-10% Rhodium vs. Plat	32 to 2642	–40 to 3214	2.7°F or 0.25%**	1.1°F or 0.1%
Type B Plat-30% Rhodium vs. Plat-6% Rhodium	32 to 3092	32 to 3308	0.9°F over 1472°F	n/a
Tungston vs. Tungston-26% Rhenium	32 to 4200	0 to 4200	±8°F for 32 to 800°F ±1% for 800 to 4200°F	n/a
Tungston-5% Rhenium vs. Tungston 26%-Rhenium	32 to 4200	0 to 4200	±8°F for 32 to 800°F ±1% for 800 to 4200°F	n/a
Tungston-3% Rhenium vs. Tungston 25%-Rhenium	32 to 4200	0 to 4200	±8°F for 32 to 800°F ±1% for 800 to 4200°F	n/a
Resistance Thermometers				
Platinum Class A RTD Alpha = 0.0385	–328 to 1000	–328 to 1562	°F = ±(0.27 + 0.0036*[t])***	
Platinum Class B RTD Alpha = 0.0385	–328 to 1000	–328 to 1562	°F = ±(0.54 + 0.009*[t])***	
Nickel 672 RTD	–94 to 572		±0.2 to 0.5% FS	
Copper 427 RTD	–130 to 500		±0.2 to 0.5% FS ±0.09°F spans <90°F ±0.18°F spans <135°F	
Thermistor	–150 to 600		±0.36°F spans <212°F	
Solid State	–67 to 300		±3.6°F for 32 to 250°F	
Non-Electric				
Liquid In Glass Thermometers	–40 to 700		±1 Scale Division	
Bi-Metallic Thermometers	–100 to 1000		±1% FS	
Filled System Thermometers	–320 to 1200		±1% FS	
Phase Change	100 to 3000		±1°F	

NOTES

* °C = 5/9 (°F – 32) and –°C = 5/9 (°F + 32)
** Error is greater of two designations
*** t = temperature span

the suitability of various sensors to that application. The suitability for the application may range from using a bimetallic dial thermometer for a water tank with an accuracy of ±2 to 5°F (1 to 3°C) to a temperature transmitter assembly with a resistance temperature detector (RTD) that can measure within ±0.02°F (0.01°C).

International Practical Temperature Scale

The International Practical Temperature Scale is the basis of most present-day temperature measurements. The scale was established by an international commission in 1948 with a text revision in 1960.[2] A revision[3] of the scale was formally

© 2003 by Béla Lipták

TABLE 4.1d

Temperature Sensor Selection Table

Measured Temperature	*Under 500°C*								*Above 500°C*							
Reading[1]	*Point*				*Average*				*Point*				*Average*			
Hostile Environment[2]	*No*		*Yes*		*No*		*Yes*		*No*		*Yes*		*No*		*Yes*	
Interference[3]	*No*	*Yes*	*No*	*Yes*	*No*	*Yes*	*No*	*Yes*	*No*	*Yes*	*No*	*Yes*	*No*	*Yes*	*No*	*Yes*
Sensors[4] Color Indicators	G(L)	G(L)	G(L)	G(L)					G(L)	G(L)	G(L)	G(L)				
Bimetallic Units	G	F	G(P)	F(P)												
Filled Elements	G	F	G(P)	F(P)	G(L)	F	F(P)	F(P)								
Resistance Bulbs (RTDs)	E	F	E(P)	F(P)	E	F	E(P)	F(P)	E	F	G(P)	F(P)	G(L)	F	G(P, L)	F(P, L)
Thermistors	E(L)	F	G(P)	F(P)	E(L)	F	G(P)	F(P)								
Thermocouples	G	F	G(P)	F(P)	F(L)	F(L)	F(L)	F(L)	E	F	E(P)	F(P)	F(L)	F(L)	F(L, P)	F(L, P)
Quartz Crystals	E(L)	F														
Radiation Pyrometers									E(L)	G(L)	E(L)	G(L)	E(A, L)	G(A, L)	E(A, L)	G(A, L)
Infrared Pyrometers	E(L)	E(L)	E(L)	G(L)					E(L)	E(L)	E(L)	E(L)				
Spectroscopic (Fraunhofer) Sensors															A	A
Thermopile					G(A)	F(A)							G(A)	F(A)		
Acoustic Time Domain Reflectometry (TDR)					D	D	D	D					D	D	D	D

CODE LETTERS:

D - in development

L - limited

F - fair

G - good

E - excellent

P - protective well reduces speed of response

A - detects the average temperature of an area

EXAMPLE: G(D)—This combination of code letters refers to a device which is a good selection for the particular service, but is not yet commercially available.

[1] This device either detects a point or the average temperature of some section of the process or of the refractory.

[2] The term “hostile environment” here is used to mean processes such as fluid beds, where the sensor is likely to experience the mechanical impact of high velocity solid particles.

[3] “Interference” refers to need to overcome temperature interferences due to hot refractories or to temperature differences between the carrier gas and the solid particles in it.

[4] For considerations of measurement error, span, cost stability, response time, linearity, materials of construction, etc., refer to the text.

© 2003 by Béla Lipták

TABLE 4.1e
Primary Temperature Points Defined by the International Practical Temperature Scale (IPTS-90)

Equilibrium Point	*°K*	*°C*
Triple Point of Hydrogen	13.81	–259.34
Liquid/Vapor Phase of Hydrogen at 25/76 Std. Atmosphere	17.042	–256.108
Boiling Point of Hydrogen	20.28	–252.87
Boiling Point of Neon	27.102	–246.048
Triple Point of Oxygen	54.361	–218.789
Boiling Point of Oxygen	90.188	–182.962
Triple Point of Water	273.16	.01
Boiling Point of Water	373.15	100
Freezing Point of Zinc	692.73	419.58
Freezing Point of Silver	1235.08	961.93
Freezing Point of Gold	1337.58	1064.43

adopted in 1990 and is reproduced in Tables 4.1e and 4.3a. Reproducible temperature points established by physical constants of readily available materials define the scale. Interpolation between these fixed points is made by platinum resistance thermometers when the temperature is below 1832°F (1000°C), and by platinum-platinum and 10% rhodium thermocouples (TCs) when it is higher. The National Institutes of Standards and Technology (NIST—formerly the National Bureau of Standards) has capability for calibrating temperature-measuring devices against these primary temperature points. These devices are secondary standards that are then used by manufacturers and users to calibrate other equipment. NIST's capability for calibrating temperature-measuring devices is illustrated in Figure 4.1f. This figure also shows the error (uncertainty) of other thermometers at different temperatures.

TEMPERATURE SENSORS

It is believed that Galileo invented the liquid-in-glass thermometer around 1592. Thomas Seebeck discovered the principle behind the TC—the existence of the thermoelectric current—in 1821. The same year Sir Humphry Davy noted the temperature dependence of metals, but C.H. Meyers did not build the RTD until 1932. The development of temperature sensors was a slow process until the middle of the 20th century. Today the application engineer can select from among over 20 different types of thermometers. In addition, the old practice of using only filled system thermometers, RTDs, or TCs throughout a particular industrial plant is giving way to the practice of selecting each temperature sensor for a particular application, just as each level or flow meter is individually selected. This requires a better understanding of the features and capabilities of the many thermometers on the market.

Nonelectric Temperature Sensors

Liquid-in-Glass Thermometers Most versions have used mercury or alcohol as the liquid. The element mercury is liquid in the temperature range of about –40 to 700°F (–38.9 to 356.7°C).[17] As a liquid, mercury expands as it gets warmer; its expansion rate is linear and can be accurately calibrated.

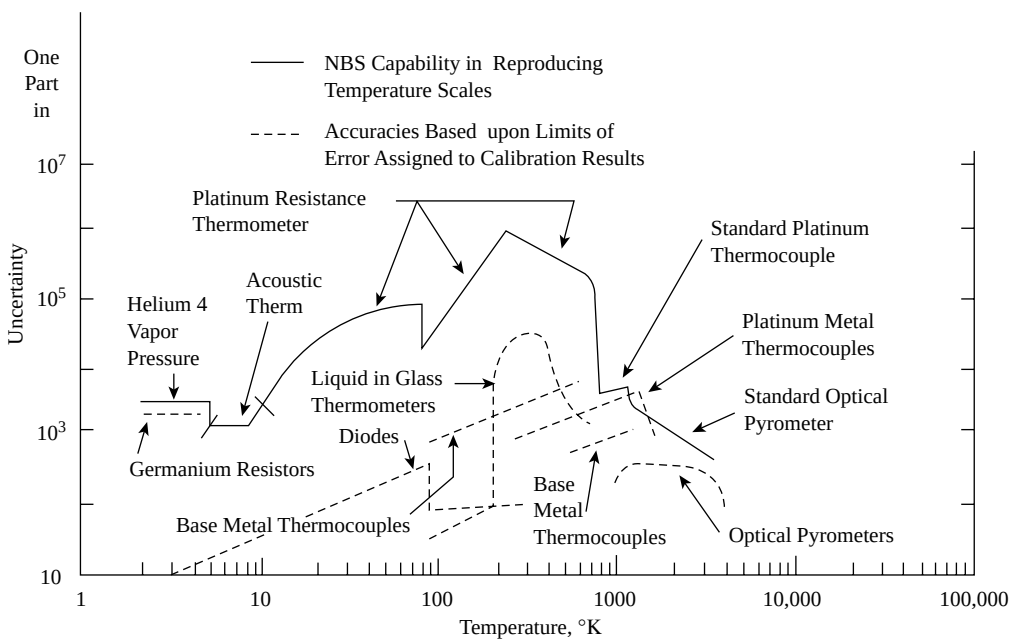

FIG 4.1f
Uncertainties in calibrating different temperature sensors at various temperatures. (From NBS Technical Note No. 262.)

© 2003 by Béla Lipták

Because of mercury's toxicity and the strict governing laws, the use of the mercury-in-glass thermometer has declined. One manufacturer has recently introduced a line of thermometers with a proprietary fill liquid offering the performance of mercury with none of the toxicity concerns.[8] For high accuracy applications, laboratory grade and reference standard models are available with calibration certification to NIST standards.

Bimetallic Thermometers Bonding two dissimilar metals with different coefficients of expansion produces a bimetallic element. These are used in bimetallic thermometers, temperature switches, and thermostats having a range of 100 to 1000°F (–73 to 537°C). When manufactured as a helix or coil, its movement with a change in temperature can move a pointer over a dial scale to indicate temperature. Dial thermometers ranging from pocket size to 5 in. dials are offered with a variety of local and remote mounting configurations.

Many process applications require use of a thermal well to allow for the removal or replacement of the thermometer while the process is pressurized.[9] Other designs include switches for on-off control that range from the simple wall thermostat to more rugged industrial models for simple process control or over-temperature protection. Other configurations include snap disk switches often used for over-temperature alarm and control. Low-end models are used in home furnaces, clothes dryers, and coffee makers. More rugged units find application in automobiles, trucks, and industrial machinery as over-temperature limits.

Filled System Thermometers Filled system thermometers have been used for decades. They have a useful range of 320 to 1200°F (200 to 650°C). Applications vary in sophistication from those for commercial appliances like cooking ovens and those used in heating, ventilation, and air conditioning (HVAC), to rugged industrial units suitable for a variety of applications. The filled system element can operate switch mechanisms as in ovens or for industrial shutdown controls. Some models have an analog output that may be connected to remote locations. Thermal systems filled with solid materials or mercury have all but disappeared. Most countries mandate the removal of any mercury-filled devices due to its extreme toxicity.

There are some models that use a vapor fill, but these suffer in applications where the temperature crosses the vapor/liquid point and causes liquification and loss of performance (typical is 0.25% per 25°F/14°C). Liquid filled units are the most popular, but consideration must be given to offsets due to the weight of the liquid head and compensation for capillary length. Thermocouples and RTDs are replacing filled systems in industrial process control applications. The low cost of electronic devices to read the output of TCs and RTDs and to indicate or control, together with the ability to locate the sensor independently of the receiving device, has made electronic means more attractive.[9]

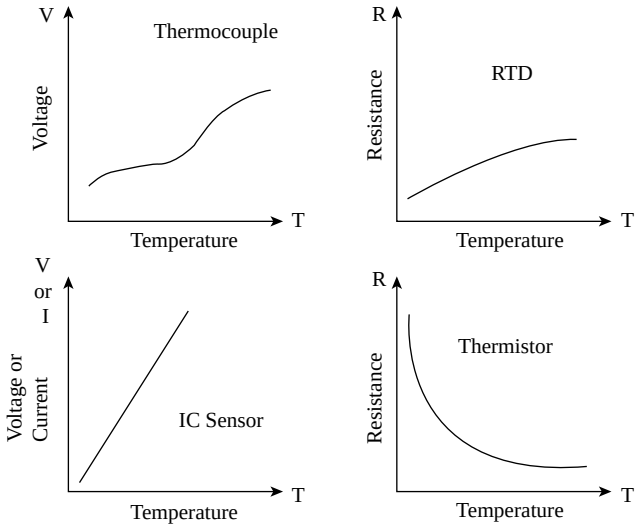

FIG. 4.1g
The characteristics of electronic thermometers.

Bistate/Phase Change Sensors These low cost nonelectric sensors are made from heat-sensitive fusible crystalline solids that change decisively from a solid to a liquid with a different color at a fixed temperature depending on the blend of ingredients. They are available as crayons, lacquers, pellets, or labels over a wide range of temperatures from 100 to 3000°F (38 to 1650°C). They offer a very inexpensive method for surface temperature visual verification within about 1°F. Monitoring minimum and maximum temperatures during shipment of perishable goods is a common application.

Electronic Thermometers/Sensors

Thermocouples A TC is an assembly of two wires of unlike metals joined at one end designated the hot end. At the other end, referred to as the cold junction, the open circuit voltage is measured. Called the Seebeck voltage, this voltage (electromotive force) depends on the difference in temperature between the hot and the cold junction and the Seebeck coefficient of the two metals. For a plot of the relationship between temperature and output signal refer to Figure 4.1g. For most industrial applications, the TC has been the popular choice over the years for a variety of reasons. Thermocouples are relatively inexpensive and can be produced in a variety of sizes. They can be of rugged construction, can cover a wide temperature range from 440 to 5000°F (262 to 2760°C), and are available in both standard and premium grade models.[9,15,16] Refer to Figure 4.1h for the error limits of a Type J premium sensor.

Every credible temperature transmitter, indicator, controller, or data logger will accept a direct TC input. For many applications, this is a viable solution. However, TCs produce a very small microvolt output per degree change in temperature that is very sensitive to environmental influences. Electromagnetic interference (EMI) from motors and electrical

© 2003 by Béla Lipták

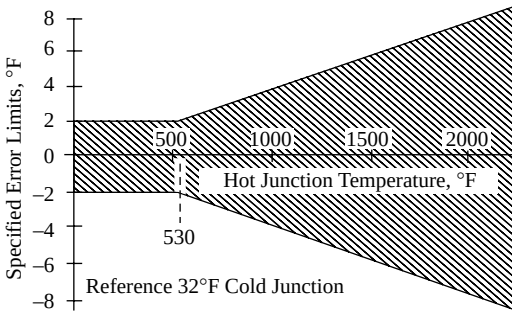

FIG. 4.1h

The error limits of an iron-constantan thermocouple manufactured to meet the "special" limits of ISA.

distribution and especially radio frequency interference (RFI) from walkie-talkies can produce dramatic errors in measuring circuits in these instruments. The user should insist on a noise reduction spec and an RFI immunity spec that will minimize these effects. A top quality instrument will offer Common mode noise rejection of 100 db, Normal mode rejection of about 70 db, and RFI immunity of 10 to 30 V/m.

There are some applications where a bare TC with an exposed junction may be used either by itself or inserted into a protective well. For most process applications, the TC is manufactured with a protective outer sheath that uses an insulating material to electrically separate the TC from the sheath and provide mechanical and environmental protection. In some cases, the TC junction is placed in direct contact with the tip of the sheath to increase speed of response. These sensors demand the use of an electrically isolated measurement circuit. Even insulated TCs will eventually suffer from a breakdown of the insulation and the TC tip will contact the sheath and associated well. It is virtually assured that a ground loop will be present that will cause measurement errors. These errors are usually insidious in that they usually vary over time and may go unnoticed. Recommended practice is to always use an instrument with full isolation to eliminate this concern.[9,10,12]

Another consideration for applying TCs is that their low output (about 40 μV/°C) limits the minimum span of even the best transmitters to about 60°F (35°C). RTDs are the usual choice for narrow span applications.

The most misunderstood drawback of using TCs is their inherent drift. The junction of the two dissimilar metals begins to degrade to some degree immediately after manufacture. For some types, used at low temperatures, this may only be a few degrees per year and may be calibrated out of the system. Other types used at higher temperatures degrade much more quickly. Consideration must also be given to any TC extension wire that is used for long wiring runs from the field location to the measurement instrument. Not only is its accuracy only about half as good as a TC, but also it is often subjected to harsh environmental conditions as it passes through the plant that will cause significant degradation and drift. Some plants replace their extension wire on a regular basis to minimize this effect.

Installing a top quality transmitter in the connection head of the TC will minimize many of the problems and concerns described above. Refer to Intelligent Temperature Transmitters in a later paragraph of this section.

Resistance Temperature Detectors RTDs are constructed of a resistive material with leads attached and usually placed into a protective sheath. The resistive material may be platinum, nickel, or copper with the most common by far being platinum. The relationship between the resistance change of an RTD vs. temperature is referred to as its alpha curve (see Figure 4.1g). The instrument used with the RTD must be configured to use the same alpha curve as the RTD or significant errors will occur.

As with TCs, there are some applications where an exposed sensor is suitable for the purpose. More commonly they are manufactured with a protective sheath that provides a hermetic seal to protect the sensor from moisture and/or contamination.[14] These protective sheaths are offered in a variety of lengths to provide the proper insertion into the process to obtain a representative measurement. The sheathed elements are often installed into a protective well to isolate the sensor from the process. One manufacturer offers a universal model that has only a 1 in. long sheath, but has long leads encased in a spiraled spring. The unit may be cut in the field to fit in any length of thermal well. This greatly reduces the requirements for stocking sensors in varying lengths.[7,11] Figure 4.1i shows this flexible sensor mounted with a transmitter.

There are very few applications for a 2-wire RTD since the error introduced by the leads can cause significant error. Measurement circuits that accept 3-wire inputs include a method of minimizing the effects of lead wire resistance as long as the outer legs are equal. However, factors such as terminal corrosion and loose connections can create significant differences between the lead resistances seen by the measurement circuit. A single ohm of difference between the legs is reflected as a 4.7°F (2.6°C) error.[13] Using a 4-wire measuring circuit eliminates this problem. The design engineer should consider any of the leading brands of temperature transmitters that accept 4-wire RTD inputs as a standard feature. Direct connection to remote devices with 3-wire extension cable will often produce errors that can be significant and will vary with environmental conditions. Refer to intelligent temperature transmitters later in this section for more detail.

Copper RTDs are most commonly used to sense the winding temperature of motors, generators, and turbines. Connecting them to an alarm trip provides an over-temperature shutdown function. Historically, 10-Ω copper RTDs were the norm, and accurate measurements of the small change in resistance change with temperature limited the accuracy to about ±1 to 2°F (1.6°C). Many users have now opted for 100 Ω or even 1000 Ω units to get higher resolution. They have

© 2003 by Béla Lipták

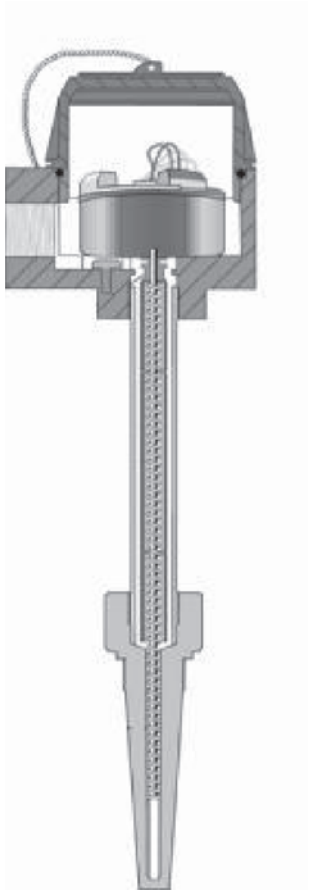

FIG. 4.1i
A flexible WORM sensor in a transmitter system. (Courtesy of Moore Industries-International, Inc.)

a useful range of –58 to 482°F (–50 to 250°C). Nickel RTDs have declined in use over the years primarily due to their limited range vs. the more popular platinum RTDs. The useable range is –112 to 608°F (–80 to 320°C). Most transmitters and alarm trips still offer the capability to accept nickel RTD inputs.

A concern common to all RTDs is that of error produced by self-heating. RTD measurement circuits measure the voltage across an RTD produced by passing a precise current flow through the RTD. A current flowing through a resistance produces heat that will appear as a positive offset to the actual process temperature at the RTD. The lower the measuring current, the less is this heating effect. It will be minimized by good thermal contact to the process fluid and is less of a concern at higher temperatures. A measure of the quality of an RTD measuring circuit is the amount of measuring current used. Circuits in better transmitters use about 250 μA. This current is typically higher for nickel and copper RTDs.

Thermistors Like the RTD, the thermistor is also a resistive device that changes its resistance predictably with temperature. Its benefit is a very large change in resistance per degree change in temperature, allowing very sensitive measurements over narrow spans. Due to its very large resistance, lead wire errors are not significant. However, there are several disadvantages to the thermistor:

1. It is a very nonlinear device and reasonable accuracy is obtained only over narrow spans (see Figure 4.1g).
2. It is quite small and will exhibit errors due to self heating.
3. Exposure to high temperature will cause a dramatic and permanent shift in its output characteristics.

Most applications of the thermistor are in commercial and laboratory applications. Few are used in industrial process control. Thermistors are designated by their resistance at 25°C with the most common value being 2252 Ω.

Radiation Pyrometers An infrared (IR) thermometer is a noncontact radiant energy detector. Every object in the world radiates IR energy. The amount of radiant energy emitted is proportional to the temperature of an object. Noncontact thermometers measure the intensity of the radiant energy and produce a signal proportional to the target temperature. The physics behind this broadcasting of energy is called Planck's Law of Thermal Radiation. This radiated energy covers a wide spectrum of frequencies, but the IR spectrum is most commonly used for temperature measurement. IR thermometers capture the invisible infrared energy that is naturally emitted from all objects warmer than absolute zero (0 K). Infrared radiation is part of the electromagnetic spectrum that includes gamma rays, x-rays, microwaves, ultraviolet, visible light, and radio waves. IR falls between the visible light of the spectrum and radio waves. IR wavelengths are usually expressed in microns with the infrared spectrum extending from 0.65 to 1000 μm.

In practice, the 0.65- to 14-μm band is used for IR temperature measurement over a range from –50 to 6500°F (– 46 to 3000°C). IR technology has become a viable and cost effective alternative to TC and RTD measurements in hostile environments like furnaces and in ovens where food, textiles, plastic, or glass are heated. The TC or RTD can only measure the temperature of its immediate surroundings and therefore cannot measure the actual product temperature. The actual temperature of the product will change due to variations such as line speed, thickness of the product, color, or roughness. The TC or RTD will not respond to these temperature changes quickly enough to permit close control. The IR thermometer will instantly measure the actual product temperature, not the environment surrounding the product.

IR thermometers are ideal for moving targets such as glass, plastic, and steel. They do not interfere with the process. They are also ideal for measuring products with very high temperatures or hostile environments. They can see through windows to measure products in a vacuum furnace or a semiconductor reactor. IR thermometers can measure targets as small as 0.025 in. in diameter and can respond in

© 2003 by Béla Lipták

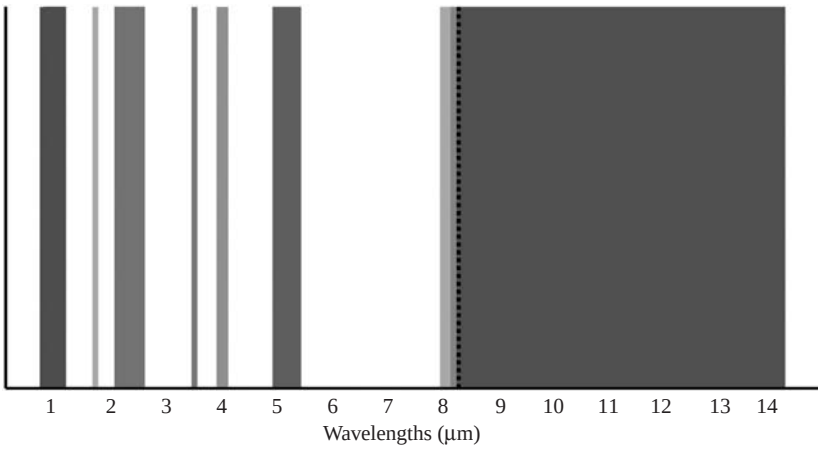

FIG. 4.1j
Infrared spectrum for practical measurement. (Courtesy of Ircon.)

10 ms to a temperature change. IR instruments operate at various wavelengths and Figure 4.1j shows the standard wavelengths that are available from most manufacturers. Each bar represents a series of instruments. The shortest wavelength band utilized is 0.65 μm and the longest is 8 to 14 μm. An instrument using a 0.65-μm wavelength can measure the higher range temperatures from 1400 to 6500°F (700 to 3600°C). Instruments with sensitivity to the 8- to 14-μm range can measure down to –50°F (–45°C).

Here are some guidelines for applications for the various wavelengths:

1. Wavelength bands centered on 0.65 and 2.6 μm are used for metals and can see through quartz windows. Fiber-optic systems for remote sensor applications are optional. Two color systems in these bands use slightly differing wavelengths to make their measurement.
2. The 3.4-μm band (±0.05 μm) and the 7.9-μm band (±0.15 μm) are used to measure thin plastic films. At these wavelengths, films as thin as 0.001 in. are opaque and only the surface temperature is measured.
3. The 5-μm band (±0.2 μm) is used to measure glass windows and containers.
4. The 7.9-μm band is also utilized for ceramics and very thin glass.
5. The 8- to 14-μm wavelength is probably most commonly used for low temperature applications for textiles, paper, and food. It also is a very common wavelength for portable infrared thermometers.

Distance does not affect the measurement. Models are available that can measure from 1 to 300 ft (0.3 to 91 m). However, IR sensors measure the energy from a circular spot on the target, and the size of that spot is a function of the distance between the sensor and target. The farther away from the target the sensor is, the larger the spot (Figure 4.1k). Consequently, distance is limited by the size of the object you want to measure. Some models offer a low power laser

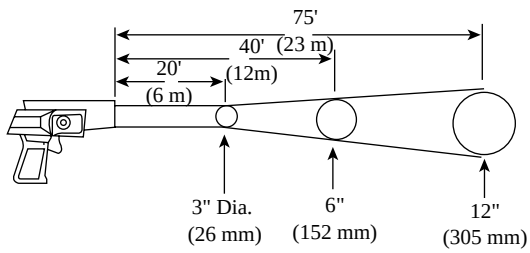

FIG. 4.1k
Typical target sizes and distances of portable infrared thermometers. (Courtesy of Wahl Instruments Inc.)

that facilitates proper aiming. Where a direct line of sight to the target is not possible, models with a fiber-optic connected sensor system often can solve the problem. Fiber optics allows installations into difficult locations up to 30 ft from the instrument. They can withstand ambient up to 400°F (200°C) without cooling. The lowest target temperature for these systems is about 1300°F (705°C). At least one manufacturer offers an instrument with an optical aiming system that may be viewed on a TV monitor to ensure proper aim at the target.

There are many applications for wire drawing, annealing, and vacuum furnaces where the sighting must be made through dirty windows. Other applications have small windows, obstructions in the sight path, or dusty atmospheres like those found in steel mills. For all these applications, the Two-Color or Ratio Thermometer provides an excellent solution.[20] This instrument utilizes two detectors operating at two wavelengths to measure one hot target. They can measure temperatures from 500°F (250°C) up to 6500°F (3500°C) and, by using sensors with two different wavelengths, can eliminate the interference problems. In addition, they can measure targets that do not completely fill the optical spot size of the instrument.

The installation of an IR thermometer requires attention to detail to ensure successful operation. Figures 4.1l and 4.1m

© 2003 by Béla Lipták

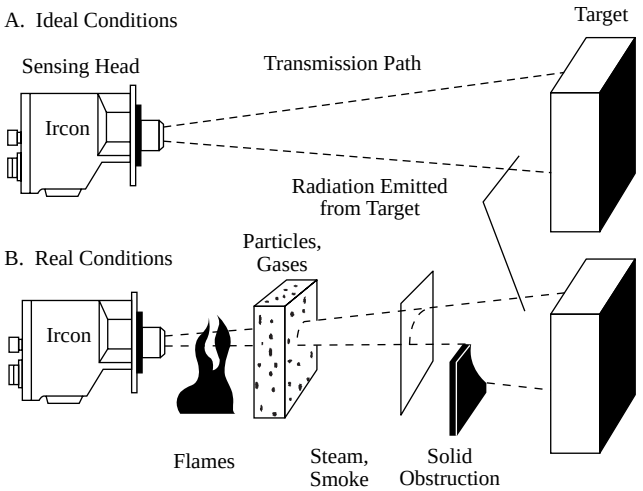

FIG. 4.1l
A comparison of ideal vs. real installation for IR thermometers. (Courtesy of Ircon.)

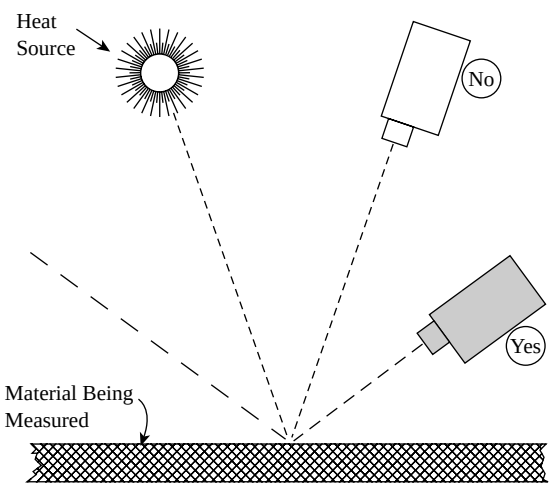

FIG. 4.1m
The infrared thermometer must be carefully aimed to avoid focusing on reflected solar radiation.

explain some of the problems with installation of IR thermometers. Ideally, a clear unobstructed line of sight is required and the target has to be large enough to fill the cone of vision. The spot size required is related to the distance to the sensor, and the user should consult the manual for details. Solid obstructions have to be removed or eliminated from the field of view by possibly aiming the instrument at a different angle or by using a fiber optic remote sensor system. For applications with sighting windows, the instrument must be selected to use a wavelength that will pass through the window material unchanged. The window also must be large enough so as not to obstruct the cone of vision. It also has to be kept clean by possibly using an air purge. Smoke, steam, and dust all cause temperature fluctuations.

Most IR thermometers have an electrical feature called a Peak Picker. This is a simple circuit that picks the peak

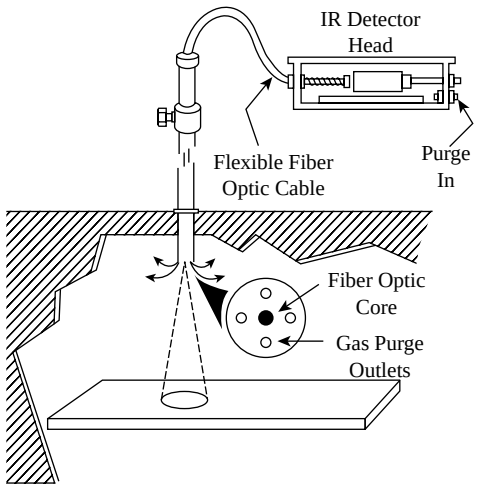

FIG. 4.1n
Purged fiber-optic elements can detect the temperature of small, moving surface areas in hostile environments such as furnaces. (Courtesy of Omega Vanzetti Systems Inc.)

temperature and does not allow the signal to decay when dust obstructs the field of view. Flames are also a consideration. Clean gas flames are transparent to most thermometers while coal, oil, or garbage flames are opaque and no thermometer can see through them. The actual temperature of oil, coal, or garbage flames can usually be measured with the two-color instrument. Most sensors can operate in environments up to 145°F (65°C). For hotter ambient environments, water or air-cooling is required (Figure 4.1n). IR instruments should be calibrated once a year using a certified blackbody.

There is a growing market for line scanners that can produce a two-dimensional thermal image. This type of IR thermometer is used to measure wide webs such as hot strip steel, glass, plastic, and paper. This instrument utilizes one detector and two 45-degree mirrors with one mirror rotating and scanning over a 90° angle as shown in Figure 4.1o. For moving targets, the instrument uses a software technique to create two-dimensional thermal images of the moving web. The software provides temperatures at any location on the web and can provide output signals that can be used for closed loop control or stored for future review.

Thermal imagery is a rapidly growing application of IR technology that is used on some automobiles and by military and law enforcement in night vision applications. Architectural analysis of building insulation, surveillance, and quality control are other uses. This imaging system is an IR thermometer that uses a detector called a focal plane array instead of a single sensor. Its functionality is similar to a digital camera, except that, instead of capturing photographic images, each pixel measures temperature. A two-dimensional image is created using software resident within the system. The detector can have as many as 76,000 pixels. The image of the temperature profile can be used for closed loop control of processes, such as detecting defective personal computer (PC) boards, or stored away for future analysis.

© 2003 by Béla Lipták

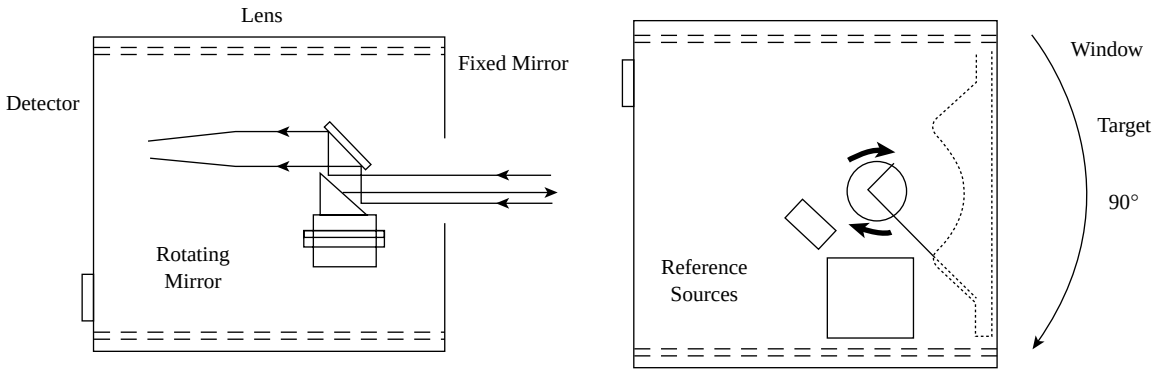

FIG. 4.1o
Schematic of line scanner IR thermometer. (Courtesy of Ircon.)

Most manufacturers of IR instruments continue to refine existing products and offer enhanced capability with newer models. One new model offers bidirectional digital networking communications. Multiple sensors can connect to host systems for monitoring, control, and diagnostics. The design engineer is strongly urged to consult with multiple vendors to get recommendations for selecting the proper instrument for each application.

Solid-State Sensors The small solid-state sensor converts a temperature input into a proportional current output over a range of –67 to 300°F (–55 and 150°C) (see Figure 4.1g). It is especially suited for PC boards or heat sink mounting for special temperature measurement and control applications where solid-state reliability, linearity, and accuracy are required. They can be used to determine minimum, average, and differential temperatures, in addition to being used for TC cold junction compensation and temperature control applications. With prices beginning under $10, these sensors are gaining popularity. Diodes are typically used in cryogenic applications over a range of –455 to 396°F (–271 to 202°C) and can be accurate to 0.05°C when properly calibrated.

Heat-Flow and Thermal-Conductivity Sensors The accurate measurements of heat flow through thermal insulators and of the thermal conductivity of construction materials are both important. Such measurements are of interest not only to architects, but also to engineers who are involved with safety and energy conservation.

A common heat flowmeter design involves the placing of a thin plate of known thermal conductivity on a heat-radiating surface. It has been found that the heat flow through these elements is directly related to the temperature difference through them. This temperature difference is often detected by thermopiles—a large and even number of TCs connected in series in such a manner that their high-temperature junctions are on the inside and their low-temperature junctions are on the outside surface of the sensing element (Figure 4.1p). The heat flows that are encountered in different processes range from about 10 k-cal/m^{2}h through freezer walls to about

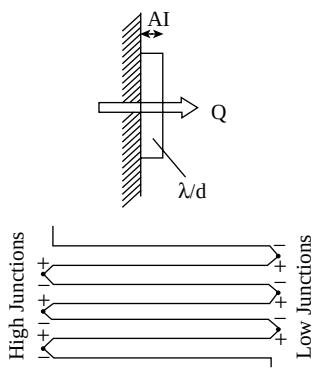

FIG. 4.1p
Knowing the thermal conductivity (λ) and the sensor plate thickness (d), the measurement of temperature difference (ΔT) can be converted into heat flow (Q), because Q = (λd) ΔT.

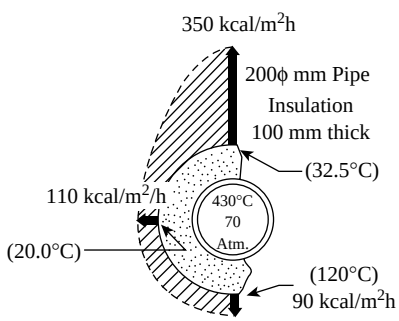

FIG. 4.1q
The measurement of surface heat loss from an insulated steam pipe. (Courtesy of Showa Denko K.K.)

100,000 k-cal/m^{2}h through the shells of water-cooled electric furnaces. The thickness of the sensor plates is a few millimeters, and the plates are made of rubber, organic materials, or other heat-resistant materials, sometimes contained in a thin, stainless steel disk case.

The heat-flow distribution frequently varies with the direction of heat flow. For example, Figure 4.1q shows that

© 2003 by Béla Lipták

the heat loss from the top of a steam pipe was found to be much more than through the bottom surface. Such findings are usually explained by noting that heat flow from a surface is not only a function of the surface temperature, but also of the effects of coating. It has been found that if a surface is coated with bright and glistening aluminum paint, it will radiate much less heat at the same temperature as a surface where the coating has worn off. Sensor elements can measure the variations in heat flow at different points on many shells, from liquefied petroleum gas (LPG) tank walls to electric and blast furnace shells, and their readings can reveal the erosion of linings as well as other hard-to-detect phenomena.

In other processes the interest is in measuring the thermal conductivity of heat insulating substances. Thermal conductivity instruments are designed to measure thermal conductivities of solid materials in the range of 0.001 to 10 W/mK. Typical materials with conductivities in this range are foam, insulation, polymers, composites, glass, silicon, natural fibers, and rock. One vendor offers a model that is an interfacial heat reflectance device that contacts a constant current heat source to the sample. The temperature of the interface is monitored and the rate of temperature rise is related to the thermal conductivity of the unknown sample.[21] Higher thermal conductivity samples produce a lower rate of temperature rise because the heat is being conducted away from the interface. The heating element of the probe provides a one-dimensional heat flow. The entire element must be covered during testing, establishing the minimum flat surface area of 5 × 25 mm. The probe calculates the value of thermal conductivity (k) given known values of heat capacity (Cp) and density (r). If these parameters are unavailable the results give the effusivity of (KrCp)1/2.

The hot wire method of thermal conductivity measurement involves the stretching of a thin heating wire through a sample and applying a constant amount of power (Figure 4.1r). The higher the thermal conductivity of the sample, the lower will be the resulting surface temperature of the heater wire. Therefore, it is possible to read the surface temperature of the heater wire and interpret from that reading the thermal conductivity of the sample.

The thermal conductivity of an unknown substance can be determined by first recording the surface temperature response curve (time vs. temperature) of the wire while the wire is surrounded by a known thermal conductivity material. After that, half of the known sample can be replaced by a material having an unknown conductivity. After repeating the test, the difference in the response curves can be correlated to the thermal conductivity of the unknown substance. In the sensor shown in Figure 4.1r, the heated wire is surrounded on the top by a material of known thermal conductivity; therefore, when it is placed on the flat surface of the unknown sample, its temperature response curve will reflect the thermal conductivity of that substance.

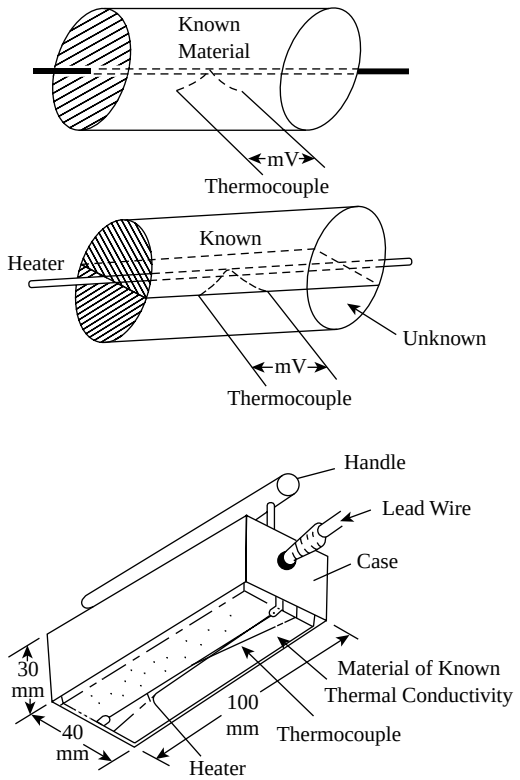

FIG. 4.1r
The design of a thermal conductivity sensor. (Courtesy of Showa Denko K.K.)

INTELLIGENT TRANSMITTERS AND REMOTE INPUT/OUTPUT (I/O)

This first volume of the *Instrumentation Engineers' Handbook* is devoted to measurement. While the transmission and control related topics are covered in Volume 2 and networks and buses in Volume 3, this paragraph is included here as it relates to the general topic of temperature monitoring.

Microprocessor-based temperature transmitters have continued to evolve in sophistication and capability such that there is no credible transmitter on the market today that does not use this technology. A transmitter includes an input circuit referred to as an analog-to-digital (A/D) converter that converts the sensor input signal from its analog form into a digital representation for presentation to the microprocessor. The microprocessor performs all of the mathematical manipulations of ranging, linearization, error checking, and conversion. The output stage accepts the resultant digital representation of the current value of the measurement and converts the signal back to an analog signal (D/A) that is typically a 4- to 20-mA DC current. For some special applications, 0 to 1 Vdc or 0 to 10 Vdc signals may be used and in others the signal is transmitted digitally using either an open or proprietary protocol. Some countries have adopted 0 to 20 mA as the standard transmitted signal.

Just as microprocessors have evolved in sophistication, so have A/D converters. Eight-bit resolution devices common in

© 2003 by Béla Lipták

the 1960s provided a resolution of about ±0.4%. In 2000, the first 21-bit resolution A/D was used in a temperature transmitter providing a resolution of ±0.00005%. D/A converters have also evolved with resolutions increasing from 8-bit up to the 18-bit versions used in the better transmitters beginning in 2000. The result of combining these technologies is a universal transmitter that accepts inputs from any TC, RTD, mV, resistance, or potentiometer signal; checks its own calibration on every measurement cycle; has minimal drift over a wide ambient temperature range; incorporates self-diagnostics; and is configured using pushbuttons or simple PC software.

The reconfiguration process is quick and convenient, and it tends to allow for lower inventories by making the transmitters interchangeable. Some transmitters are capable of handling dual RTD elements. This allows for temperature averaging, temperature difference measurement, or automatic RTD sensor switchover if the primary sensor fails in a redundant installation. Due to terminal limitations, these models can only accept dual 3-wire RTDs. Caution must be used to minimize lead resistance differences to reduce the error.

Fieldbus Structures

In the 1980s, another level of capability was added to field devices. Rosemount developed the Highway Addressable Remote Transducer (HART) protocol to enable detailed information about the setup and operation of the device to be superimposed onto the 4- to 20-mA signal. This protocol was soon released to the public domain. The HART Communication Foundation promotes its use in industry and supports its maintenance and growth. The benefits of remote configuration and access to diagnostics have encouraged the dramatic increase in use of HART-enabled instruments.[22]

During this same time period, a variety of proprietary protocols emerged supported by many of the larger manufacturers that provided comparable benefits of remote setup and diagnostics. Unlike the HART protocol, these products were limited to use within the manufacturer's system. In the 1990s, a trend emerged for more open protocols to enable plug-and-play of instruments from varying manufacturers to work as part of a fieldbus structure.

Two that have emerged as leaders are Foundation Fieldbus and Profibus. Each has their proponents and support groups that have been promoting their acceptance. Temperature transmitters, as well as other field and control room devices, must incorporate the specific fieldbus technology to be used in these systems. The support tends to favor using fieldbus technology for new plant construction and major upgrades where all new instrumentation and cabling would be required. Existing plants with properly functioning legacy instruments are more likely to stay with existing technology.

In 1979, Modicon introduced the MODBUS protocol as a means of exchanging data between field devices and controllers. This protocol serves as a means to share data among multiple vendor devices. It is now owned by Schneider Automation and is freely available for use. There are several temperature multiplexers on the market that can communicate with a host system using MODBUS, MODBUS Plus, or MODBUS TCP/IP protocols.[23]

Ethernet communication has been used for interconnection of digital equipment in offices and control rooms for many years. Its use is now migrating out onto the factory floor. There are a variety of products introduced beginning in 2002 that will interface process measurements, including temperature, over high speed Ethernet links to host systems using OPC (object linking and embedding for process control) servers.

There is more to making a measurement than the transmitter itself. The weakest link in virtually all measurements is the temperature sensor. The vast majority of temperature measurements are made with either a TC or an RTD. As with the electronic devices described above, sensors have also demonstrated dramatic increases in precision and reliability over the years. Higher purity materials and improved manufacturing processes have provided sensors that more closely match theoretical curves and exhibit lower drift than sensors of the 1980s and the 1990s. It has been generally accepted that the more closely a sensor matched its ideal characteristics, the more accurate the measurement will be since transmitter measuring circuits refer to the ideal data to make the measurement.

Advanced Transmitters

More advanced transmitters incorporate the ability to match the sensor to the transmitter to minimize this error. One method uses the Callander van Deusen method, which defines three experimentally determined constants that define the temperature/resistance relationship specific to an RTD. By entering these data from the RTD tag into the transmitter's firmware, the sensor and transmitter become a calibrated system. Typical accuracies for this technique are about ±0.4°F. For higher precision, at least one vendor offers a bath calibration technique that allows the transmitter to capture actual values output by the RTD or TC at specific temperatures. This method provides system accuracies of about ±0.02°F (0.1°C) for RTDs and about ±2°F (1°C) for TC measurements. Maximum performance is gained by selecting the trim points to bracket the operating point.[24]

Direct connection of temperature sensors to input subsystems of distributed control systems (DCSs) or programmable logic controllers (PLCs) is an alternative to using a temperature transmitter for each measurement. This may sound like a way to cut costs. In actuality, on an installed basis, it is more expensive, far less accurate, and not as robust. It may be suitable for less demanding data acquisition or control applications where wider variations in the measurement can be tolerated. The benefits of using transmitters include higher precision, sensor-transmitter systems calibrated to the range of interest, better RFI immunity and noise rejection, transmitter diagnostics, lower wiring costs, less expensive input/output (I/O) cards, faster loop checks, and shorter start-ups.

© 2003 by Béla Lipták

The array of intelligent temperature transmitters on the market seems almost endless. Some common features of the leading models are: universal inputs from any TC, RTD, mV, resistance or potentiometer; loop-powered with 4–20 mA output; digital outputs, and configuration with pushbuttons, PC software, or a handheld configurator. Choices must be made for which protocol is required: HART, Foundation Fieldbus, Profibus, vendor proprietary, Ethernet, or just 4 to 20 mA. Some field locations will benefit from local indication and this feature is optional with most manufacturers. There is a considerable cost and performance benefit afforded by purchasing the sensor and transmitter as a system. This saves cost by offering single source responsibility. For applications where it is prudent to separate the sensor from the transmitter, DIN (Deutsch Industrie Norm) rail-mounted transmitters may be grouped in a marshalling cabinet at a convenient location.

TEMPERATURE MEASUREMENT APPLICATIONS

High Temperature Measurement

There are two viable methods for measuring temperatures up to 2000°F (1100°C): special high-temperature TCs and IR pyrometers. At high temperatures TCs are installed into protective wells or protection tubes. When installed horizontally, wells tend to droop causing binding on the TC element when it must be removed for replacement and a new one inserted. The latest design of a TC incorporates a 1 in. sheath with a flexible cable that can easily be inserted into even badly drooping wells.[11] Upper limit for this sensor is about 2000°F (1100°C). Ceramic wells do not suffer from droop but have other limitations of low surface strength, brittleness, and low erosion resistance. IR pyrometers offer a very viable noncontact method to measure temperatures all the way up to 6500°F (3600°C) and would be the best choice for most applications. Refer to the detailed description above for additional detail.

Speed of Response

The fundamental problem of measuring the temperature of a fluid is one of assuring strong thermal coupling. For a fluid temperature measurement to have meaning, the sensor must come to equilibrium with the temperature of the fluid. The difference between the equilibrium temperature of the sensor and the fluid temperature is a direct error. The most common process temperature measurements are made with TC and RTD sensors. Commercial and laboratory applications often use exposed TC beads or RTD elements to obtain fast response in clean environments.

Refer to Figure 4.1s for representative mounting configurations. There are very few industrial measurements where an exposed sensor would be used. This is because the process of taking the sensor out of service would release pressure or

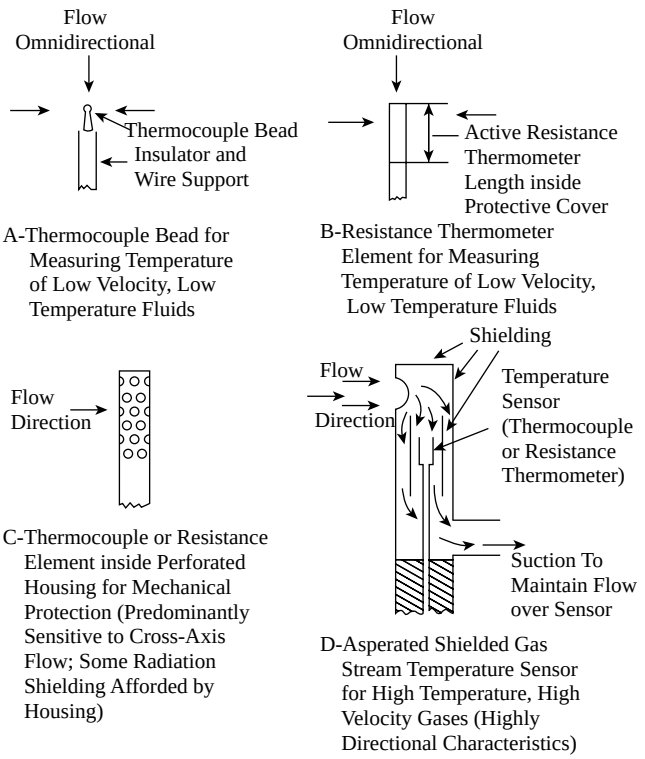

FIG. 4.1s
Fluid stream sensor configurations.

product from the pipe or vessel where the measurement is being made. Therefore, most applications use thermal wells to isolate the sensor from the process. Accordingly, the mass of the well and the piping into which it is inserted are the dominant causes of thermal lag and conduction errors. These errors can be almost insignificant for processes with stable temperatures and rapid flow. However, for dynamic temperature fluctuations or where there is little flow across the sensor, the errors can be large.

There are various designs of high speed of response sensors but most are limited by being manufactured with a protective sheath that runs the length of the well providing a long and massive path for thermal losses. A new design uses low mass RTDs or TCs in a 1 in. (2.54 cm) sheath to minimize this effect.[11] To further increase the response, the sensor is spring loaded against the tip of the well and inserted with thermally conductive grease. One well manufacturer offers a finned thermal well providing dramatic improvement in the response.[25] Fast response is especially valuable for gas applications. Some of the better transmitters update their output several times per second and therefore are rarely the limiting factor in the measurement.

Surface Measurement

Measuring the surface temperatures of moving objects like webs of paper, plastics, textiles, and metals of rotating cylinders (such as calendar rolls, rotary kilns, or drier cans) requires

© 2003 by Béla Lipták

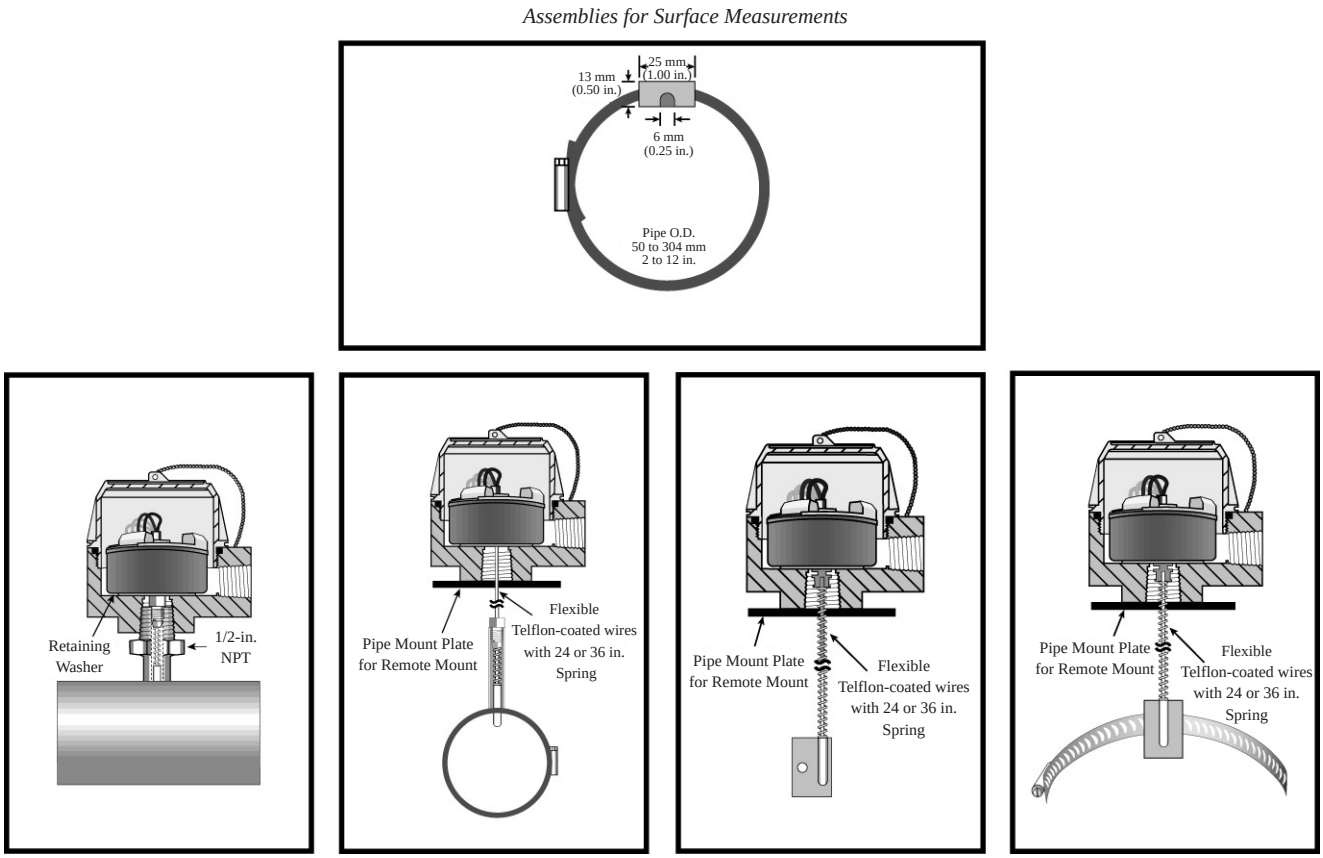

FIG. 4.1t

Mounting configurations for surface mounted thermocouple and RTD sensors. (Courtesy of Moore Industries-International, Inc.)

special consideration. IR pyrometers offer a cost effective method as described above for many industrial applications. They offer many advantages, including high accuracy and fast response, and are especially suited to moving surfaces. However, for stationary surfaces, often a less sophisticated and less costly method is called for. The phase shift products offer a visual measurement but have no other output.

There are a variety of mounting methods where either a TC or an RTD may be affixed to the outside of a pipe or vessel and be connected to a transmitter or data logger to get continuous information. The design of the mounting hardware and its proper installation are critical in obtaining a representative surface temperature. The thermodynamics of the application are complicated by the thermal losses to the surrounding atmosphere, thermal lag of the wall of the vessel or pipe, and the rate of change of the medium. A properly designed system will use a low mass sensor with high speed of response inserted into a fixture that places the sensor tip as close as possible to the surface being measured. Refer to Figures 4.1t, 4.1u, and 4.1v for some typical examples of mounting configurations.

Measuring the Temperature of Solids

Determination of the allowable size and configuration of the sensor requires some knowledge of the heating or cooling conditions together with an estimate of the magnitude of the temperature gradients that are likely to exist in the region in which the measurement is to be made. A simple rule-of-thumb indicator to determine if significant gradients are likely to be present is the magnitude of the Biot modulus (hL/K), where h is the surface heat transfer coefficient, L is the smallest dimension of the solid, and K is the thermal conductivity of the solid. If this modulus is over 0.2, significant temperature gradients are likely to exist in the solid, and care should be exercised in choosing the size, location, and orientation of the sensor within the solid. If the Biot modulus is less than 0.2, no significant gradient is expected and a measurement anywhere on or within the solid should give identical results regardless of size or configuration of the sensor. If significant gradients are likely to exist, the maximum rate of heat transfer to the surface of the solid must be known or estimated, and the maximum gradient at the point measurement must be determined. The following relationship allows the maximum gradient at the surface of a solid to be calculated:

$$\frac{\Delta T}{\Delta X} = \frac{q}{K} \qquad \textbf{4.1(1)}$$

© 2003 by Béla Lipták

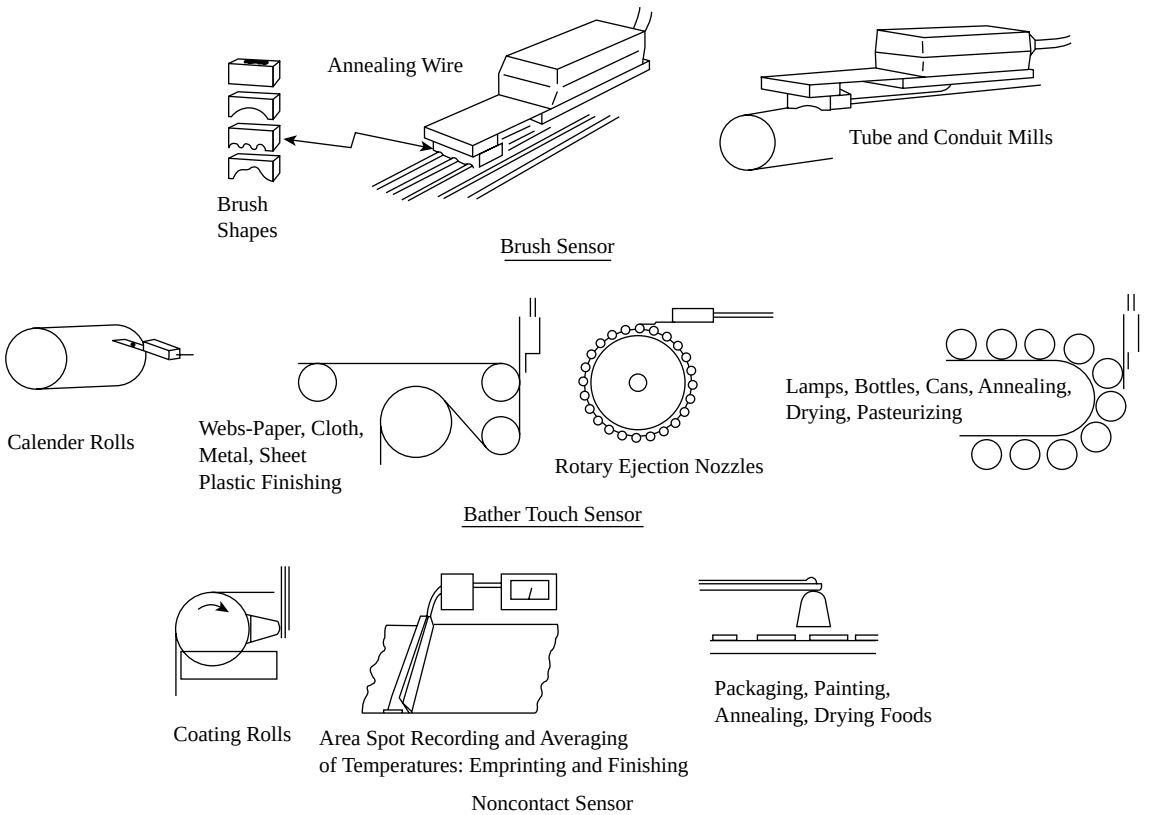

FIG. 4.1u
Thermocouple-type surface temperature sensor designs. (Courtesy of Syscon International Inc.)

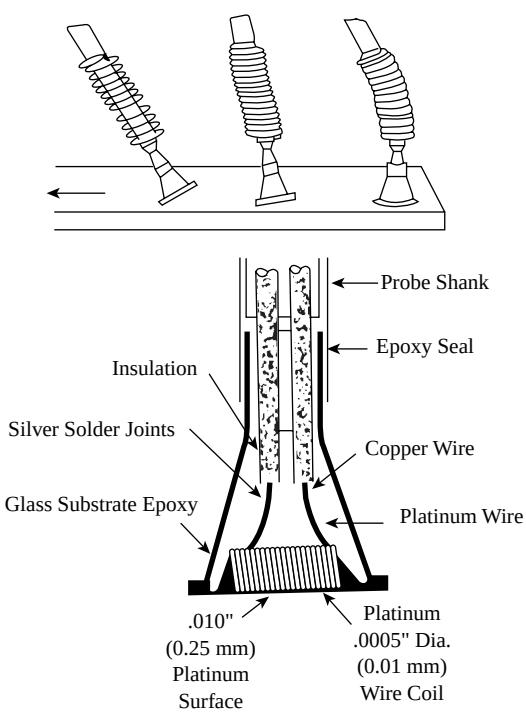

FIG. 4.1v
RTD-based surface-temperature detector. (Courtesy of Wahl Instruments Inc.)

where

$\Delta T/\Delta X$ = temperature gradient at the surface
q = heat transfer rate per unit area at the surface
K = thermal conductivity of solid

Under certain conditions of heating or cooling, if measurements at points other than the surface are important, it may be necessary to evaluate anticipated heat transfer conditions and resulting temperature gradients.[4,5]

On the basis of this gradient, it is possible to establish limits on the size of the sensing device. For example, the length of any one of the three dimensions of the sensor (lead wires excluded) should not be greater than the distance between two points of the process that are different in temperature by more than the acceptable measurement error. It is assumed that the sensors are in satisfactory thermal coupling with the process material, which is not always the case. If the thermal coupling is poor, the sensor will not reflect the true temperature history that was experienced by the solid. This condition can produce dynamic errors.[6]

The best thermal coupling is achieved by direct bonding of the sensor, such as welding a TC to the solid surface or into a cavity within the solid. The bond line between the sensor and the solid should be kept as thin as possible and should not fracture or fail during thermal cycling. Various epoxy and ceramic cements, with fillers to improve their

© 2003 by Béla Lipták

conductivity, have been successfully used for such bonding. For example, a flat RTD, which is bonded to a surface with a 0.005 in. (0.1 mm) thick epoxy bond line will produce a lag time of about 1 s. This will give a dynamic error equal to the rate of temperature rise of the surface, because a dynamic error of 25°F (14°C) corresponds to a rate of surface temperature change of 25°F/s.[6]

Methods of installing temperature sensors on or within solid bodies are shown in Figure 4.1w.

Averaging Measurements

There are different considerations depending on the application. The solution is different for liquids, gasses, or solids and also depends on the accuracy and speed of response required and what is to be done with the measurement results. For a temperature profile in a storage tank that is to be used for volume correction for inventory, an array of high accuracy RTDs would be the appropriate choice. There is one manufacturer that can supply a flexible array of almost any length for easy field installation. The receiving device would then average the input from the various sensors and exclude those not covered by product based on the level measurement. There are tank-gauging companies that specialize in this application.

For a high temperature reactor or furnace, the sensing array would use TCs to generate the signal that can then be averaged in software by a receiving device. For large air ducts for furnaces or clean room circulation, a highly accurate average temperature is obtained by using an RTD sensor that is constructed with a continuous resistive element so as to eliminate hot spots. This special RTD should be a 4-wire construction and be used with a 4-wire measuring circuit like what would be found in a high quality transmitter to obtain an accurate temperature measurement. For gas flow in pipes an RTD and transmitter assembly is an appropriate choice. If the application is for temperature compensation for a mass flow calculation, a 4-wire RTD trimmed to match a quality transmitter will provide the highest accuracy. Such systems are available with accuracies of ±0.02°F (0.01°C).

For stationary or moving surfaces of almost any size, the IR pyrometer is the best choice over any range.

Narrow Span Measurements

When the operating point of an application is stable, higher accuracy can be achieved by reducing the span of the measuring instrument. For example, when measuring temperature of a process that operates at 125° with a variation of ±10°, a range of 0 to 150° would be well suited. An instrument ranged from 0 to 600° would have 4 times less resolution. TCs are generally limited to a minimum span of about 63 to 180°F (35 to 82°C), depending on type, while spans using a 1000-Ω Platinum RTD with a high quality transmitter may be as low as 2°F (1°C). Matching a sensor to its transmitter offers the highest possible accuracy.

INSTALLATION CONSIDERATIONS

When making temperature measurements, two ways have traditionally been employed to get process readings from the point of measurement back to a monitoring and control system.

One method is to utilize sensor extension wires to carry the low-level signals (Ω or mV) generated by field-mounted RTD or TC sensors. Another is to install temperature transmitters at or near the measurement point. The transmitter amplifies and conditions the sensor signal and transmits it over a twisted wire pair back to the control room.

Direct wiring strategies have generally been considered less expensive and sometimes easier. Transmitter use, because of cost considerations, was often reserved for important loops and applications where signal and loop integrity was a must.

Today, highly functional, yet very affordable, microprocessor-based field-mount temperature transmitters are comparable in price to direct wiring strategies. There are additional advantages of using intelligent transmitters that will, in most applications, also save considerable time and maintenance headaches. This is especially true when the measurement point is located a long distance from the readout and control system.

Temperature Transmitters in Place of Direct Wiring

Lower Wiring Costs Direct wiring sensors to a control system requires the use of sensor extension wires. Not only are extension wires fragile, they also cost three times more than the common shielded copper wire used for a temperature transmitter's 4 to 20 mA signal. Using the less expensive wires, transmitters can pay for themselves in wire and conduit costs alone. The longer the wire run, the greater the potential savings.

In retrofit situations, temperature transmitters can be installed at the sensor, and the in-place RTD or TC extension wires can be used to transmit the 4 to 20 mA back to the control system. There is no need to run new copper wires to accommodate the 4 to 20 mA. No additional installation time or material costs (including conduit) are incurred, and you still get all of the advantages of using temperature transmitters.

Protect Signals from Plant Noise Common in nearly every industrial environment, RFI and EMI can negatively affect process signals. Some of the common sources include mobile and stationary radio, television, and hand-held walkie-talkies; radio-controlled overhead cranes; radar; induction heating systems; static discharge; high-speed power switching elements; high AC current conductors; large solenoids and relays; transformers; AC and DC motors; welders; and even fluorescent lighting.

If there is one or more of these in your plant, RFI/EMI problems are likely. The result is sometimes just a minor inconvenience. Other times it can be as serious as a plant shutdown.

© 2003 by Béla Lipták

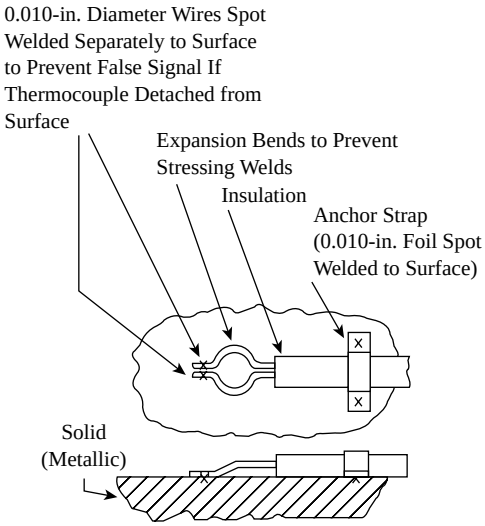

A-Typical Thermocouple Installation for Junction Formed through Solid by Direct Spot Welding to Surface

Characteristic:
1. Fast Response
2. Simple to Install
3. May Cause Disturbance to Flow Pattern under High Speed Forced Convective, Compressible Flow

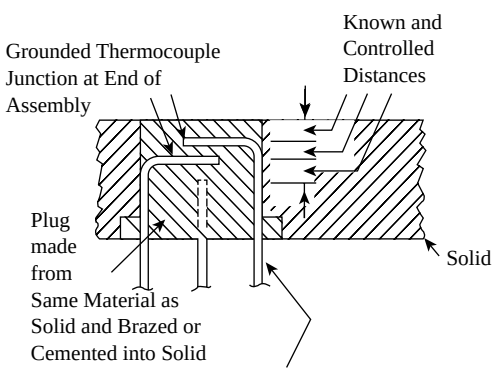

Thermocouple Assemblies Formed from 0.025-in. OD Metallic Clad Thermocouple Wires with Swaged Ceramic Oxide Insulation. Assemblies Embedded in Plug by Brazing, Cementing, or Electroforming to Ensure Intimate Thermal Contact with Plug

C-Typical Embedded Thermocouple Installation in Solid

Characteristics:
1. Allows Measuring Gradients within Solid
2. No Disturbance to Fluid Flow Pattern at Heated Surface

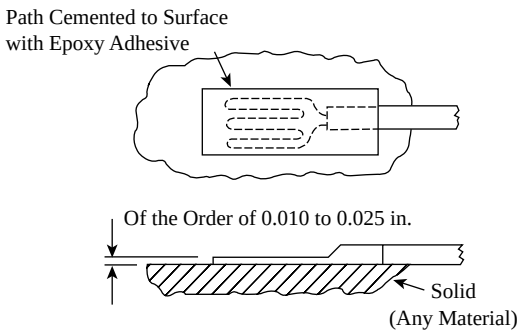

B-Typical Resistance Thermometer Path Installation on Surface of Solid

Characteristics:
1. Same as "A"

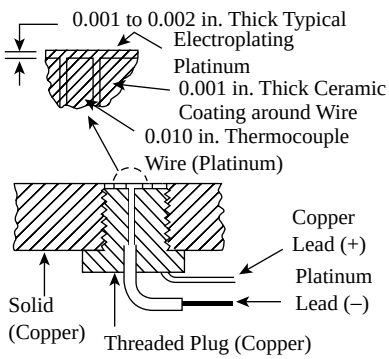

D-Surface Thermocouple for High Surface Heating Rates

Characteristics:
1. Responds at Same Rate as Solid at Same Depth
2. No Disturbance to Fluid Flow Pattern at Heated Surface
3. Minimum Disturbance to Natural Heat Flow in Solid
4. Applicable under Extremely High Pressure
5. Useful up to Melting Point of Solid

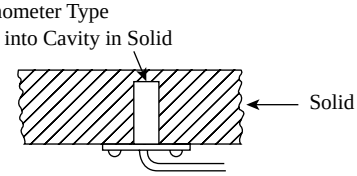

E-Typical Resistance Thermometer Embedded in Solid

Characteristics:
1. Slow Response
2. Inaccurate Knowledge of Location of Temperature Measured

FIG. 4.1w
Some selected methods of installing temperature sensors on or within solids.

© 2003 by Béla Lipták

In a direct wiring scheme, the low-level signals generated by an RTD (Ω) or TC (mV) are particularly susceptible to the signal degrading effects of RFI/EMI. Compounding the problem, sensor extension wires can behave much like an RFI/EMI antenna by actually drawing plant noise to the wires, and affecting weak, low-level signals.

Conversely, a properly designed temperature transmitter effectively negates the effects of incoming RFI noise by converting a sensor's low-level signal to a high-level analog signal (typically 4 to 20 mA). This amplified signal is resistant to RFI/EMI and can accurately withstand long distance transmission from the field, through a noisy plant, back to the control room. When specifying a transmitter, always check for RFI/EMI protection. If there is no specification given, it is usually because the instrument is not designed to resist noise. It will probably not perform very well in a noisy plant environment. RFI immunity is specified in standard IEC 1000–4–3. A spec of 10 V/m is considered acceptable.

Stop Ground Loops Make sure to choose an isolated transmitter. A transmitter's input/output/power signal isolation protects against signal inaccuracies caused by ground loops. This is important even when using ungrounded TCs because their insulation will eventually break down.

Reduce Hardware and Stocking Costs With direct wiring, it is necessary to match the sensor type to input-specific DCS and PLC input cards. Sensor input-specific cards usually cost a lot more per point than a 4- to 20-mA input card. And since numerous sensor types are routinely used in a plant, a large number of different cards must be ordered and kept on hand as spares. This is not only expensive, but can result in a lot of confusion when installing, maintaining, and replacing equipment. Temperature transmitters incorporate powerful microprocessors that allow them to be easily configured to accommodate nearly any sensor input type. Their 4- to 20-mA output signal is control-system ready. This allows standardization and stocking of less expensive 4- to 20-mA DCS and PLC input cards.

Match the Best Sensor to the Application In an intelligent temperature transmitter strategy, the user can simply change out the sensor and reconfigure the transmitter to accommodate the different sensor type. The loop's twisted pair wiring and existing 4- to 20-mA input boards do not even have to be touched. Because it is difficult to predict what sensor you will end up with as process changes are made over the years, make sure to select a universal transmitter that configures to accept all common temperature sensor types and temperature ranges.

Enhance Accuracy and Stability Using temperature transmitters can substantially enhance measurement accuracy. DCS and PLC systems measure readings over the entire (very wide) range of a sensor. Measuring a narrower range produces far more accurate measurements. Transmitters can be calibrated to any range within a sensor's overall capabilities. Their measurements are more precise than is possible with most direct wiring strategies. Better transmitters deliver accuracy ratings of ±0.23°F (±0.13°C) when paired with a common Platinum 100 RTD sensor over a 200°F (111°C) span.

If better accuracy is required, transmitters can be trimmed to precisely match a particular sensor. Even though sensors are designed to have a high degree of conformance to an established curve, each one (even precision sensors) will vary to some degree from their stated specification. Transmitters without matching capability assume that the sensor matches its published curve. To properly determine the measurement accuracy, the actual sensor offset error must be combined with the transmitter error.

Simplify Engineering and Prevent Miswiring In place of numerous sensor lead-wire and DCS/PLC input board combinations, engineering designs and drawings will only need to show one wire type (twisted wire pair) and one input board type (4 to 20 mA). This one wire and one input board system means maintenance is greatly simplified, and the chances of loop miswiring are virtually eliminated.

Ease Future Upgrades Throughout the lifetime of a process, enhancements are routinely made to accommodate the manufacture of upgraded or even completely new products. Process changes may require different measurement ranges or greater temperature accuracy than was previously required. Either of these conditions may necessitate a change in the type of sensors that are used.

In a direct wired system, changing sensors generally means removing existing extension wire and pulling new wire. This is because extension wire must be matched to the sensor type. Additional costs are incurred when the control system's costly input boards (if also sensor-type dependent) must be replaced to accommodate the new sensors.

Lower Maintenance Time and Expense Temperature transmitters have come a long way since the days of fixed-range, inflexible instruments. High quality transmitters are not only universal in regards to input type and range, they also incorporate powerful sensor diagnostics that save considerable time and money.

Temperature transmitters with intelligent diagnostic capabilities continuously monitor sensor operation and quickly find and diagnose sensor failures. If a wire breaks or otherwise stops sending a signal during operation, the transmitter sends the output upscale or downscale to warn of sensor burnout or other unwanted conditions. Furthermore, these transmitters can tell you which wire has broken via an error message on an integral digital display, using their PC configuration software, or via HART diagnostics. Specific fault messages eliminate the work of removing the sensor or checking all of the lead wires to diagnose a problem. During start-ups, in the middle of the night or in the middle of winter, this can be a huge timesaving advantage.

© 2003 by Béla Lipták

Avoid Lead Wire Imbalances Where feasible, use 4-wire RTDs, and specify a temperature transmitter that is able to accept a true 4-wire RTD input. The advantage is that the fourth wire in an RTD circuit effectively cancels out errors due to resistance imbalances between the leads. Every ohm of imbalance in an RTD sensor's lead wires can produce as much as a 4.7°F (2.6°C) error in the measurement. Serious imbalances may be present from the very first day of commissioning without the user even being aware of them. Typical causes include manufacturing variances, lead length differences, loose connections, terminal block corrosion, and work hardening from bending and other stresses.

Intelligent temperature transmitters are capable of accepting true 4-wire RTD inputs and provide a constant current source to the outer leads of the RTD. The voltage drop is measured across the inner leads, which is a high impedance loop. There is essentially no current flow in the voltage loop, so voltage is directly proportional to resistance. Lead resistance is ignored. You will get a very accurate measurement providing the resistance value of the RTD plus corrosion, plus wire resistance, is less than 4000 Ω (typically). A 4-wire RTD costs about the same as a 3-wire and can be used with less expensive, smaller gauge wire without concern for added resistance.

Calibration/Certification

For many applications, using an off-the-shelf sensor with a receiving device will provide adequate measurement accuracy. The offset of the sensor from ideal published relationships may be within the acceptable variation. However, the higher the accuracy required, the more important factors like drift, sensor interchangeability, and system repeatability become.

For critical temperatures, there is often a requirement for certifying that a temperature system produces a given accuracy. In some cases, this is a plant standard and in other cases, accuracy must be traced back to NIST. Whatever the requirement, the calibration must be done as a system that includes the sensor and its measuring device. The key point to understand is that the instrument assumes that the sensor matches published relationships of temperature vs. output. If the sensor is offset from this relationship due to manufacturing tolerances or drift, then the measurement will have an error. The only way to have a true calibration is to bring the sensor to a known temperature and then verify that the instrument output agrees with that value. For field-mounted sensors connected to an I/O system in a remote control room, this is quite difficult to achieve, and errors may have to be tolerated or other methods utilized. One alternative is inserting a certified measuring device adjacent to the installed sensor and adjusting the output trim of the instrument to obtain the correct output reading. For integral sensor/transmitter systems, using a calibration bath or a precision oven offer a solution. How often a calibration is required depends on how closely a system can be verified vs. the accuracy required. For example, a TC system with an accuracy requirement of ±5° can be calibrated to about ±2°, but will have an expected drift of 1 to 5°/year. Hence calibration would have to be performed two or three times/year to calibrate out the drift. However, a premium RTD that has been matched to a transmitter using a calibration bath and capture techniques can offer an accuracy of ±0.02°F and a drift expectation of about ±0.08°F/year. If the system accuracy required were only 0.5°F, a calibration every few years would be adequate to ensure this performance.

The insight to be gained is that a proper choice of components and initial calibration may save significantly on calibration labor and potential process downtime. A wise design engineer will consider the cost of ownership, not just the cost of purchase. Should NIST calibration certification be required, there are many vendors and calibration services that can perform the calibration and provide certificates of traceability to NIST. Calibration on a 12-month interval is suggested by NIST guidelines.

Agency Approvals for Hazardous Areas

When electronic devices are mounted in an area that is, or may be, exposed to explosive vapors, very strict rules apply. Almost every plant in every country with these hazardous environments follows specific guidelines as directed by their insurance coverage. Most often, the guidelines are from one of the recognized certification agencies with jurisdiction in the country. These include FM and UL in the Untied States; CSA in Canada; CENELEC, LCIE, ISSeP, and ATEX in Europe; SAA in Australia; and NEPSI in China. Each of these agencies tests equipment submitted by a manufacturer and certifies it for use in specific area classifications and specifies the associated installation details. It is the design engineer's responsibility to determine the appropriate area classification and then select equipment that has the required approvals.

Protection of field devices from moisture, dust, and corrosive contamination is yet another consideration. Solutions include watertight enclosures, powder coat painted surfaces, air-purged enclosures, and special materials of construction.

Proper wiring, grounding, and installation practices are critically important for a problem-free installation. Basic considerations include separating signal and power wiring into different conduit runs and using twisted shielded wire pairs with the shield grounded at only one end. In addition, proper drip loops and conduit seals should also be provided for field instruments, which should be using lagged thermal wells and proper insulation to protect transmitters from the heat radiated from hot pipes or vessels. Lastly, close-coupling sensors with transmitters and properly sized, fused, and surge-protected power supplies should be used.

Safety-Related Applications

For safety-related applications, functional safety is another concern. Safety standards such as the American National Standards Institute/Instrumentation, Systems, and Automation

© 2003 by Béla Lipták

Society 84.01, IEC 61508, and IEC 61511 offer guidance for maximizing reliability and availability of devices used in safety related applications. The higher the Safety Integrity Level (SIL) required, the higher the availability of the devices in the loop must be to perform their designated task. To prevent nuisance failure situations, consideration is given to the reliability of the devices.

To verify that an instrument loop meets specific SILs, reliability data on all of the loop devices must be used in verification equations as suggested by the standards. Leading transmitter manufacturers offer these data in the form of Failure Modes, Effects, and Diagnostic Analysis reports. Failure probability data from these reports are used in the equations to verify that the loop components selected provide the required SIL. High reliability instruments do not necessarily demand a premium price. It seems a wise choice to standardize within a plant on products that offer documented reliability data from recognized third-party agencies for all applications, not just those that are safety related. It is clear that higher reliability requires less maintenance and produces less downtime of the process.

References

1. Lipták, B.G., "Overview of Coal Conversion Process Instrumentation," Argonne National Laboratory Publication ANL-FE-49628-TM01, May 1980.
2. Stimson, H.F., "International Practical Temperature Scale of 1948, Text Revision of 1960," NBS Monograph 37, 1961.
3. NBS Special Publication 300, Vol. II, January 1969.
4. Giedt, W.H., *Principles of Engineering Heat Transfer*, New York: Van Nostrand, 1957.
5. Carslow, H.S. and Jaeger, J.C., *Conduction of Heat in Solids*, London: Oxford, 1947.
6. Rall, D.L. and Hornbaker, D.R., "A Rational Approach to the Definition of a Meaningful Response Time for Surface Temperature Transfer," 21st Annual Instrumentation, Systems, and Automation Society Conference, New York, October 22–27, 1966.
7. Editor, "Universal Sensor Saves Time and Money," *Canadian Process Equipment and Control News*, April 2001.
8. Miller & Weber, Inc., Ridgewood, NY, www.millerweber.com,
9. Omega Engineering, Stamford, CT, www.omega.com/temperature/Z/pdf/z013–015.pdf.
10. Omega Engineering, Stamford, CT, www.omega.com/temperature/Z/zsection.asp.
11. Moore Industries, North Hills, CA, www.miinet.com.
12. Thermocouple Technical Reference Data, ISE Inc., Cleveland, OH, instserv.com/orphn/rmocoupl.htm.
13. Davis Inotek Instruments, www.inotek.com/Catalog/pyromation1th.html.
14. Thin Film RTD Temperature Sensors: Series 300, Burns Engineering, Minnetonka, MN, www.burnsengineering.com/product/p3.htm.
15. Thermocouple Table Downloads, Temperatures.com, Brecksville, OH, www.temperatures.com/tctables.html.
16. Thermo Electric Co., Inc., Saddle Brook, NJ, www.thermo-electric-direct.com/thermo/id10.html.
17. Wika Instrument Corporation, Lawrenceville, GA, www.wika.com/B00.html.
18. Omega Engineering, Stamford, CT, www.omega.com/pdf/temperature/Z/pdf/z086.pdf.
19. Omega Engineering, Stamford, CT, www.omega.com/pdf/temperature/Z/pdf/z088–089.pdf.
20. Omega Engineering, Stamford, CT, www.omega.com/pdf/temperature/Z/pdf/z067–069.pdf.
21. PETA Solutions, U.K., www.thermal-instruments.com/.
22. Hart Communication Foundation, Austin, TX, www.hartcomm.org/.
23. Schneider Electric, Palatine, IL, www.modicon.com/Default.htm.
24. Madden, J.R., "Sensor-to-Transmitter Trimming Offers Precise Temperature Calibration," *Control Engineering Magazine*, October 2001.
25. ThermoSync Temperature Management System, PGI International, Houston, TX, www.pgiint.com/thermosync/.

Bibliography

Ackland, K., Selecting the right infrared temperature sensor, *InTech*, June 1998.

Adler, C.B., "Reliability Aspects of Temperature Measurement," Instrumentation, Systems, and Automation Society Conference, Chicago, 2001.

Bediones, D. and Wang, T.P., "Criteria for the Selection of Thermocouples Versus RTD's in Industrial Applications," Paper #91–0300, Instrumentation, Systems, and Automation Society, Toronto, 1991.

Bidini, G., "A Method for the Thermo-Fluid Dynamic Design of Gas Turbine Total Temperature Probes," Paper #91–0511, Instrumentation, Systems, and Automation Society Conference, Toronto, 1991.

Bliss, P. and Morgan, R.K., "Errors in Temperature Measurement," *Instrumentation Technology*, March 1971.

Bluestein, I., "Understanding Contact Temperature Sensors," *Sensors*, October 2001.

Bonkowski, J., "Infrared Thermometry," *Measurements and Control*, February 1984.

Carlson, D.R., "Temperature Measurement in Process Control," *InTech*, October 1990.

Carlson D.R., "Transmitting a Remote Temperature," *Control*, April 1989.

Desmarais, R. and Breuer, J., "How to Select and Use the Right Temperature Sensor," *Sensors*, January 2001.

Hage, J., "Smart Temperature Transmitter Accents Accuracy," *Control*, September 1999.

Hall, J., "Applying Temperature Sensors," *Instruments and Control Systems*, June 1980.

Hashemian, H.M. and Peterson, K.M., "Assuring Accurate Temperature Measurement," *InTech*, October 1989.

Hormuth, G.A., "Ways to Measure Temperature," *Control Engineering*, Reprint No. 948, 1971.

Instrumentation, Systems, and Automation Society Standards, Mc96, Temperature Measurement, TC Research Triangle Park, NC, 1982.

Instrumentation, Systems, and Automation Society Standards, SP 1.5, Noncontacting Temperature Measurement Devices, Research Triangle Park, NC.

Jutila, J.M., "Temperature Instrumentation," *Instrumentation Technology*, February 1980.

Kreider, K., "Thermocouple Research at NIST," Paper #91–0301, Instrument Society of America Conference, Toronto, 1991.

Krigman, A., "Temperature Instrumentation: Recent Patent Activity," *InTech*, August 1983.

Langan, P.E. and Ironside, D.S., "Calibration Ensures Accurate Temperature Measurement," *InTech*, October 1989.

Lear, R., "A Review of Cryogenic Temperature Sensors," Instrument Society of America Conference, Houston, TX, October 1992.

Leewis, W., "The International Temperature Scale of 1990," Paper #91–0302, Instrument Instrumentation, Systems, and Automation Society Conference, 1991.

Lipták, B.G., "Overview of Coal Conversion Process Instrumentation," Argonne National Laboratories Publication ANL-FE-49628-TM01, Argonne, IL, 1969.

Magison, E., "Selecting the Right Temperature Sensor," *InTech*, February 1993.

Magison, E., Temperature measurement, *InTech*, October 25, 2001.

© 2003 by Béla Lipták

Peacock, G.R., "Radiation Thermometry: Temperature Measurement without Contact," Paper #91–0305, Instrumentation, Systems, and Automation Society Conference, Toronto, 1991.

Peterson, W., "Choosing the Right Temperature Transmitter," *InTech*, April 1991.

Plumb, H.H., "Temperature: Its Measure and Control in Science and Industry," 5th Symposium on Temperature, National Bureau of Standards, American Institute of Physics, Instrumentation, Systems, and Automation Society, Chicago, 1971.

Prentice, G.R., "Seven Reasons Why Temperature Transmitters are Better Than Direct Wiring," *Process Heating*, June 1999.

Schooley, J.F., "State of the Art of the Instrumentation for High Temperature Thermometry," Publication Number ANL-78–7, Argonne National Laboratories Symposium, Argonne, IL, 1977.

Shepard, R.L. et al., "Development of Long Life, High Reliability, Remotely Operated Johnson Noise Thermometer," Paper #91–0306, Instrumentation, Systems, and Automation Society Conference, Toronto, 1991.

Stockham, R., "Temperature Transmitters Take the Lead Over Direct Wiring," *Control and Instrumentation*, 1999 Product Survey Directory.

Volbrecht, A. and Gordon, W., "Temperature Measurement: Making Sense of it All," *Sensors*, June 1998.

© 2003 by Béla Lipták

4.2 Bimetallic Thermometers

T. J. CLAGGETT, R. W. WORRALL (1969, 1982) **B. G. LIPTÁK** (1995)
S. EDVI, J. E. JAMISON (2003)

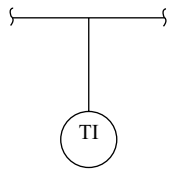

Flow Sheet Symbol

Temperature Ranges: Minimum standard span is 150°F (50°C); maximum standard span is 800°F (450°C). Standard ranges in approximately 15 steps are available from –100 to 125°F (–70 to 50°C) up to 200 to 1000°F (100 to 550°C). According to DIN 16203, the heating, ventilation, and air conditioning (HVAC) sector has graduated, indicating ranges from –22 to 392°F (–30 to 200°C).

Materials of Construction: External parts are made of copper alloys, stainless steel, or CrNi steel with acrylic or industrial sheet glass view windows. The thermowells can be brass, steel, stainless steel, or other special-order materials.

Dimensions: Dial diameters vary from 1 to 6.5 in. (25 to 165 mm); stem lengths vary from 2.5 to 36 in. (63 to 914 mm).

Costs: A 3 in. diameter, back-connected unit with a 2.5 in. brass thermowell lists at $60; a 5 in. diameter, multiangle unit with a 6 in. stainless steel thermowell is $65. Thermometers are usually discounted from 10 to 45% when large quantities are purchased.

Partial List of Suppliers:
ABB Kent-Taylor (www.abb.com)
Abbeon Cal Inc. (Strap-on) (www.abbeon.com)
AMETEK Inc. U.S. Gauge Div. (www.ametekusg.com)
Anderson Instrument Co. (www.andersoninstrumentco.com)
Ashcroft-Heise Div. of Dresser Industries (www.dresserinstruments.com)
Bacharach Inc. (www.bacharach-inc.com)
Bristol Babcock Co. Helicoid Div. (www.bristolbabcock.com)
Brooklyn Thermometer Co. Inc. (www.brooklynthermometer.com)
Cooper Instrument Corp. (www.cooperinstrument.com)
Crosby Inc.
Dresser Industries, Instrument Div. (www.dresser.com/instruments)
Duro United Instrument Corp. (www.fluidproducts.com)
Fenwal Controls Inc. (www.fenwalcontrols.com)
FW Murphy (www.fwmurphy.com)
Griffith Industrial Products (www.versagauge.com)
Jumo Process Control Inc. (www.jumoprocesscontrol.com)
Marshall Instruments Inc. (www.marshbellofram.com)
Marshalltown Instruments Inc. (www.marshbellofram.com)
Marsh Instrument Co. (www.marshbellofram.com)
Mercoid Div. of Dwyer Instruments Ltd. (www.dwyerinstruments.com)
Moeller Instrument Co. (www.moellerinstrument.com)
Noshok Inc. (www.noshok.com)
Omega Engineering Inc. (www.omega.com)
Pacific Transducer Corp. (Surface) (www.ptc1.com)
Palmer Instruments Inc. (www.palmerinstruments.com)
Princo Instruments Inc. (www.princoinstruments.com)
PSG Industries Inc. (www.psgcontrols.com)
Qualitrol Corp. (www.qualitrolcorp.com)
Reotemp Instrument Corp. (www.reotemp.com)
Stortz, Div. of PSG Industries Inc.
Taylor Thermometer Corp. of America (www.metroscales.com)

© 2003 by Béla Lipták

Tel-Tru Mfg. Co. (www.teltru.com)
Trend Instruments Inc. (www.trendinst.com)
H.O. Trerice (www.hotrerice.com)
Universal Enterprises (www.ueitest.com)
Weiss Instruments Inc. (www.weissinstruments.com)
Weksler Instruments Corp. (www.dresserinstruments.com)
Wika Instrument Corp. (www.wika.com)

BIMETALLIC SPRINGS

Bimetallic thermometers make use of two fundamental principles: (1) metals change volume with temperature, and (2) this coefficient of change is not the same for all metals (see Figure 4.2a). If two different straight metal strips are bonded together and heated, the resultant strip will bend toward the side of the metal with the lower expansion rate. Deflection is proportional to the square of the length and the temperature change and inversely proportional to the thickness. A bimetallic spring (Figure 4.2b) can be calibrated to produce a predictable deflection at a preset temperature. This is the basis of operation of the many bimetallic temperature switches in household appliances.

The motion produced by a bimetallic spring is small; to amplify it in a reasonably sized space the bimetal strip may be wound in the form of a spiral or a helix. A classic example of an ambient air temperature thermometer is shown in Figure 4.2c. The outside edge of the spiral is pinned to the frame and a pointer is connected to the center. As the temperature increases, the spiral winds up deflecting the pointer clockwise.

Knowing the coefficients of expansion of the two metals, their thickness, and the desired scale length and range, the total length of the spiral can be computed. A favorite combination of metals is low-expanding Invar (64% Fe, 36% Ni) against high-expanding nickel-iron alloy with chromium or manganese added.

Thermometers

Most industrial or residential bimetal thermometers use a helical coil which can be designed to fit into a stem more easily than the spiral. The element is surrounded by a protecting tube or thermowell (see Section 4.14). The device can be mounted to measure the temperature of the gas or liquid inside a duct. The design is frequently used on domestic furnaces and over the years has replaced most of the glass stem thermometers used earlier. Figure 4.2d illustrates a typical bimetallic thermometer using a helical coil. Also shown is a protective thermowell, which allows the removal or replacement of the thermometer without opening up the process tank or piping. When only periodic checks are needed on a particular temperature point, a thermowell only is installed and is protected from dirt accumulation by a cap.

A single helix moves axially as it winds or unwinds with heat and cold. This requires clearance for a vertical movement of the pointer. The difficulty can be overcome, if desired, by using a multiple element, wound coaxially so as to form coils within coils. This construction is more costly but has an advantage in requiring less immersion depth (Figure 4.2e).

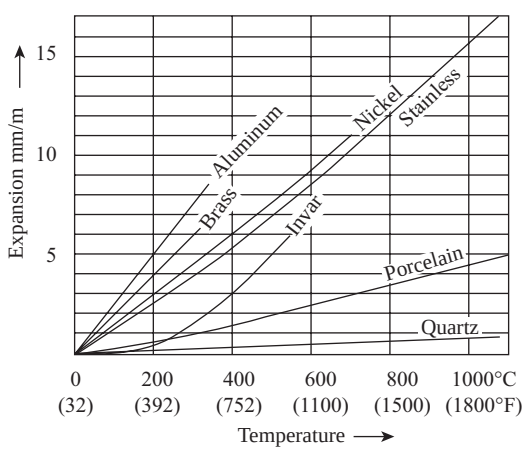

FIG. 4.2a
Thermal expansion of materials for stem-type expansion thermometers. (Courtesy of WIKA Instrument Corporation.)

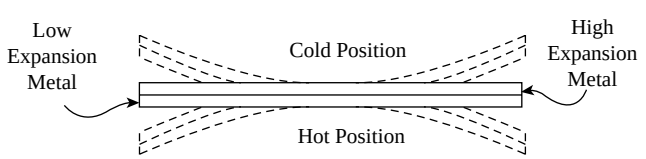

FIG. 4.2b
The operation of a bimetallic spring.

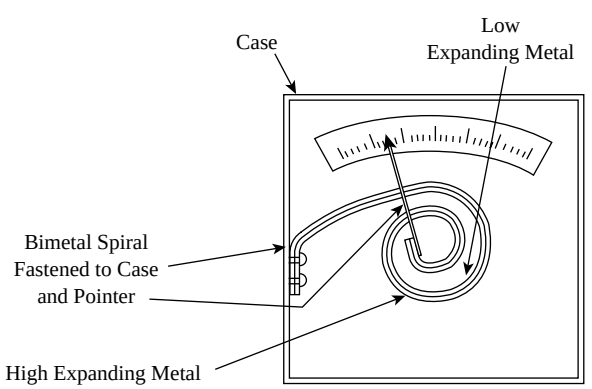

FIG. 4.2c
Bimetallic ambient air thermometer.

© 2003 by Béla Lipták

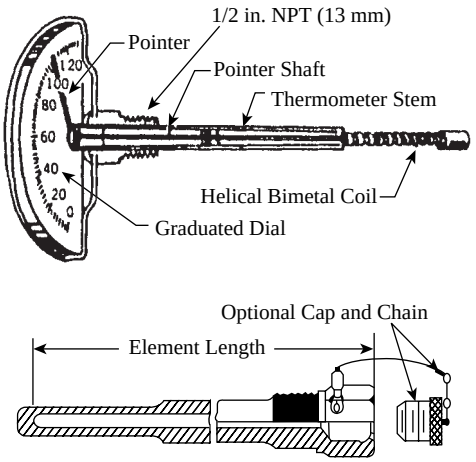

FIG. 4.2d
Bimetallic thermometer and corresponding thermowell.

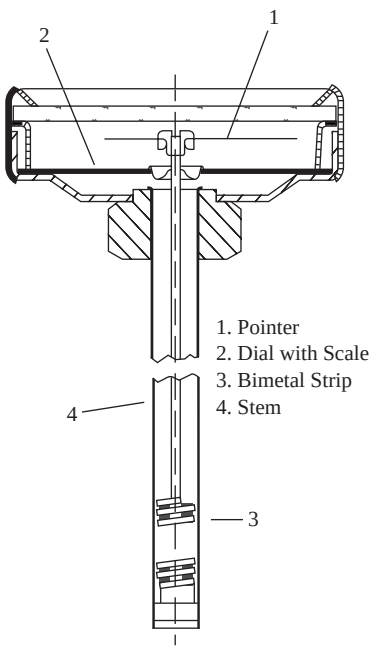

FIG. 4.2e
Bimetal thermometer with dual helical bimetal coil. (Courtesy of WIKA Instrument Corporation.)

Dial Orientation and Size

The thermometer is usually either back- or bottom-connected, depending on which orientation allows the operator better visibility of the dial face. Bimetal thermometers are also made in types that can adjust the dial face at any angle, with respect to the axis of the stem. This can even be a swivel type as shown on Figure 4.2f. Any of these constructions requires a bend in the motion transmission from coil to pointer. This is done with an edge-wound helical spring, which eliminates

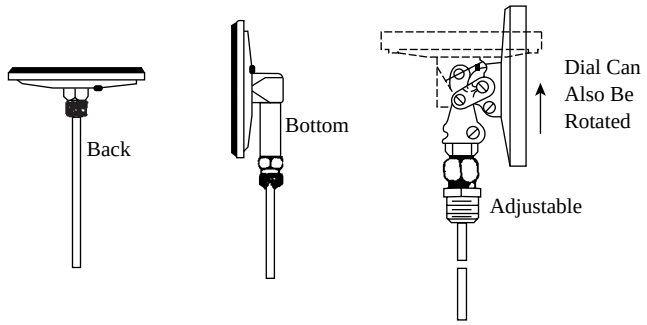

FIG. 4.2f
The bimetallic thermometers can be back- or bottom-connected, or they can be fully adjustable. (Courtesy of Taylor Thermometer Corp. of America.)

backlash and requires little torque to operate. Another type available is the Pocket Thermometer.

Another feature usually included is complete sealing. A dry gas is in the dial face portion of the assembly while silicone fluid fills the stem and surrounds the coil to dampen vibration and accelerate heat transfer.

Readout dials are available varying from 1 to 6.5 in. (25 to 165 mm) in diameter and with stem lengths up to 36 in. (914 mm). Wells made of carbon steel, stainless steel, or other materials are available to facilitate removal or to protect against corrosive environments.

Bimetallic elements can be made sufficiently sturdy to actuate a recording pen. A chart, driven by mechanical clockwork behind the pen, can form a complete measuring and recording system that is independent of outside electric power.

Advantages and Disadvantages

The advantages over glass stem thermometers include that the bimetallic design is less likely to break and is easier to read. Relative to the filled or electronic temperature indicators, the main advantages of bimetallic thermometers are their lower cost and simplicity.

Disadvantages include that the calibration of bimetallic thermometers can change due to rough handling and that the overall accuracy is not as good as that of the glass stem design. The bimetallic thermometers are generally confined to local measurement.

Bibliography

Adler, C.B., "Reliability Aspects of Temperature Measurement," Instrumentation, Systems, and Automation Society Conference, Chicago, 2001.

von Beckerath, A., Eberlein, A., Julien, H., Kerstein, P., and Kreutzer, J., *WIKA Handbook on Pressure and Temperature Measurement*, U.S. ed., Lawrenceville, GA: Wika Instrument Corp., 1998.

"Bimetallic Thermometers," *Measurements and Control*, October 1991.

Bluestein, I., "Understanding Contact Temperature Sensors," *Sensors*, October 2001.

© 2003 by Béla Lipták

Carlson, D.R., "Temperature Measurement in Process Control," *InTech*, October 1990.

Hashemian, H.M. and Peterson, K.M., "Assuring Accurate Temperature Measurement," *InTech*, October 1989.

Hormuth, G.A., "Ways to Measure Temperature," *Control Engineering*, Reprint No. 948, 1971.

Magison, E., "Temperature Measurement," *InTech*, November 2001.

Plumb, H.H., "Temperature: Its Measure and Control in Science and Industry," Vol. 4, 5th Symposium on Temperature, National Bureau of Standards, American Institute of Physics, Instrumentation, Systems, and Automation Society, Pittsburgh, PA, 1972.

Schupp, A.B., "A Report on Progress in the Field of Bimetallic Actuated Thermometers," *Measurement and Control News*, October 1990.

© 2003 by Béla Lipták

4.3 Calibrators and Simulators

H. L. DANEMAN (1995) **S. EDVI, J. E. JAMISON** (2003)

Types of Designs: A. Calibrators that use simulators (devices that simulate the output signal of thermometers). B. Calibrators that use calibration baths, which provide accurate temperature environments for calibration purposes (systems use hot air, oil, sand, or aluminum blocks for heat storage; some are fluidized beds).

Costs: Simple resistance temperature detector or thermocouple simulator costs start at about $200. A handheld thermocouple simulator with 10 memory locations and 0.1% inaccuracy is about $700; a resistance temperature detector simulator with 6 decades and 0.005% inaccuracy is about $2500; a 4- to 20-mA DC transmitter calibrator with simulation of 11 resistance temperature detectors and 8 thermocouples is about $6000. Calibration bath costs vary with bath volume, heat storage media, and calibration accuracy. A microprocessor-controlled, programmable bath with IEEE 488 and RS232C interface and 0.002°C stability is about $12,500; other baths range from $3000 to $25,000.

Partial List of Suppliers:

Altek Industries Corp. Div. of Transmation Products Group (A) (www.altekcalibrators.com)
Ametek/Jofra Instruments (B) (www.ametek.com)
Automation Service, Test Equipment Div. (B—hot air) (www.automationservice.com)
Azonix Co. (www.azonix.com)
Beta Products Div. of Hathaway Process Instrumentation Corp. (A) (www.betacalibrators.com)
Biddle Instruments (A) (www.avointl.com)
Chino Works Div. Chino Corp. (www.chinoamerica.com)
Elan Technical Corp. (A) (www.elantechnical.com)
Cole-Parmer (B—fluidized bed) (www.coleparmer.com)
Davis Instrument Mfg. Co. (B) (www.davisontheweb.com)
Druck Inc. (www.druck.com)
Ever Ready Thermometer Co. Div. of Apogent Technologies Company (www.ertco.com)
Fluke (www.fluke.com)
Forma Scientific Co. Div. of Thermo Electron. (B) (www.thermo.com)
FTS Kinetics Inc. (B) (www.kineticsgroup.com)
Hart Scientific Inc. (A, B) (www.hartscientific.com)
Hotpack Corp. (B) (www.hotpack.com)
Isothermal Technology Ltd. (B) (www.isotech.co.uk)
GE Kaye Instruments Div. of GE Industrial Systems (www.kayeinstruments.com)
Love Controls Co. Div. of Dwyer Instruments (A) (www.love-controls.com)
Mikron Instrument Co. (A) (www.mikroninst.com)
Neslab Instruments Inc. Div. of Thermo Electron. (B) (www.thermo.com)
Omega Engineering Co. (www.omega.com)
Onicon Inc. (A) (www.onicon.com)
Panalarm Div. Ametek Inc. (A) (www.panalarm.com)
Prime Technology Inc. (A) (www.primetechnology.com)
Procedyne Corp. (B) (www.procedyne.com)
Promac Inc. Div. of Hathaway Process Instrumentation Corp. (A) (www.hathawayprocess.com)
Rochester Instrument Systems Inc. Div. of Ametek (A) (www.annuciatorstore.com)
Rosemount Inc. Div. of Emerson Electric Company (B) (www.rosemount.com)

© 2003 by Béla Lipták

Science/Electronics Inc. (B) (www.se-one.com)
S-Products Inc. (A) (www.s-products.com)
Techne Inc. (A) (www.techeusa.com)
Tenney Environmental Div. of Lunaire LTD. (B) (www.lunaire.com)
Thermo Electric Co. Inc. (A) (www.thermoelectric.com)
Yokogawa Corp. of America (A) (www.yokogawa.com)

Temperature calibrators range from simple hand-held instruments to large permanently installed baths, chambers, and water-proof test cases. Calibrators reproduce temperatures with an accuracy and stability adequate for the range of devices to be checked. The thermometers are normally calibrated at one specific temperature at a time, although a series of baths can be assembled for sequential immersion to enable a range of temperature points to be checked. Correspondingly, the temperature can be reset in stages or as a ramp function for multipoint checking.

Simulators duplicate the outputs of temperature sensors, enabling measuring instruments to see a simulated but precise temperature value. This output may be a millivoltage to simulate thermocouples (TCs), a resistance to simulate resistance temperature detectors (RTDs), or a light or radiant energy level to calibrate instruments based on optical or infrared (IR) energy. Simulators can usually be connected locally (at the sensor) and then at the readout instrument so as to check the operation of transmitters, multiplexers, and cabling.

A fixed resistor connected to a multipoint monitor is an example of a simulator that continuously checks the calibration of indicators, recorders, and alarms. Some calibrators incorporate both temperature environment and sensor output functions.

TEMPERATURE CALIBRATION BATHS

A bath or chamber creates a temperature environment suitable for the immersion of temperature sensors such as TCs, RTDs, or bulbs. There are two bath types: fixed and adjustable. The earliest fixed-temperature calibrator used was the ice bath. This was supplemented by other so-called fixed calibration points, such as the steam and sulfur points, and later by a full range of freezing, boiling, and triple points (see Table 4.1e). These are based on the principle that materials change state (freeze and boil) at certain fixed temperatures (Table 4.3a). Many of these points have become reference values for defining the temperature scale and are therefore especially appropriate for calibration.

Useful examples of such fixed points are the triple point of water (0.0100°C) and the freezing point of zinc (419.53°C). The triple point of water is obtained in a sealed container in which the solid, liquid, and vapor states of water are in equilibrium (Figure 4.3b). In contrast to the triple point, the ice point can be more easily obtained and used to an accuracy suitable for industrial calibration. RTDs in particular are defined in terms of their R_0 value, or resistance value at the ice point (e.g., 100 Ω Pt.). Immersion in an ice point bath is a useful way of compensating for calibrating drift even though the thermometer is normally used at higher temperatures.

Adjustable temperature baths contain a fluid (liquid or fluidized solid) circulated through a chamber in which the thermometers can be immersed. Controllers maintain a temperature at the desired set point. A block establishes temperature uniformity among sensors at temperatures below 1472°F (800°C), or where conduction is the primary means of heat transfer.

TABLE 4.3a
Defining Fixed Points of the International Practical Temperature Scale (ITS-90)

Point Number	Temperature T_{90}/°K	Temperature t_{90}/°C	Substance	State
1	3 to 5	–270.15 to –268.15	He	VP
2	13.8	–259.35	eq. H_2	TP
3	≈17	≈–256.15	eq. H_2 (or He)	VP (or GT)
4	≈20.3	≈–252.85	eq. H_2 (or He)	VP (or GT)
5	24.6	–248.6	Ne	TP
6	54.36	–218.8	O_2	TP
7	83.8	–189.34	Ar	TP
8	234.32	–38.83	Hg	TP
9	273.16	0.01	H_2O	TP
10	302.92	29.77	Ga	MP
11	429.75	156.60	In	FP
12	505.08	231.93	Sn	FP
13	692.68	419.53	Zn	FP
14	933.47	660.32	Al	FP
15	1234.93	961.78	Ag	FP
16	1337.33	1064.18	Au	FP
17	1357.77	1084.62	Cu	FP

FP = freezing point
MP = melting point
GT = gas thermometer point
TP = triple point
VP = vapor pressure point
eq. H_2 = hydrogen at the equilibrium concentration of the ortho- and para-molecular forms

© 2003 by Béla Lipták

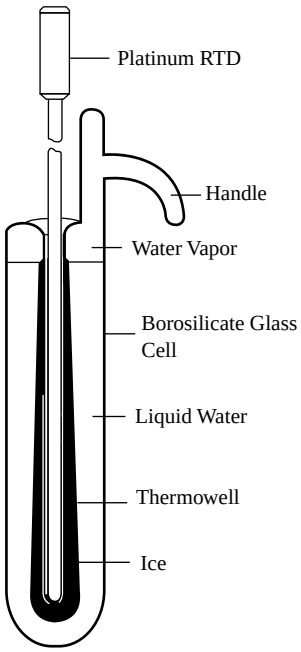

FIG. 4.3b
Sealed container used to obtain the triple-point temperature of water used in the calibration of RTDs.

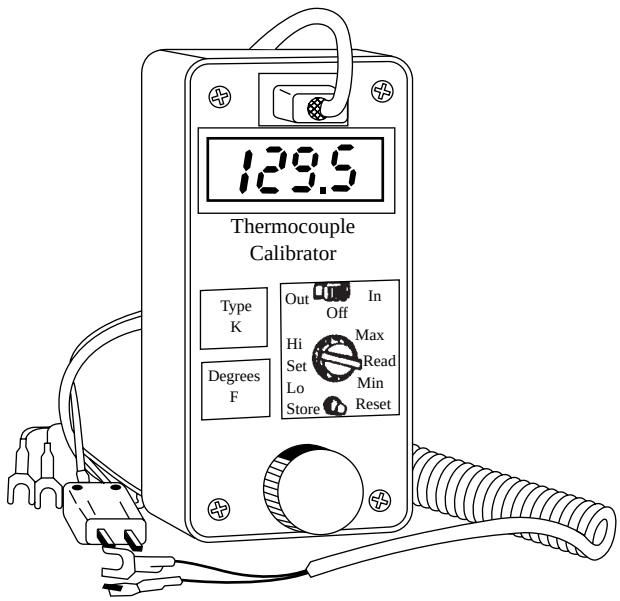

FIG. 4.3c
Handheld thermocouple calibrator. (Courtesy of Altek Industries Corp.)

SIMULATORS

Simulators for TCs and RTDs consist of voltage sources and/or resistors having values that correspond to the required temperature readings. TC simulators require provision for reference junction compensation and alloy terminals.

Simulators for optical or total radiation pyrometer calibration may be as simple as a 25-watt lamp or as sophisticated as a controlled output arc furnace. It is usual to use these simulators with comparison standards. By comparing one optical pyrometer with a standard or with a laboratory-calibrated optical pyrometer, one can avoid errors that may arise due to their large ambient temperature coefficients. Such calibrations can, for example, be performed in an outdoor shed or pyrometer shop adjacent to a steel mill.

A typical handheld calibrator is illustrated in Figure 4.3c. A laboratory-type thermocouple calibrator/simulator is shown in Figure 4.3d. This unit combines both the simulation and calibration functions in one unit.

A simulator for optical pyrometry is shown in Figure 4.3e. The unit incorporates a copper fixed point to provide a reference temperature 1985°F (1085°C) independent of a standards laboratory. A very high temperature 3002°F (1650°C) TC and optical/radiation pyrometer calibration system incorporating a palladium freezing point, molybdenum block, and standard lamp was built for a steel mill in Brazil where traceability to a national laboratory was unavailable.

Field and laboratory temperature calibrations are best performed with calibrators and simulators that are adapted for the particular application.

CONCLUSIONS

Table 4.3f provides some recommendations for the type of calibration equipment that is best suited for particular temperature sensors and industrial or laboratory environments.

Bibliography

Adler, C.B., "Reliability Aspects of Temperature Measurement," Instrumentation, Systems, and Automation Society Conference, 2002.

American Society for Testing and Materials, *Annual Book of ASTM Standards*, Section 14, General Methods and Instrumentation, West Conshohocken, PA, 2003.

"Calibration Technology Goes Digital," *InTech*, September 1989, pp. 86–87.

Daneman, H.L., "The Do's and Don'ts of Temperature Calibration," NCSL Annual Conference Proceedings, June 1991.

Daneman, H.L., "The Precise Calibration of Industrial Pyrometers to 1,650°C," Measurement Science Conference, Anaheim, CA, January 1986.

Gray, W.T., "Calibration of Optical Pyrometers," *ISA Transactions*, Vol. 6, 1967.

Hussselbaugh, B., "Temperature Calibration Chamber," *M & C News*, September 1992.

Kaufman, A., "Liquid Cooling of Electronics," *Measurements and Control*, September 1979, pp. 120–121.

Kaufman, A., "Temperature Transducer Calibration Baths," *Measurements and Control*, February 1986, pp. 188–189.

© 2003 by Béla Lipták

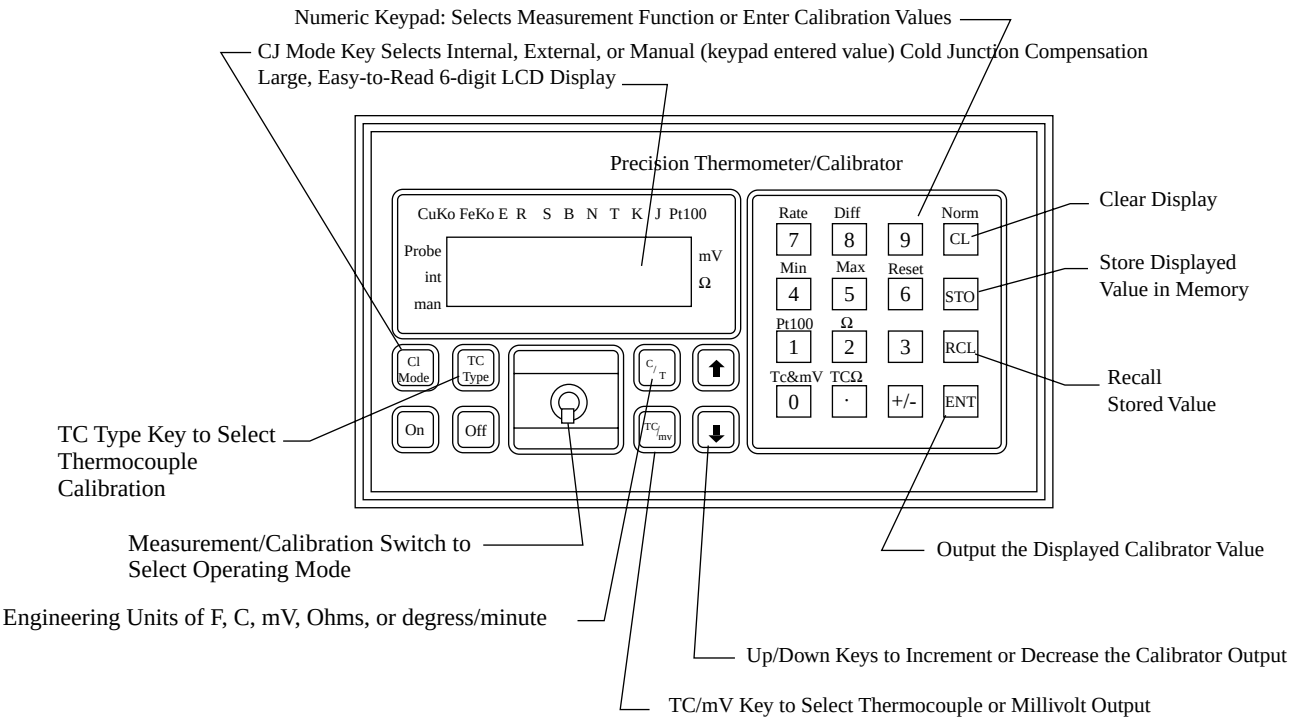

FIG. 4.3d
Thermocouple calibrator/simulator used in the laboratory.

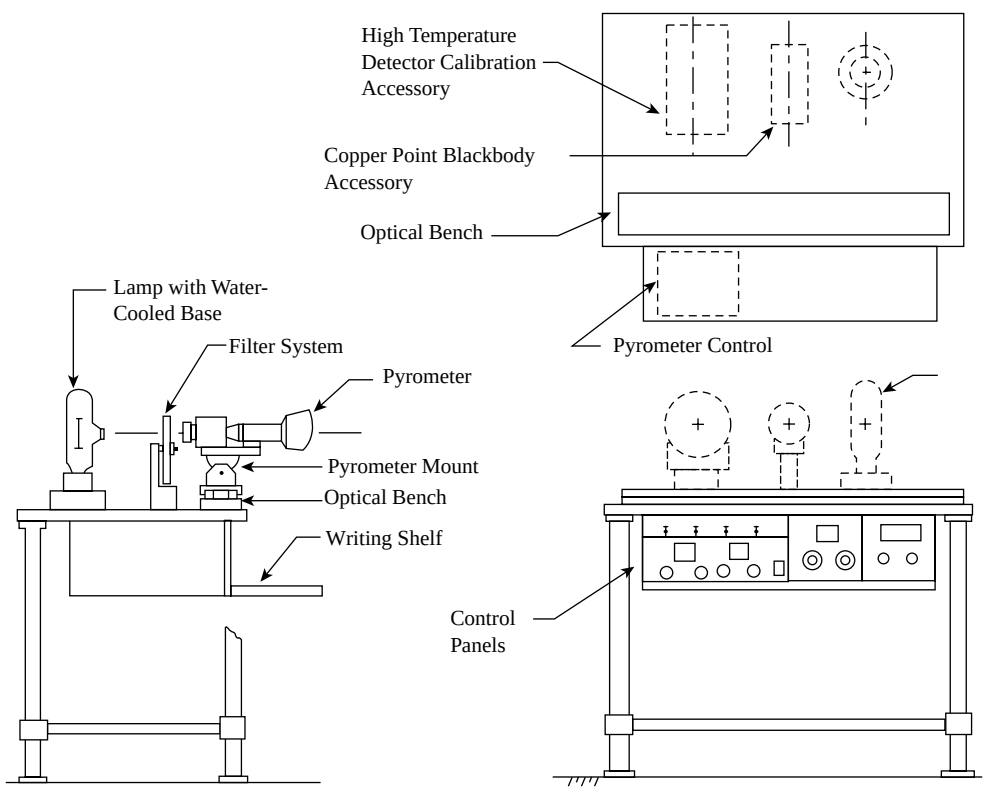

FIG. 4.3e
Two pyrometer calibration system with copper point, blackbody furnace, and standard lamp.

© 2003 by Béla Lipták

TABLE 4.3f
Calibration Equipment Recommended as a Function of the Type of Thermometer and of the Operating Environment

Temperature Sensor Being Calibrated	*Laboratory Environment*	*Industrial Installation*
Thermocouples	Triple point	Automatic ice point
	Metal freezing points	Portable calibrator
	Fluidized bath	Portable simulator
RTDs	Triple point	Portable calibrator
	Freezing points	Portable bath
	Laboratory simulator	Portable simulator
Optical pyrometers	Comparison system	Lamp comparator
Radiation detectors	Comparison system	Optical pyrometer

Kaufman, A. and Drees, W., "How Accurate Are Your Transducer Calibrations?," *Instruments & Control Systems*, November 1959, pp. 1682–1685.

Kaufman, A. and Mitchell, P., "How Accurate Are Your Temperature Reference Baths?," *Instruments & Automation*, March 1955, pp. 450–451.

Kerlin, T.W., *Practical Thermocouple Thermometry,* ISA Press, 1999.

Mangum, B.W. and Furukawa, G.T., "Guidelines for Realizing the International Temperature Scale of 1990 (ITS-90)," NIST Tech. Note 1265, August 1990.

Michalski, L., Eckersdorf, K., and McGhee, J., *Temperature Measurement*, New York: John Wiley & Sons, 1991.

National Bureau of Standards, Thermometer Calibration: A Model for State Calibration Laboratories, NBS Monograph 174.

"Standards, Simulators, Calibrators," *Measurements and Control*, September 1991.

"Temperature Calibration Baths," *Measurements and Control*, September 1991.

Withers, P., "Thermocouple Calibration," *Measurements and Control*, September 1990, pp. 144–147.

© 2003 by Béla Lipták

4.4 Cones, Crayons, Labels, Paints, and Pellets

T. J. CLAGGETT, R. W. WORRALL (1969, 1982) **B. G. LIPTÁK** (1995)
S. EDVI, J. E. JAMISON (2003)

Temperature Settings:	Cones are numbered as in Table 4.4b with each number corresponding to an approximate setting. Crayons and paints are usually rated with a combination of temperature and time, meaning that a color change is expected to occur if a particular temperature is held for a particular time period.
Phase Change Types:	Reversible and nonreversible temperature-indicating labels, strips, and buttons Multi-temperature and Mylar liquid crystal strips and sheets Crayons Pellets Paints or lacquers
Temperature Ranges:	Cones cover a range between 1100 and 3650°F (593 and 2010°C) Reversible liquid crystal strips: range between –20 and 194°F (–30 and 90°C) Nonreversible labels with 4 temperatures on each label: range between 100 and 500°F (38 and 260°C) Reversible liquid crystal Mylar sheets: range between 68 and 113°F (20 and 45°C) Crayons, pellets, and paints: range between 100 and 2500°F (39 and 1371°C)
Costs:	$3 to $6 for a box of 50 cones, $0.50 to $1.50 per plug Reversible liquid crystal strips (seven temperature ranges): package of 10 is $12; package of 30 is $33 Nonreversible labels, monitors, and buttons: package of 10 is $13 to $55; package of 30 is $37 to $55 Reversible liquid crystal Mylar sheets: 12 in. × 12 in. sheets = $22, 6 sheets of 6 in. × 12 in. sheets is $76; 6 sheets, one of each temperature range is $52 Crayons: $9 each to $55 for a 10-crayon set Pellets: $11 per tube of 20 pellets Paints/lacquers: 2 oz bottle is $11, 1 pt is $60; thinners: 2 oz bottle is $4, 1 pt is $13
Applications:	Labels: machinery, equipment, electrical parts, electronic assemblies, aeronautical, heating, ventilation, and air conditioning (HVAC), and appliances Crayons: welding, forging, heat-treating, and accessible work pieces Pellets: furnace temperature Paints: smooth glass, polished metals, rubber, and fabrics
Inaccuracy:	Indication is affected by speed of heat-up and by time spent at target temperature; usual error is about 5°F (3°C) for cones and about 10 to 20°F (5 to 10°C) for crayons, pellets, and paints. The error of most crayons, pellets, and paints is 1% of their rating. Liquid crystal strips can detect skin temperatures within 1°F (0.5°C).
Partial List of Suppliers:	Biosynergy Inc., a Div. of American Clinical Laboratory (ACL) (freeze-thaw indicator) (www.iscpubs.com/pubs/prodhilite) Electronic Development Labs Inc. (EDL) (cones and crayons) (www.edl-inc.com) Orton Ceramic Foundation (cones) (www.ortonceramic.com) Hub Material Co. Inc. (cones and crayons) (www.hubmaterial.com) Korthals (www.korthals.nl)

© 2003 by Béla Lipták

LA-Co/Markal Co. (stick-ons) (www.laco.com)
Omega Engineering, Inc. (crayons, pellets, labels, paints) (www.omega.com)
Tempil, a Div. of Illinois Tool Works Inc. (ITW) (crayons, paints)
(www.tempil.com)

INTRODUCTION

A number of temperature-related physical changes have been used to produce simple thermometers. Crayons, pellets, and paint marks on heated work-pieces, cones, or pellets placed in furnaces change from solid to liquid when their melting point is reached. Paints and heat-sensitive labels change their color, while luminescent materials change their brightness. Liquid cholesteric crystals detect skin temperature, and liquid crystal strips are ideal for motors, transformers, relays, and electronic parts.

For centuries, manually operated furnaces have been temperature-controlled by the operators placing a heat-sensitive object inside the furnace and observing the status of that indicator through a peephole. The most easily observed physical changes were found to be changes in color or melting. Pyrometric cones have been used as temperature indicators and are still used as endpoint indicators in such batch processes as firing in pottery furnaces. They can be small, expendable, plugs, chips, or geometrically shaped objects whose purpose is to accompany the products through a heating cycle. The physical or metallurgical changes that occur indicate the temperature reached in the process.

COLOR INDICATORS

Color indicators are a class of sensors that have the property of changing their original color when a certain temperature is reached. The change is distinct, not just an alteration in shade. For instance, an indicator may change from yellow to gray or from light blue to light brown. Some can go through several color changes at different temperatures.

Paints and Pellets

Paints and pellets are familiar forms of these indicators that are applied directly to a solid object either when it is cold and about to be heated, or when it is already hot. Some indicators can determine the temperature of solid objects immersed in oil. They are not recommended for use in hot gases.

Temperature is indicated by a chemical reaction, where a molecule of a gas such as ammonia, carbon dioxide, or water vapor is driven off the basic stock (colorful salts of metals like nickel, cobalt, or chromium), changing its color. The change is usually permanent after the object cools down. An exception occurs when the gas is water vapor; the indicator may slowly reabsorb this gas from the air and revert to the original color.

Change in color of these types of indicators is not only a function of temperature but also of time. For this reason, the immediate past temperature history of the indicator will influence the exact point at which it will change color. The indicators are usually rated for a specific temperature over a certain time period, for instance, 140°F (60°C) in 30 min. This means that if held at a constant 140°F the color change will occur in 30 min. If the color change occurs in less than 30 min, the average temperature is higher than 140°F, and vice versa. On such an indicator, if the temperature does not exceed 130°F (54°C), the change will never occur because the indicator is stable below this temperature.

Crayons

Figure 4.4a shows typical time-temperature relationships for two different crayons. In the examples shown, the temperature at which color change occurs is quite critical when exposure time is short. For lower soakout temperatures, the changeover will occur in a longer time.

Flatter curves than those shown are possible where changeover will occur within a few seconds after operating temperature is reached, or it will not occur at all.

Many different temperature ratings are available. They can be obtained in a series for every few degrees to the maximum offered (about 2500°F, or 1371°C). This class of indicators is quite inexpensive and is used in industry where only an endpoint is needed and someone can be present to watch for or interpret the results. A disadvantage of these sensors is that the material adheres tightly to the object on which it is placed and presents a problem if it must be removed later.

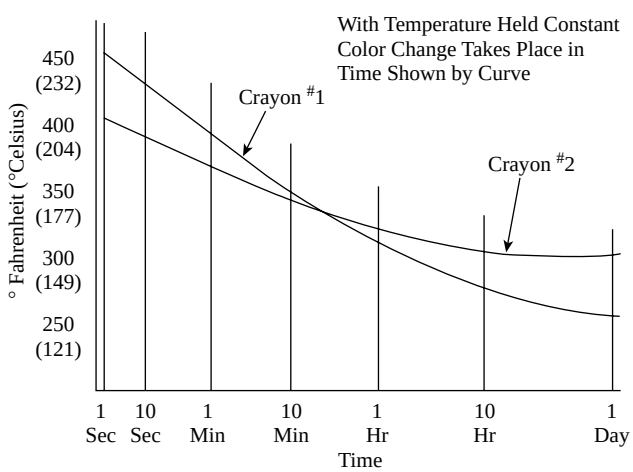

FIG. 4.4a
Time-temperature relationship for color indicators.

© 2003 by Béla Lipták

TABLE 4.4b
The Numbering of Pyrometric Cones[2,3]

Cone	Centigrade	Fahrenheit	Color of Fire	Cone	Centigrade	Fahrenheit	Color of Fire
15	1435	2615		07	990	1814	
14	1400	2552		08	950	1742	
13	1350	2462		09	930	1706	orange
12	1335	2435		010	905	1661	
11	1325	2417	white	011	895	1643	cherry red
10	1305	2381		012	875	1607	
9	1285	2345		013	860	1580	
8	1260	2300		014	830	1526	
7	1250	2282		015	805	1481	
6	1230	2246		016	795	1463	
5	1205	2201		017	770	1418	
4	1190	2174		018	720	1328	dull red
3	1170	2138		019	660	1220	
2	1165	2129		020	650	1202	
1	1160	2120		021	615	1139	
01	1145	2093	yellow	022	605	1121	
02	1125	2057					
03	1115	2039					
04	1060	1940					
05	1040	1904					
06	1015	1859					

PYROMETRIC CONES

The German ceramist Herman Seger invented the first pyrometric cone in 1886.[1] The individual cones look like truncated pyramids. The numbering of the different cones available on the market and the temperatures at which they melt are given in Table 4.4b. The cone melting temperatures listed in the table are based on a heat-up rate of 170°C/h. If the heat-up rate is slower, the cones bend at slightly lower temperatures; if it is faster, it will take a little higher temperature to bend the cones as shown in Table 4.4c.

Because the pyrometric cone measures the effects of both temperature and the length of firing time, it acts as a heat integrator—a function that cannot be easily reproduced by thermocouples or other electronic-type pyrometers. For this reason, the ceramic industry continues to use cones, in addition to recording pyrometers, even in its most modern kilns.

The Ceramics Industry

The indicator material is generally quite similar to the substance of the work under test. Pyrometric cones are actually composed of ceramic materials very carefully blended to soften at a certain temperature. The slender cone is slightly tilted from the vertical; when its softening point is reached, the tip bends over and may actually touch the base. This action can be watched through the window of the firing furnace, or its condition can be studied after cooling. Observation of a fired cone will show the experienced operator if the furnace atmosphere was oxidizing, reducing, or carburizing. If the latter has taken place, the cone will have formed a shell less dense than the interior. Presumably the work will have taken on the same characteristic.

The cones are set in a plaque of fire-clay (called a cone pat) close together and tipped at about 8 degrees from the vertical toward the cone that is expected to bend first. The cone pat is located in front of the peephole where the operator (or a closed-circuit TV camera) can observe its status. Usually three cones are placed on a pat: (1) the controlling target cone is in the center, (2) a cone that melts at a lower temperature is in front of it, and (3) one that melts at a higher temperature is behind it. Figure 4.4d illustrates the visual appearance of a cone pat throughout a batch that was fired to a #4 cone target, corresponding to 2174°F (1190°C). The softening points can be selected very accurately, and accuracies of 2 to 5°F (1 to 3°C) can be obtained.

© 2003 by Béla Lipták

TABLE 4.4c

The Melting Temperatures of Various Cone Types and Cone Numbers That Can Be Expected at Different Heating Rates[4]

Cone Type: Heating Rate: Cone Number	*Large 108°F/h*	*Regular 270°F/h*	*Self-Supporting Reg.*		*Small Reg. 540°F/h*
			108°F/h	*270°F/h*	
022	1074	1092	1087	1094	1157
021	1105	1132	1112	1143	1195
020	1148	1173	1159	1180	1227
019	1240	1265	1243	1267	1314
018	1306	1337	1314	1341	1391
017	1348	1386	1353	1391	1445
016	1407	1443	1411	1445	1517
015	1449	1485	1452	1488	1549
014	1485	1528	1488	1531	1616
013	1539	1578	1542	1582	1638
012	1571	1587	1575	1591	1652
011	1603	1623	1607	1627	1684
010	1629	1641	1632	1645	1686
09	1679	1693	1683	1597	1751
08	1733	1751	1737	1755	1801
07	1783	1803	1787	1807	1846
06	1816	1830	1819	1834	1873
05	1888	1915	1891	1918	1944
04	1922	1940	1926	1944	2008
03	1987	2014	1990	2017	2068
02	2014	2048	2017	2052	2098
01	2043	2079	2046	2082	2152
1	2077	2109	2080	2113	2154
2	2088	2124	2091	2127	2154
3	2106	2134	2109	2138	2185
4	2134	2167	2142	2169	2208
5	2151	2185	2165	2199	2230
6	2194	2232	2199	2232	2291
7	2219	2264	2228	2273	2307
8	2257	2305	2273	2314	2372
9	2300	2335	2300	2336	2403
10	2345	2381	2345	2381	2426
11	2351	2399	2361	2399	2437
12	2383	2419	2383	2419	2471
13	2410	2455	2428	2458	2471

Bar and Hole Indicators

As an alternate to cones, the indicator may take the shape of a long cylindrical bar. The bars are supported at their ends with axes horizontal. On temperature rise they soften and sag at the middle under gravity. The deformation serves as a measure of temperature.

Another group of indicators operates by shrinkage rather than deformation. After removal from the furnace the diameter of a hole in the indicator, or perhaps the indicator's length, is measured and compared with the original dimension.

Like color indicators, pyrometric ceramics should not be considered exact temperature measuring devices. The fusion, bending, and/or shrinking that they undergo is a *time-temperature* relationship and, as such, it is only useful to determine the end point of the specific job. This property is frequently more important than an exact measurement of the instantaneous temperature. The use of this type of indicator may almost be considered an art.

While pyrometer cones are not well suited automatic process control, they are inexpensive and valuable quality

© 2003 by Béla Lipták

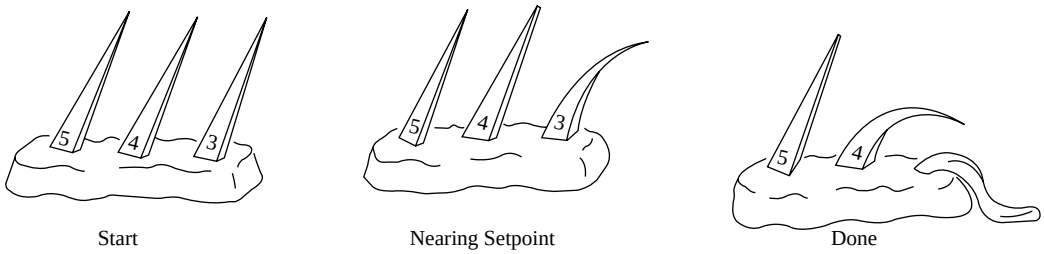

FIG. 4.4d
This is the appearance of the cones at different times during a batch which has a target temperature set by Cone #4.[2,3]

control tools in guaranteeing repeatable qualities of ceramic and similar batch products from kilns and furnaces.

ENGINE TEST RESEARCH

An entirely different material, used in a similar manner, is the metal test plug. This small device can tell temperature by a change in hardness that results from the heat treatment it has received. One use is to have it located carefully in an operating engine, in an otherwise inaccessible spot, where it will respond to the temperatures that occur during operation. When the test is over the plug is removed and carefully analyzed to determine the change in hardness along the horizontal axis.

Time is again a factor, but metal responds much faster than ceramic material. Exposures of less than 1 s duration can be detected. Advantages of this class of temperature sensors are their relative economy and being able to be designed for very specific purposes. Their shortcomings are self evident.

References

1. Rhodes, D., *Kilns Design, Construction and Operation*, Radnor, PA: Chilton, 1968.
2. Kenny, J.B., *Pottery Making*, Radnor, PA: Chilton, 1974.
3. "Temperature-Sensitive Paints, Crayons," *Measurements and Control*, December 1991.
4. Orton Ceramic Foundation, Cone Chart, Westerville, OH, 2001.

Bibliography

Adler, C.B., "Reliability Aspects of Temperature Measurement," Instrumentation, Systems, and Automation Society Conference, Chicago, 2002.

Bluestein, I., "Understanding Contact Temperature Sensors," *Sensors*, October 2001.

Hormuth, G.A., "Ways to Measure Temperature," *Control Engineering*, Reprint No. 948, 1971.

Plumb, H. H., "Temperature: Its Measure and Control in Science and Industry," Vol. 4, 5th Symposium on Temperature, National Bureau of Standards, American Institute of Physics, Instrumentation, Systems, and Automation Society, Pittsburgh, PA, 1972.

"Temperature-Sensitive Paints, Crayons," *Measurements and Control*, December 1991.

Weiss, M., "Color Analysis for Process Control," *Control*, June 1998.

© 2003 by Béla Lipták

4.5 Fiber-Optic Thermometers

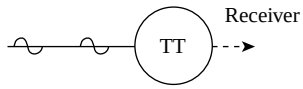

Flow Sheet Symbol

H. L. DANEMAN (1995) **B. G. LIPTÁK** (2003)

Types of Sensors:	Light-pipe, blackbody, dual-wavelength, crystal, gap, and fluoroptic
System Components:	Fiber-optic assembly, infrared detector, and electronic console
Applications:	Temperature measurement of hard-to-reach objects. Used in calendering, crystal growing, engine heads (spark plugs), glass fore-hearths, induction heating, kiln hot spots, medical hyperthermia, microwave packaging, polymer melting, printer operations, reactive-ion etching, transformer windings, vacuum processing, web drying, and welding.
Wavelengths Used:	0.7 to 8 μm for inexpensive total radiation detectors, 2.2 to 3.8 μm for penetrating intervening atmosphere, 2.2 μm for metals, 4.5 μm for flames, under 8 μm for glass
Field of View:	The ratio of target distance to target size can range from 3:1 to 900:1.
Fiber Size and Lengths:	Single fiber is 0.5 mm in diameter, 4-fiber array is 0.9 mm in diameter. The number of fibers per cable ranges from 30 to 400; their lengths range from 10 to 300 ft (3 to 100 m).
Temperature Ranges:	Can detect from 212°F (100°C), but the typical range is from 500 to 5500°F (260 to 3600°C); some units go up to 6500°F (3600°C). Allowable ambient temperature range is from –76 to 535°F (–60 to 315°C). –50°F to 6500°F (–46 to 3600°C) for Spot instruments; 100 to 3500°F (37 to 2000°C) for Line Scanners; 0 to 3500°F (0 to 2000°C) for Thermal Imagers.
Transmission Range:	0.7 to 8 μm
Spectral Response:	2.0 to 2.4 μm
Response Time:	0.3 s or better
Total Acceptance Angle:	22 to 60°
Stability:	Drift is under 0.5°F (0.3°C) over period of 10 days.
Inaccuracy:	From as low as 0.2°F (0.1°C) to 1% full scale.
Costs:	Transmitters are in the $2500 to $4500 range. A 0.1°F resolution microprocessor-based unit with PID algorithm included is about $6000; the same unit with 2, 4, 6, or 8 channels is about $15,000, thermal imaging systems up to $60,000.
Partial List of Suppliers:	Accufiber Div. of Luxtron Corp. (www.luxtron.com) Barber-Colman Industrial Instruments (www.barber-colman.com) FLIR (www.flir.com) Indigo Systems (www.indigosystems.com) Hart Scientific (www.hartscientific.com) Ircon (www.ircon.com) Land Instruments (www.landinst.com) MetriCor Inc. (www.metricorinc.com) Mikron Instruments Co. (www.mikroninst.com)

© 2003 by Béla Lipták

Omega/Vanzetti (www.vanzetti.com)
Raytek (www.raytek.com)
Square D, Infrared Measurement Div. (www.squared.com)
Technology Dynamics Inc. (www.technologydynamicsinc.com)
Wahl (www.palmerinstruments.com/wahl/wahl.html)
Williamson Corp. (www.williamsonir.com)

Infrared (IR) and radiation pyrometers are discussed in Section 4.9. This section will concentrate on combining those principles with the use of optical fibers, which provide the ability to look at the temperature of small objects or to look around opaque objects.

Noncontact thermometry has many advantages, particularly in regard to measuring temperatures of objects that are extremely hot or corrosive, are moving or fragile, are in strong electromagnetic (radio frequency [RF], microwave, or direct current magnetic) fields, or are subject to measurement error due to heat loss by conduction. Until the glass-fiber optic cable became available, noncontact thermometry required line-of-sight vision between the sensor and the target object. The elimination of this restriction makes it possible for the fiber-optic thermometer to solve many difficult measuring problems.

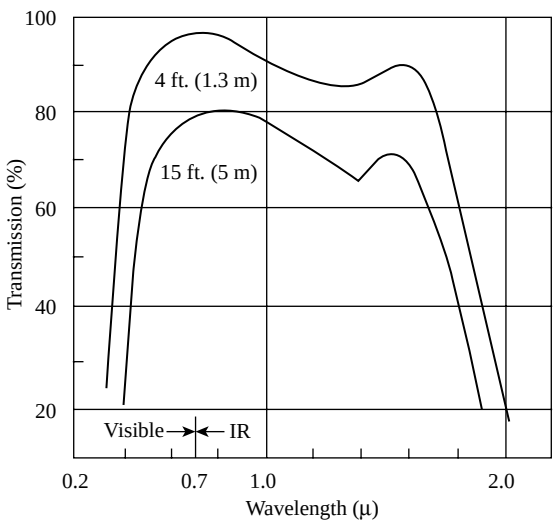

FIG. 4.5a
The infrared transmission of glass fibers designed for high-temperature applications varies according to cable length. The sensors used for this purpose are filtered in the 0.8 μm region.[1]

Optical fiber thermometry (OFT) depends on total internal reflection within a thin fiber element. Absorption of IR energy by glass fibers has limited the low end of the range to 660°F (350°C) (see Figure 4.5a). Developments in telecommunications and glass research now promise to facilitate lower temperature measurements using alternative spectral bands (see Table 4.5b).

Some laboratory-standard fiber-optic instruments offer even greater accuracy than a type S thermocouple—±0.01% at 1832°F (1000°C) with a resolution of 0.01°C.

THERMOMETER DESIGN

Fiber-optic measurement systems consist of three elements: the fiber-optic assembly, an IR detector, and an electric console. A single fiber or bundle of several fibers gather IR radiation from the target, transmit to the detector, and convert the radiation to a voltage suitable to the required function.

Fibers are sensitive only to the IR portion of the spectrum and filter out other forms of radiation; they are not activated by flames and fumes. Even though IR radiation becomes detectable at about 140°F (60°C), it is best to use it at temperatures over 212°F (100°C) in any monitoring application.

Fibers, whether single or in bundles, are always enclosed in metal or ceramic sheaths for protection. A unique characteristic of the special glass fibers is the ability to bend light and to transmit it for distances up to 30 ft (9.1 m) without distortion or loss of definition.

Perhaps the one outstanding feature of fiber-optic systems is the ability of the fibers to withstand and function in hostile environments, including intense heat. Fibers maintain resolution exceeding one degree change at temperatures over 2000°F (1100°C). At extreme high temperatures and under

TABLE 4.5b
Infrared Fiber-Optic Cable Comparative Specifications

	Glass	*Quartz*	*IR*
Fiber diameter	0.002 in.	0.008 in.	0.008 in.
Fibers/cable	200–400 fibers/bundle	50 fibers/bundle	30 fibers/bundle
Cable diameter	0.063 in.	0.063 in.	0.063 in.
Transmission range	0.5–1.4 μm	0.7–2.4 μm	0.5–4.5 μm
Ambient limits	500°F	500°F	300°F
Total acceptance angle	68°	50°	22°
Sensor temperature limits	1000–5000°F	200–2000°F	125–2000°F
Flexibility rating	Excellent	Good	Limited

© 2003 by Béla Lipták

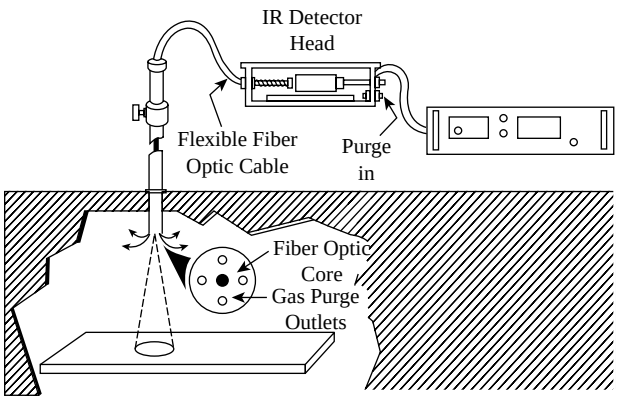

FIG. 4.5c
The optical fiber thermometer consists of three components: the OFT assembly, the infrared detector, and the electronic console. (Courtesy of Omega/Vanzetti Systems Inc.)

other severe conditions, the fibers are protected with air or inert gas purging or by water cooling.

The advantages of using fiber optics in noncontact temperature measurement application include their inertness, relatively rugged design, small size, and ability to look around opaque objects (Figure 4.5c). With the addition of a telescopic lens system, the same fiber-optic assembly can be made to monitor different target areas at various focal distances.

Radiation proportional to temperature is conducted along an optical fiber to a sensor connected to a measuring instrument. Variations on this basic principle make it possible to adapt this design to a variety of applications.

As with any optical instrument, a fiber-optic thermometer depends on observations of brightness or on total radiation. The measurement technique most often used is characterized by the distribution of energy by wavelength and field of view.

A number of factors affect the choice of wavelength. For example, general-purpose instruments use a wide energy band (8 to 20 μm). Inexpensive instruments cover 0.7 to 8 μm in order to include most of the total energy radiated by the hot object. For penetration of intervening atmosphere, shorter wavelengths of 2.2 to 3.8 μm are preferred. For metals (which have a high reflectance), the narrow band around 2.2 μm reduces the effect of emissivity variations. (For definitions of terms such as *emissivity*, see Section 4.9.)

Glass is more transparent at the shorter wavelengths (e.g., 0.8 μm). Reflection becomes critical above 8 μm, so the shorter wavelengths are used for molten glass temperature measurement. Flames (preferably clean) can best be measured at a wavelength of 4.5 μm.

Field of view is the other significant parameter characterizing optical measuring instruments. This is described in terms of ratio of the target distance to the target size, and ranges from 900:1 to 3:1. A single wavelength instrument measures the average temperature of the body filling its field of view. A dual-wavelength instrument measures the hottest part of the target within its field of view.

THE OPTICAL FIBER THERMOMETER (OFT) SENSORS

The available variations in fiber-optic probe sensor designs are shown in Figure 4.5d. The fiber-optic sensors fall into four categories: light-pipe, blackbody, dual-wavelength, and gap types.

The light-pipe design transmits the radiation from the target to the detector through an open tip, as shown in Figure 4.5e. The blackbody-type unit radiates heat from a cup of material, such as a thin coat of precious metal, surrounding the tip.

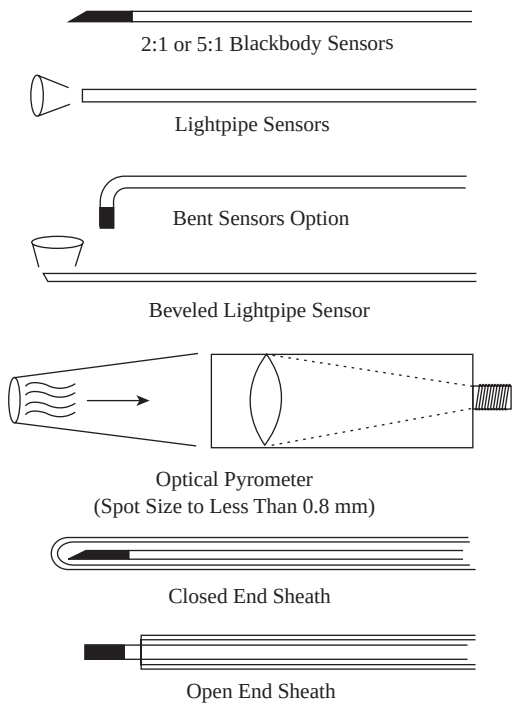

FIG. 4.5d
The sensor portion of the OFT probe can be configured in many ways.

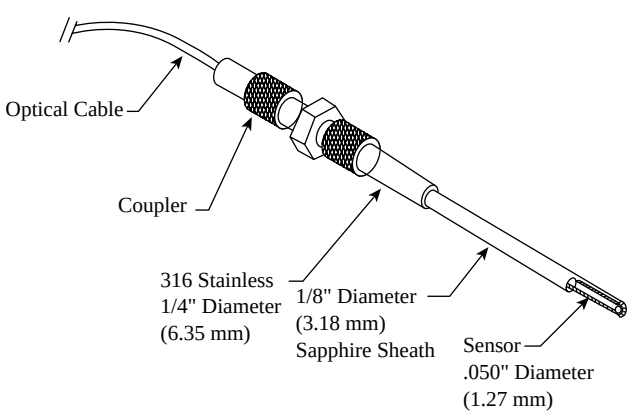

FIG. 4.5e
Open-ended sheath design of the light-pipe sensor. (Courtesy of Accufiber Div. of Luxtron Corp.)

© 2003 by Béla Lipták

A sapphire optical rod is coated at the tip with a thin film of iridium or platinum and aluminum oxide. At elevated temperatures, the tip emits a band of wavelengths that are transmitted to a detector for measurement (Patent No. 4,576,486). A schematic of the complete system is shown in Figure 4.5f.

In the dual-wavelength optical pyrometer sensor, the radiation is focused through a lens onto the optical fiber link from a distance of up to 16 ft (see Figure 4.5g).

In another design, light of a fixed wavelength spectrum is transmitted from the instrument through the optical fiber to the sensor. Here the light is converted and returned as a different wavelength spectrum, the value of which *depends on the temperature* of the sensor. The *wavelength* of the *returned* light is scanned and presented as a temperature reading on the instrument display or output to one of the optional interfaces.

The Fabry-Perot thermometer uses a temperature-sensitive spacer that varies a gap width, establishing a series of spectral bands by means of optical interference (Figure 4.5h). Because it is entirely optical from the measurement end of the fiber to the detector, it can be made very small. The measuring range is 35 to 55°C with a resolution of 0.1°C. The detector can be a pyroelectric detector amplified by an FET preamplifier.

The fluoroptic sensor measures the decay time of a fluorescent material (magnesium fluorogermanate), which, after being energized by a short-wavelength light pulse, varies proportionally with temperature. The phosphors can be compressed into intimate contact with a surface to measure with little conduction loss (Figure 4.5i).

In Figure 4.5j, the fluorescent signal decay characteristics of the fluoroptic sensor are shown on the top, and the basic calibration curve of the phosphor sensor is shown on the bottom.

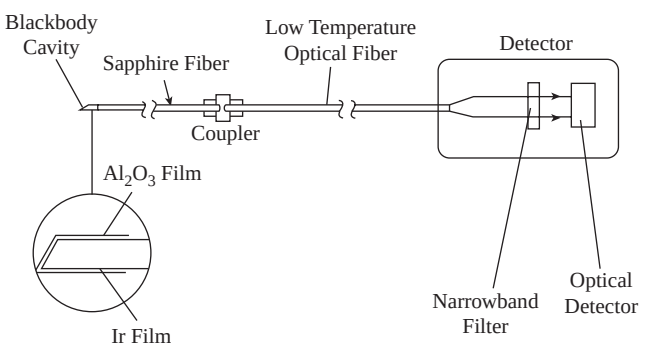

FIG. 4.5f

Blackbody-type OFT sensor system. (Courtesy of Accufiber Div. of Luxtron Corp.)

CONCLUSIONS

The advantages of OFT pyrometry include: the small size of the sensor, which does not require line-of-sight observation of the object and can be furnished with blackbody fibers. OFTs are not affected by RF, microwave, or electromagnetic fields or by shock and vibration; their range is wide and response fast, and they can average or provide temperature profiles through noninvasive remote measurements of temperatures of solid objects or immersed in liquids.

The main disadvantage of OFT pyrometry is the high unit cost of this measurement. The unit cost can be reduced through multiplexing, so that several OFT sensors are connected (through a multiplexer) to a common set of electronics.

Fiber-optic thermometers offer many options resulting in application to a wide range of industrial temperature measurements. A principal advantage is electrical and, sometimes, even physical isolation from the target. The glass or quartz fibers that transmit the temperature signal to a detector can be an integral part of the measurement, reducing lag and conduction error. This is true in the case of the blackbody

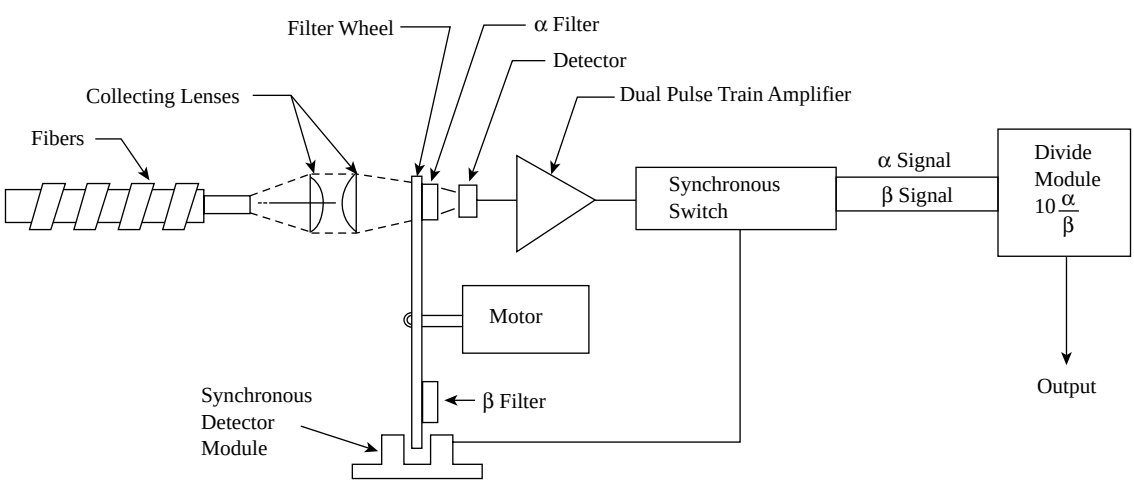

FIG. 4.5g

This dual-wavelength design measures radiant flux at two separate wave bands and calculates the signal ratio to determine target temperature. The technique can measure low and varying emissivity targets and small moving objects that do not fill the field of view.[1]

© 2003 by Béla Lipták

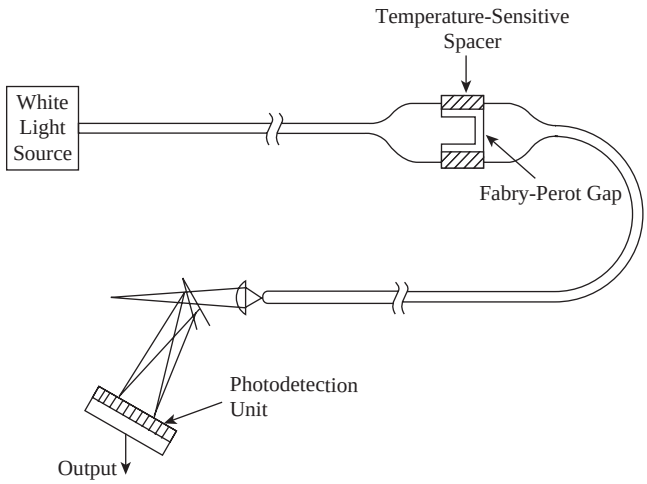

FIG. 4.5h
Fabry-Perot gap-measuring system.

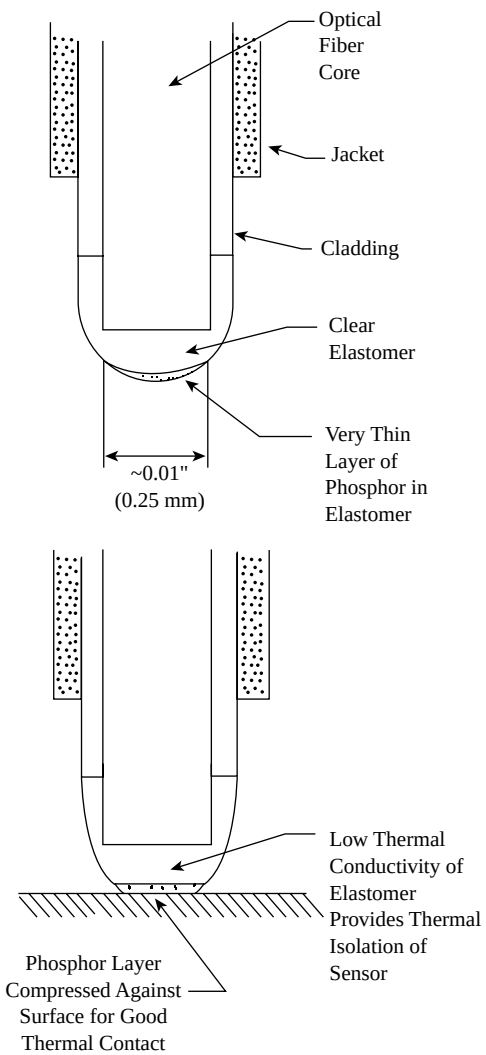

FIG. 4.5i
In this contact probe, the phosphor-sensing layer is on the outer surface of a transparent elastometric tip that conforms to the surface of interest.[2]

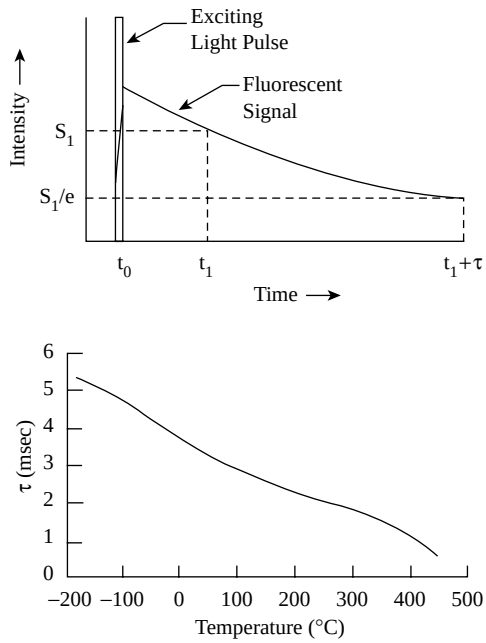

FIG. 4.5j
Decay and calibration characteristics of the phosphor sensor.[2] *Top: Method for measuring the fluorescent decay time of the phosphor sensor. The time between the initial measurement of the signal level, S_1, and the crossover of the decaying signal with $S_{1/e}$ is the decay time. Below: Plot of decay time vs. temperature for the magnesium fluorogermanate phosphor sensor. This is the basic calibration curve for the system.*

sensor, which incorporates a blackbody cavity on the surface of the fiber tip, and the surface temperature sensor's adhering to a phosphor emitter pressed onto its tip.

When selecting a fiber-optic thermometer for a given application, it is necessary to review all types of fiber-optic instruments for wavelength and field of view in order to optimize performance.

References

1. Barron, W.R., "Fiberoptic Infrared Thermometry," *Sensors*, September 1990, pp. 74–77.
2. Wickersheim, K.A. and Sun, M.H., "Fiberoptic Thermometry and Its Applications," *Journal of Microwave Power*, 1987, pp. 85–94.

Bibliography

Adler, C.B., "Reliability Aspects of Temperature Measurement," Instrumentation, Systems, and Automation Society Conference, Chicago, 2002.
Adrian, P., "Technical Advances in Fiberoptic Sensors: Theory and Applications," September 1991, pp. 23–45.
Bluestein, I., "Understanding Contact Temperature Sensors," *Sensors*, October 2001.

© 2003 by Béla Lipták

de Santoli, L., Ruffino, G., and Santoboni, S., "Calibration of a Fiberoptics Radiation Thermometer," *High Temperature High Pressure*, Vol. 5, 1973.

Desmarais, R. and Breuer, J., "How to Select and Use the Right Temperature Sensor," *Sensors*, January 2001.

"Fiberoptic Sensing of Physical Parameters," *Sensors*, October 1988, pp. 21–26.

"Fiberoptic Thermometry for Difficult Surface Temperature Measurements," *Sensors*, September 1990, pp. 17–21.

Food and Drug Administration, Center for Devices and Radiological Health, CFR 1040 and Laser Notice 50, July 2001.

Fraden, J., *Handbook of Modern Sensors*, 2nd ed., Heidelberg: Springer-Verlag, 1997.

Hage, J., "Smart Temperature Transmitter Accents Accuracy," *Control*, September 1999.

International Electrotechnical Commission, Safety of Laser Products, IEC-60825, November 2001.

Intrieri, A. J., "Optical Fibers Look Around Obstacles to Measure Temperature," *Control Engineering*, December 1997.

Johnson, R., "Measuring the Hot, Difficult and Inaccessible," *Control Engineering*, June 2001.

Katzir, A., Bowman, H.F., Asfour, Y., Zur, A., and Valeri, C.R., "Infrared Fibers for Radiometer Thermometry in Hypothermia and Hypothermia Treatment," *IEEE Transactions on Biomedical Engineering*, Vol. 36, June 1989, pp. 634–637.

Krigman, A., "Guide to Selecting Non-Contact Temperature Instrumentation," *InTech*, June 1983, pp. 23–40.

Magison, E., "Temperature Measurement," *In Tech*, October 25, 2001.

Michalski, L. et al., *Temperature Measurement*, 2nd ed., London: John Wiley & Sons, 2001.

Ovren, C., Adolfsson, M., and Hok, B., "Fiber-Optic Systems for Temperature and Vibration Measurements in Industrial Applications," Conference on Optical Techniques in Process Control, The Hague, June 14–16, 1983.

Pepe, R.C., "Fiberoptic Calibration Consideration," National Conference of Standards Laboratories, Boulder, CO, July 1987, pp. 66-1–66-12.

Prentice, G.R. "Seven Reasons Why Temperature Transmitters Are Better than Direct Wiring," *Process Heating*, June 1999.

"Radiation Thermometry," *Measurements and Control*, February 1991, pp. 192–206.

Saaski, E.W., Hartl, J.C., and Mitchell, G.L., "A Fiberoptic Sensing System Based on Spectral Modulation," Instrumentation, Systems, and Automation Society, Vol. 7, 1986, pp. 1177–1184.

Stockdale, R.B., "New Digital Control Systems Need Better Temperature Sensors," *Control Engineering*, November 1991.

Stockham, R., "Temperature Transmitters Take the Lead Over Direct Wiring," *Control and Instrumentation*, Product Survey Directory, 1999.

Tinsley, F.G. and Adams, B., "Evolution in the Application of Optical Fiber Thermometry," Paper #91-0308, Instrumentation, Systems, and Automation Society Conference, Toronto, 1991.

Volbrecht, A. and Gordon, W., "Temperature Measurement: Making Sense of it All," *Sensors*, June 1998.

Wickersheim, K. and Sun, M., "Phosphors and Fiberoptics Remove Doubt from Difficult Temperature Measurements," *Research and Development*, Vol. 14, November 1986.

Wohlstein, S., "Fiberoptics," *Measurements and Control*, September 1991.

© 2003 by Béla Lipták

4.6 Filled-Bulb and Glass-Stem Thermometers

T. J. CLAGGETT, R. W. WORRALL (1969, 1982) **B. G. LIPTÁK** (1995)
J. E. JAMISON (2003)

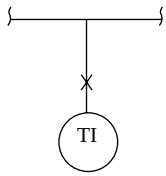

Flow Sheet Symbol

Applications: Glass-stem units are used only as thermometers; filled-bulb elements are also used as switches, transmitters, and controllers.

Designs: Glass-stem units are straight, back-angle, and multiangle thermometers; filled systems are frequently surface- or flush-mounted and connected to the process by capillary.

Materials of Construction: Industrial glass-stem thermometers have aluminum, Cycolac, or other plastic cases; spring-loaded glass or plastic windows; and stainless steel stems. For the filled systems, the cases can be aluminum, brass, phenol, polypropylene, nickel-plated steel, or stainless steel; the thermometer movement is usually either bronze or stainless steel, and the bulb and the capillary can be copper, carbon steel, Monel, Hastelloy, or stainless steel. Thermowells can be brass; bronze; carbon steel, which can be Nickel plated; 304/316 stainless steel; Monel; or Hastelloy B/C.

Scales and Dials: Glass-stem thermometer scales are usually straight, with 5, 7, 9, and 12 in. (125, 175, 225, and 305 mm) lengths. Filled thermometer scales are usually circular and have 3.5, 4.5, 6, 8.5, or 12 in. (88, 113, 150, 213, or 300 mm) diameters.

Bulb Sizes: Mercury-, vapor-, and gas-filled bulbs are usually 11/16 × 4 in. diameter (17 × 100 mm), with some available as 3/8 × 3 in. diameter (9 × 76 mm). Liquid-filled bulbs are usually 3/8 × 5 in. (9 × 125 mm).

Capillary Lengths: Standard lengths from 5 to 80 ft (1.5 to 24 m) with maximum limit of 200 ft (61 m) with gas, vapor, and fully compensated liquid or mercury-filled systems. Case-compensated liquid and mercury systems are limited to 15 ft (4.5 m) and 50 ft (15 m), respectively.

Temperature Ranges: About a dozen glass-stem thermometer ranges are available between –40 to 110°F (–40 to 40°C) and 50 to 750°F (10 to 400°C). These ranges are similar to those of mercury-filled systems. Gas-filled systems are normally available between –100 and 100°F, and 400 and 1200°F (–100 and 100°C, and 200 and 650°C). Vapor-filled systems have narrower ranges, from –20 to 120°F and 250 to 450°F (–30 to 50°C and 50 to 150°C). Special spirit-filled glass stem models can attain –326°F (–199°C). Some mercury-filled special glass stems can reach 1200°F (649°C).

Inaccuracy: Glass stem: either 1% of full scale, or one scale division, which as a minimum is 1°F (0.5°C). Filled systems: inaccuracies are also limited to one scale division.

Costs: A multiangle glass-stem thermometer with stainless steel wetted parts, a 6 in. (150 mm) thermowell, and a 9 in. (255 mm) scale is $250. A 4.5 in. (113 mm) diameter direct-mounted filled thermometer with a 6 in. (150 mm) stainless steel thermowell is about $175, while a 12 in. (300 mm) diameter, flush-mounted unit with 125 ft (38 m) of armored stainless steel capillary is about $1000.

Partial List of Suppliers: ABB Automation (ex-Kent-Taylor) (www.abb.com)
Ametek Inc. U.S. Gauge Div. (www.ametekusg.com)

© 2003 by Béla Lipták

Anderson Instrument Co. (www.andersoninstrumentco.com)
Aristoquatic Inc. (www.accesslatinamerica.com)
Ashcroft-Heise, a Div. of Dresser Industries (www.dresserinstruments.com)
Brooklyn Thermometer Co. (www.brooklynthermometer.com)
Buffalo Gauge Inc. (www.buffalogauge.com)
Dresser Industries, Instrument Div. (www.dresser.com/instruments)
Duro United Instrument Company (www.fluidproducts.com)
Enercorp Instruments Ltd.
Fenwal Controls Inc. (www.fenwalcontrols.com)
Fischer & Porter Co., a Unit of ABB (www.abb.com)
Foxboro Co., an Invensys Company (www.foxboro.com)
FW Murphy (www.fwmurphy.com)
Griffith Industrial (www.versagauge.com)
H-B Instrumentation-Temperature Products Div. (www.hbinstrument.com)
Honeywell Industrial Controls (www.iac.honeywell.com)
Johnson Controls (www.johnsoncontrols.com)
Jumo Process Control Inc. (www.jumoprocesscontrol.com)
Marsh Instrument Co. (www.marshbellofram.com)
Marshalltown Instruments (www.marshbellofram.com)
Mercoid Div. of Dwyer Instruments (www.dwyerinstruments.com)
Moeller Instrument Co. (www.moellerinstrument.com)
Omega Engineering Inc. (www.omega.com)
Palmer Instruments Inc. (www.palmerinstruments.com)
Princo Instruments Inc. (www.princoinstruments.com)
Sandelius Instruments Inc. (www.sandelius.com)
Tel-Tru Manufacturing (www.teltru.com)
3D Instruments (www.3dinstruments.com)
Temtex Temperature Systems & Components Co. (www.temtex.net)
Trend Instruments Inc. (www.trendinst.com)
H.O. Trerice Co. (www.hotrerice.com)
United Electric Controls (www.ueonline.com)
Weiss Instruments (www.weissinstruments.com)
Weksler Instruments Corp. (www.dresserinstruments.com)
WIKA Instrument Corp. (www.wika.com)

In a glass-stem thermometer the volumetric change resulting from thermal expansion is interpreted into temperature. In a filled system, the pressure inside a closed thermal system is used to measure temperature. The detected pressure is a function of not only the process temperature at the bulb, but also of other factors that can introduce errors. These include: (1) ambient temperature variation, (2) barometric pressure variation, and (3) the hydrostatic head of the liquid in the capillary, if it is at a different elevation from the readout. In order to obtain accurate temperature readings, these error sources must be minimized, as will be explained in this section.

GLASS-STEM THERMOMETERS

The glass-stem thermometer was the first closed thermal expansion system and has been known since Gabriel Daniel Fahrenheit investigated the expansion of mercury in the 18th century.

Mercury or some other liquid (alcohol, pentane) fills the glass bulb (see Figure 4.6a) and extends into the capillary bore of the stem. The space above the mercury column to the scaled top is evacuated, but occasionally it may be filled with an inert dry gas, such as nitrogen, to increase the temperature range.

The expansion of pure mercury is 0.01%/°F (0.005%/°C) and very linear; therefore, the volume of the bulb must be about 10,000 times the volume of the capillary between two marks 1°F (0.56°C) apart.

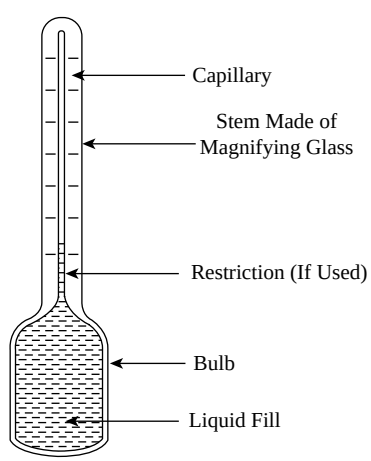

FIG. 4.6a
Liquid-in-glass thermometer.

© 2003 by Béla Lipták

Although bulb and capillary could be made from the same type of glass, it is more convenient to make the bulb from glass with a good stability factor and the capillary from glass which is easier to work. For accurate measurements, the capillary must be properly annealed after it is drawn to the correct bore. Uniformity of bore is desirable but not absolutely necessary if the thermometer is calibrated at a sufficient number of points.

The glass-stem thermometer can be made for a very narrow range in temperature. For instance, consider a clinical thermometer whose full range may be 96 to 102°F (35.6 to 38.9°C) and with a stem 4 in. (101.6 mm) long, active length. If the bulb volume is 0.03 in^3 (0.5 cm^3), the diameter of the bore is about 0.001 in. (0.025 mm). The stem is frequently designed to magnify such a small column for easier readability.

Another design feature of some glass-stem thermometers, notably the clinical type, is a restriction purposely placed in the capillary that prevents the liquid from returning toward the bulb when the thermometer is removed from the warmer object. This creates a separation of the column in the stem. In this case, it is a desirable feature because it permits a highest point reading or peak picker. If the separation occurs inadvertently in any glass-stem thermometer, the result is an erroneous reading. The column can usually be rejoined by shaking or tapping.

The design of a glass-stem thermometer requires that the filling material be a liquid over the entire range of temperature desired. Mercury is most suitable and can be used from its freezing point (−38°F, or −39°C) up to nearly its boiling point (over 1000°F, or 538°C). At this upper limit the space above the mercury column must be under great pressure with an inert gas to prevent evaporation of mercury from the top of the column. Alcohol and a few other hydrocarbons may be used for low temperatures. Colorfast dyes are usually added to the liquid to increase visibility.

To minimize accident breakage, a metallic thermowell is sometimes used to protect the bulb. This has no effect on the accuracy but may reduce the speed of response. Figure 4.6b illustrates the industrial packaging of the mercury or liquid-in-glass thermometer. These straight scale units have been ruggedized for mechanical strength and are still used in heating, ventilation, and air conditioning (HVAC) applications. In most other industries their use has been discontinued, mostly because of the concern about the toxicity of mercury.

Advantages of liquid-in-glass thermometers are their low cost, simplicity, and long life if treated properly. Disadvantages are difficult reading, confinement to local measurement, and nonadaptability to recording or automatic control. They also break very easily.

FILLED THERMAL SYSTEMS

A filled thermal system is basically a pressure gauge connected by small bore tubing to the bulb acting as the temperature sensor. The whole system is gas-tight, and filled with an appropriate confined gas or liquid under pressure.

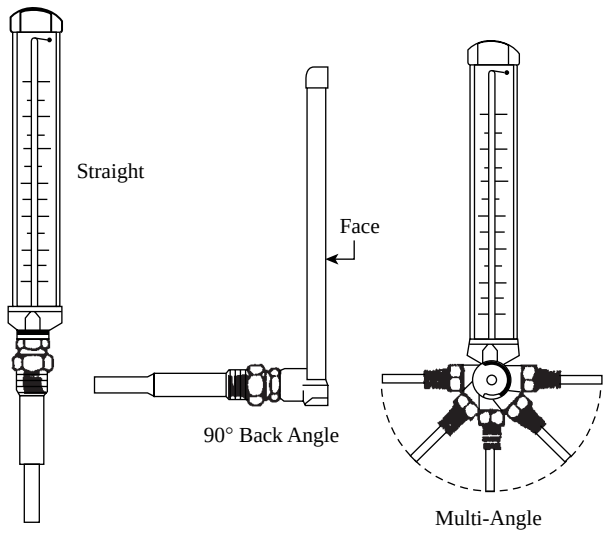

FIG. 4.6b
Industrial glass-stem thermometers. (Courtesy of ABB Automation [ex-Kent-Taylor].)

There are many different types of filled systems, each having certain peculiarities which give it advantages over others.

The Scientific Apparatus Makers Association has classified filled-system thermometers into four major classes according to filling material. Table 4.6c has been prepared to compare some of the properties of the various thermal systems.

The basic components of a filled-bulb capillary thermometer are illustrated in Figure 4.6d. As mentioned previously, the use of mercury filling has been discontinued in most industrial applications because of health concerns. The use of both mercury and liquid fillings have also lost ground because of the expense associated with compensating for the ambient effects on the capillary plus the errors caused by elevation differences between bulb and readout. Still extensively used are the gas and vapor fillings, but these too are limited in their usefulness. The gas-filled bulb is large, as is the temperature span required to operate it. The vapor-filled system is also limited due to its nonlinearity and its potential for problems caused by cross-ambient operation or by errors due to elevation.

BULBS, WELLS, AND CAPILLARIES

The temperature-sensitive element, the bulb, comes in many sizes and shapes to handle the many different applications. It is good practice to use the largest bulb that will do the job. This will cut down on ambient temperature errors, and permit smaller spans and longer capillaries.

Plain bulbs are used where the measured medium is not under pressure and will not harm the bulb material. If this is not the case, a separate well to protect the bulb from the

© 2003 by Béla Lipták

TABLE 4.6c
Thermal Systems Compared

SAMA Classification	*Type Compensation*	*Fill*	*Measured Temperature °F (°C)*		*Span °F (°C)*		*Scale Linearity*	*Speed of Response (No Well)*	*Elevation Head Effect*	*Overrange Capabilities*	*Superior Features*	*Less Desirable Features*
			Max.	*Min.*	*Max.*	*Min.*						
I IA IB	None Full Case	Liquid	600 (315)	–125 (–87)	300 (167)	30 (17)	Linear Except at Low Temps.	6–7 sec	Significant; Must Be Compensated	About 100%	Smaller Bulb Sizes; Narrow Spans; Lower Cost	Shortest Capillary; Compensation More Difficult and Required
IIA	Not Required	Vapor	Only Above Ambient to 600 (316)		400 (222)	60 (33)	Scale Divisions Increase with Temp. Increase	4–5 sec Except When Passing Through Ambient	Appreciable Compensation	Small or None	Low Cost; Long Capillary Lengths Available; Ambient Temperature Comp. Not Req'd; Fast Speed or Response	Problem with Cross-Ambient; Nonlinear Scale
IIB			Only Below Ambient to –40 (–40)						None			No Overrange Capacity; Elevation Error Possible
IIC			Above and Below Ambient Not Through						Not Usable; Can't Compensate			
IID			Above, Through and Below Ambient						Same as IIA			
IIIA IIIB	Full Case	Gas	1400 (760)	–450 (–268)	1200 (667)	120 (67)	Linear Except Very Low Temps.	4–7 sec	None	150–300% Varies with Span	No Head Effect; Greatest Overrange; Greatest Range of Temperatures; Good for Averaging	Large Bulb Size; Widest Spans Req'd; Least Power for Control
VA VB	Full Case	Mercury	1200 (649)	–40 (–40)	1200 (667)	50 (28)	Linear	4–5 sec	Not Significant Up to 30 ft (9.1 m)	100% or More	Most Linear Scale; Least Difficult to Compensate; Most Power for Control Elements; Small Bulb	Objection to Mercury on Accidental Breakage; Compensation Required

© 2003 by Béla Lipták

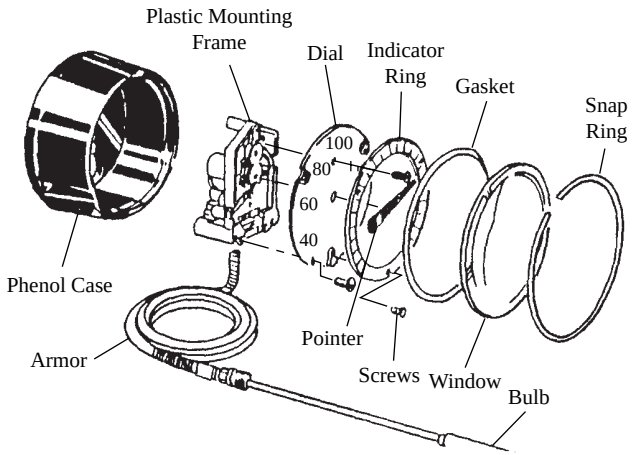

FIG. 4.6d
The components of a filled-bulb capillary thermometer. (Courtesy of Ashcroft-Heise, a Division of Dresser Industries.)

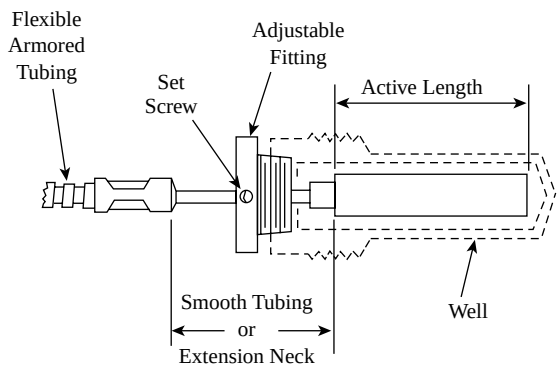

FIG. 4.6e
Plain bulb with adjustable fitting and well.

process medium is needed. This will slow down the response time even more than the 4 to 7 s speed of response range given in Table 4.6c.

The speed of response generally doubles with the doubling of bulb diameter and tends to be the fastest with vapor or gas and the slowest with liquid filling, with mercury and Class IID vapor filling in the middle. When thermowells are added to the bulb, the speed of response slows as follows:

- 12 to 24 s for 0.25 in. diameter (6 mm)
- 20 to 35 s for 0.38 in. diameter (9 mm)
- 25 to 50 s for 0.5 in. diameter (13 mm)
- 40 to 75 s for 0.75 in. (19 mm) diameter

Figure 4.6e illustrates a filled bulb installed in a thermowell.

Higher speed of response can be obtained with a long, thin, bendable bulb used to sense the average temperature in large areas. Another way of presenting a long bulb is by coiling it. For use in low-velocity gas flow temperature measurement, the coil is set at the factory and cannot be uncoiled (Figure 4.6f).

Most bulbs are made of stainless steel, which is relatively inert and will withstand high temperatures. Other materials are readily available.

The relatively fragile thin-wall capillary should be protected by a flexible armored stainless steel or PVC-covered bronze tubing. An extension neck to the bulb prevents the tubing from being immersed directly in the measured medium. Bendable smooth steel tubing might also be used for capillary protection.

Class I: Liquid-Filled Systems

These systems are completely filled with a liquid (other than mercury) and operate on the principle of liquid expansion with an increase of temperature (Figure 4.6g). The filling fluid is usually an inert hydrocarbon, such as xylene (C_8H_{10}),

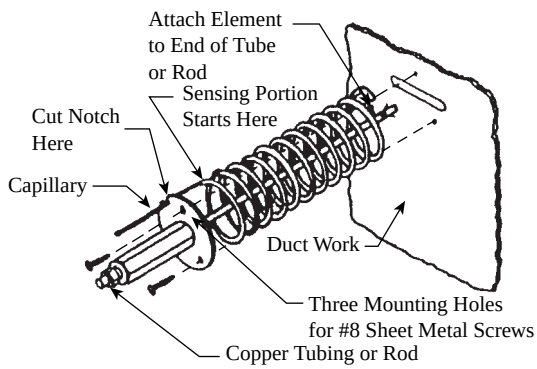

FIG. 4.6f
Averaging capillary for air duct installation. (Courtesy of Johnson Controls.)

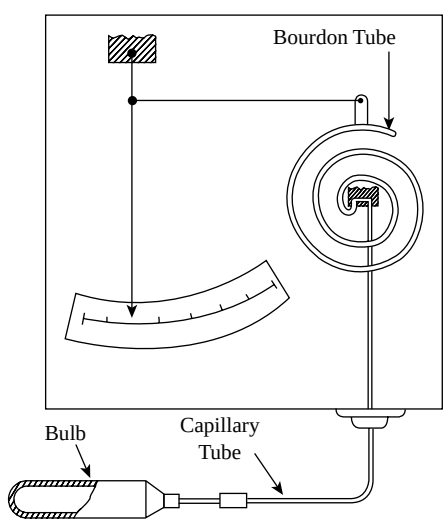

FIG. 4.6g
Liquid-filled capillary-type thermometer.

© 2003 by Béla Lipták

which has a coefficient of expansion six times that of mercury and makes smaller bulbs possible. Other liquids (even water) are sometimes used. The criterion is that the pressure inside the system must be greater than the vapor pressure of the liquid to prevent bubbles of vapor from forming in the spiral. Also, the liquid should not be allowed to solidify even in storage or the calibration may be affected.

The minimum operating temperature is usually set by the freezing point of the filling liquid, which is usually between −100 and −350°F (−75 and −210°C). The maximum operating temperature is set by the point at which the filling liquid is no longer stable, usually around 600°F (315°C). The minimum span range is a function of bulb size, while the maximum is a function of linearity. With larger bulbs the span can be narrowed to 22 to 45°F (12 to 25°C), while the maximum limit on the span is about 300°F (167°C) due to the nonlinearities caused by expansivity and compressibility of the filling liquids.

The maximum temperature to which the bulb can be exposed without damage is defined as the allowable overrange of the system. Overrange is usually expressed as a percentage of the span over the full range value; in the case of liquid filling, overrange is around 100%. Therefore, if the range of a liquid-filled thermometer is 100 to 300°F and its overrange protection is 100%, its bulb can be exposed to a maximum temperature of 500°F.

Class II: Vapor Systems

The pressure element, capillary, and bulb of a Class II system have the filling medium in both the liquid and vapor form. The interface between the two must occur in the bulb, and this will move slightly with temperature, affecting the pressure.

The pressure within the system is a function of the vapor pressure of the filling fluid at the operating (bulb) temperature. The filling fluid is usually so selected as to give a 100 PSIG (6.9 bars) change in its vapor pressure as the bulb temperature goes through the span of the thermometer. This much change is necessary to keep the error due to barometric pressure changes to less than 0.5% of full scale. The filling fluids used include methyl chloride, sulfur dioxide, butane, propane, hexane, methyl ether, ethyl chloride, ethyl ether, ethyl alcohol, and chlorobenzene. Each has a different vapor pressure–temperature relationship. For lower temperatures ethane filling can be used; it changes its vapor pressure from 20 to 600 PSIG (1.4 to 41 bars) as the temperature rises from −100 to 85°F (−73 to 29°C). For higher temperatures one might use ethyl chloride, which goes through the same vapor pressure change as its temperature rises from 100 to 350°F (38 to 177°C).

Overall, the minimum temperature at which vapor fillings can be used is around −40°F (−40°C), while the maximum is about 600°F (315°C). The maximum temperature is limited by the critical point of the fill, while the minimum limit is a consequence of the loss of reading sensitivity, as the vapor pressure changes less per unit temperature change at low temperatures. The nonlinear nature of the vapor-filled thermal systems is generally considered to be a disadvantage, although if a better reading sensitivity toward the top of the scale is required, it can be a desirable feature.

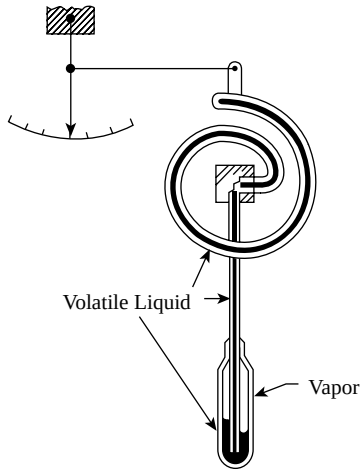

FIG. 4.6h
Class IIA vapor filling.[1]

The speed of response of vapor-filled systems is generally in the range of 1 to 10 s. It is faster than the liquid or mercury fills and as fast as the gas-filled system in most of its configurations, except to Class IID design, which is a little slower.

The overrange limit of the vapor-filled systems is small, because the vapor pressure tends to rise exponentially with temperature. Under some very unique sets of conditions it is possible to obtain higher overage by designing the thermal system so that all liquid will be exhausted at a temperature slightly over the maximum required reading.

Class IIA Systems In a thermal system, which is filled with a liquid that is in equilibrium with its own vapors, the liquid will always situate itself at the cold end of the system and the vapor at the hot end. As shown in Figure 4.6h, in the Class IIA thermal system, the bulb is mostly filled with vapors, while the capillary and the readout instrument are liquid-filled. This type of system can be used only if the temperature at the bulb is *always* above the ambient temperature around the readout instrument. As the process temperature rises, more liquid is vaporized, which increases the vapor pressure in the bulb and in the Bourdon tube of the readout instrument. In this system, the changes in ambient temperature around the capillary will change the volume of the filling fluid and will necessitate using the bulb as a thermal expansion chamber. Consequently, the longer the capillary tubing, the larger the required bulb volume becomes. This tends to limit the maximum capillary length to about 75 ft (23 m).

Class IIB Systems As shown in Figure 4.6i, in a Class IIB thermal system, all the filling liquid is in the bulb, while the rest of the system is vapor-filled. This type of configuration can be used only if the temperature at the bulb is always

© 2003 by Béla Lipták

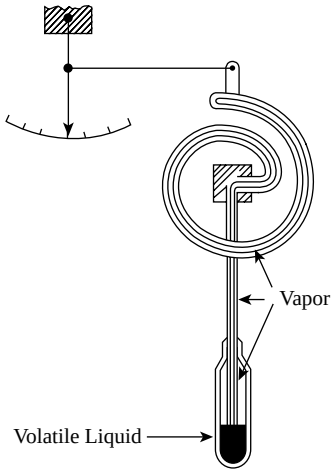

FIG. 4.6i
Class IIB-type vapor filling.[1]

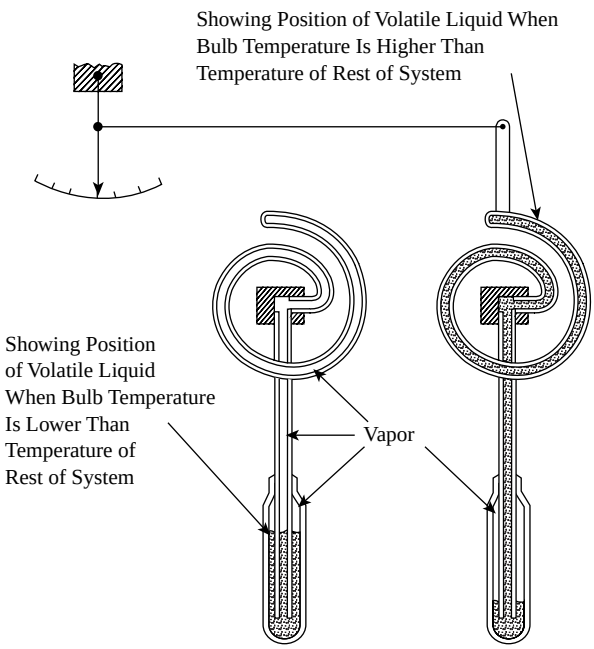

FIG. 4.6j
Class IIC system.

lower than the ambient temperature around the capillary or at the readout device. If this were not the case, the liquid would start boiling in the bulb and recondensing in the Bourdon tube. This transfer of liquid cannot be completed because there is not enough liquid to fill the Bourdon tube and the capillary; while the transfer is taking place, the temperature readings are meaningless. The Class IIB system requires the smallest of the vapor-filled bulbs as it does not have to act as a thermal expansion chamber.

Class IIC Systems Figure 4.6j illustrates the Class IIC thermal system, which is capable of operating as a Class IIA (right) or a Class IIB (left), because its bulb is large enough

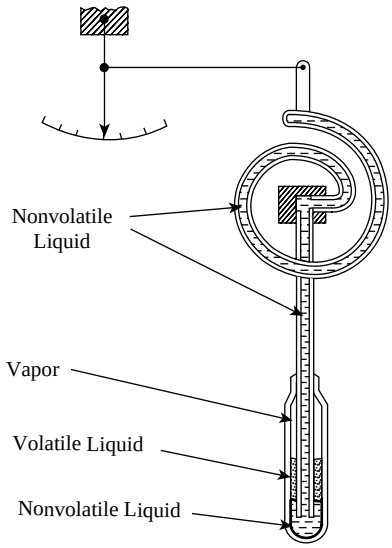

FIG. 4.6k
Class IID system.

to accept all the liquid filling from the Bourdon tube and capillary. This obviously means that the bulb required for this design is larger than for either of the two previously described systems. This design can be used when the process temperature is either above or below the ambient, but *it cannot be used when it might cross the ambient temperature*. This is because it takes some time for the filling liquid to transfer itself to the cold end of the thermal system and to settle down after the liquid/vapor interface has been reversed.

Class IID Systems In the Class IID system there are two filling liquids: one is volatile and is always situated in the bulb, while the other is nonvolatile and fills the Bourdon tube, capillary, and part of the bulb (Figure 4.6k). The purpose of the nonvolatile liquid is only to transmit the vapor pressure at the volatile liquid/vapor interface, which is always confined within the bulb. In this design the process temperature can be anything, including the crossing of the ambient. This configuration requires an even larger bulb than that needed by the Class IIA design.

Class III: Gas-Filled Systems

The operating principle for gas-filled systems is that in a perfect gas confined to a constant volume the pressure is proportional to the absolute temperature. The gas is not perfect and not all at the same temperature nor is the volume constant. However, variances are small enough so that measurement of pressure can be used to indicate temperature.

Nitrogen is the favorite fill for a Class III system because it is inert and inexpensive. It does react somewhat with the steel bulb material at temperatures exceeding 800°F (427°C), and it does act less like a perfect gas at extremely low temperatures. Under these conditions helium should be used. Different ranges are obtained by selecting the correct filling pressure.

© 2003 by Béla Lipták

In general, bulbs should be as large as practical to lessen the influence of temperature variations along the capillary. One way of avoiding long capillaries is to terminate a short capillary at a small diaphragm chamber. The force due to gas pressure on the diaphragm causes it to compress the spring. This motion is amplified and used to regulate another pressure that is transmitted to the spiral. This arrangement, though more expensive, permits much smaller bulbs than could otherwise be used.

Gas-filled systems approximate Charles's law (absolute pressure of a confined gas is proportional to its absolute temperature) by keeping the bulb volume relatively large compared to the rest of the system. Class III systems are primarily used for low and high temperatures. On the low side they are limited by the critical temperatures of the filling gas (usually nitrogen or helium), corresponding to −450°F (−268°C), and on the high side by the temperature limits on the bulb materials, usually corresponding to −1400°F (760°C). The maximum span can be 1200°F (667°C), and is limited only by nonlinearities due to mass flow from the bulb. The minimum span is limited by the pressure at which the Bourdon tube becomes overstressed (usually designed for 400 PSIG, or 28 bars). Therefore, the minimum span with conventional systems is about 400°F (222°C), while with helically wound thin-tube bulbs it can reduced to 120°F (67°C) or even less.

The speed of response of gas-filled systems is usually good. The time constant is only 1 and 4 s because the ratio between bulb mass and surface area tends to be favorable. Class III filling usually can provide 150 to 300% overrange protection, as the maximum temperature is limited only by the permissible pressure and temperature ratings of the bulb. The gas-filled bulb is ideal for measuring the average temperature over large areas, such as in dryers or ovens. This is the case because the bulb volume is not critical and capillary-type bulbs (Figure 4.6f) can cover large areas.

Class V: Mercury-Filled Systems

Mercury is a liquid and in this respect Class V systems are similar to Class I. The two are separated because of the unique characteristics of mercury and its importance as a temperature-measuring medium. Mercury provides rapid response, accuracy, and plenty of power for operating control elements. Pressures within the working system are relatively high—as much as 1200 PSIG (83 bars) for the higher temperatures, dropping to 400 PSIG (28 bars) at the low-temperature end of the range. This high pressure cuts down on any head effect error (difference in elevation between bulb and measuring instrument).

Mercury-filled systems can detect temperatures between the freezing and the boiling points of mercury, or from −40 to 1200°F (−40 to 649°C). Mercury filling also provides the widest range of spans, from 50 to 1200°F (28 to 667°C). The speed of response of mercury-filled systems is faster than that of the liquid-filled ones but slower than that of gas or vapor systems. The Class V systems can have an overrange protection of at least 100%.

AMBIENT-TEMPERATURE COMPENSATION

The measured variable in a filled thermometer is the total internal pressure. This pressure is the result of two factors: the temperature around the bulb and the ambient temperature around the rest of the system. The purpose of the installation is to measure the process temperature around the bulb, and therefore it is desirable to eliminate the effects of ambient-temperature variations on the total reading. The error introduced by ambient-temperature variations is different for the different types of fills, and it also increases as the bulb or span gets smaller or as the capillary length is increased.

When the ambient temperature effects are compensated for in both the capillary and in the readout instrument, the design is called fully compensated. Full compensation is designated by the letter *A* being added to the Class designation number I, III, or V. When the case and the capillary are at the same ambient temperature and the length of the capillary is relatively short, it might be sufficient to leave the capillary portion uncompensated and provide case compensation only. When a Class I, Class III, or Class V system is case-compensated, the letter *B* is added to the designation.

Class II (vapor-filled) systems do not need any compensation because the liquid/vapor interface is always within the bulb. In the case of Class IIA fillings, it is important to keep all sections of the capillary at a temperature which is *below* that at the bulb. Otherwise, the fill fluid could vaporize in the capillary and introduce substantial errors.

Figure 4.6l describes a method of fully compensating Class I, Class III, or Class V systems. Here, the spiral pressure sensor and the capillary are both duplicated. The compensating capillary is closed, and its length is the same as the active capillary without the bulb. The two capillaries are run parallel to each other and the two Bourdon spirals are connected in such a way as to cancel the ambient effects.

In the case of mercury-filled Class V systems, full compensation can be provided without the expense of duplicating most of the thermal system. This cost-saving approach is

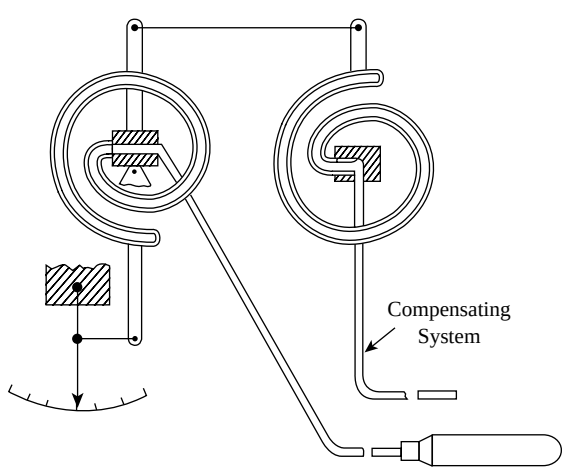

FIG. 4.6l
Full compensation.

© 2003 by Béla Lipták

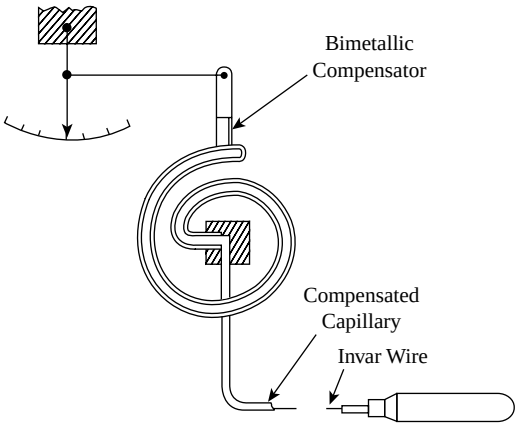

FIG. 4.6m
Class V full compensation with internal wire.

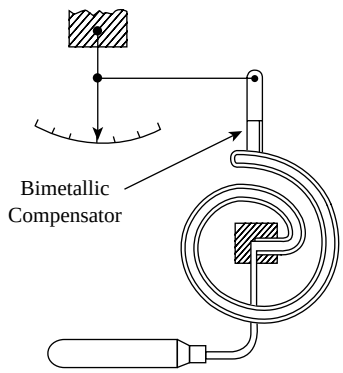

FIG. 4.6n
Case compensation.

illustrated in Figure 4.6m where an Invar wire is inserted inside the single active capillary. Invar is a nickel alloy that has a low coefficient of thermal expansion. Therefore it is possible to select the diameters of the Invar wire and of the capillary in such a manner that an increase in ambient temperature will increase the annular space between the wire and the capillary by just about the same amount as the volumetric expansion of mercury. Therefore, a change in ambient temperature around the capillary does not change the pressure inside the thermal system.

When both the capillary and the case are at the same ambient temperature and the capillary volume is very small relative to the total volume of the system, it is possible to leave the capillary uncompensated and limit the compensation to the case. Case compensation (Class IB, Class IIIB, or Class VB) can be achieved by the addition of a bimetallic spring that generates a force nearly equal to the one caused by the changes in ambient temperature (Figure 4.6n). Because the volume of the Bourdon spiral varies as the internal pressure changes with the measured temperature, the case compensation provided by the bimetallic spring is effective at only one bulb temperature. The bimetallic spring is usually set at midrange, resulting in under-compensation at the top and overcompensation in the bottom half of the range.

Uncompensated operation (Figure 4.6g) is possible with liquid-filled Class I systems when the capillary is very short and with all types of Class II vapor-filled systems. Class III and Class V units must always be compensated. In gas-filled Class III systems, the capillary error rises rapidly with bulb temperature and can be reduced by increasing bulb volume and/or span.

EFFECTS OF BULB ELEVATION

In a filled system, a pressure gauge is used to measure temperature. If the thermal bulb is above the readout instrument, the hydrostatic head of the filling fluid will be added to the total pressure at the spiral Bourdon element. If the bulb is below the case, the hydrostatic head will be subtracted from the total pressure. Therefore, when the bulb is high the thermometer will have a positive error; when it is low, it will have a negative error. The relative size of the error is a function of the size of the hydrostatic head relative to the total pressure.

In the case of liquid- or mercury-filled systems (Class I and Class V), the hydrostatic head caused by the elevation difference between the case and the bulb is a constant and can be zeroed out. Depending on whether the bulb is above or below the case, the hydrostatic head must be subtracted or added at the readout Bourdon tube. This is done with suppression or elevation springs, respectively. The amount of elevation or suppression that is available is not unlimited. Due to the high density of mercury in the Class V systems, the hydrostatic head due to bulb elevation is much greater than with other fillings. Therefore, with mercury-filled systems the maximum elevation difference that can be tolerated is about 30 ft (9 m). Needless to say, if the readout of the bulb is moved, the system must be rezeroed.

In the case of Class I and Class V systems, if the bulb is above the case, the manufacturer must also pressurize the filling liquid by something more than the hydrostatic head in order to make sure that the pressure in the bulb does not drop to zero. This increase in the initial filling pressure reduces the overrange capability of the system.

For Class IIA, Class IIB, and Class IID vapor-filled systems, correction of the elevation error is similar to correction for Class I and Class V, using elevation or suppression to compensate for the hydrostatic heads and rezero the system. In the case of Class IIC systems the height of the liquid column in the capillary varies with temperature and therefore cannot be zeroed out as a fixed quantity. Consequently, Class IIC systems *should not be used* when the case and bulb are at different elevations.

In the case of Class III gas filling, the density of the gas (and therefore its hydrostatic head) is too small to cause any errors. No correction is needed to protect against bulb elevation errors.

© 2003 by Béla Lipták

BAROMETRIC ERRORS

The Bourdon spiral is a differential pressure sensor. Its deflection is a function of the difference between the pressure of the filling fluid on the inside and the atmospheric pressure on the outside. Because the atmospheric pressure is not a constant, its changes can also result in readout errors. The barometric pressure can change by about 0.5 PSIG (25 mmHg). This may or may not be large enough to introduce an error, depending on the filling pressure. The pressure in the readout spiral varies with the type of filling fluid. In Class I and Class V systems it is high enough to make the barometric effect insignificant.

Class II vapor-filled systems are generally designed for a minimum of 100 PSIG (6.9 bars) pressure change across their span, and the barometric effect can result in a 0.5% error. Class III gas-filled systems are usually designed to produce a 400 PSIG (28 bars) pressure change across their ranges. Therefore the barometric effect can result in an error of about 0.1%.

CONCLUSIONS

The filled systems are superior to bimetallic elements but are generally inferior to electronic thermometers. Their advantages include being rugged, simple, self-contained, inexpensive, easily maintained construction, and having acceptable sensitivity and accuracy without the need for auxiliary power sources. They are inherently explosion-proof and can operate displays or records at some distance from the measurement using only head-wound spring drives.

Their disadvantages include the bulky bulbs that are space-consuming and result in a relatively slow speed of response (about 20+ seconds with a well), an inability to provide narrow spans, and a limitation on the distance between bulb and readout (usually under 200 ft, or 60 m). Relatively difficult maintenance of the pressurized thermal elements, which is usually done at the factory, is also a disadvantage. Filled systems are not suited for high-temperature measurement and can be easily misapplied if the user is not familiar with the unique characteristics of each system.

Reference

1. Nelson, R.C., "Temperature Measurement by Filled System," *Instruments and Control Systems*, May 1961.

Bibliography

Adler, C.B., "Reliability Aspects of Temperature Measurement," Instrumentation, Systems, and Automation Society Conference, Chicago, 2001.

ANS/FCI 70-1, "Standard Terminology and Definition for Filled Thermal Systems for Remote Sensing Temperature Regulators," 1993.

Bluestein, I., "Understanding Contact Temperature Sensors," *Sensors*, October 2001.

"Filled-Systems Thermometers," *Measurements and Control*, September 1992.

Hashemian, H.M. et al., "Assuring Accurate Temperature Measurement," *InTech*, October 1989.

Hormuth, G.A., "Ways to Measure Temperature," *Control Engineering*, Reprint No. 948, 1971.

Magison, E., "Temperature Measurement," *InTech*, November 2001.

Peterson, W., "Choosing the Right Temperature Transmitter," *InTech*, April 1991.

Plumb, H.H., "Temperature: Its Measure and Control in Science and Industry," Vol. 4, 5th Symposium on Temperature, National Bureau of Standards, American Institute of Physics, Instrumentation, Systems, and Automation Society, Pittsburgh, PA, 1972.

Stringer, L.J., "Mercury-in-Glass Thermometer Calibration in the Low Acid Canned Food Industry," Instrumentation, Systems, and Automation Society 1994, *Advances in Instrumentation & Control*, Vol. 49, Pt. 2, October 1994.

When, S., "Liquid-in-Glass Thermometers, Still Well and Indicating," Paper #91–0308, Instrumentation, Systems, and Automation Society Conference, Toronto, 1991.

© 2003 by Béla Lipták

4.7 Integrated Circuitry Transistors and Diodes

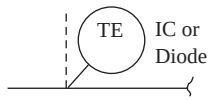

Flow Sheet Symbol

B. G. LIPTÁK (1995, 2003)

Applications:	Because of their low accuracy, integrated circuitry sensors are used in heating, ventilation, and air conditioning (HVAC) type services and to detect hot or cold spots in piping. IC sensors are most often used in near-ambient temperature measurement; germanium diodes are often used in extreme cryogenic applications, and silicon diodes are used from –60 to 300°F (–51 to 149°C).
Ranges:	Integrated circuitry sensors, from –65 to 300°F (–54 to 149°C); silicon diodes, from –60 to 300°F (–51 to 149°C); germanium diodes, from –420 to 110°F (–251 to 43°C). Some diodes can cover the range of 1.4 to 475°F (–271.8 to 202°C).
Outputs:	Some integrated circuitry sensors generate a linear output with a slope of 1 μA/°C; others produce an output of 10 mV/°C.
Linearity:	1% of range
Inaccuracy:	For integrated circuitry sensors the error can range from 1 to 9°F (0.5 to 5°C) with sensitivities on narrow spans approaching 0.1°F (0.06°C). For calibrated diodes the error is 0.2°F (0.1°C) for temperatures above ambient and 0.2% of range below that. Some calibrated diodes are accurate within 0.05°C (0.1°F) between 2 to 305°K (–271 to 32°C).
Costs:	The basic integrated circuitry transistor elements can cost less than $10. Uncalibrated diode sensor costs range from $75 to $400; calibration can cost an additional $200 to $300. A calibrated diode with packaging and mounting for cryogenic service costs $600. Indicating monitor readouts for diode elements cost about $800.
Partial List of Suppliers:	Analog Devices Inc. (www.analog.com) Doric Scientific (www.doric-vas.com) Dynalco Controls (www.dynalco.com) Elan Technical Corp. (www.elan.com) Lake Shore Cryotronics Inc. (www.lakeshore.com) Motorola Semiconductor Products (www. mot-sps.com) National Semiconductor (www.national.com) Omega Engineering Inc. (www.omega.com) Onicon Inc. (www.onicon.com) OPTO 22 (www.opto22.com) Raychem Corp. (www.raychem.com) (multipoint IC tape) S-Products Inc. (www.s-products.com) Syscon International Inc. (www.syscon-intl.com) Wahl Instruments Inc. (www.testandmeasurement.com) Wilkerson Instrument Co. (www.wici.com) Yokogawa Corp. of America (www.yca.com)

Diodes are two-terminal electronic (usually semiconductor) devices that permit current flow predominantly in only one direction. Transistors are three-terminal, solid state electronic devices. They are usually made of silicone, gallium-arsenide, or germanium and used for amplification and switching in integrated circuits.

INTRODUCTION

Diodes and integrated circuitry (IC) transistors have been available as temperature sensors for several decades. The silicon (and germanium) transistors are small and inexpensive, but before they can be used as part of an industrial system (such as an intelligent thermostat), they need to be packaged.

© 2003 by Béla Lipták

One of the first applications of the IC transistor was to provide cold junction compensation for thermocouple (TC) circuits. They are also used in multipoint temperature-sensing cables and in handheld portable temperature monitors. Today both the diode and the IC transistor sensors are available as fully packaged, off-the-shelf units; some of them are also integrated with microprocessors, resulting in a so-called smart sensor. Diodes and transistors can both provide sensitivities approaching 0.1°F (0.06°C) on narrow span applications, but in the case of the diodes calibration is needed to achieve that level of sensitivity.

INTEGRATED CIRCUIT TEMPERATURE SENSORS

Transistors are sensitive to temperature variations. It has been found that if two identical transistors are operated at a constant ratio of collector current densities, then the difference in their base-emitter voltages will be directly proportional to absolute temperature. Therefore, as temperature decreases the base bias must be increased to maintain the collector current constant. The base bias voltage is usually converted to a current by a low-temperature coefficient thin film resistor.

The temperature-proportional characteristic is what allows IC transistors to produce output signals that are proportional to absolute temperature (Figure 4.7a). The IC temperature sensors are available in both voltage and current output configurations. The current output units are usually set for a 1-μA output change per degree Kelvin (Celsius), while the voltage output configuration generates 10 mV per degree Kelvin.

If a digital voltmeter is used as the readout, the current output is detected as the voltage drop through a 10,000-Ω resistor (Figure 4.7b). The temperature-proportional characteristics of IC sensors are highly linear and in the range of –67 to 302°F (–55 to 150°C). It is superior to all electronic sensors, including resistance temperature detectors.

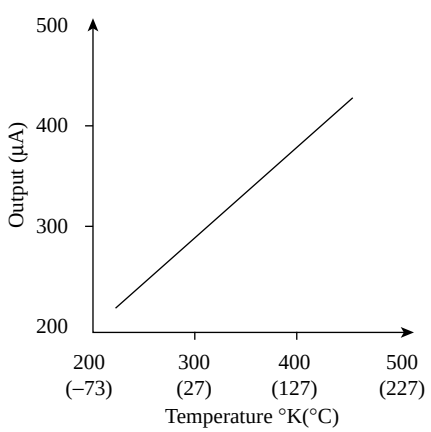

FIG. 4.7a
The temperature-proportional characteristics of the silicone transistor. (Courtesy of Analog Devices Inc.)

Because they produce an analog voltage that is proportional to temperature, IC transistors have been used for some time for cold junction compensation in TC circuits. IC sensor modules have also been packaged in flat cables, where they are attached to the cable at regular (several feet) intervals. The cables can be as long as 10,000 ft (3,050 m) and can have as many as 1,000 sensing modules.

These cables are an economical way of detecting pipe surface temperatures or cold or hot spots. IC sensors are also being used in the heating, ventilation, and air conditioning (HVAC) industry and in other applications where their low cost and strong linear output outweighs their low accuracy and limited range. Other disadvantages of IC sensors include that they require an external power source (4 to 30 V) and that they are fragile and subject to errors due to self heating.

DIODE-TYPE TEMPERATURE SENSORS

Diodes are highly sensitive and linear temperature sensors. Silicone and germanium diode temperature elements are available from –458 to 395°F (–272 to 202°C). They are accurate to 0.2°F (0.1°C) for temperatures that are above ambient and to 0.2% of their full scale range below that. Figure 4.7c depicts the diode-based thermometer circuits of a silicone diode with a 1 mA constant current source, and Figure 4.7d shows the circuits of a germanium diode with a 6-V power supply.

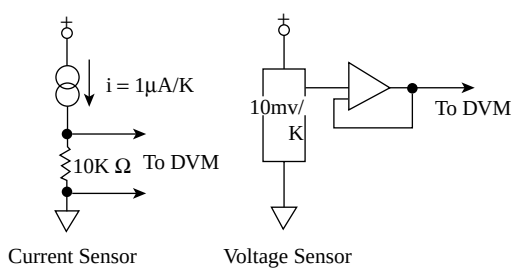

FIG. 4.7b
Current and voltage output type IC transistors.

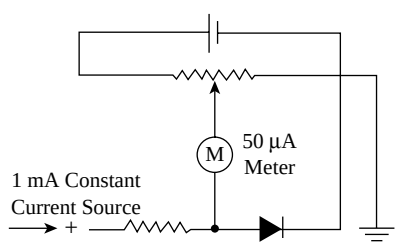

FIG. 4.7c
Simple silicon diode thermometer circuit.

© 2003 by Béla Lipták

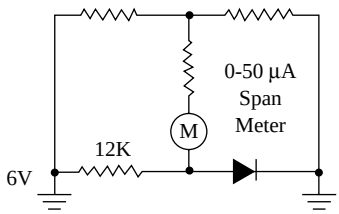

FIG. 4.7d
Germanium diode thermometer circuit.

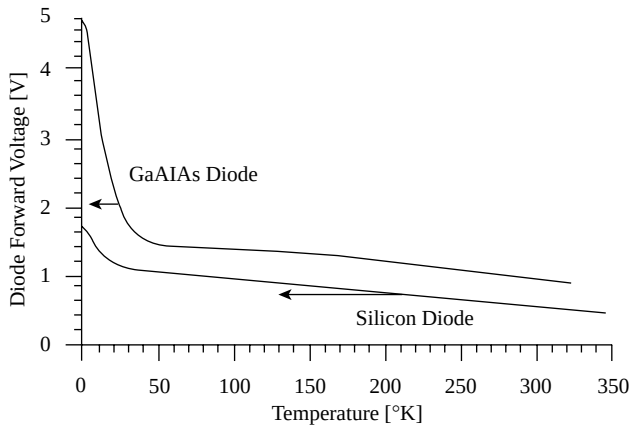

FIG. 4.7e
Characteristics of silicone and gallium-aluminum-arsenide diodes.[1]

The current through the silicon diode thermometer readout could be anywhere from 10 μA to 10 mA, but because higher currents result in higher errors due to self-heating, the currents are usually kept between 100 and 500 μA. The meters used with germanium diodes usually have a range of 0 to 50 μA. Because of the low source impedances, a simple microampere indicating meter can be used.

This sensor can also be used to detect small temperature differences. The main advantages of the diode-type sensors are their high accuracy, particularly at cryogenic temperatures; small size; low cost; and good linearity (Figure 4.7e). The diodes are small enough for most applications, but where sensor size is a problem, microdiodes can be used. One of the disadvantages is that the variations between diodes require a calibration procedure for absolute accuracy, which also increases their costs.

Reference

1. Courts, S.S. et al., "Cryogenic Thermometry: An Overview," in *Applications of Cryogenic Technology*, Vol. 10, Kelley, J.P., Ed., New York: Plenum Press, 1991.

Bibliography

Adler, C.B., "Reliability Aspects of Temperature Measurement," Instrumentation, Systems, and Automation Society Conference, Chicago, 2001.
Bluestein, I., "Understanding Contact Temperature Sensors," *Sensors*, October 2001.
Courts, S.S. et al., "Cryogenic Thermometry: An Overview," American Physical Society Conference, 1991.
Fraden, J., *Handbook of Modern Sensors*, 2nd ed., Heidelberg: Springer-Verlag, 1997.
Hage, J., "Smart Temperature Transmitter Accents Accuracy," *Control*, September 1999.
Hewlett-Packard, Application Note 290, "Practical Temperature Measurements," Palo Alto, CA.
"Integrated Circuit and Diode Thermometry," *Measurements and Control*, February 1991.
Johnson, R., "Measuring the Hot, Difficult and Inaccessible," *Control Engineering*, June 2001.
Kelley, J.P., Ed., *Applications of Cryogenic Technology*, Vol. 10, New York: Plenum Press, 1991.
Krause, J.K. and Dodrill, B.C., "Measurement System Induced Errors in Diode Thermometry," *Review of Scientific Instruments*, 57(4), 661–665, 1986.
Krause, J.K. and Swinehart, P.R., "Demystifying Cryogenic Temperature Sensors," *Photonics Spectra*, August 1985, pp. 61–88.
Langan, P.E., "Calibration Ensures Accurate Temperature Measurement," *InTech*, October 1991.
Magison, E., "Temperature Measurement," *InTech*, October 25, 2001.
Michalski, L. et al., *Temperature Measurement*, 2nd ed., London: John Wiley & Sons, 2001.
Peterson, W., "Choosing the Right Temperature," *InTech*, April 1991.
Prentice, G.R., "Seven reasons Why Temperature Transmitters Are Better than Direct Wiring," *Process Heating*, June 1999.
Stockham, R., "Temperature Transmitters Take the Lead Over Direct Wiring," *Control and Instrumentation*, Product Survey Directory, 1999.
Volbrecht, A. and Gordon, W., "Temperature Measurement: Making Sense of it All," *Sensors*, June 1998.
White, G.K., *Experimental Techniques in Low Temperature Physics*, Oxford: Clarendon Press, 1979.

© 2003 by Béla Lipták

4.8 Miscellaneous and Discontinued Sensors

T. J. CLAGGETT, R. W. WORRALL (1969, 1982) **B. G. LIPTÁK** (1995, 2003)
J. E. JAMISON (2003), **REVIEWED BY K. C. SLONEKER**

Pneumatic and Suction Pyrometers	
Applications:	Temperature profiling of boilers and furnaces during commissioning
Length of Probes:	6 to 30 ft (2 to 10 m); the permissible insertion length is a function of the maximum operating temperature.
Inaccuracy:	2% of actual temperature
Response:	98% in 10 to 20 s
Probe:	Stainless steel water-jacketed units with 2 to 3 in. (50 to 75 mm) diameters
Temperature Range:	0 to 2900°F (0 to 1600°C) with thermocouple and 0 to 4500°F (0 to 2500°C) with pneumatic probes
Fan or ejector requirements:	The fan must generate about 20 in. of water column (0.05 bar, or 37 mmHg) vacuum and pull a flow rate of about 40 cfm (2000 lpm) of furnace gas.
Former Supplier:	Land Combustion, a Division of Land Instruments International
Quartz Crystal Thermometry	
Applications:	Temperature and temperature difference measurements, usually in the laboratory
Temperature Range:	–112 to 482°F (–80 to 250°C)
Inaccuracy:	0.135°F (0.075°C) throughout the full range; 0.072°F (0.04°C) for the range of –58 to 302°F (–50 to 150°C). For temperature difference measurement over an 18°F (10°C) span, the error under laboratory conditions is within 0.018°F (0.01°C).
Former Supplier:	Micro Crystal of Switzerland

In this section, several unrelated methods of temperature measurement will be briefly discussed. Some of these are still in the experimental stage, while others have not been exploited commercially because they are not yet competitive with the more common sensors. This fast-changing field is so broad that only select examples will be covered.

SELF-MEASURING DEVICES

Sometimes temperatures can be measured by allowing a material to serve as its own thermometer. This can be done by measuring the pressure of a constant volume of confined gas, because that indicates its mean temperature. The proportional relationship of pressure to temperature is given by the relationship: $pv = nrt$. This relationship can be exploited in industry where fixed volumes of gas may exist and where the pressure is known. A constant volume gas thermometer is precisely this type of device.

Similarly, the resistance of an electric heating coil can be measured and used to define its own temperature, because the resistance changes as a function of temperature.

Actually, any property having a consistent rate of change for a temperature variation will serve to indicate temperature. The frequency of the chirp of crickets on a summer night is an indication of their temperature environment. The rate at which a viscous substance, such as oil drips through a small hole in the bottom of its container, is just as much an

© 2003 by Béla Lipták

indication of its temperature (provided the time-temperature relationship is known) as would be obtained by inserting a glass-stem thermometer into the fluid itself. All of these relationships may be derived by equation, but reasonably accurate measurements can be made from empirical data. These indirect measurement techniques are quite useful for correlating known temperatures. For example, in a fixed volume of gas having a measured temperature, the pressure gauge should read the appropriate pressure for that temperature. Because of the known relationship the parameters can confirm each other.

In addition to such self-measuring devices, there are also many new configurations of older systems. For example, the bimetallic spring can now be used as an optical temperature switch. In this design, the bimetallic element (Section 4.2) is upwardly convex until the temperature is reached. At that point it becomes downwardly convex, which blocks an optical light path. The number of devices that exploit old concepts in new ways is very large, and no attempt will be made here to fully cover them.

ACOUSTIC TIME DOMAIN REFLECTOMETRY

This thermometer operates on the principle that in solids ultrasound pulses travel at speeds, which are a function of the temperature of the solids (Figure 4.8a). The measurement is made by detecting the time needed for the acoustic pulses to travel from the transducer to the impedance demarcation point (which may be the junction between the wire and the wall of the tank) and back to the transducer. This device is in the development stage and shows good potential, although some drift in the measurement has been reported.

Gas temperature can be measured by detecting the time needed for an ultrasonic pulse to travel through a fixed distance in the hot gas (Section 4.15). This type of measurement is useful where conventional techniques may be less suitable, such as nuclear reactor environments. Often referred to as acoustic thermometers (see Section 4.15), these devices can be highly accurate and much consideration has been given to using this apparatus to define the lower end of the temperature scale. Accuracies in the sub-milli-Kelvin range are achievable.

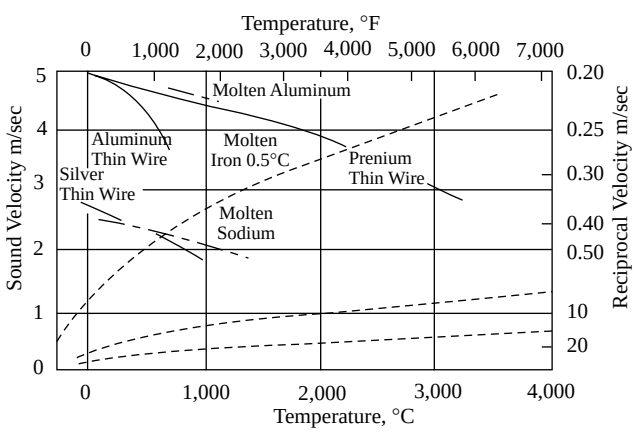

FIG. 4.8a

The velocity of sound is higher in thin wires when they are cold, and it drops as the wires are heated.[2]

CARBON RESISTORS

Commercially available carbon resistors have been used as temperature sensors in the cryogenic temperature area near absolute zero (from about –424°F, or –253°C, downward to below –458°F, or –272°C). One major benefit of the carbon resistor at low temperature is its lower susceptibility to adverse effects caused by a magnetic field. They are somewhat less accurate than competing sensors and do require individual calibration to keep the measurement error under 1%. Carbon resistors may be incorporated into resistor networks to improve linearity in some ranges.

Resistor sizes of 0.1 to 1 W and ambient resistance values up to 150 Ω exhibit a large increase in resistance below –424°F (–253°C). Reproducibility on the order of 0.2% are obtainable when calibrated individually. Small size, low cost, and general availability make their use attractive in cryogenic work.

The influence of stray radio interference and a loss of sensitivity are drawbacks. Variation in the resistors make calibration difficult and generally impose an individual device calibration requirement.

In addition to carbon resistors and conventional resistance temperature detectors (RTDs) (Section 4.10) or thermistors (Section 4.12), there is a variety of special resistors used as temperature sensors. One example consists of a thin nickel film deposited onto an electrically insulating substrate in a reducing atmosphere. The sheet resistance is a function of the heat treating temperature, cycle time, and thickness. The different designs of special temperature-sensitive resistors are too numerous to mention. These systems are engineered for specific applications and lack the widespread applicability required of most temperature measurement systems. They are, however, a very effective method of solving specific measurement problems.

CAPACITANCE CABLE FOR DETECTING HOT SPOTS

A cable consisting of an electrical conductor, a dielectric, and a conductive plastic can be used to detect hot spots. The polymer in the over-temperature locator cable increases its electrical resistance with temperature. Therefore when a hot spot evolves anywhere along the length of the cable, this will result in a drop in capacitance, as measured from one end of the cable. The location of the hot spot can be determined by comparing the measured capacitance from the control end of the cable with the capacitance of the full length of the cable.

© 2003 by Béla Lipták

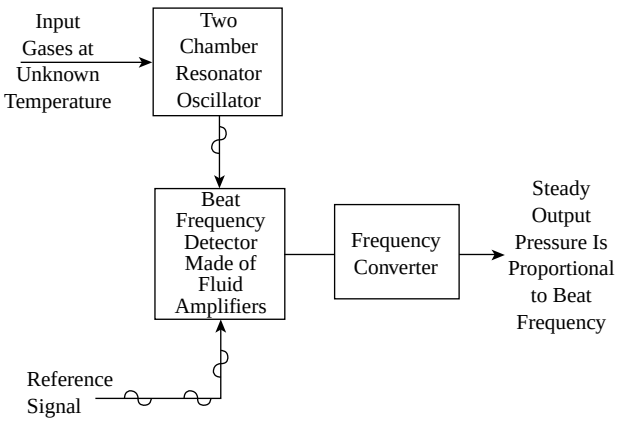

FIG. 4.8b
Fluidic temperature-to-pressure converter.

FLUIDIC SENSORS

The fluidic sensor is a device for converting gas temperatures into gas pressure. Actually, it is a beat-frequency detector system, which contains no moving parts other than the gas.

One type of design is shown in Figure 4.8b. The oscillator is a two-chamber resonator in which the entering gases are split by a knife-edge. The gases that are reflected from one chamber into the other, set up oscillations whose frequency is proportional to the square root of the absolute temperature.

A reference signal input from a temperature-sensitive resonant oscillator is compared with the unknown in a beat-frequency detector made of beam-deflection fluid amplifiers. The frequency of its output is the beat frequency of the combined reference and oscillator signals. The components in the frequency converter create a steady pressure proportional to the beat frequency. Accuracies of about 2% and temperatures up to 2000°F (1093°C) are claimed for the system.

JOHNSON NOISE THERMOMETER

Investigation into noise thermometry has been evolving over the last few decades. All resistive devices produce a random noise power level based upon their absolute temperature. In most cases this noise is considered interference and electronic circuit designers work to reduce it. Equation 4.8(1) gives a general relationship that relates temperature to the V_{RMS} value:

$$V_{RMS} = \sqrt{4KT \int_{f2}^{f1} R\,df} \qquad \textbf{4.8(1)}$$

For very high temperature measurements, tungsten rhenium thermocouples viewed in terms of a resistive device will provide a corresponding temperature that is determined using the Johnson noise measurement technique. It is interesting that much of the current research in this area is centered around cryogenic temperatures. Inaccuracies of 0.001% may be achievable in the range from 84 to 430 K. This type of instrument and sensor is collectively referred to as Johnson noise thermometers.

LIQUID CRYSTALS

Used in nondestructive testing for surface temperature measurements, liquid crystals undergo a series of color changes as temperature varies. They are organic compounds that are physically liquid, but exhibit optical properties that are similar to those of a crystalline solid.

A number of solutions are available, from the minimum temperature of about 68°F (20°C) to a maximum of approximately 340°F (170°C). The solutions are packaged in kit form for various ranges within these limits. Mixtures are made covering spans as narrow as 4°F (2.2°C) within the selected range.

Temperature is read by comparing the color exhibited when a thin coating is subjected to the conditions under question to a standard reference color. Response speed is less than 1 s. The indication is continuous and reversible. Cost is low. Disadvantages include manual preparation and limited range, in addition to lack of automatic readout.

Liquid crystals have also been used in fiber-optic thermometers. A pellet of liquid crystal is inserted at the tip of an optical fiber. As light at different wavelengths is sent through the fiber, the reflection peaks from the liquid crystal are related to temperature.

PARAMAGNETIC SALTS

Magnetic thermometry has been developed chiefly to measure temperatures near absolute zero (below –458°F, or –272°C). The temperatures are obtained by adiabatic demagnetization of a paramagnetic salt. An isothermal magnetization at the lowest attainable liquid helium temperature (about –458°F, or –272°C) followed by an adiabatic demagnetization is used. The entropy is decreased, with a simultaneous heat flow from the sample, when the magnetic ions are oriented parallel to the field. During subsequent adiabatic demagnetization the entropy of the salt remains constant, if demagnetization is reversible, and temperature decreases.

To obtain the temperature, some temperature-dependent quality of the salt under investigation is used, such as the magnetic susceptibility.

If a sphere or rotational ellipsoid of an isotropic paramagnetic salt is located in the homogeneous part of the magnetic field of a coil of a mutual inductance or a self-inductance, the inductance of the coil is a function of the temperature. Inductance can be measured with an AC bridge (as shown in

© 2003 by Béla Lipták

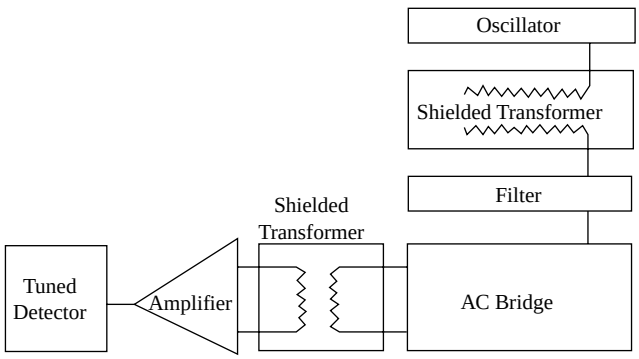

FIG. 4.8c
Circuitry for temperature measurement by paramagnetic salts.

Figure 4.8c) whose balance is independent of frequency. A galvanometer can be used for detection. Effective shielding is a requirement.

In a paramagnetic salt with a coil surrounding it, self-inductance is related to temperature. An Anderson AC bridge has been used to measure magnetic temperature in such a situation. The relationship between self-inductance and susceptibility of a salt has been found to be linear when the ellipsoidal or spherical salt piece is placed in the homogeneous part of the measuring field.

Accuracy of the magnetic method has been estimated on the order of 0.001°F (0.00056°C). The method is the best available for measurements near absolute zero.

SPECTROSCOPIC TEMPERATURE MEASUREMENT

Spectroscopic methods are often used to measure the temperature of hot gases. They are, in fact, the only possible way to measure the surface temperature of stars.

The spectroscope in its simplest form is the familiar triangular glass prism, which breaks up light from a hot object into its constituent colors (its spectrum). The chemical composition of glowing gas is determined from the pattern of dark (Fraunhofer) lines that appear across the spectrum.

Many procedures for temperature determination from the spectrum have been developed, such as measurement of brightness and actual color, reversal temperatures, population temperature estimates, measurements made of spectral line shifts in ionized gases, and many others. These are all laboratory techniques seldom employed industrially because of their complexity and relatively high costs. For further information on this subject, refer to Chapter 56, "Spectroscopic Methods of Temperature Measurement," in *Temperature: Its Measurement and Control in Science and Industry*, Vol. III, Pt. I.

THERMOGRAPHY

The strong temperature dependence of the brightness of certain luminescent materials may be converted into a pattern of color that can be recorded photographically. A thin layer of this material is placed on the surface to be investigated and is excited with ultraviolet (UV) radiation in a darkened room. The brightness of the coating is compared to the brightness of the same coating at a known temperature as an indication of the unknown temperature.

The sensitivity of the phosphors used gives a 10% brightness change per °F and this can be picked up with a relatively crude system of photometry. Temperature range for this type of measurement is from 32 to about 750°F (0 to about 400°C).

FIBER BRAGG GRATING TEMPERATURE SENSORS

The Fiber Bragg Grating (FBG) offers a promising technology for future temperature-sensing applications as well as possible strain sensor applications. Research has been done indicating considerable promise for FBG to be a viable temperature measurement technology.

In this optical technology, Bragg wavelength shifts are measured to determine the temperature of a specifically treated section of the fiber core material. FBG technology can be measured in a distributed manner by wavelength division multiplexing. This would make it suitable for petrochemical plant applications in hazardous, classified locations.

An FBG is formed by exposure to a fringe of UV light. Only the specified Bragg wavelength as related to its grating period is reflected from broadband-source input light. As a temperature change occurs, a Bragg wavelength shift occurs that can be measured and can correlate back to the measured temperature. The measurement hardware can be completely placed within a conventional thermowell just like a thermocouple and its sheathing would.

DISCONTINUED TEMPERATURE SENSORS

While the temperature sensors described in these paragraphs are not marketed at this time, they are still in use. Whether they will or will not be manufactured in the future is unknown. For sake of completeness, they are described here.

Pneumatic and Suction Pyrometers

The measurement of hot gas temperature of combustion processes does not give accurate results with conventional thermometers because of interference from the radiated heat of the surroundings. When a conventional thermocouple (TC) is used, the amount of interference is a function of the relative values of the radiant heat transfer coefficient of the surroundings and the convective heat transfer coefficient of the gas. When a standard TC is used in a cold furnace, the resulting error can be several hundred degrees. Pneumatic and suction pyrometers have been developed in order to reduce this error.

Suction Pyrometers The suction pyrometer consists of a sheathed TC (sheathed against chemical attack) located inside a radiation shield at the tip of a suction pipe (Figure 4.8d).

© 2003 by Béla Lipták

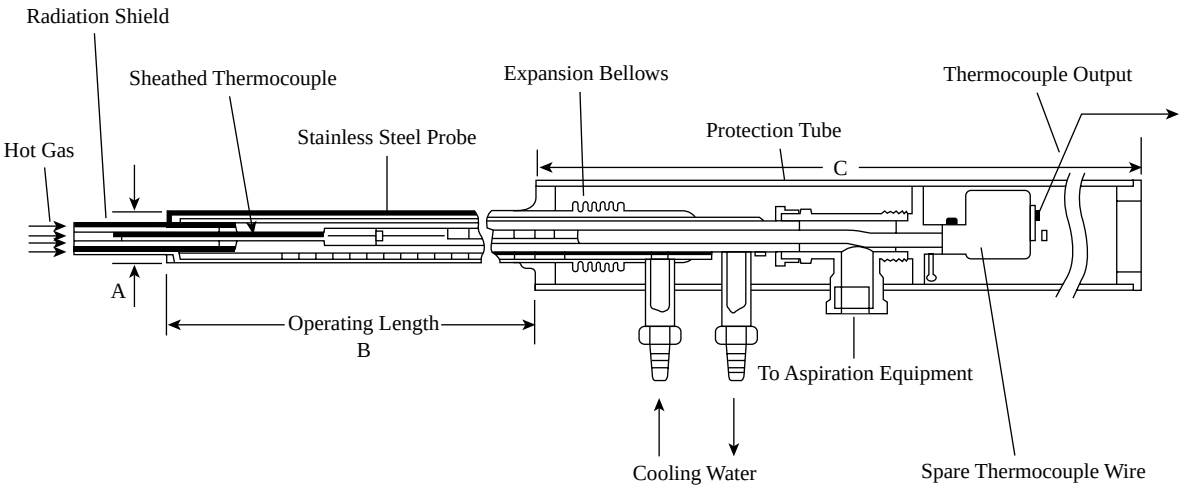

FIG. 4.8d
Sheathed thermocouple detects the hot gas temperature in an aspirating suction pyrometer. (Courtesy of Land Combustion, a Division of Land Instruments International Inc.)

The combustion gases are sucked through the shield and over the TC at high velocity by aspirating equipment. The efficiency of this aspirating TC is a function of the quality of the radiation shield and of the suction flow rate. If, for example, a suction pyrometer has a 100°C error without suction and a 10°C error when the suction flow is on, it is said to have an efficiency of 90%.

The suction pyrometer probe is usually made of stainless steel and is water-cooled. These probes are designed for high gas velocities of 500 fps (152 mps). At such velocities the radiation shields usually produce better than 90% pyrometer efficiencies. The furnace gases can be pulled out by fans or by air or steam ejectors. The main limitations of this design include plugging of the probe when the combustion products are dusty (as in pulverized coal burners). In addition, they cannot be used in applications where the temperatures exceed 2912°F (1600°C).

Pneumatic Pyrometers The pneumatic probe was invented in 1893 for use in blast furnaces. It is superior to suction pyrometers in that dust in the combustion gases does not plug it as easily and that it can measure very high temperatures, such as in turbojet engines or rockets. This pyrometer can detect higher gas temperatures than can the aspirating TC because the thermometer does not need to reach the gas temperature (Figure 4.8e). The pneumatic probe can handle gases heavily laden with dust because it does not have a radiation shield, which is prone to plug.

The pneumatic pyrometer measures the pressure drop of the hot combustion gases through one restriction at the probe tip and measures their pressure drop again after they have been cooled through an identical restriction (see Figure 4.8e). Because the mass flow rate of the gas is the same across these restrictions, the only reason these two pressure drops are different is because of the change in the gas temperature, which affects its density. The pressure differentials across the hot and cold venturi are inversely proportional to the densities of the hot and cold gas. Therefore they are directly proportional to the absolute temperatures at the hot and cold venturi. As the temperature at the cold venturi (T_c) is measured, the hot gas temperature (T_h) can be calculated by multiplying T_c and a configuration constant K with the ratio of P_h/P_c. Therefore, the absolute temperature of the gas is:

$$T_h = KT_c(P_h/P_c) \qquad \textbf{4.8(2)}$$

Relative to the suction pyrometer, the pneumatic pyrometer requires more utilities and more design attention as almost all units must be uniquely designed.

Quartz Crystal Thermometry

The effect of temperature on the frequency of quartz crystal controlled oscillators has been known since work on this subject been published in 1946. Temperature measurement using quartz thermometers is based on the very linear change that occurs in resonant frequency in response to a change in temperature. Under ideal conditions, this temperature sensitivity is on the order of 0.0005°F (0.0003°C), and temperature deviations on the order of 10^{-6}°F have been measured in the laboratory.

A reference and a sensor oscillator are used. The reference oscillator frequency is selected to provide zero reference beat when the probe is at 32°F (0°C). Sensor oscillators provide a sensitivity of 500 cps/°F and dividers are arranged to obtain a sample period of .01 s. A resolution of 0.2°F (0.1°C) has been obtained with a digital readout (Figure 4.8f). When arranged for differential measurement, gating circuits are added to enable the oscillators to be heterodyned against each other.

In past applications, probes were provided with the quartz crystal hermetically sealed inside a well, formed from a 3/8

© 2003 by Béla Lipták

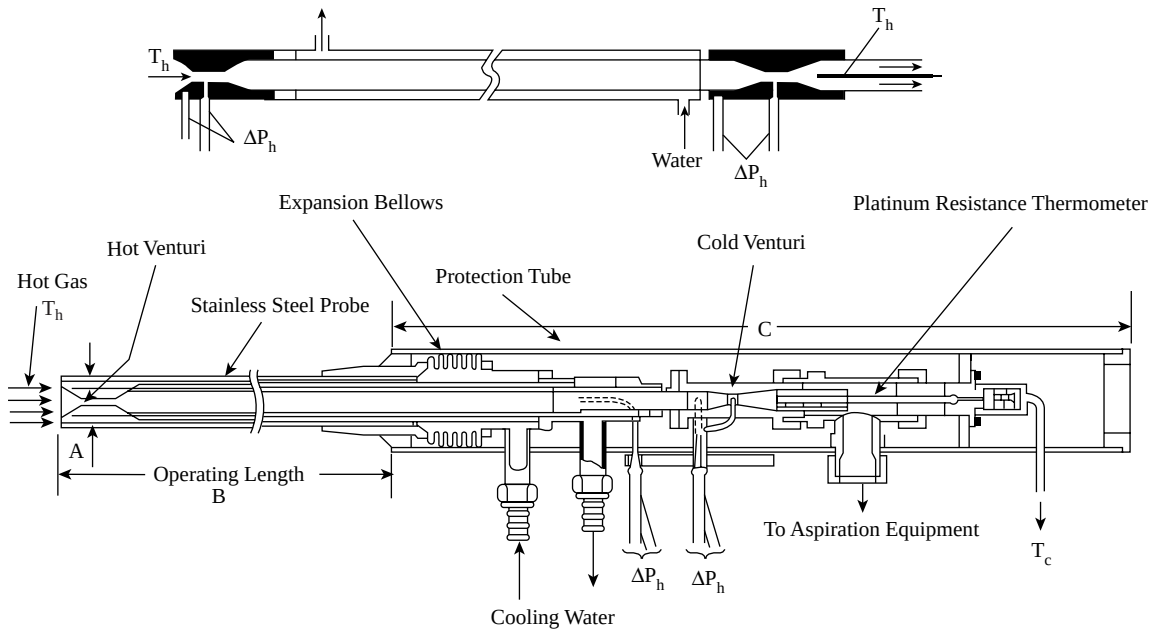

FIG. 4.8e

Pneumatic pyrometer determines hot gas temperature by multiplying cold and temperature (T_c) with the ratio of pressure drops across the hot and cold venturis. (Courtesy of Land Combustion, a Division of Land Instruments International Inc.)

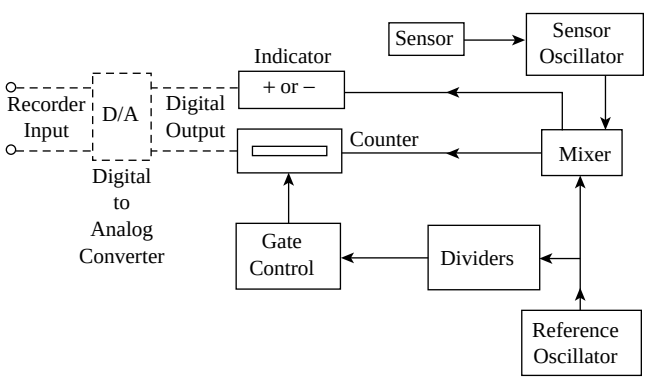

FIG. 4.8f

Quartz thermometer system block diagram.

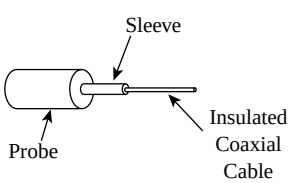

FIG. 4.8g

Quartz crystal sealed in a capsule.

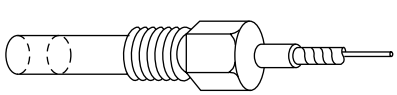

FIG. 4.8h

Quartz crystal in stainless steel well.

in. (9.5 mm) outside diameter stainless steel cylinder (Figures 4.8g and 4.8h). The probes can be used at pressures up to 3000 PSIG (21 MPa) and can stand shocks of 10,000 *g* without changing their calibration.

In a well-stirred water bath, the response time for a step change is 1 s. Long-term stability, for periods of a month or more, is on the order of 0.02°F (0.01°C). Oscillator drift can lower the stability, but, in an environmentally controlled area, this is not much of a problem.

Advantages and Disadvantages The main advantages of quartz crystal thermometry are that:

1. There are no lead resistance or noise problems because the temperature is converted to frequency.
2. It has excellent short-term stability.
3. It has good accuracy.
4. It has a 1-s response time.
5. It has accurate differential measurement.
6. It is rugged—it can withstand shocks without changing calibration.

The disadvantages include that:

1. These units are expensive.
2. Their accuracy is somewhat lower than those of resistance thermometers or thermistors.
3. Their probe size is larger than TC or resistance temperature detector.
4. They are better suited for the laboratory environment.

© 2003 by Béla Lipták

References

1. Plumb, H.H., "Temperature: Its Measure and Control in Science and Industry," Vol. 4, 5th Symposium on Temperature, National Bureau of Standards, American Institute of Physics, Instrumentation, Systems, and Automation Society, Pittsburgh, PA, 1972.
2. Lynnworth, L.C., "Sound Ways to Measure Temperature," *Instrumentation Technology,* April 1969.

Bibliography

Adler, C.B., "Reliability Aspects of Temperature Measurement," Instrumentation, Systems, and Automation Society Conference, 2001.

Allen, M.G., Wang, T.P., and Bediones, D.P., "Recent Advances in Temperature Sensors," Paper #95–080, ISA/95: Advances in Instrumentation & Control, Chicago, October 1995.

Benz, S.P. and Tew, W., "A New Approach to Johnson Noise Thermometry," Fellmuth, B., Ed., National Institute of Standards and Technology Proceedings, TEMPMEKO, Boulder, CO, 2001.

Bidini, G., "A Method for the Thermo-Fluid Dynamic Design of Gas Turbine Total Temperature Probes," Paper #91–0511, Instrumentation, Systems, and Automation Society Conference, Toronto, 1991.

Bliss, P. and Morgan, R.K., "Errors in Temperature Measurement," *Instrumentation Technology,* March 1971.

Bluestein, I., "Understanding Contact Temperature Sensors," *Sensors,* October 2001.

Desmarais, R. and Breuer, J., "How to Select and Use the Right Temperature Sensor," *Sensors,* January 2001.

Fraden, J., *Handbook of Modern Sensors,* 2nd ed., Heidelberg: Springer-Verlag, 1997.

Hage, J., "Smart Temperature Transmitter Accents Accuracy," *Control,* September 1999.

Hashemian, H.M. and Peterson, K.M., "Assuring Accurate Temperature Measurement," *InTech,* October 1989.

Hirayama, N., Sano, Y., and Kuroiwa, S., "Fiber Bragg Grating Temperature Sensor for Practical Use," ISA/99 Tech/Expo,: Advances in Instrumentation & Control: Emerging Technologies–Philadelphia, October 1999.

Hormuth, G.A., "Ways to Measure Temperature," *Control Engineering,* Reprint No. 948, 1971.

Johnson, R., "Measuring the Hot, Difficult, and Inaccessible," *Control Engineering,* June 2001.

Kerin, T.W. and Katz, E.M., "Temperature Measurement in the 1990s," *InTech,* August 1990.

Krigman, A., "Temperature Instrumentations: Recent Patent Activity," *InTech,* August 1983.

Langan, P.E. and Ironside, D.S., "Calibration Ensures Accurate Temperature Measurement," *InTech,* October 1989.

Li, B., Liu, B.Y., Zheng, X.R., Lai, P.T., Wu, Z.H., and Sin, J.K.O., "Ultra-Low Power Thermal Sensor with Silicon-on-Insulator Structure for High-Temperature Applications," Paper #28.4, First IEEE International Conference on Sensors, Orlando, FL, June 2002.

Magison, E., "Selecting the Right Temperature," *InTech,* February 1993.

Magison, E., "Temperature Measurement," *InTech,* October 25, 2001.

Michalski, L. et al., *Temperature Measurement,* 2nd ed., London: John Wiley & Sons, 2001.

Moldover, M.R., "Primary Acoustic Thermometry," Dubbeldam, J.F., Ed., Gaithersburg, MD: National Institute of Standards and Technology, TEMPMEKO, 1999.

Moray, W.W., Dunphy, J.R., and Meltz, G., "Multiplexing Fiber Bragg Grating Sensors," *Applied Optics,* September 1996.

Owen, T., "No Need to Cool Down," *Control,* June 1998.

Peterson, W., "Choosing the Right Temperature Sensor," *InTech,* April 1991.

Plumb, H. H., "Temperature: Its Measure and Control in Science and Industry," Vol. 4, 5th Symposium on Temperature, National Bureau of Standards, American Institute of Physics, Instrumentation, Systems, and Automation Society, Pittsburgh, PA, 1972.

Prentice, G.R., "Seven Reasons Why Temperature Transmitters Are Better than Direct Wiring," *Process Heating,* June 1999.

Sade, S., Eyal, O., and Katzir, A., "Embedded Silver Halide Optical-Fiber Temperature Sensor," Paper #31.2, The First IEEE International Conference on Sensors June 2002.

Schooley, J.F., "State of the Art of the Instrumentation for High Temperature Thermometry," Publication Number ANL-78–7, Argonne National Laboratories' Symposium, Argonne, IL,1977.

Shepard, R.L. et al., "Development of Long Life, High Reliability, Remotely Operated, Johnson Noise Thermometer," Paper #91–0306, Instrumentation, Systems, and Automation Society Conference, Toronto, 1991.

Stockham, R., "Temperature Transmitters Take the Lead Over Direct Wiring," *Control and Instrumentation,* Product Survey Directory, 1999.

Volbrecht, A. and Gordon, W., "Temperature Measurement: Making Sense of it All," *Sensors,* June 1998.

Yoder, J., "Taking the Mystery Out of IR Sensors," *Control,* June 2000.

© 2003 by Béla Lipták

4.9 Radiation and Infrared Pyrometers

T. J. CLAGGETT, R. W. WORRALL (1969, 1982)
B. G. LIPTÁK (1995, 2003)

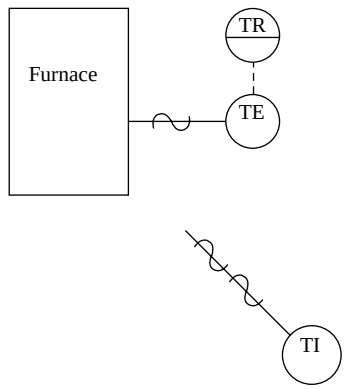

Flow Sheet Symbol

Types: (A) Optical (brightness); (B) Ratio (two-color); (C) Total (wide-band) (D) Narrow-band. Note: Fiber-optic designs are covered in Section 4.5.

Applications: Applications are not limited to noncontact high-temperature processes, such as hot metal working, plastic film processing, and glass manufacturing. Infrared is also used in low-temperature applications. These include infrared photographs of accident victims to locate internal bleeding, aerial photographs to detect pollution of water bodies, the detection of the need for crop irrigation, and many others.

Wavelengths Used (Microns): Inexpensive total radiation detectors operate over the range of 0.7 to 8 μm. To penetrate the intervening atmosphere, the 2.2- to 3.8-μm range is used; for applications involving metals, a narrow band around 2.2; for flames, 4.5; for glass, below 8 μm are typical.

Temperature Ranges: –50°F to 6500°F (–46 to 3600°C) for Spot instruments; 100 to 3500°F (37 to 2000°C) for Line Scanners; 0 to 3500°F (0 to 2000°C) for Thermal Imagers, 1400 to 6300°F (760 to 3500°C) for optical; –40 to 7000°F (–40 to 4000°C) for narrow-band and total radiation pyrometer designs.

Distance and Target Size: Maximum distance (D) to target is about 100 ft (30 m); minimum target diameter (d) is about 0.05 in (1.5 mm). The field of view of the pyrometer is its D/d ratio and varies from 3:1 to 900:1. Single-wavelength units detect average temperature of field of view; dual-wavelength units detect the hottest part of target within the field of view.

Linearity: Nonlinear, most vary with the 4th power of absolute temperature.

Main Sources of Errors: Variations in the emittance of the target and background; aging of radiation source; background interference; lack of focusing or target is too small to fill the view; radiation absorption by dust, smoke, moisture, atmosphere, or by dirt on the windows.

Methods of Focusing: Most units use lenses to focus on the target. (For alternate methods, refer to the fiber-optic designs in Section 4.5.)

Inaccuracy: Generally from 0.05 to 2% of reading with significant variation due to application details. The error when using designs A and B is generally around 1% of full scale (FS), but on narrow spans can be reduced to 0.5% of reading. (C) is 0.5 to 1% FS, and (D) is 0.25 to 2% FS. Under laboratory conditions, the precision can reach 0.1°C (0.2°F).

Costs: The total range of costs is from $500 to $5,500 with thermal imaging systems up to $60,000. Portable general purpose infrared thermometer units start at around $500 and can reach over $3000 in optical (A) designs. Permanently installed general-purpose, two-wire industrial transmitters start at about $1,500. These can be wide- or narrow-band ([C] and [D]) units. Ratio-type transmitters (B) start at around $4,000. The optical

© 2003 by Béla Lipták

(A) transmitters cost over $5,000 and are not widely used. When installing pyrometers on a furnace or on boilers, accessories such as cooling jackets, air purge assemblies, safety shutters, and sighting or target tubes are also needed and can more than double the cost of the pyrometer itself. Additional costs involve testing, maintenance, and periodic calibration. When all costs are added up, the total cost is likely to be higher than that of any other thermometer category.

Partial List of Suppliers:

ABB Inc. Instrumentation (www.abb.com/us/instrumentation)
Accutech (www.savewithaccutech.com)
Advanced Contol Technology Inc.
APT Instruments (www.aptinstruments.com)
Barber-Colman Industrial Instruments (www.barber-colman.com)
Balluff Inc. (www.balluff.com)
Chino Works America Inc. (www.america.com)
CI Systems Inc.
Concept Engineering
Dowty Custom ElectronTechnologies (www.citect.com)
Dickson (www.dicksonweb.com)
Dwyer Instruments (www.dwyer-inst.com)
Ecom Instruments Inc. (www.ecom-ex.com)
Exergen Corp. (www.exergen.com)
Extech Instruments (www.extech.com)
Flir Systems Inc. (www.flir.com)
Flow Research (www.flowresearch.com)
Fluke Corp. (www.fluke.com)
Gaumet Process (www.gaumet.com)
Honeywell Industry Solutions (www.iac.honeywell.com)
Horiba Instruments Inc. (www.nettune.net/horiba.com)
Imaging & Sensing Technology (www.istimaging.com)
Indigo Systems (www.indigosystems.com)
Instrumentation Group (www.instrumentationgroup.com)
Ircon Inc. (www.ircon.com)
Jensen (www.jensentools.com)
Kobold Instruments, Inc. (www.koboldusa.com)
L&J Technologies (www.ljtechnologies.com)
Land Instruments (www.landinst.com)
Lucent Specialty Fiber Technologies (www.lucent.com/ofs/specialtyfiber)
Mikron Instrument Co. (www.mikroninst.com)
Omega/Vanzetti (www.vanzetti.com)
Pyrometer Instrument Co. (www.pyrometer.com)
Raytek Inc. (www.raytek.com)
Rosemount Analytical Inc. (www.processanalytic.com)
Snell Infrared (www.snellinfrared.com)
Tel-Tru Manufacturing Co. (www.teltru.com)
Transcat (www.transcat.com)
Triplett Corp. (www.triplett.com)
TTI (www.ttiglobal.com)
Wahl Instruments Inc. (www.palmerinstruments.com/wahl)
Watlow Infrared (www.watlow.com)
Williamson Corp. (www.williamsonir.com)
Winters Instruments (www.winters.com)
Yokagawa Corp. of America (www.yca.com)
Note: Most popular are Raytek, Ircon, and Exergen.

An infrared (IR) thermometer is a noncontact radiant energy detector. Every object in the world radiates IR energy. The amount of radiant energy emitted is proportional to the temperature of an object. Noncontact thermometers measure the intensity of the radiant energy and produce a signal proportional to the target temperature.

INTRODUCTION

It was only a few hundred years ago that physicists abandoned the view that heat is a substance and accepted that it is a form of energy that is transferable from one material to another by conduction, convection, or radiation. Since that time it

© 2003 by Béla Lipták

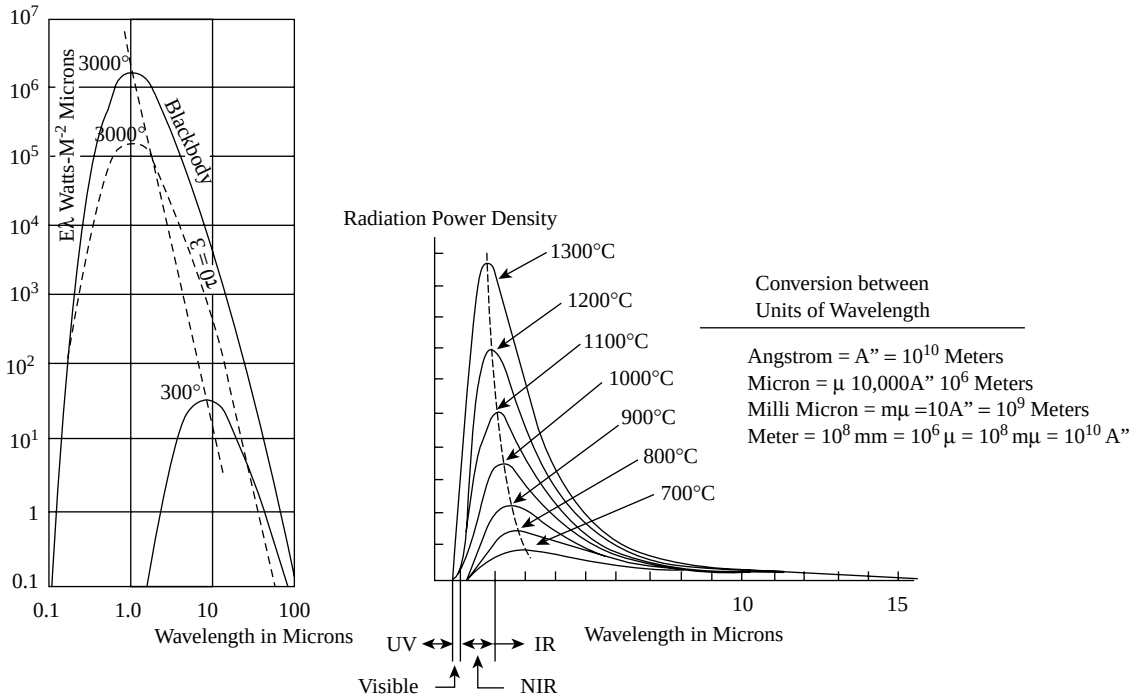

FIG. 4.9a

Blackbody radiation is a function of temperature. Dotted line on the left describes a gray body having an emissivity of 0.1. (See definitions at the end of this Section.)

was discovered that all materials, at all temperatures, down to near absolute zero, radiate electromagenetic energy, which travels at the speed of light (186,000 miles per second). It was also learned that the wavelength at which this radiation occurs depends on the temperature of the material.

The temperature of the material determines both the quantity and the type of energy radiated. As the temperature rises, the wavelength of radiation drops and its frequency rises (Figure 4.9a). For example, at –100°C, the range of radiant energy wavelengths is between 10 and 100 μm, while at 1000°C they are between 1 and 10 μm. As the temperature rises, the dominant form of heat radiation shifts toward the shorter wavelengths: IR (2 to 20 μm), near IR (0.7 to 2 μm), visible (0.4 to 0.7 μm), and UV (0.04 to 0.4 μm). At extremely high temperatures, the hot objects will also radiate x-rays and gamma rays. In industrial applications the bulk of thermal radiation occurs in the IR range, and therefore these thermometers are often referred to as IR thermometers.

This section begins with a discussion of some theoretical aspects of pyrometry, including such topics as emissivity. The description of the specific thermometer designs, features, and installation requirements follows. The section concludes with some definitions of terms used in radiation pyrometry and a list of material for further reading.

THEORETICAL RELATIONSHIPS

Radiation pyrometry stems from Plank's quantum theory, developed around 1900, and from Stefan-Boltzmann's law for total radiated energy. According to the Stefan-Boltzmann equation, the total radiant power density emitted (W) by an object is directly related to the emissivity of that object (E) multiplied by a constant (SB) and by the 4th power of absolute temperature (T):

$$W = (E)(SB)T^4 \qquad \textbf{4.9(1)}$$

where

W is in W/cm^2
E is a fraction (unity for a blackbody)
SB is the Stefan-Boltzmann constant, having a value of 5.6×10^{12} W cm^{2}K^4
T is absolute temperature of the object in degrees Kelvin

Planck's law of radiation goes one step beyond Equation 4.9(1) and predicts the level of radiation emitted per unit surface area of a blackbody at each specific wavelength. Planck's equation is rather complex and therefore is not used much in the everyday work of instrument engineers. According to Plank's law, the radiation emission peaks at shorter and shorter wavelengths as the temperature rises. This is why one can estimate the temperature of a hot iron in a fire (the shorter the wavelength emitted the whiter and therefore the hotter it is) and why the dotted line connecting the peaks at different temperatures is leaning to the left in Figure 4.9a.

This shift in peak values is expressed by Wien's law of displacement, relating the wavelength at maximum radiation (W_1) to absolute temperature (T) and Wien's constant (Cw) as follows:

$$W_1 = Cw/T \qquad \textbf{4.9(2)}$$

© 2003 by Béla Lipták

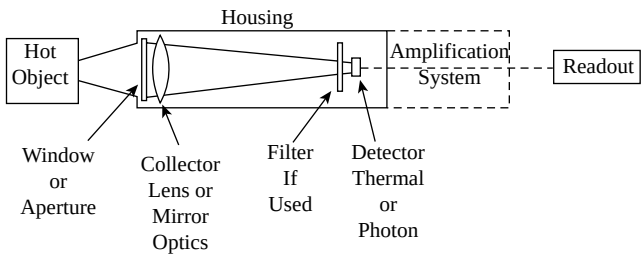

FIG. 4.9b
General radiation pyrometer system.

where

W_1 is in μm

C_w is in units of μm K and has a value of 2897

Based on the above laws, one can build thermometers by measuring either the radiation at specific wavelengths (optical and narrow-band) or all the radiation (total or wide-band). Changes in process material emissivity; radiation from other sources; and losses in radiation due to dirt, dust, smoke, or atmospheric absorption can introduce errors into the total- or single-wavelength pyrometers. For these reasons many users decide to use the more expensive ratio pyrometers.

Thermal radiation is a universal property of matter that is absent only when the material is an inert gas, like helium, or is at absolute zero temperature. From this property of matter, the technique of radiation pyrometry has been developed so that it is possible to infer the temperature of an object without contacting it. This is done with an optical system, which collects some or all of the visible and/or IR energy, sometimes through a filter, and focuses it on a detector (see Figure 4.9b). The detector converts the concentrated energy to an electrical signal, a complex function of the absolute temperature.

The Theoretical and Real Targets

Only the energy given off between about 0.3 and 20 μm is of sufficient magnitude to be of any consequence. This encompasses the visible spectrum (0.35 to 0.75 μm) and the near IR. The intensity and distribution of this energy from a substance may be compared with that of a blackbody which radiates its energy in a theoretically predictable spectral distribution and intensity, such as that shown for several temperatures in Figure 4.9a. The area under the curve represents the total amount of power radiated at all wavelengths.

Real targets, however, always deviate from an idealized blackbody to some degree. The ratio of energy radiated by a real body to that of a blackbody under similar conditions is termed the emittance (E). Two other optical ratio characteristics of targets are reflectance (R) and transmittance (T) and for a body whose temperature is constant, the sum of $E + R + T$ for any wavelength is always 1.0. The radiation pyrometer would gather the radiation from all three of these energy sources over the wavelength band to which it is sensitive. In Figure 4.9c, if the purpose were to measure the temperature

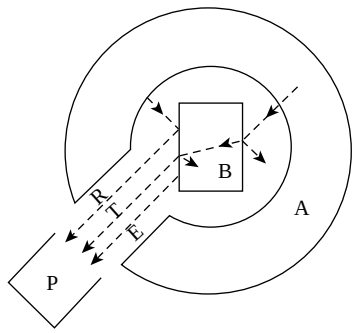

FIG. 4.9c
Emission, reflection, and transmission.

of Object B, and if A were the same temperature as B, B would absorb, emit, reflect, and transmit radiant energy and would appear to be a blackbody.

Frequently A is not uniform in temperature nor does it completely surround B. Furthermore, B might be cooler than A or have a high reflectance which causes it to reflect extraneous sources of radiant energy. If any of these conditions prevail, the measurement of the total energy radiated by B cannot be converted exactly into temperature with the Stefan-Boltzmann law.

For best results, emittance should be high and reflectance low. Transmittance of most solid objects (with the exception of glass) will be near zero. If the process material is not solid, the radiant energy detector will actually see beneath the surface, or if the object is thin, right through it.

Emittance, reflectance, and transmittance are not easy factors to derive and they vary considerably with wavelength. Materials like ferrous metals with a matte surface have a high emittance at the short end of the spectrum, but become lesser emitters for the longer waves. On the other hand, glass acts in nearly the opposite way, being practically transparent to visible energy and almost opaque to wavelengths in the 5- to 7-μm region.

Emittance, Emissivity

The amount of thermal radiation leaving an object depends on the temperature and on the emittance of that object. If the object is a perfect emitter (a blackbody), its emittance is unity. The emissivities of almost all substances are known (Table 4.9d), but unfortunately the *emissivity* determined under laboratory conditions seldom agrees completely with the *actual emittance* under actual operating conditions. This is because emissivity is only one component in determining the emittance of an object; other factors (having effects that cannot be found in tables like Table 4.9d) include shape, oxidation, or surface finish. For this reason one is likely to use published emissivity data only when the values are near unity, as is the case for some metal oxides, ceramics, bricks, and glasses.

The uncertainties concerning emittance can be reduced by creating blackbody conditions (target tubes or target holes, which are discussed later) or by using short-wavelength or

© 2003 by Béla Lipták

TABLE 4.9d
Total Emissivities of Various Substances

Material	*Emissivity*	*Material*	*Emissivity*
Aluminum		Iron	
Unoxidized	0.06	Oxidized	0.89
Oxidized	0.19	Rusted	0.65
Brass (oxidized)	0.60	Lead (oxidized)	0.63
Calorized Copper	0.26	Monel (oxidized)	0.43
Calorized Copper		Nickel	
(oxidized)	0.19	Bright	0.12
Calorized Steel		Oxidized	0.85
(oxidized)	0.57	Silica Brick	0.85
Carbon	0.79	Silver (unoxidized)	0.03
Cast Iron		Steel (oxidized)	0.79
Oxidized	0.79	Steel Plate (rough)	0.97
Strongly oxidized	0.95	Tungsten (unoxidized)	0.07
Copper (oxidized)	0.60	Wrought Iron	
Fire Brick	0.75	(dull oxidized)	0.94
Gold	0.03		

ratio pyrometers. The use of short wavelengths is useful because the signal gain is high in this region. This can be seen in Figure 4.9a, where the change in the amount of energy radiated per unit temperature change gets much higher when the wavelength is short. This high output response tends to swamp the effects of emittance variations and makes the performance of the short-wavelength pyrometers acceptable in such applications as iron and steel processes. The high gain of the radiated energy also tends to swamp the absorption effects of steam, dust, or water spray.

The ratio, or two-color, pyrometer overcomes emittance uncertainties, but has other limitations, which will be discussed later. The emissivities of most materials, including metals, vary a great deal, and some emissivities also vary with temperature. When this is the case, the ratio thermometer is also disabled and the only solution is the actual, on-line measurement of emissivity (using laser devices, which are discussed later). The general rule is to measure the tempreature of an object in a location where its emissivity is the highest and/or where the change in radiated energy is more sensitive to temperature changes than to changes in emissivity.

SELECTING THE RADIATION PYROMETER

In selecting the appropriate type of radiation pyrometer to be used in detecting the temperature of a particular process, one would prefer to select a wavelength-band in which the transmittance (T) is near zero (the material is opaque). In addition, one would like to select a wavelength-band that will not be absorbed by the atmosphere the radiation has to pass through. These two considerations result in a requirement for matching the pyrometer wavelength to the particular process.

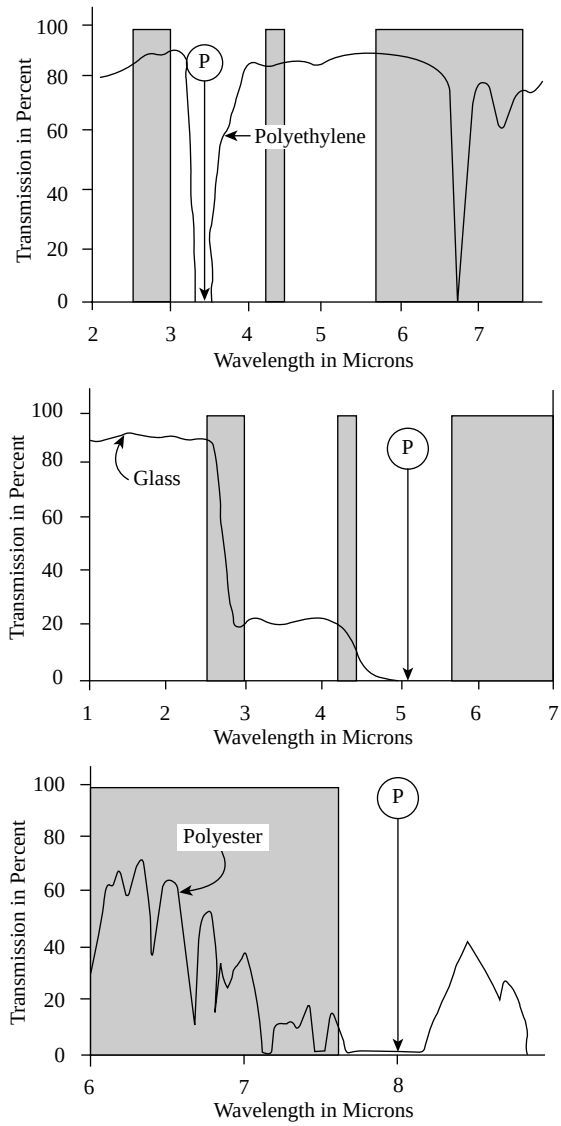

FIG. 4.9e
Radiation pyrometers must be selected on the basis of the transmittance of the process material and the location of the atmospheric absorption bands. (Courtesy of Ircon Inc.)

Figure 4.9e illustrates three different processes showing both the atmospheric absorption bands and the transmittance curves of the particular process materials. The arrow with the letter P for pyrometer indicates the appropriate wavelength-band selection for the radiation thermometer for each process. For polyethylene it is around 3.4 μm, for glass 5 μm, and for polyester 8 μm.

Because of the different needs of the various processes, each radiation pyrometer manufacturer has developed a range of products operating in a variety of wavelength bands as shown in Figure 4.1j and Figure 4.9f. Of the eight bands shown on this illustration, #6 can be considered for use on a polyethylene and #8 on a glass temperature measurement applications. (If the glass is thick enough it can appear opaque even in the near-infrared range.)

© 2003 by Béla Lipták

Short wavelength units like #1, #2, and #3 can be used in iron and steel processing. Long or broad wavelength pyrometers (#7) are useful at lower temperatures where short wavelength radiation can be undetectable. Materials like glass are transparent to shorter wavelengths (Figure 4.9e). Therefore, shortwave pyrometers would not detect the surface temperature, but would measure the temperature below the surface. In some processes, like lamp sealing, this is actually desirable, and therefore the 3- to 4-μm band is used.

RADIATION PYROMETER DESIGNS

Pyrometers can be portable or permanently installed; the radiated energy can reach them through focusing on lenses or through optical fibers. In addition, they can be categorized according to the number and width of the wavelength-bands used. When the full spectrum of 0.3 to 15 μm is utilized (#5 on Figure 4.9f), the device is called a wide-band or total radiation pyrometer. When a single small segment of the spectrum is used (for example, #8 on Figure 4.9f), the design is called a narrow-band pyrometer. If that narrow band falls within the visible spectrum (#1 on Figure 4.9f), this subgroup of the narrow-band pyrometers is called an optical, color, or brightness pyrometer.

When, instead of measuring the radiation intensity of a single wavelength band, the instrument detects the ratio of the intensities of two wavelengths, the pyrometer is called a ratio, or two-color, thermometer (Figure 4.9g). When a pyrometer operates in the IR spectrum (0.7 to about 15 μm), sometimes the unit is referred to as an IR thermometer.

Of these many design variations, the fiber-optic units will not be discussed here. Section 4.5 is devoted to their description and they are also covered in Section 4.1 (Figure 4.1n). The others are discussed below.

With the passage of time, the use of total radiation pyrometers has dropped and the use of the more accurate (and more expensive) ratio pyrometers has increased. Optical pyrometers are most often used as portable units.

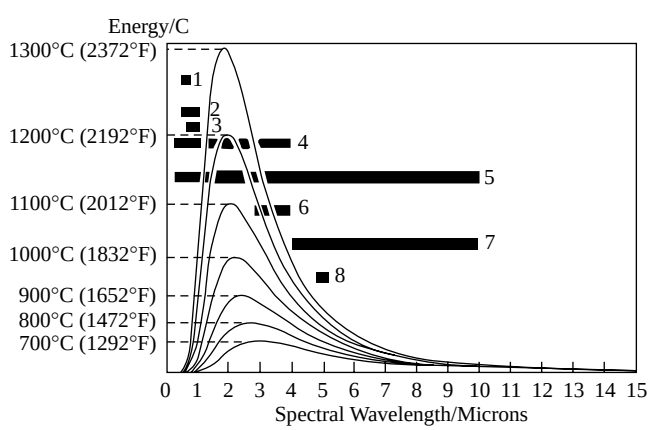

FIG. 4.9f
Pyrometers and their wavelength-bands.

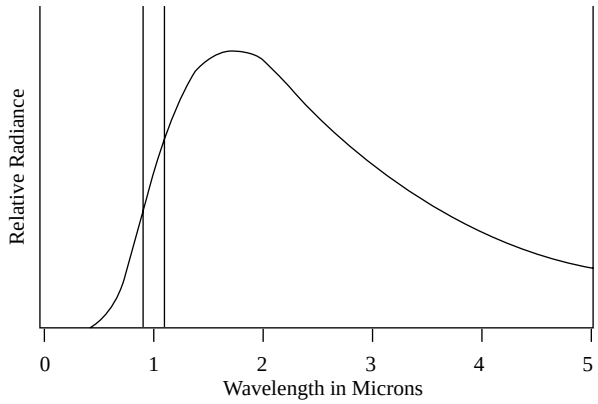

FIG. 4.9g
Ratio pyrometer used to detect the temperatures of molten metals, kilns, and furnaces. (Courtesy of Ircon Inc.)

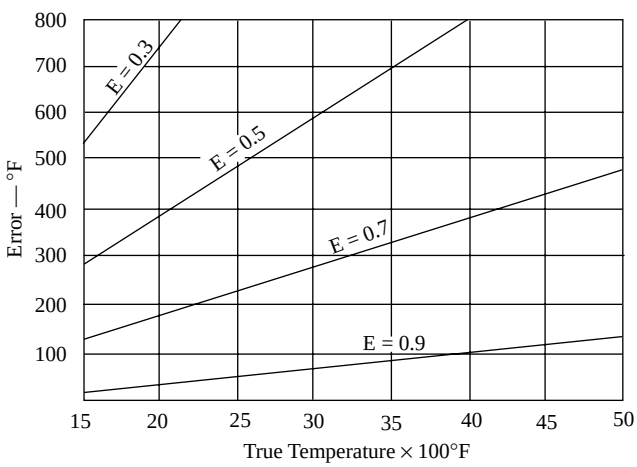

FIG. 4.9h
Error in reading of broad-band radiation pyrometer as function of temperature and emissivity.

Total Radiation Pyrometers

Broadband (total) radiation pyrometers attempt to measure as much of the radiant energy coming from a hot body as possible. The simplest of the three types (total, narrow, ratio), it has substantially no selectivity for specific wavelengths other than a cutoff inherent in the optical system and is dependent on the total emittance of the surface being measured.

Figure 4.9h shows the error in reading for various emissivites and temperatures when a typical instrument of this type is calibrated to read blackbody temperatures. A calibration control on the readout instrument permits the user to compensate for this error, which corrects the reading as long as the emittance does not change. The proper setting of the adjustment is made with the aid of a second thermometer known to be correct; or, knowing the nature of the target and referring to a table giving total emissivities (see Table 4.9d), the adjustment can be set to the correct figure.

© 2003 by Béla Lipták

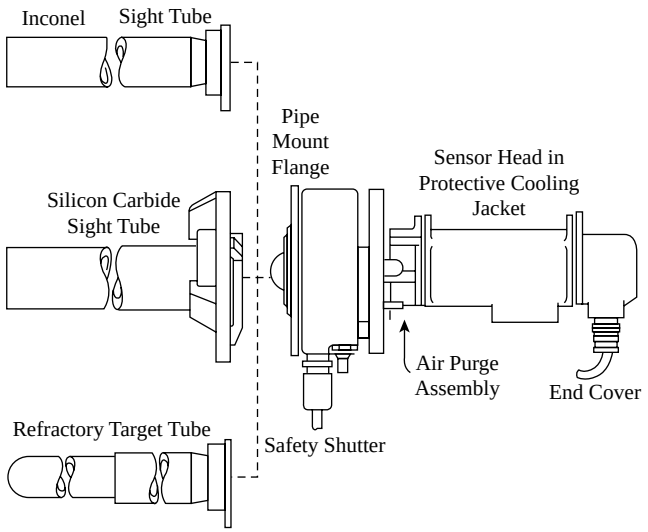

FIG. 4.9i
Accessories required for installing a pyrometer through the wall of a furnace. (Courtesy of Mikron Instrument Co.)

Broadband radiation pyrometers must have an unobstructed sighting path to the target. The presence of smoke or carbon dioxide will absorb some of the radiant energy and cause a low reading. The optical system must be kept clean, with a sighting window protected from any corrosive gases that otherwise would come in contact with it. In furnaces, a closed-end sighting tube is frequently used to protect the optics and to provide a clear sighting path (Figure 4.9i). The back end of the tube assumes the same temperature as the furnace. Water or air cooling is sometimes used to keep the housing temperature cool on these installations.

Ambient temperature compensation is required for those total radiation pyrometers using a thermopile detector. Nickel wire, having a temperature coefficient opposite to that of the thermopile wires, is most often utilized. For low-temperature work, a thermostatically controlled housing is often employed to eliminate any ambient temperature fluctuations.

Narrow-Band Pyrometers

Single-band pass (narrow-band) pyrometers operate over a selected, usually narrow, band of the energy spectrum centered at a desired point. For high-temperature measurement of metals, for instance, the band might be very narrow at the 0.65-μm point, the read end of the visible spectrum where metal emissivity is highest. At this visible point, the instrument might be referred to as a brightness pyrometer.

To measure gas temperatures, a band around 4.3 μm to pick up carbon dioxide might be chosen, while glass surface temperatures, previously mentioned, would be measured in the 5- to 7-μm wavelength.

Emissivity over a narrow wavelength band will not vary as much as it would over the total spectrum, but the limited-band pyrometer will suffer somewhat from a lack of sensitivity because of the reduced energy available. The use of more sensitive photon detectors helps make up this deficiency and also provides a desired band pass. Because the energy content of the radiation increases as the wavelength gets shorter, the narrower bands are most often used to detect higher temperatures (above 500°C, or 932°F). A narrow band is usually less than 0.5 μm wide.

Ratio Pyrometers

The ratio, or two-color, pyrometer measures the energy it receives from two rather narrow bands and divides one by the other. When the two bands are chosen so that there is very little change in emissivity from one to the other, such as would be the case if the bands were close together (Figure 4.9g), the emissivity factor nearly cancels out. Thus, low emissivity bodies, which create the most error for the broad- and single-band pyrometers, do not have such a large effect on the ratio-type instrument.

The selection of the two wavelengths is not arbitrary but, like the single-band pyrometers, is made for the particular application.

Ratio pyrometers are more complex and more expensive than single-band pyrometers, but they provide better accuracies when the target behaves like a gray object or when its emissivity is a variable. (The emissivity of many substances varies with temperature.) In addition to being independent of emissivity, measurements made by ratio pyrometers are also unaffected by dust or other contaminants in the field of view (such as dirty windows), by changes in target size, or by periodic blockage of the sight path.

In some more advanced designs, more than two colors (wavelengths) are used and their evaluation algorithm is more complex than a simple ratio.

Figure 4.9j illustrates the operation of the ratio (two-color) pyrometer where the wavelengths are alternatively selected by a rotating filter wheel. These eliminate emittance errors if the emittance is the same at both wavelengths. Unfortunately this is seldom the case; usually emittance is wavelength-dependent. The only solution is to bring the two wavelengths very close together, but then they become insensitive to temperature.

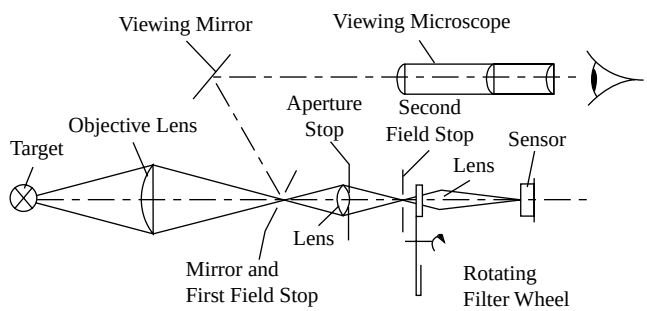

FIG. 4.9j
Ratio pyrometer.[1]

© 2003 by Béla Lipták

For these reasons the ratio pyrometers are not as widely used as one might expect. On the other hand, they are still very useful on applications where the target is too small to fill the field or view (e.g., in the drawing and coating of wires) or where the target is obscured by cool dust (as in cement kilns).

Manual Optical Pyrometers

Optical pyrometers are narrow-band or two-color radiation pyrometers that operate in the visible spectrum around the 0.65-μm point. The human eye, acting as the detector in the manually balanced type, compares a source of known radiant energy generated within the instrument by a calibrated tungsten lamp to the incoming unknown source. A filter interposed between the eye and both sources of energy cuts out the shorter wavelengths. This serves a dual purpose: (1) it minimizes the difference between eyes, permitting an easier color match, and (2) it permits an extension of the temperature range beyond the point where the eye could no longer tolerate the amount of energy if viewed directly (Figure 4.9k).

The instrument is shaped to be held in the hand and up to the eye so that it may be sighted on the target. An adjustable focus permits the operator to focus an image of the source whose temperature is to be determined. The filament of the standard source is placed on the same plane as this image so that the two appear superimposed on one another when viewed through the eyepiece.

A null type of balance is usually used where a rheostat, moving against a calibrated dial, is manually rotated to vary the current through the standard source until it just disappears into the field of the unknown. A slight modification of this principle maintains the standard source constant and varies the amount of interposing absorbing gate opening in the optical path.

The range of the manual optical pyrometer is limited on the low end to a minimum of 1400°F (760°C), since there is insufficient emission of visible light for an accurate comparison below this figure. At 2400°F (1316°C), the image would become too bright to look at directly, but filters are usually interposed to permit readings as high as 6300°F (3500°C).

The use of the human eye as the detector restricts accuracy somewhat. This is because the eye responds to both color and brightness rather than directly to energy and no two eyes are alike. However, it is possible to detect both a color and a brightness match by adjusting to the minimum difference between known and unknown.

The manual optical pyrometer is a self-contained unit with its own power supply for operating the current for the known radiant energy source. It can be mounted in place or handheld by an operator as he takes a sighting. Figure 4.9l and Figure 4.1l illustrate the relationship between distance and target size in using portable IR pyrometers.

Its advantages include that it is a light, portable, and self-contained unit of reasonable accuracy if sighted into a near-blackbody furnace. Its disadvantages are:

1. It requires the operator to adjust the temperature dial manually. It is not suitable for alarm or control functions.
2. It can only be used at relatively high temperatures where plenty of visible energy is given off.
3. It is subject to emissivity errors inherent to a narrow-band radiation pyrometer.

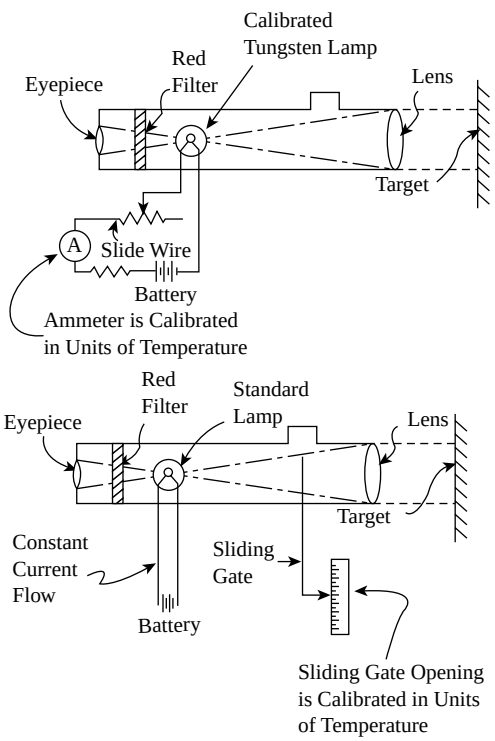

FIG. 4.9k

In optical pyrometers the target radiation is focused on a lamp and is compared to the radiation intensity of the light filament. Matching of the two intensities is determined visually by either adjusting the current flow through the calibrated tungsten lamp (left) or by changing the opening of a sliding gate (right) until the two intensities are balanced. The use of a red filter allows the comparison to be made at a specific color (wavelength).

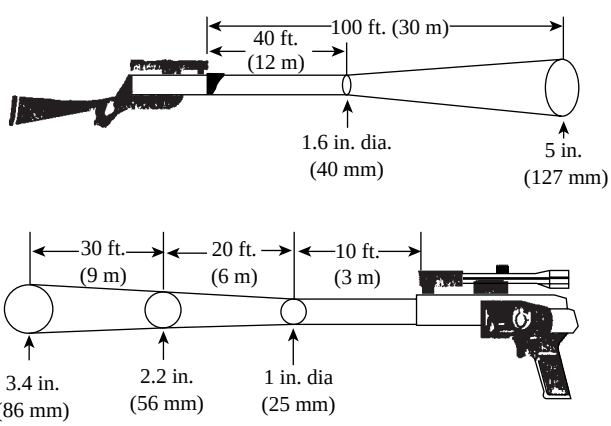

FIG. 4.9l

Target areas and distances applicable to portable infrared pyrometers. (Courtesy of Wahl Instruments Inc.)

© 2003 by Béla Lipták

Automatic Optical and IR Pyrometers

The automatic optical pyrometer uses an electrical radiation detector rather than the human eye, and consequently it is not limited to the visible wavelengths of the spectrum. It can reach far into the IR or the near UV using a narrow band, a two-color band, or a wide band selection in accordance with the optical system and detector.

Although there are many adaptations, the automatic optical and/or IR pyrometer operates essentially by comparing the amount of radiation emitted by the target with that emitted by an internally controlled reference source. The output is proportional to the difference in radiation between the variable source and the fixed reference. The system usually consists of two components: the optical head and the electronic amplifier.

In some models (Figure 4.9m), the optical head contains a temperature-controlled blackbody source, the required filters, a detector, a preamplifier, and an optical chopper. The chopper, driven by a synchronous motor, alternately exposes the detector to incoming and cavity radiations at a frequency that might be in the 60- to 120-cps range.

Another model (Figure 4.9n) uses the human eye to adjust the focus. Radiant energy passes through the front lens onto a dichroic mirror, which allows visible light to pass through, while IR radiation is reflected onto the detector. The operator

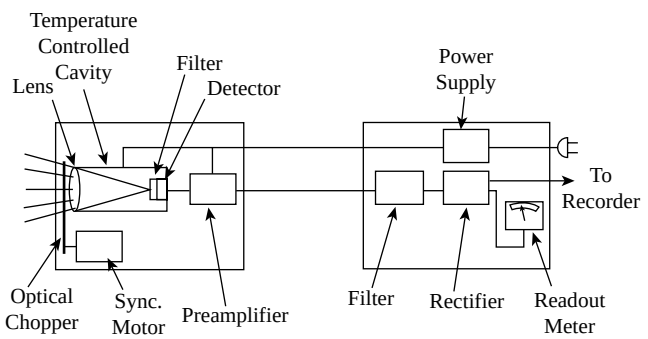

FIG. 4.9m
Infrared system.

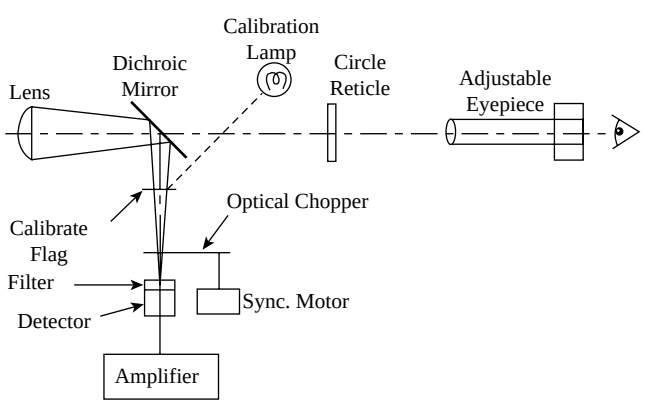

FIG. 4.9n
System with dichroic mirror.

TABLE 4.9o
Uses of Automatic Optical and Infrared Pyrometers

Spectral Response (Microns)	*Main Areas of Application*
0.2–0.3	Jet Engine Rotor Blades, Vacuum Deposition
0.653	Arc Furnaces, Hot Metal Filaments, Refractory Metals
0.6–1.0	Metal Processing Industry
2.0–2.6	Textiles, Plastics, Ceramics, Food Products
3.43 ± 0.14	Thin Film Polymers, Vinyl, Nylon
4.42	Carbon Dioxide Gas
4.8–5.6	Glass, Dry Chemicals, Oxidized Metals
8–14	Background Land, Sea, Clouds, Profiles for Hot Spot Detection

adjusts the eyepiece for the correct focus by just filling the circle reticle plate with the visible image.

The calibrate flag is solenoid-operated from the amplifier. When actuated, it cuts off the radiation coming through the lens and focuses the calibrate lamp onto the detector. The known radiation from the lamp allows the entire system to be checked.

Automatic optical or IR pyrometers are closely tied in with radiometers and other optical devices. Telescopic lenses are sometimes employed for their special effects. The instrument may have a wide-angle field of view for large area scanning or it may have a very narrow angle where the target is only 0.05 in. (1.27 mm) in diameter at 8 in. (203 mm) distance.

The entire pyrometer, optics plus amplifier, has been packaged into a single, handheld, and battery-operated device for open fieldwork. It is shaped somewhat like a pistol held in the hand and aimed at the target. Pulling the trigger (Figure 4.9l) energizes the standard reference source and the readout indicator.

A very practical application of the IR pyrometer is to use it in the 8- to 14-μm range as a hot spot detector. The operator can move quickly from one object to another looking for undesirable internal sources of heat generation. It is possible to attach a camera to the unit and take a temperature profile as a picture for immediate or future analysis.

Table 4.9o lists some applications at various spectral responses for this versatile temperature-measuring device.

DETECTORS

The detector receives the radiant energy focused on it by the optical system and generates an electric output signal in response to it. Detectors are grouped into two main classes: thermal detectors and photo-detectors.

Thermal Detectors

Thermal detectors generate an output because they are heated by the energy they absorb. This category includes thermocouples (TCs), thermopiles, pneumatic detectors, the metallic

© 2003 by Béla Lipták

or the thermistor-type bolometers, and the pyroelectric devices. Relative to the photo-detectors, these units have a lower sensitivity, and their output are less affected by changes in the radiated wavelengths. Most are limited in their speeds of response by their mass; others, like the pyroelectric detectors, are rate-sensitive. This means that the output responds not to the temperature of the sensor, but to the rate at which it is changing. While this speeds up the response, it also requires more electronics and complexity. The use of pyroelectric detectors is limited by their need for optical shopping and their sensitivity to vibration.

Advanced thin-film thermopiles achieve response times in the 10- to 15-ms range, while silicon thermopiles also increase the output signal strength. Thermopiles and bolometers respond to radiant energy throughout the whole spectrum and therefore are more suited for detection in total radiation pyrometers. Considering speed, sensitivity, and stability, the best choice for total-radiation applications is the silicon thermopile detector.

Photo-Detectors

Photo-detectors are wavelength-sensitive and therefore are better suited to narrow-band pyrometry. The output produced by the photo-multiplier tubes and photo-detectors is not caused by heat, but by the electrical charges that are released as the radiant energy reaches the detector. The sensitivities of these detectors are in the microseconds. Their main disadvantage is instability at longer wavelengths and when operating at higher temperatures. Consequently, they are used as narrow-band detectors on short-wavelength applications and are frequently provided with cooling.

Photo-detectors can be photo-conductive, photo-voltaic, or photo-emissive devices (Figure 4.9p). The use of photo-emissive devices, such as photo-multiplier tubes, has been diminishing. Photo-conductive detectors change their resistance as a function of temperature and include the lead selenide and lead sulfide cells. They are sensitive in the 1- to 3-μm range and therefore are either used with filters (Figures 4.9k, 4.9m, and 4.9n) in narrow-band pyrometers or in medium temperature (200 to 800°F, or 93 to 427°C) measurement (Figure 4.9a) applications as wideband detectors.

The photo-voltaic cell's output is a function of the absorbed radiation. The most widely used cell material is silicone, but germanium and iridium antimonide are also used. The silicon cell matches the short-wavelength thermal emissions of high-temperature objects (0.5 to 1.0 μm) at temperatures from 750 to 7000°F (400 to 3870°C). The germanium cell with its 0.7- to 1.8-μm range is suited for medium temperature measurement and is more stable, more reproducible, and faster than the photo-conductive lead sulfide cells.

Iridium antimonide has been used to detect the temperature of hot glass surfaces, but due to its poor sensitivity it has been replaced in many applications with pyroelectric thermal detectors in the 8- to 14-μm range. The speed of the photo-detectors also permits them to be used for measuring the temperature of small objects moving at high speed, where relative energy output would be small.

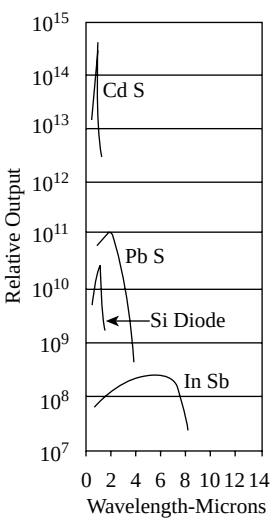

FIG. 4.9p
Response to energy of some photo-detectors.

SELECTION

In selecting a radiation pyrometer for a particular application, consideration must be given to the following:

1. The field of view, or the size-distance relationship
2. The transmission qualities of the collector system and any windows or filters in the optical path.
3. The band pass sensitivity of the detector

Figure 4.9q shows a typical wide-angle field of view. Note how the target size requirement necks down to a minimum at the focal length of lens in such a system. The narrow-angle field of view, shown in Figure 4.9r, flares out more slowly. Cross-sectional areas in either case can vary from circular to rectangular and even slot-shaped, depending on apertures in the housing design. On some designs telescopic eyepieces can magnify the radiant energy so that much smaller targets at greater distances can be viewed. Targets 1/16 in.

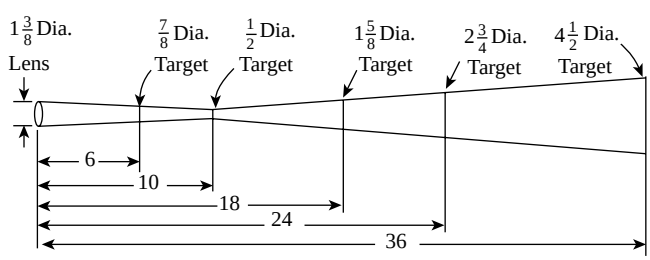

FIG. 4.9q
Sighting path of the wide-angle total radiation pyrometer.

© 2003 by Béla Lipták

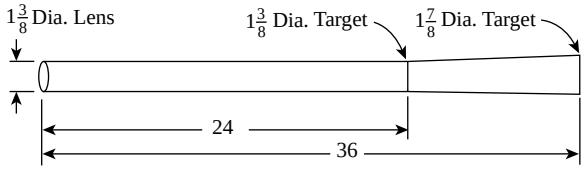

FIG. 4.9r
Sighting path of the narrow-angle total radiation pyrometer.

(1.6 mm) in diameter are feasible with the proper pyrometer design.

The physical shape of the optical system (lens of curved mirrors) and its mounting within the pyrometer housing control the sighting path, while the material from which it is made determines the optical properties. Glass does not transmit well beyond 2.5 μm and is suitable only for the higher temperatures where plenty of output is available. Other popular optical materials are quartz (fused silica) to 4 μm and crystalline calcium fluoride to about 10 μm. Lesser used (and more expensive) materials will increase the transmission even more.

Windows and filters in front of or behind the optical system can alter the transmission properties greatly. A plate glass window in front of a calcium fluoride lens, for instance, will very effectively stop the longer wavelengths which would have passed through the lens. A band pass filter might be purposely placed in front of the detector to cut off unwanted wavelengths.

INSTALLATIONS AND ACCESSORIES

The installation of an IR thermometer requires attention to detail to ensure successful operation. Figure 4.1l has illustrated some of the problems with installation of IR thermometers. Ideally, a clear unobstructed line of sight is required and the target has to be large enough to fill the cone of vision. The spot size required is related to the distance to the sensor and the user should consult the manual for details.

Solid obstructions have to be removed or eliminated from the field of view by possibly aiming the instrument at a different angle or by using a fiber optic remote sensor system. For applications with sighting windows, the instrument must be selected to use a wavelength that will pass through the window material unchanged. The window also must be large enough so as not to obstruct the cone of vision, and it has to be kept clean by possibly using an air purge. Smoke, steam, and dust all cause temperature fluctuations.

The temperature-measuring requirement for industrial applications involves either the surface temperature of equipment or objects that are out in the open or the temperature inside vessels, pipes, and furnaces. Surface-temperature-sensing pyrometers can be portable (Figure 4.9l) or permanently installed. When internal temperatures are of interest, one can look into the process through windows (Figure 4.9s). In such installations, the pyrometer can be mounted on an adjacent pedestal or supported by a bracket attached to the vessel, as long as the pyrometer is shielded from excessive heat. It is advisable to provide an internal purge to periodically clear the dirt that is likely to accumulate on the window.

When a pyrometer is installed through the wall of a furnace a large number of installation-related accessory components are needed. These can easily double the basic cost of the pyrometer itself. In Figure 4.9i, the pyrometer sensor head and its aiming tube, or telescope, are mounted inside the cooling jacket. The coolant flow required is a function of the ambient temperature in the area and varies from 0.2 GPH (0.8 1ph) at 150°F (60°C) all the way up to 20 GPH (76 1ph) at 600°F (315°C). Proceeding to the left on Figure 4.9i, the next component is the air purge assembly followed by the safety shutter, or slide gate shutter, which allows the sealing of the furnace when the pyrometer is removed.

Sighting the pyrometer on the target through a tube purged by a clean and nonabsorbing gas minimizes the need for cleaning the lenses and windows. When interference from flames or other sources cannot be filtered out optically, the purged sighting tube, shown on the left of Figure 4.9i, can be extended almost to the target. In this way the sighting tube allows a more accurate targeting on the point of interest and also makes purging more effective as the air fills the tube.

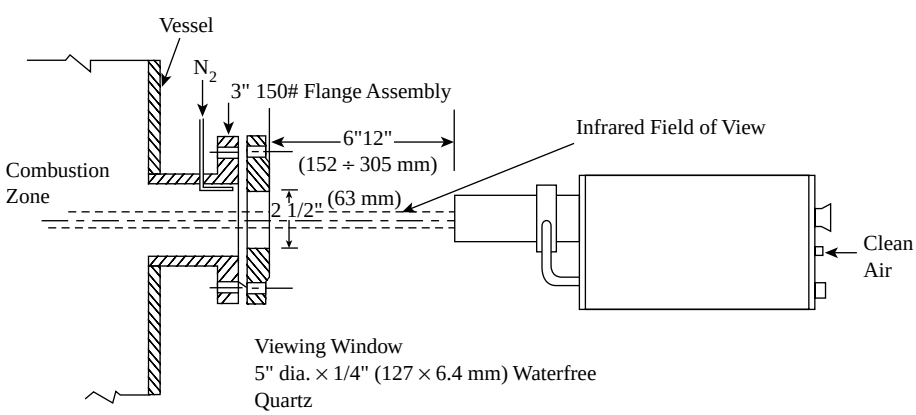

FIG. 4.9s
Radiation pyrometer installed on a combustion process. (Courtesy of Williamson Corp.)

© 2003 by Béla Lipták

This also reduces the influence of smoke and dust in the atmosphere between the sensing head and the desired target and reduces unwanted background radiation. Sighting tubes are available in different lengths and in constructions of Inconel (for up to 2100°F, or 1105°C), silicon carbide (up to 3000°F, or 1650°C), refractory alumina (up to 2900°F, or 1600°C), or aluminum or stainless steel (below 600°F, or 315°C).

Closed-end target tubes (also shown in Figure 4.9i) are also made of the above listed materials and are used on liquid service or in other processes where the inside temperature of the target tube sufficiently represents the process temperature. In addition to sighting tubes or in place of target tubes, it is possible to form the object of interest into a better or ideal emitter. This is done by forming the object into a concave shape or drilling a hole in the target and sighting the pyrometer onto that hole.

ADVANCES AND NEW DEVELOPMENTS

New technologies such as microprocessors, fiber optics, lasers, buses, and networks have also changed radiation pyrometry. One important new development is the availability of the laser reflectometer (Pyrolaser is a trademark of Pyrometer Instrument Co.) which can measure the emissivity of the process material at the same location, temperature, and wavelength as used in the pyrometer. This eliminates the potential for emissivity error by allowing its value to be continuously and automatically corrected. This device also helps in overcoming errors caused by radiation from hotter surfaces.

This is done by taking a radiant measurement of the hotter refractory surface and compensating for it by calculating its reflectivity as: $R = 1 - E$. As of this writing, the laser-based emissivity compensator operates at only one wavelength (0.865 μm) and therefore is effective only if that is the wavelength of interest. However, it is likely that with the passage of time it will become available at other wavelengths also.

Other advances include the increase in the number of spectral bands available, the reduction in the required target size (1 mm diameter), and the increase in the distance-to-target ratios, which can exceed 200:1. The intelligent pyrometer is more than a sensor—it is a measurement system that routinely provides linear outputs and digital displays and can minimize ambient effects. Intelligent units using two pyrometers are also used to correct for background radiation.

Another area of technological innovation has been in the field of line-scanning pyrometers. These have been developed to monitor the surface temperatures of cement kilns to indicate internal material buildup or refractory deterioration. As the pyrometer scans left to right while the kiln rotates on its horizontal axis, the pyrometer scans its total surface and feeds this information into a small computer for processing. By the same technique, moving sheets of paper, glass, steel, or plastic can be scanned.

There is a growing market for line scanners that can produce a two-dimensional thermal image. This type of IR thermometer is used to measure wide webs such as hot strip steel, glass, plastic, and paper. This instrument utilizes one detector and two 45-degree mirrors with one mirror rotating and scanning over a 90° angle as shown in Figure 4.1o. For moving targets, the instrument uses a software technique to create two-dimensional thermal images of the moving web. The software provides temperatures at any location on the web and can provide output signals that can be used for closed loop control or stored for future review.

Thermal imagery is a rapidly growing application of IR technology that is used on some automobiles and by military and law enforcement in night vision applications. Architectural analysis of building insulation, surveillance, and quality control are other uses. This imaging system is an IR thermometer that uses a detector called a focal plane array instead of a single sensor. Its functionality is similar to a digital camera, except that, instead of capturing photographic images, each pixel measures temperature. A two-dimensional image is created using software resident within the system. The detector can have as many as 76,000 pixels. The image of the temperature profile can be used for closed loop control of processes, such as detecting defective personal computer boards, or stored away for future analysis.

SUMMARY

Most manufacturers of IR instruments continue to refine existing products and offer enhanced capability with newer models. One new model offers bidirectional digital networking communications. Multiple sensors can connect to host systems for monitoring, control, and diagnostics. The design engineer is strongly urged to consult with multiple vendors to get recommendations for selecting the proper instrument for each application.

The broadband pyrometer is used generally in industry for readout and automatic control. It can cover wide temperature ranges and is the least expensive of the three types. Narrow-band and two-color pyrometers are used, where necessary, to minimize the emissivity effects and for special applications where it is desirable to select the particular band pass.

The prospective user of a radiation pyrometer should consider the following points:

1. Target temperature, low, normal, and high limits.
2. Minimum target size and distance factors.
3. Target material and emittance.
4. Angle of observation.
5. Is target stationary or moving? If moving, will the speed of response of the pyrometer be fast enough?
6. Atmospheric conditions between target and detector.
7. Ambient temperature.

© 2003 by Béla Lipták

8. Can pyrometer sight directly on target or must it sight through a sealed auxiliary window such as required for vacuum or pressure?
9. Is scale to be read directly in temperature units or will an arbitrary reading be satisfactory?

Advantages

IR thermometers are ideal for moving targets such as glass, plastic, and steel. They do not interfere with the process. They are also ideal for measuring products with very high temperatures or hostile environments. They can see through windows to measure products in a vacuum furnace or a semiconductor reactor. Infrared thermometers can measure targets as small as 0.025 in. in diameter and can respond in 10 ms to a temperature change. Other advantages of IR thermometers include:

1. They do not require physical contact with material whose temperature is being measured.
2. They have a fast speed of response—they can be used on moving targets.
3. They can look at small targets (1/16 in. or 1.6 mm in diameter) or measure the average temperature over a wide area.
4. They measure much higher temperatures than TCs.

Disadvantages

The disadvantages of IR thermometers include:

1. They are more fragile and costlier than TCs, resistance temperature detector, or thermistors.
2. They have a nonlinear scale shape, approximating the 4th power of the temperature.
3. Their emissivity of target may cause a low temperature reading if not corrected.
4. A relatively wide temperature span is required.

DEFINITIONS

Absorbance (A)—Ratio of radiant energy absorbed by a body to the corresponding absorption of a blackbody at the same temperature. Absorbance equals emittance on bodies whose temperature is not changing. ($A = 1 - R - T$, where R is the reflectance and T is the transmittance.)

Band pass filter—An optical or detector filter that permits the passage of a narrow band of the total spectrum. It excludes or is opaque to all other wavelengths.

Blackbody—The perfect absorber of all radiant energy that strikes it. The blackbody is also a perfect emitter. Therefore, both its absorbance (A) and emissivity (E) are unity. The blackbody radiates energy in predictable spectral distributions and intensities which are a function of the blackbody's absolute temperature (Figure 4.9a). A blackbody can be configured as shown in Figure 4.9t.

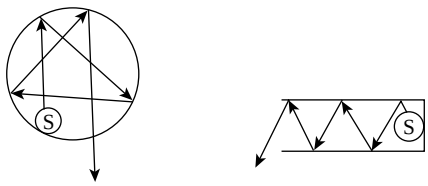

FIG. 4.9t
Emissivity of blackbody sources in the laboratory is around 0.99.

Bolometer—Thermal detector that changes its electrical resistance as a function of the radiant energy striking it.

Brightness pyrometer—Uses the radiant energy on each side of a fixed wavelength of the spectrum. This band is quite narrow and usually centered at 0.65 μm in the orange-red area of the visible spectrum.

Detector—A device that measures the amount of energy radiated by an object. It can be a thermal detector or a photodetector. Thermal detectors respond to radiation by changing their volume, capacitance, or generation of millivoltages; they can be TCs, thermopiles, pneumatic detectors, or bolometers. Their common feature is their relatively slow response. Photodetectors are semiconductors that produce a signal in proportion to the photon flux that strikes them.

Emissivity or emittance (E)—The ratio of radiant energy emitted by an object divided by the radiant energy which a blackbody would emit at that same temperature. If the emittance is the same at all wavelengths, the object is called a gray body. Some industrial materials change their emissivity with temperature and sometimes with other variables also. Emissivity always equals absorption and it also equals 1 minus the sum of reflectance and transmittance ($E = A = 1 - T - R$).

Gray body—An object having an emittance of less than unity, but this emittance is constant at all wavelengths (over that part of the spectrum where the measurement takes place). This means that gray-body radiation curves are identical to the ones shown in Figure 4.9a, except that they are dropped down on the radiated power density scale.

Infrared—That portion of the spectrum whose wavelength is longer than that of red light. Only the portion between 0.7 and 20 μm gives usable energy for radiation detectors.

Mechanical emissivity enhancement—Mechanically increasing the emissivity of a surface to near-blackbody conditions (using multiple reflection).

Micron—0.001 mm. 10,000 Å. A unit used to measure wavelengths of radiant energy.

Narrow-band pyrometer—A radiation pyrometer that is sensitive to only a narrow segment of wavelengths

© 2003 by Béla Lipták

within the total radiation spectrum. Optical pyrometers are one of the devices in this category.

Optical pyrometer—Also called a brightness pyrometer, it uses a narrow band of radiation within the visible range (0.4 to 0.7 μm) to measure temperature by color matching and other techniques.

Photodetector—Measures thermal radiation by producing an output through release of electrical changes within its body. They are small flakes of crystalline materials such as CdS or InSb which respond to different portions of the spectrum, consequently showing great selectivity in the wavelengths at which they operate.

Ratio pyrometer—See **two-color pyrometer**.

Reflectance or reflectivity (R)—The percentage of the total radiation falling on a body which is directly reflected without entry. Reflectance is zero for a blackbody, and nearly 100 percent for highly polished surface. ($R = 1 - A - T$, where A is the absorbance and T is the transmissivity.)

Spectral emissivity—The ratio of emittance at a specific wavelength or very narrow band to that of a blackbody at same temperature.

Thermopile—Measures thermal radiation by absorption to become hotter than its surroundings. It is a number of small TCs arranged like the spokes of a wheel with the hot junction at the hub. The TCs are connected in series and the output is based on the difference between the hot and cold junctions.

Total emissivity—The ratio of the integrated value of all spectral emittances to that of a blackbody.

Transmittance or transmissivity (T)—The percentage of the total radiant energy falling on a body, which passes directly through it without being absorbed. Transmittance is zero for a blackbody and nearly 100 percent for a material like glass in the visible spectrum region. ($T = 1 - A - R$, where A is the absorbance and R is the reflectance.)

Two-color pyrometer—Measures temperature as a function of the radiation ratio emitted around two narrow wavelength bands. Also called ratio pyrometer.

Wideband (total) pyrometer—A radiation thermometer that measures the total power density emitted by the material of interest over a wide range of wavelengths.

Reference

1. Tenney, A.S., "Applying Radiation Thermometers to Process and Lab Measurements," *InTech*, August 1988.

Bibliography

Ackland, K., Selecting the right infrared temperature sensor, *InTech*, June, 1998.

Adler, C.B., "Reliability Aspects of Temperature Measurement," Instrumentation, Systems, and Automation Society Conference, Chicago, 2001.

Adrain, P., "Technical Advances in Fiberoptic Sensors: Theory and Applications," September 1991, pp. 23–45.

Banfield, A.R., "Evaluating the Performance of Optical and Radiation Pyrometers," *SPIE Proceedings*, Vol. 234, Bellingham, WA: International Society for Optical Engineering, 1980, p. 62.

Barber, R., "Review of Infrared Thermometry for the Glass Industry," *Journal of Non-Crystal Solids*, Vols. 38 and 39, 1980, p. 903.

Barron, W.R., "Infrared Thermometry," *Measurements and Control*, April 1991.

Dehitt, D.P., et al., "Theory and Practice of Radiation Thermometry," New York: Wiley Interscience, 1988.

Desmarais, R. and Breuer, J., "How to Select and Use the Right Temperature Sensor," *Sensors*, January 2001.

"Fiberoptic Sensing of Physical Parameters," *Sensors*, October 1988, pp. 21–26.

"Fiberoptic Thermometry for Difficult Surface Temperature Measurements," *Sensors*, September 1990, pp. 17–21.

Fraden, J., *Handbook of Modern Sensors*, 2nd ed., Heidelberg: Springer-Verlag, 1997.

Hage, J., "Smart Temperature Transmitter Accents Accuracy," *Control*, September 1999.

Hashemian, H.M. and Peterson, K.M., "Assuring Accurate Temperature Measurement," *InTech*, October 1989.

Intrieri, A.J., "Optical Fibers Look Around Obstacles to Measure Temperature," *Control Engineering*, December 1997.

Japanese Standards Association, "General Rules for Expression of the Performance of Radiation Thermometers," JIS C 1612-1988, Tokyo, 1988.

Johnson, R., "Measuring the Hot, Difficult and Inaccessible," *Control Engineering*, June 2001.

Katzir, A., Bowman, H.F., Asfour, Y., Zur, A., and Valeri, C.R., "Infrared Fibers for Radiometer Thermometry in Hypothermia and Hypothermia Treatment," *IEEE Transactions on Biomedical Engineering*, Vol. 36, June 1989, pp. 634–637.

Kerin, T.W. and Katz, E.M., "Temperature Measurement in the 1990s," *InTech*, August 1990.

Krigman, A., "Guide to Selecting Non-contact Temperature Instrumentation," *InTech*, June 1983.

Leftwich, R.F., "Infrared Radiometry Applied to Critical Temperature," Publication No. ANL-78-7, Argonne National Laboratories' Symposium, 1977.

Magison, E., "Temperature Measurement," *InTech*, October 25, 2001.

Merchant, J., "The Dawn of a New Age in Infrared Thermometry," *Measurements and Control*, February 1991.

Michalski, L. et al., *Temperature Measurement*, 2nd ed., London: John Wiley & Sons, 2001.

Ovren, C., Adolfsson, M., and Hok, B., "Fiber-Optic Systems for Temperature and Vibration Measurements in Industrial Applications," Conference on Optical Techniques in Process Control, The Hague, June 14–16, 1983.

Peacock, G.R., "Radiation Thermometry: Temperature Measurement Without Contact," Paper #91-0305, Instrumentation, Systems, and Automation Society Conference, Toronto, 1991.

Pepe, R.C., "Fiberoptic Calibration Consideration," National Conference of Standards Laboratories, Boulder, CO, July 1987, pp. 66-1–66-12.

Peterson, W., "Choosing the Right Temperature Transmitter," *In Tech*, April 1991.

Pompei, F. and Pompei, D., "Infrared Thermocouples: Temperature without Touching," *InTech*, January 1993.

Prentice, G.R., "Seven Reasons Why Temperature Transmitters Are Better Than Direct Wiring, *Process Heating*, June 1999.

Saaski, E.W., Hartl, J.C., and Mitchell, G.L., "A Fiberoptic Sensing System, Based on Spectral Modulation," Instrument Society of America 7, 1986, 1177–1184.

Sakuma, F. and Hatori, S., "Establishing a Practical Temperature Standard by Using a Narrow-band Radiation Thermometer with a Silicon Detector," TMCSI, 1982, p. 421.

© 2003 by Béla Lipták

Schoenstein, P.G., "Infrared Sensors Track Temperature," *InTech*, April 1991.

Stockdale R.B., "New Digital Control Systems Need Better Temperature Sensors," *Control Engineering*, November 1991.

Stockham, R., "Temperature Transmitters Take the Lead Over Direct Wiring," *Control and Instrumentation*, Product Survey Directory, 1999.

Tinsley, F.G. and Adams, B., "Evolution in the Application of Optical Fiber Thermometry," Paper #91-0308, Instrumentation, Systems, and Automation Society Conference, Toronto, 1991.

Volbrecht, A. and Gordon, W., "Temperature Measurement: Making Sense of it All," *Sensors*, June 1998.

Warren, C., "Radiation Thermometry," *Measurements and Control*, February 1991.

Wickersheim, K. and Sun, M., "Phosphors and Fiberoptics Remove Doubt from Difficult Temperature Measurements," *Research and Development*, Vol. 14, November 1986.

Wohlstein, S., "Fiberoptics," *Measurements and Control*, September 1991.

Wolfe, W.L., *The Infrared Handbook*, U.S. Government Printing Office, Washington, D.C., 1978.

© 2003 by Béla Lipták

4.10 Resistance Temperature Detectors

T. J. CLAGGETT, R. W. WORRALL (1969) **W. A. CLAYTON** (1982)
B. G. LIPTÁK (1993, 2003)

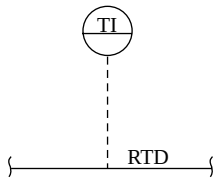

Flow Sheet Symbol

Applications:	Industrial and laboratory thermometry including the definition of the International Temperature Scale between the oxygen and antimony points, from –297 to 1167°F (–183 to 631°C)
Alpha Curve:	The relationship between the resistance change of a resistance temperature detector (RTD) vs. temperature. In the European alpha curves, the alpha value is 0.00385 Ω/°C; in American curves it is 0.00392.
Ranges:	–328 to 1532°F (–200 to 850°C) is IEC standard for platinum RTDs and –330 to 600°F (–200 to 320°C) for nickel RTDs, Practical applications are usually limited to –328 to 1000°F (–200 to 537°C) (refer to Tables 4.10b and 4.1c).
Spans:	10 and 1100°F (6 and 610°C) for platinum, and 20 and 600°F (12 and 340°C) for nickel. For differential temperature transmitters: 10 and 50°F (6 and 28°C) for platinum, and 20 and 100°F (12 and 56°C) for nickel.
Stability:	Zero and span drift is usually within 0.1% of span for a 6-month period (and frequently longer).
Standard Resistances:	100 Ω at 32°F (0°C) is most common, but elements are available from 10 to 1000 Ω.
Linearity:	Platinum and copper are more linear; nickel and nickel/iron (Balco™) are less so. The use of gold and silver RTDs is limited to cryogenic temperatures.
Sensitivity:	0.1 to 10 Ω/degree
Inaccuracy:	The error just for a Class A sensors is from ±0.06°F (±0.03°C) or 0.01% of span and for a Class B sensor it is from ±0.6°F (±0.3°C) or 0.12%. In determining the total system error, one must also consider the error contribution of the signal conditioning electronics. The total system error is usually 0.15% of span for platinum and 0.25% of span for nickel RTD elements in standard transmitters. Intelligent transmitters reduce that to 0.05% of span or to about 0.18°F (0.1°C), whichever is higher.
Costs:	Elements alone range from about $35 to $80; RTD assemblies, including thermowells, are from $100 to $250. An RTD sensor with an integral temperature transmitter may cost anywhere from $300 to $2000 depending on its level of intelligence and other features.
Partial List of Suppliers of Intelligent Transmitters:	ABB (www.abb.com) Foxboro/Invensys (www.foxboro.com/temp/) Honeywell (www.iac.honeywell.com/ichome) Kamstrup (www.kamstrup-process.com) Moore Industries-International, Inc. (www.miinet.com/products/ca) Rosemount/Emerson (www.rosemount.com/products) Siemens (www.sea.siemens.com) Yokogawa (www.yokogawa.com)

© 2003 by Béla Lipták

Partial List of Suppliers:

4B Components Ltd. (www.go4b.com)
ABB Inc. Instrumentation (www.abb.com/us/instrumentation)
Accutech (www.savewithaccutech.com)
Altech Industries Corp. (www.altekcalibrators.com)
Analab LLC (www.analab1.com)
Analogic Corp. (www.analogic.com)
Anderson Instrument Co. (www.andinst.com)
APT Instruments (www.aptinstruments.com)
ARI Industries (www.ariindustries.com)
Athena Controls (www.athenacontrols.com)
Barber Colman (www.barber-colman.com)
Barnant Co. (www.barnant.com)
Bently Nevada Corp. (www.bently.com)
Bristol Babcock (www.bristolbabcock.com)
Burns Engineering (www.burnsrtd.com)
Chino Works America (www.chinoamerica.com)
CMI Inc. (www.cmi-temp.com)
Conax Buffalo (www.conaxbuffalo.com)
Dickson (www.dicksonweb.com)
Durex Industries (www.durexindustries.com)
Dwyer Instruments (www.dwyer-inst.com)
Ecom Instruments (www.ecom-ex.com)
Endevco Corp. (www.endevco.com)
Enraf Inc. (www.enrafinc.com)
Eurotherm Controls (www.eurotherm.com)
Flow Research (www.flowresearch.com)
Flow-Tech Inc. (www.flowtechonline.com)
Fluid Components (www.fluidcomponents.com)
FMC Blending & Transfer (www.fmcblending.com)
Foxboro-Invensys (www.foxboro.com)
Gaumer Process (www.gaumer.com)
General Eastern (www.geinet.com)
GMC Instruments (www.gmcinc.com)
Graybar Electric (www.graybar.com)
Honeywell Sensing and Control (www.honeywell.com/sensing)
Ice Qube Inc. (www.iceqube.com)
ifm efector (www.ifmefector.com)
Instrumentation Group (www.instrumentationgroup.com)
iSensors Corp. (www.isensors.com)
JMS Southeast (www.jms-se.com)
Jumo Process Control (www.jumousa.com)
Kobold Instruments (www.koboldusa.com)
Lake Shore Cryotronocs (www.lakeshore.com)
Love Controls (www.love-controls.com)
Marsh Bellofram (www.marshbellofram.com)
Martel Electronics (www.martelcorp.com)
Minco (www.minco.com)
Moore Industries-International, Inc. (www.miinet.com)
MTI (www.mtisensors.com)
National Basic Sensor (www.nationalbasicsensor.com)
Newport Electronics (www.newportusa.com)
Omega (www.omega.com)
Pyromation (www.pyromation.com)
Pyrometer Instrument (www.pyrometer.com)
RDF Corp. (www.rdfcorp.com)
Ronan Engineering (www.ronan.com)
Rosemount Inc., Div. of Emerson (www.rosemount.com)
Sandelius Instruments (www.sandelius.com)
Selco Products (www.selcoproducts.com)
Senso-Metrics (www.senso-metrics.com)
Spence Engineering (www.spenceengineering.com)

© 2003 by Béla Lipták

Thermo Electric (www.thermo-electric.com)
Transcat (www.transcat.com)
Transmation (www.transmation.com)
TSI Inc. (www.tsi.com)
TTI (www.ttiglobal.com)
Truck (www.truck.com)
United Electric Controls (www.ueonline.com)
Validyne (www.validyne.com)
Watlow (www.watlow.com)
Weed Instrument (www.weedinstrument.com)
Wilkerson Instrument (www.wici.com)
Winters Instruments (www.winters.com)
Yokogawa Corp. of America (www.yca.com)
Vendor list: (www.temperatures.com/rtdvendors.html)
Most popular: Rosemount-Emerson, Pyromation, Omega

In 1821 Sir Humphry Davy discovered that the resistivity of metals depends on their temperature. The application of this property using platinum was first described by Sir William Siemens at the Bakerian Lecture of 1871 before the Royal Society in Great Britain. The necessary temperature limitations and methods of construction were established by Callendar, Griffiths, Holborn, and Wein between 1885 and 1900.

RESISTANCE TEMPERATURE DETECTOR BASICS

Resistance thermometry is based upon the increasing electrical resistance of conductors with increasing temperature (Figure 4.10a). Resistance temperature detector (RTDs) are constructed of a resistive material with leads attached and usually placed into a protective sheath. The resistive material may be platinum, nickel, or copper, with the most common by far being platinum. Platinum resistance thermometers are now the international standard for temperature measurements between the triple point of hydrogen at 24.86°R (13.81 K) and the freezing point of antimony at 1167.35°F (630.75°C). The laboratory application of platinum resistance thermometers recognizes the unsurpassed stability and repeatability of this noble metal sensor. Platinum resistance thermometers for rugged industrial applications also retain their advantage over other conductors.

Detectors and Their Applications

The conductors used for resistance thermometry include platinum, nickel of various purities, 70% nickel/30% iron (Balco), and copper, listed in order of their decreasing temperature range (Tables 4.10b and 4.1c). These conductors are all available as fine wire for sensor winding. For many years wire-wound construction, where a fine highly purified platinum wire was wound around a ceramic mandrel to

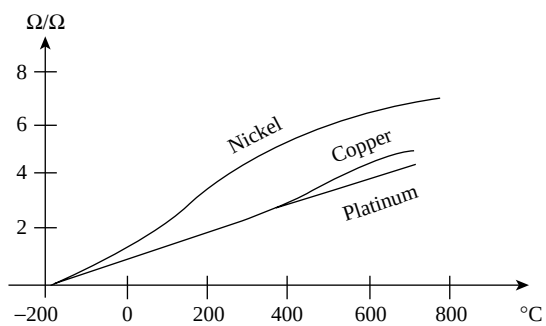

FIG. 4.10a
The temperature coefficient of platinum is 0.00392 ohms/ohms°C at 0°C (the alpha value in the USA) and 0.00293 at 800°C. The alpha value used in Europe is the average value between 0 and 100°C, which is 0.00385. Therefore (as shown), a platinum element of 1 ohm resistance at –200°C will increase its resistance to approximately 4.0 ohm as the temperature rises to 800°C.

TABLE 4.10b
RTD Material Properties of 0°C and Available Temperature Ranges

Metal	*Temperature Coefficient of Resistance (Ohms/Ohm°C)*	*Electrical Resistance Per Circular Mil Foot (Ohms)*	*Commercially Available Temperature Ranges °F (°C)*
Platinum	0.00392	59.00	–328 to 1532 (– 200 to 850)
Nickel	0.00672	36.00	–330 to 600 (–196 to 316)
Copper	0.0038	9.26	–320 to 250 (–196 to 120)
Tungsten	0.0045	30.00	—
Gold	0.0040	13.00	—
Silver	0.0041	8.80	—

© 2003 by Béla Lipták

produce the element, was the most common type. Wire-wound sensors are still the better choice for very high, very low, or widely cycling applications.

Platinum is also available as a deposited film sensor, which is much less expensive, and platinum, nickel, and Balco are all available in foil-type sensors. Thin film construction uses a precision laser to cut the sensor elements from a layer of platinum deposited over a stable ceramic base material. The sensor has very low mass and is therefore highly resistant to vibration and has a much faster speed of response than a wire wound sensor. All share in varying degrees the characteristics of repeatability, high temperature coefficient, long-term stability, and linearity over a useful temperature range. While no sensor material surpasses platinum in overall performance, each has at least one characteristic that may encourage its selection.

The application of the standard platinum RTD as a temperature standard (SPRT), differs considerably from industrial practice.[1] The temperature standard is 25.5 Ω at the ice point to stay within the range of practical Mueller bridges while providing a nominal 0.1 Ω/°C sensitivity. Wire-type platinum thermometers were constructed in a manner to be almost totally strain-free, using very lightly supported wire of larger size (and cost) than typical in an industrial thermometer (Figure 4.10c).

Temperature coefficients near the theoretical maximum for pure platinum and maximum thermal stability can be obtained at the expense of fragility and large size. The industrial platinum RTD offers ruggedness at a negligible loss in temperature coefficient compared to the standard SPRT, while retaining the best stability and repeatability available in industrial thermometers over a wide temperature range.

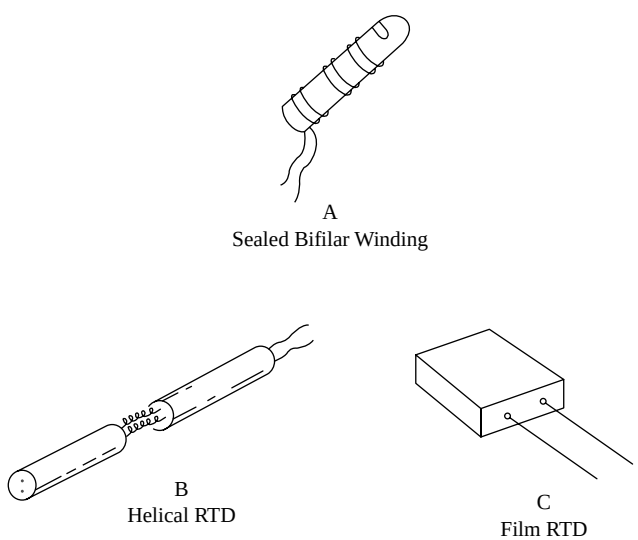

Fig. 4.10c
RTD elements can be made by winding platinum wire on a glass or ceramic bobbin and sealing with molten glass (A), by threading a platinum helix through a ceramic mylinder (B), or by depositing a platinum film on a ceramic substrate. (A) is limited by the strain induced at higher temperatures, (B) is not suited for extreme vibration, and (C), while small, fast, and inexpensive, is also less stable than the others.

INDUSTRIAL RTD CONSTRUCTION REQUIREMENTS

All resistance thermometers require the following considerations in their manufacture. Wire-wound sensors must be supported on mandrels closely matching the wire in thermal expansion to minimize strain effects. Additional assembly materials, such as cements, should not introduce additional strain in the operating temperature range. The final assembly must be in a stable, annealed condition, trimmed to the required resistance tolerance. Only high-purity materials and clean assembly methods should be used to avoid sources of contamination that might degrade the sensor.

All internal connections should be welded, and connecting leads should be chosen for the required temperature capability and avoidance of thermoelectric junctions. To realize the ruggedness of fully supported elements in the total sensor assembly, all internal connections should be anchored and isolated from effects of thermal and mechanical strains, including shock and vibration. The same requirements apply when deposited film or foil-type resistance elements are used (Figure 4.10c).

For equivalent performance in their respective temperature ranges, base metal RTDs cost the same as 100 ohm platinum RTDs. Construction requirements and materials cost are similar. Base metal RTDs have a materials cost advantage at higher resistance values compared to wire-wound platinum sensing elements. Thin film platinum elements erase this advantage.

Platinum RTDs

In the case of platinum RTDs, the full supported rugged construction using "reference grade" wire has a temperature coefficient (alpha) over the interval 32 to 212°F (0 to 100°C of between 0.00387 and 0.003915 Ω/Ω°C, depending on the manufacturer. Compared to 0.003927 Ω/Ω°C on a SPRT, the reduction in sensitivity is insignificant. For best accuracy, the user should be aware of or specify the actual temperature coefficient. One common value available from most manufacturers is 0.003902 Ω/Ω°C. This is the result obtained for windings on pure alumina mandrels.

The relationship between the resistance change of an RTD vs. temperature is referred to as its alpha curve. The most commonly used is the European curve that has an alpha of 0.00385 Ω/Ω°C. The American curve has an alpha of 0.00392 Ω/Ω°C. The instrument used with the RTD must be configured to use the same alpha curve as the RTD or serious errors will occur.

Standard platinum industrial alpha curves (based on slightly doped platinum wire) have been adopted by most European countries. These curves are all substantially based on an alpha of 0.00385 Ω/Ω°C. This result is reproducible by manufacturers everywhere, and the so-called international grade platinum curve is the most widely used curve,

© 2003 by Béla Lipták

even in the United States. An exception is temperatures below –320°F (–196°C) (LN2), where only reference grade wire RTDs are well characterized.

Platinum RTDs using thick or thin films are also available to the same curve as international grade wire-wound sensors. Performance is often equivalent to wire-wound sensors except maximum temperature may be reduced. Wire-wound platinum RTDs are most common at 100 ice point resistance, with 200 and 500 Ω available at additional cost. Using thin films, ice point resistances of 100 and 1000 Ω are available at the same cost with slightly lower alpha specified at 1000 Ω.

Base-Metal RTDs

Second in usage to platinum is high-purity nickel, which offers the highest temperature coefficient, second-highest temperature range, and lower assembled cost than wire-wound platinum at high resistance values. Nickel RTDs have declined in use over the years primarily due to their limited range vs. the more popular platinum RTDs.

The useable range is –112 to 608°F (–80 to 320°C). Most transmitters and alarm trips still offer the capability to accept nickel RTD inputs. The most common are 120 and 500 Ω resistance, with 1000 Ω available. Nickel is not linear, because it increases its temperature coefficient as temperature rises (Figure 4.10a). Nickel is also highly strain-sensitive and requires great care by the manufacturer to obtain good interchangeability. The temperature coefficient of nickel is highly influenced by both purity and state of anneal. In addition, lower purity nickel, such as 99% nickel (no longer available) or ballast nickel, has been used and provides a somewhat lower temperature coefficient.

The maximum temperature of nickel sensors should not be much more than 500°F (260°C). There is no internationally recognized standard curve for nickel sensors, although there are national standards, and several manufacturers in the United States can provide sensors to a common curve characterized by an alpha temperature coefficient between 32 and 212°F (0 and 100°C) of 0.00672 Ω/Ω°C.

Balco Third in usage is the 70% nickel/30% iron alloy trade named Balco. The sole basis for its use is a very high specific resistance, which makes possible the production of very high resistance windings without increasing size. Ice point resistances are commonly 200 or 10,000 Ω. It has the second-highest temperature coefficient, third-highest temperature capability, and, like pure nickel, is nonlinear with an upward bending R vs. T curve. There is no recognized standard curve for Balco sensors.

Copper Last in usage is pure copper, which is generally available only at 10 or 100 Ω ice point resistance values due to the low specific resistance of the winding wire. Copper RTDs are most commonly used to sense the winding temperature of motors, generators, and turbines. Connecting them to an alarm trip provides an over-temperature shut down function. Historically 10 Ω copper RTDs were the norm, but many users have now opted for 100 Ω or even 1000 Ω units to get higher resolution. They have a useful range of –58 to 482°F (–50 to 250°C).

Copper's temperature coefficient is almost the same as platinum and it is very linear above the ice point. Copper in bifilar windings (Figure 4.10c) is used in electrical machinery due to very low inductive or capacitive reactance, but platinum can also be used. Some traditional applications have also exploited the linearity of copper sensors in making narrow-range temperature-difference measurements where two sensors are connected on opposed arms of a bridge. There is no internationally recognized standard curve for copper, although some national standards do exist.

Relative performance of industrial temperature sensors of all types is shown in Table 4.10d. RTDs, especially platinum RTDs, are clearly superior for temperature measurement requirements below 1000°F (540°C).

MEASURING THE RTD RESISTANCE

By measuring the resistance of the RTD element one can determine the process temperature if the change in total resistance measured is affected by nothing but the process temperature. In actual installations, the RTD element is connected by two, three, or four lead wires to the readout or transmitting instrument.

Two-Wire RTDs

There are very few applications for a two-wire RTD since the error introduced by the leads can cause significant error. If a null-balance bridge is used, the circuit can be as shown in Figure 4.10e. Here the temperature coefficients of resistors R_1, R_2, and R_3 are nearly zero, and the value of R_3 is adjusted until the current flow of G or the voltage read by a digital voltmeter (DVM) is zero. Under these conditions the value of R_3 equals the unknown resistance of the measuring leg (A + B + RTD).

Assuming that the resistance of the RTD (at 0°C) is 100 Ω and assuming that the element is platinum, the resistance of the 100 Ω RTD elements will change by 0.385 Ω/°C. If 500 ft (152 m) of 20 gauge copper lead wire was used to connect the RTD to the bridge, this adds 10 Ω to the total resistance (5 Ω/leg). At null balance R_3 = A + B + RTD = 10 Ω + RTD. With a temperature coefficient of 0.385/°C these extra 10 Ω will contribute a measurement error (as an increase in process temperature) of 10/0.385 = 26°C.

The previous example illustrates the relatively large lead-wire error in a two-wire RTD installation, and for this reason such installations are not used if accurate temperature measurement is desired and the length of the lead wires is more than a few inches. When the transmitter is mounted directly on the thermowell (Figure 4.10f), the lead-wire length is so small that the resulting error is not very significant. Yet even

© 2003 by Béla Lipták

TABLE 4.10d
Comparison Chart of Various Temperature Sensors

Evaluation Criteria	*Platinum RTD 100 Ω Wire Wound and Thin Film*	*Platinum RTD 1000 Ω Thin Film*	*Nickel RTD 1000 Ω Wire Wound*	*Balco RTD 2000 Ω Wire Wound*	*Thermistor*	*Thermocouple*	*Semi-conductor Devices*
Cost-OEM Quantity	High	Low*	Medium	Medium	Low*	Low*	Low*
Temperature Range	Wide –400°F to +1200°F (–240°C to +649°C)*	Wide –320°F to +1000°F (–196°C to +538°C)*	Medium –350°F to +600°F (–212°C to +316°C)	Short –100°F to +400°F (–73°C to +204°C)	Short to Medium –100°F to +500°F (–73°C to +260°C)	Very Wide –450°F to +4200°F (–268°C to +2316°C)**	Short –57°F to +257°F (–49°C to +125°C)
Interchange-ability	Excellent*	Excellent*	Fair	Fair	Poor to Fair	Good*	Fair
Long-Term Stability	Good*	Good*	Fair	Fair	Poor	Poor to Fair	Good to Fair
Accuracy	High*	High*	Medium	Low	Medium	Medium	Medium
Repeatability	Excellent**	Excellent**	Good*	Fair	Fair to Good	Poor to Fair	Good*
Sensitivity (Output)	Medium	High*	High*	Very High**	Very High**	Low	High*
Response	Medium	Medium to Fast*	Medium	Medium	Medium to Fast*	Medium to Fast*	Medium to Fast*
Linearity	Good*	Good*	Fair	Fair	Poor	Fair	Good*
Self-Heating	Very Low to Low*	Medium	Medium	Medium	High	N/A	Very Low to Low*
Point (End) Sensitive	Fair	Good*	Poor	Poor	Good*	Excellent**	Good*
Lead Effect	Medium	Low*	Low*	Low*	Very Low**	High	Low*
Physical Size/Packaging	Medium to Small	Small to Large*	Large	Large	Small to Medium	Small to Large*	Small to Medium

**Best Rating
*Good Rating

in these configurations most suppliers will provide a three-wire RTD to minimize the lead-wire error.

Three-Wire RTDs

Measurement circuits that accept three-wire inputs minimize the effects of lead wire resistance as long as the outer legs are equal. However factors such as terminal corrosion and loose connections can still create significant differences between the lead resistances seen by the measurement circuit, because only one ohm of difference between the legs results in an error of 4.7°F (2.6°C).

As shown in Figure 4.10g, the lead wire C acts as a sense lead and is part of both halves of the bridge and therefore cancels out at balance. The lead wires A and B are in different halves of the bridge and therefore at null balance $R_3 = B - A + RTD$. Therefore, now the lead-wire error is no longer the total lead resistance (A + B), but only the difference between their resistances (B – A).

This is a major improvement in reducing the lead-wire error and is sufficient for the needs of most industrial applications where the lead-wire lengths are short. However, it is not a complete solution because wire resistances are guaranteed only within a 10% tolerance; therefore, if A and B are identical wires of identical lengths, their resistances can still differ within the 10% tolerance. So if nominally they both are 5 Ω, in reality one could be 4.5 and the other 5.5 Ω. If this were the case, the difference of 1 Ω would still introduce an error. With a 100-Ω platinum RTD that error would correspond to 1/0.385 = 2.6°C.

If the purpose of the temperature measurement is to calculate the exothermic heat release of a batch reactor, this error might still be too much. In that application the temperature rise through the reactor jacket is about 5°F and the span usually selected for the differential temperature transmitter is 10°F (5.6°C). In order to identify the end point accurately, the total heat release must be determined to within 0.5% maximum error. Because the total heat release is calculated

© 2003 by Béla Lipták

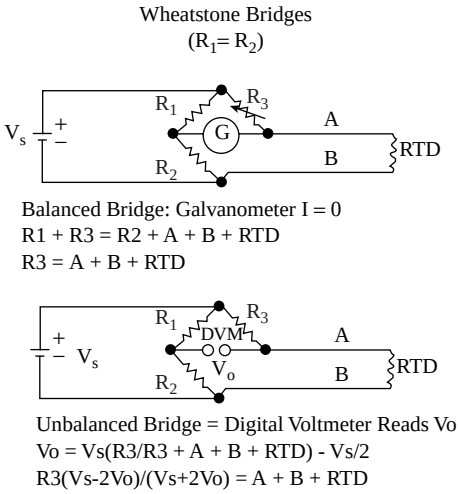

FIG. 4.10e

Null-balance bridge-type two-wire RTD installations showing a galvanometric (G) readout in a balanced condition (left) and a DVM readout in an unbalanced condition (right) where the DVM reads V_0 volts.

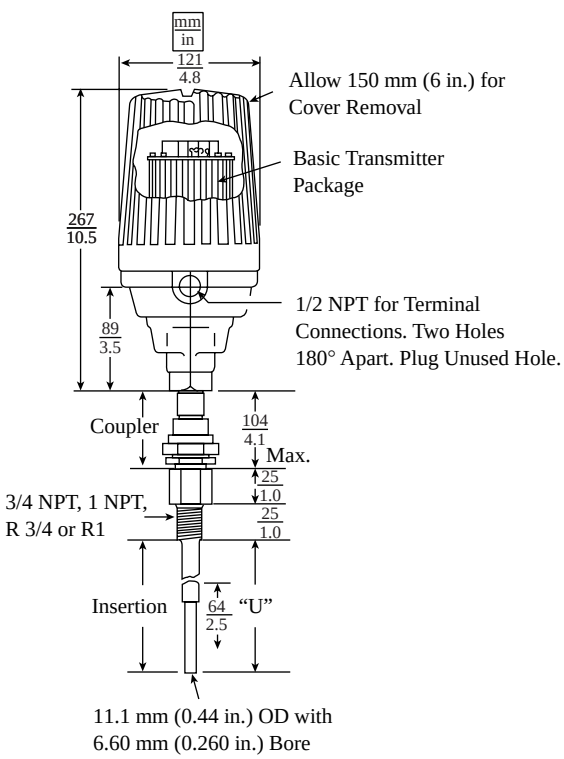

FIG. 4.10f

RTD transmitter mounted directly on thermowell. (Courtesy of The Foxboro Co.)

by multiplying coolant flow with its temperature rise, the flowmeter itself will contribute 0.25% in error and therefore one must measure the temperature rise within 0.25%.

An error of 0.25% over an *actual* measurement of 5°F is 0.0125°F (0.007°C). This is such a small error limit that even

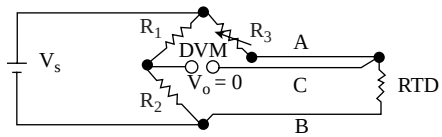

When bridge is balanced: R1 + R3 + A + C = R2 + B + RTD + C
If R1 = R2 this becomes: R3 = RTD + B + A = RTD

FIG. 4.10g

In a three-wire null-balance bridge, the lead-wire effect is reduced to the difference between the resistances of the two lead wires (B – A).

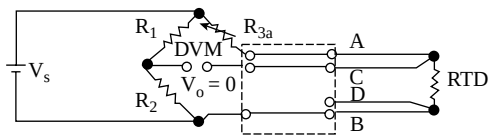

Switch in Position "A"

R1 + R3a + A + C = R2 + B + RTD + C
When R1 = R2:
R3a + A = B + RTD

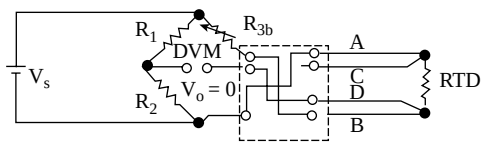

Switch in Position "B"

R1 + R3b + B + D = R2 + A + RTD + D
When R1 = R2:
R3b + B = A + RTD

FIG. 4.10h

If the leads of a four-wire null-balance bridge are switched as shown and the resulting two equations are added up, the lead-wire effects are eliminated and the resistance of RTD = (R_{3a} + R_{3b})/2.

three-wire RTD transmitters may not meet it (their usual error limit is about 10 times higher). For this reason, in laboratory situations or for other high-precision measurements, one might consider the use of four-wire systems, which completely eliminate the lead-wire effect.

Four-Wire RTDs

Using a four-wire measuring circuit eliminates the above problem. The design engineer should consider any of the leading brands of temperature transmitters that accept four-wire RTD inputs. Direct connection to remote devices with three-wire extension cable will often produce errors that can be significant and will vary with environmental conditions.

Four-wire RTDs can be connected either to a null-balance bridge or to a constant current source. Both will be described here. Figure 4.10h illustrates a four-wire null-balance bridge. It operates by switching a triple-pole double-throw switch and making alternate null-balance measurements in the two configurations. In one configuration, lead A is measured together with the RTD resistance, while in the other configuration it is

© 2003 by Béla Lipták

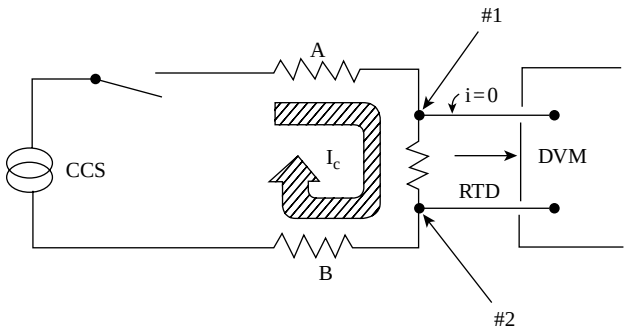

FIG. 4.10i
Offset compensated four-wire RTD measurement using CCS and DVM as readout.

lead B, so they cancel out *completely* and the actual value of the RTD resistance is determined as $(R_{3a} + R_{3b})/2$.

Microprocessors and advanced electronics make it feasible to provide this level of sophistication, but complexity still costs money, so these designs are relatively expensive; in addition, they are still limited by contact resistance considerations. Even the best (gold-plated) switching contacts contribute some contact resistance. The difference between these resistances does introduce some miniscule errors whenever one uses a switching configuration to make a resistance measurement.

Another way to eliminate the lead-wire error is to use a constant current source (CCS) in a four-wire RTD configuration. These miniaturized CCS packages are available at relatively low costs and provide an accurately constant current flow of about 2 mA or less to avoid self-heating errors. As shown in Figure 4.10i, in this configuration the bridge itself is replaced by a DVM, which measures the resistance of only the RTD and is insensitive to lead-wire effects as there is no current flow through the connecting wires. The source lead resistances (A and B) contribute no error because the voltage drop is not measured along them.

For the maximum in precision, it would be prudent to make sure that the current flow (I_c) through the RTD is constant and that the DVM does draw any current ($i = 0$), and also to cancel out the thermocouple (TC) junction voltages at points #1 and #2. This is necessary because as the two wires (platinum RTD and copper lead) at #1 and #2 form TC junctions, the millivoltages they generate will also be registered by the DVM. This effect is eliminated by offset compensation. The offset voltage generated by the unintended TC junctions is measured by the DVM when the CCS circuit is opened and, therefore, $I_c = 0$. The smart RTD readout memorizes the voltage sensed when no current is flowing and corrects the total reading by that amount when the CCS is connected and I_c is about 2 mA.

In general, two-wire RTDs are only used in heating, ventilation, and air conditioning (HVAC)-type secondary applications, three-wire RTDs are still used in some processing industries, and four-wire RTDs are used in most high-precision services or in the laboratory.

SENSOR CONSTRUCTION

Figure 4.10c illustrates some of the RTD sensor elements. The most popular industrial designs are fully encapsulated. In these units a 0.001 in. (0.025 mm) diameter or smaller platinum wire is wound into a coil and is inserted in the multiple bores of a ceramic tube or is wound directly on the outside of a ceramic tube. The ceramic material is usually 99.7% pure aluminum oxide, and the winding is completely embedded and fused onto or into the tube. The RTD thermometers are in direct competition with TCs and therefore are available with the same features.

The elements are manufactured with a protective sheath that provides a hermetic seal to protect the sensor from moisture and/or contamination. These protective sheaths are offered in a variety of lengths to provide the proper insertion into the process to obtain a representative measurement. The sheathed elements are often installed into a protective well to isolate the sensor from the process. One manufacturer offers a universal model that has a 1-in.-long sheath but is provided with long leads within a spiraled spring (Figure 4.10j). The leads can be cut in the field to fit the length of the thermal well, reducing the requirement for stocking a variety of sensors in varying lengths.

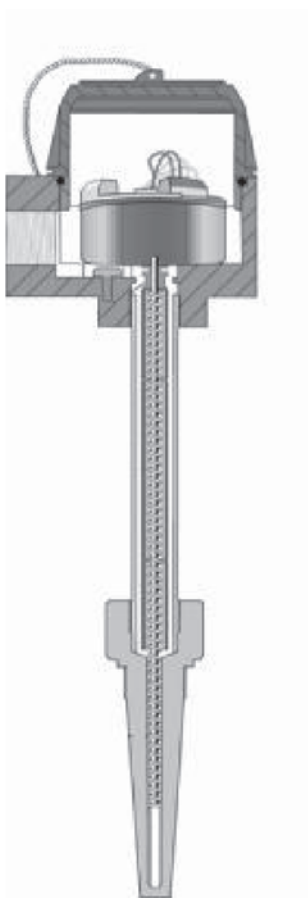

FIG. 4.10j
RTD transmitter with a 1 in.-long sheath element and with long leads within a spiraled spring, which can be cut to match the thermowell length. (Courtesy of Moore Industries-International, Inc.)

© 2003 by Béla Lipták

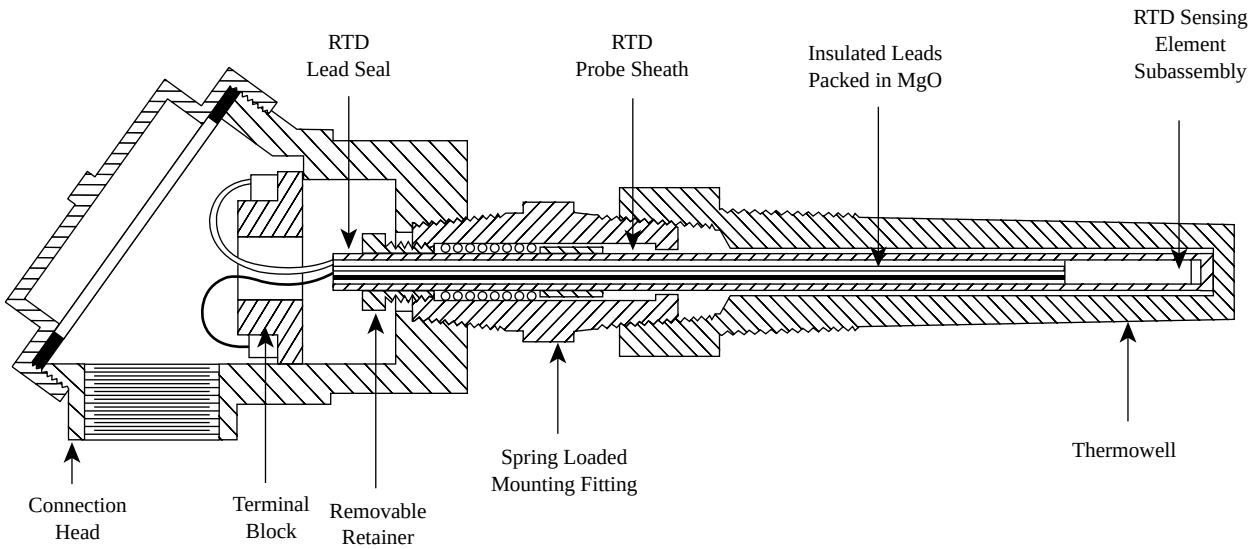

FIG. 4.10k
Industrial RTD/thermowell assembly.

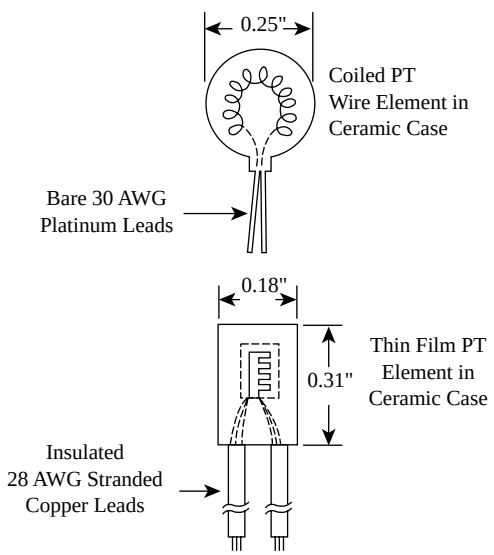

FIG. 4.10l
RTD surface temperature sensors.

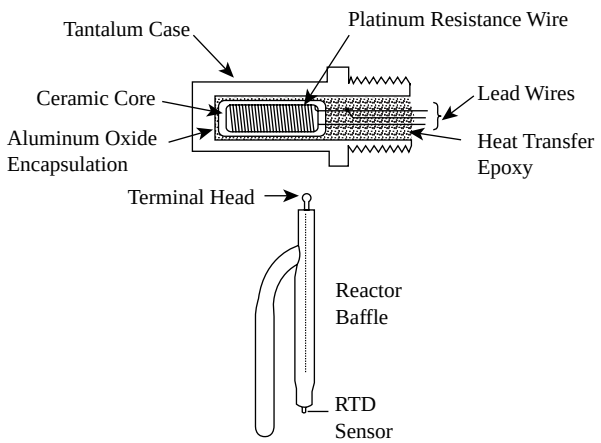

FIG. 4.10m
RTD sensor for glass-lined reactors. (Courtesy of Pfaudler.)

Thermowells

Figure 4.10k illustrates a conventional industrial RTD sensor provided with a protective thermowell and fixed length leads. Figure 4.10l shows two designs of surface-temperature-sensing RTDs. Other surface mounting configurations are illustrated in Figures 4.1t and 4.1v. The packaging of the RTD sensor depends on the application. For example, the measurement of temperature inside glass-lined chemical reactors requires special configurations. Figure 4.10m shows an RTD element that can be installed either through the bottom discharge valve of the reactor or at the tip of the reactor baffle. The 63.2% response time to a step change is about 7.5 s; the 95% response time is about 28 s.

One limitation of the early RTDs (relative to TCs) was size. RTDs tended to be relatively bulky, because in order to obtain the required resistance (usually 100 Ω), the length of the sensor wire must be relatively long, frequently several feet. This limitation has been overcome by the film-type designs (Figure 4.10c), which are suited for miniaturization.

The 63.2% time constants of different RTDs (without thermowells) are given in Figure 4.10n. One might approximate the time constant of the final assembly by doubling the time constants for each layer of material added in the process of installation.

Installation

In terms of installation, RTDs require the same precautions as TCs. The best installation practice is to place all electronics directly on top of the thermowell (Figures 4.10f and 4.10j)

© 2003 by Béla Lipták

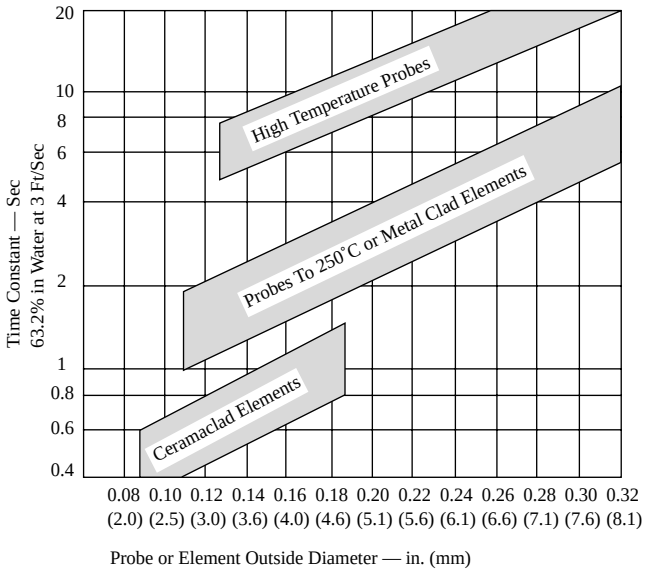

FIG. 4.10n
Response time of typical resistance temperature sensor.

and thereby eliminate lead-wire and noise effects. If for some reason this cannot be done, the lead wires should be twisted and shielded; the wires should also not be stressed, strained, or made to go through steep gradients. The extension wire should be low resistance (large diameter), and the readout instrument should be guarded.

For further discussions on the general topics of surface and solids temperature measurement, refer to Section 4.1 and Figures 4.1t and 4.1v.

TRANSMITTERS

The typical performance capabilities of different RTD transmitters are summarized in Table 4.10o. In general, platinum sensors provide better accuracy and less span shift than do nickel elements. Also, while intelligent transmitters give better performance than do standard ones, they too are limited to a minimum error of about 0.18°F (0.1°C). Table 4.10o also shows that the smart transmitters that have digital outputs provide better performance.

Intelligent Transmitters

In addition to having improved performance, intelligent transmitters are capable of working with any one of eight types of TC or two types of RTD elements. This increases their flexibility and reduces the need for spare parts. The intelligent transmitters are also provided with continuous self-diagnositcs and with automatic three-point self-calibration, which is performed every 5 s and does not interrupt the analog or digital output of the unit.

A transmitter includes an input circuit referred to as an analog-to-digital (A/D) converter that converts the sensor input signal from its analog form into a digital representation for presentation to the microprocessor. The microprocessor performs all of the mathematical manipulations of ranging, linearization, error checking, and conversion. The output stage accepts the resultant digital representation of the current value of the measurement and converts the signal back to an analog signal (D/A) that is typically a 4–20 mA DC current. For some special applications, 0–1 or 0–10 V DC signals may be used and in others the signal is transmitted digitally using either an open or proprietary protocol. Some countries have adopted 020 mA as the standard transmitted signal.

The intelligent RTD transmitter can also be furnished with dual RTD elements that can be used to measure temperature differentials, averages, or high/low sensors, or used as redundant backup elements. This capability also allows for automatic RTD sensor switchover if the primary sensor fails in a redundant installation. Due to terminal

TABLE 4.10o
*Performance Capabilities of Standard and "Smart" RTD Transmitters**

	STANDARD		*SMART*	
Performance Criteria	*Platinum Element*	*Nickel Element*	*Digital Output*	*Analog Output (4–20 mA DC)*
Inaccuracy	±0.15% or ±0.15°F (0.08°C)	±0.25%	±0.035% or ±0.18°F (0.1°C)	±0.05% or ±0.18°F (0.1°C)
Repeatability	±0.05%	±0.05%	±0.015% or ±0.18°F (0.1°C)	±0.025% or ±0.18°C (0.1°C)
Zero Shift/6 mo.	±0.1%	±0.2%	±0.06% R or 0.18°F (0.1°C)	±0.1% R or 0.18°F (0.1°C)
Span Shift/6 mo.	±0.1%	±0.4%		
Supply Voltage Variation	±0.2% or 0.02°F (0.01°C)		—	(0.005%)/Volt
Ambient Effect (100°F or 55°C)	±0.75%		Included above	±0.1%

*When two values are given the error is the higher of the two. When % is given it refers to % of span or % of calibrated span, except if %R is shown, which means % of actual reading.

© 2003 by Béla Lipták

limitations, these models can only accept dual three-wire RTDs. Caution must be used to minimize lead resistance differences to reduce the error. Another convenient feature of smart transmitters is their remote reconfiguration capability, which can change their zero, span, or many other features without requiring rewiring.

The common features of the leading temperature transmitter models are: universal inputs from any TC, RTD, mV, resistance or potentiometer; loop-powered with 0–20/4–20 mA output; digital outputs; and configuration with push buttons, personal computer (PC) software, or a handheld configurator. Choices must be made for which protocol is required: Highway Addressable Remote Transducer (HART), Foundation Fieldbus, Profibus, vendor proprietary, Ethernet, or just 420 mA.

A/D Converters, Digital Protocols

Just as microprocessors have evolved in sophistication, so have A/D converters. Eight-bit resolution devices common in the 1960s provided a resolution of about ±0.4%. In the year 2000 the first 21-bit resolution A/D was used in a temperature transmitter providing a resolution of ±0.00005%. D/A converters have also evolved with resolutions increasing from 8-bit up to the 18-bit versions used in the better transmitters beginning in 2000.

The result of combining these technologies is a universal transmitter that accepts inputs from any TC, RTD, mV, resistance or potentiometer signal; checks its own calibration on every measurement cycle; has minimal drift over a wide ambient temperature range; incorporates self-diagnostics; and is configured using push buttons or simple PC software. The reconfiguration process is quick and convenient, and it tends to allow for lower inventories by making the transmitters interchangeable.

In the 1980s Rosemount developed the HART protocol to enable detailed information about the set-up and operation of the device to be superimposed onto the 4–20 mA signal. During this same time period a variety of proprietary protocols emerged supported by many of the larger manufacturers that provided comparable benefits of remote setup and diagnostics. Unlike the HART protocol, these products were limited to use within the manufacturer's system. In the 1990s a trend emerged for more open protocols and Foundation Fieldbus and Profibus evolved the leaders of these groups.

ADVANTAGES AND LIMITATIONS

RTDs are among the most accurate, reproducible, stable, and sensitive thermal elements available. Some of the precision platinum RTDs can measure within a few thousandths of a degree, and this precision is the reason such instruments are used to define parts of the International Temperature Scale (ITS-90.)

Other advantages include their relatively good sensitivity (0.1 to 10 Ω/°F) and their ability to use conventional copper lead wire (instead of more expensive TC wire). An advantage of copper RTDs is that since both the element material and the lead-wire material are the same, the TC effect is minimized at their junction. Another advantage of RTDs is the convenience of using a single bridge to measure the temperature difference between two RTDs.

A concern common to all RTDs is the error produced by self-heating. Measuring the voltage across an RTD produced by passing a precise current flow through the RTD produces heat that will appear as a positive offset over the actual process temperature. The size of this error rises with RTD size and its resistance. It can be reduced by improving heat transfer and by minimizing or eliminating (null-balance) the current flow through the RTD. The lower is the measuring current; the less is this self-heating effect. It is reduced by good thermal contact with the process fluid and when measuring higher temperatures. Circuits in better transmitters use about 250 μA.

Other disadvantages of RTDs include their higher cost, more fragile construction, and larger size, relative to TCs. Because of their size, their thermal response time is also relatively slow (Figure 4.10n). Errors can be introduced if the RTD insulation resistance is affected by moisture being sealed in the sheath or by contact between element and sheath. Some RTDs are more vibration-sensitive than others. RTDs are also dependable for their precision on stable (insensitive to temperature changes) and constant resistances and power supplies in the associated bridges.

Reference

1. Riddle, J.L., Furukawa, G.T., and Plumb, H.H., "Platinum Resistance Thermometry," *NBS Monograph*, 126, 1973.

Bibliography

Adler, C.B., "Reliability Aspects of Temperature Measurement," Instrumentation, Systems, and Automation Society Conference, Chicago, 2001.

American Petroleum Institute, Manual Number API RP 550, "Installation of Refinery Instruments and Control Systems," Washington, D.C., 1965.

Baker, H.D., Ryder, E.A., and Baker, M.A., *Temperature Measurement in Engineering*, Vol. II, New York: John Wiley & Sons, 1961.

Ball, K., "Thermocouples and RTD's," *InTech*, August 1986.

Bediones, D., et al., "Criterial for the Selection of Thermocouples Versus RTDs in Industrial Applications," Paper #91–0300, Instrumentation, Systems, and Automation Society Conference, Toronto, 1991.

Bluestein, I. "Understanding Contact Temperature Sensors," *Sensors*, October 2001.

Carlson, D.R., "Transmitting a Remote Temperature," *Control*, April 1989.

Corruccini, R.J., "Interpolation of Platinum Resistance Thermometers, 10° to 273.15°K," in Temperature: Its Measurement and Control in Science and Industry, Vol. 3, Pt. I, New York: Van Nostrand Reinhold, 1962.

Evans, J.P. et al. *A Study of Stability of High Temperature Platinum Resistance Thermometers*, New York: Van Nostrand Reinhold, 1962.

© 2003 by Béla Lipták

Fraden, J., *Handbook of Modern Sensors*, 2nd ed., Heidelberg: Springer-Verlag, 1997.

German Standards Committee (DNA) Standard DIN 43760, "Fundamental Values of Measuring Resistors for Resistance Thermometers," Berlin, 1980.

Hage, J., "Smart Temperature Transmitter Accents Accuracy," *Control*, September 1999.

Hashemian, H.M. and Petersen, K.M., "Smart Thermocouple and RTD Systems for Industrial Applications," Instrumentation, Systems, and Automation Society Conference, Houston, October 1992.

Hormuth, G.A., "Ways to Measure Temperature," *Control Engineering*, Reprint No. 948, 1971.

Instrumentation and Control Systems Engineering Handbook, Blue Ridge Summit, PA: TAB Books, 1978.

International Practical Temperature Scale of 1968, Amended Edition of 1975, *Metrologia*, 12, July 17, 1976.

Johnson, R., "Measuring the Hot, Difficult and Inaccessible," *Control Engineering*, June 2001.

Kerin, T.W., "Temperature Measurement in the 1990s," *InTech*, August 1990.

Leewis, W., "The International Temperature Scale of 1990," Paper #91–0302, Instrumentation, Systems, and Automation Society Conference, Toronto, 1991.

Magison, E., "Temperature Measurement," *InTech*, October 25, 2001.

Meyers, C.H., "Coiled Filament Resistance Thermometers," *NBS Journal of Research*, Vol. 9, 1932.

Michalski, L. et al., *Temperature Measurement*, 2nd ed., London: John Wiley & Sons, 2001.

Petersen, W., "Choosing the Right Temperature Transmitter," *In Tech*, April 1991.

Prentice, G.R., "Seven Reasons Why Temperature Transmitters are Better Than Direct Wiring," *Process Heating*, June 1999.

"Resistance Thermometers: Thermistors," *Measurements and Control*, April 1991.

Schooley, J.F., "State of the Art of Instrumentation of High Temperature Thermometry," Argonne National Laboratories' Symposium, Publication No. ANL-73–7, Argonne, IL, 1977.

Stockham, R., "Temperature Transmitters Take the Lead Over Direct Wiring," *Control and Instrumentation*, Product Survey Directory, 1999.

Tavener, J.P., "Platinum Resistance Temperature Detectors," *Measurements and Control*, April 1974.

Trietley, H.L., "Avoiding Error Sources in Platinum Resistance Temperature Measurement," *InTech*, February 1982.

Volbrecht, A. and Gordon, W., "Temperature Measurement: Making Sense of it All," *Sensors*, June 1998.

Waterbury, R.C., "RTDs vs. Thermocouples," *InTech*, March 1994.

© 2003 by Béla Lipták

4.11 Temperature Switches and Thermostats

B. G. LIPTÁK (1982, 1995) **L. W. MOORE, B. ADLER** (2003)

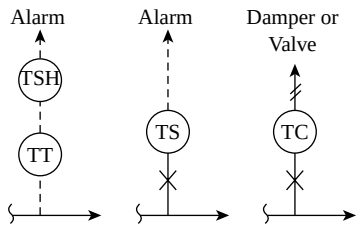

Flow Sheet Symbol

Types:

A. Electronic Switches
  A1. Input From Transmitter
  A2. Input From Sensor in the Field
B. Electromechanical Switches
C. Thermostats
  C1. Electrical/Electronic
  C2. Pneumatic

Range:

A1: Depends on sensor/transmitter range
A2: Depends on sensor, from –328 to 4172°F (–200 to 2300°C)
B: From 0 to 75°F (–8 to 24°C) up to 50 to 650°F (10 to 343°C) spans are standard; the maximum range is from –50 to 1100°F (–46 to 593°C)
C: Room thermostat set points are adjustable from 45 to 85°F (7 to 29°C) for heating and from 55 to 105°F (13 to 40°C) for cooling services

Cost:

A: $150 to $600
B: Bimetallic spring elements cost only a few dollars; general purpose temperature switches are $150; industrial-quality, indicating, explosion-proof temperature switches with thermowells cost $300 to $500
C: Conventional room thermostats cost from $50 to about $100; programmable microprocessor-based energy-saver thermostats cost $200 to $400

Inaccuracy:

B: 0.5 to 2% of span
C: Traditional thermostats are usually uncalibrated and their set point error can vary from 0.5 to 3% and is not guaranteed. The microprocessor-based programmable thermostats are repeatable within 1°F (0.6°C).

Repeatability of Actuation:

A: 0.5% of span for analog, 0.05% for digital

Partial List of Suppliers:

Acromag (A1, A2) (www.acromag.com)
Allen-Bradley (B) (www.ab.com)
Ametek Drexelbrook (B) (www.drexelbrook.com)
API (A1, A2) (www.api-usa.com)
Applications Engineering Ltd. (B) (www.appeng.co.uk)
ASCO (B) (www.ascovalve.com)
Ashcroft (B) (www.dresserinstruments.com)
Barksdale/Crane (B) (www.barksdale.com)
Custom Control Sensors (B) (www.ccsduslsnap.com)
Dallas Semiconductor/Maxim (B) (www.para.maxim-ic.com)
Dresser Instruments (B) (www.dresserinstruments.com)
Eurotherm/Action Instruments/Invensys (A1, A2) (www.actionio.com)
Eurotherm/Barber Coleman (A1, A2, C) (www.eurotherm.com)
Fluid Components (B) (www.fluidcomponents.com)
Foxboro Co. (A1) (www.foxboro.com)
Hi-Stat Div. Stoneridge (B) (www.histat.com/histat/temp-sw.htm)
Honeywell (B) (www.thermalswitch.com)
Honeywell (C) (www.content.honeywell.com/yourhome/ptc-thermostats/thermostat.ht)

© 2003 by Béla Lipták

Honeywell Sensing and Control (A1, A2) (www.honeywell.com/sensing)
Jumo (B) (www.jumoprocesscontrol.com)
Kobold (B) (www.coboldusa.com)
Mercoid/Dwyer (B) (www.dwyer-inst.com)
Moore Industries-International, Inc. (A1, A2) (www.miinet.com)
Neo-Dyn (B) (www.neodyn.com)
Omega Engineering (A1, A2, B) (www.omega.com)
Powers Controls (B, C) (www.powerscontrols.com)
Robertshaw/Invensys (C) (www.robertshaw.com/cli-fam-robTherm.html)
Rochester/Ametek (A1, A2) (www.rochester.com)
Rosemount Inc. Div. of Emerson (A1) (www.rosemount.com)
SOR (B) (www.sorinc.com/productsTemp.stm)
Staefa/Siemens Building Automation (C) (www.sbt.siemens.com/hvp/Components/catalog/thermostats.asp)
Therm-O-Disc/Emerson (B) (www.thermodisc.com)
Thermo Electric (B) (www.thermo-electric-direct.com)
United Electric (B) (www.ueonline.com)
White Rogers (C) (www.whiterogers.com)

INTRODUCTION

The terms *thermostat* and *temperature switch* are somewhat interchangeable. Temperature switches are on-off devices, while thermostats are narrow (frequently fixed) proportional band controllers. Their common characteristic is that measurement, set point, and control functions are all combined into a single instrument.

A thermostat is a device that controls the temperature in an enclosed space and can be electrical/electronic or pneumatic. It functions either as a proportional-only controller or as an on-off switch with a dead-band.

Figure 4.11a illustrates some of the terminology used in connection with temperature switches. The temperature range within which the actuation point can be set is referred to as *adjustable range.* The switch may actuate at its set point on rising (*high*) or falling (*low*) temperature. The set point is the temperature that actuates the switch to open or close an electric circuit. The set point accuracy defines the band within which repetitive actuations will occur. Differential or dead band is the difference between the set point and reactuation point. For example, if a high temperature switch is set to actuate (close) at 100°F (38°C) on rising temperature, it will close at that point. When the temperature drops, it will not open again until the temperature has fallen to 95°F (35°C). In this case, the differential is 5°F (2.8°C). Tolerance is the repeatable accuracy of the reactuation point.

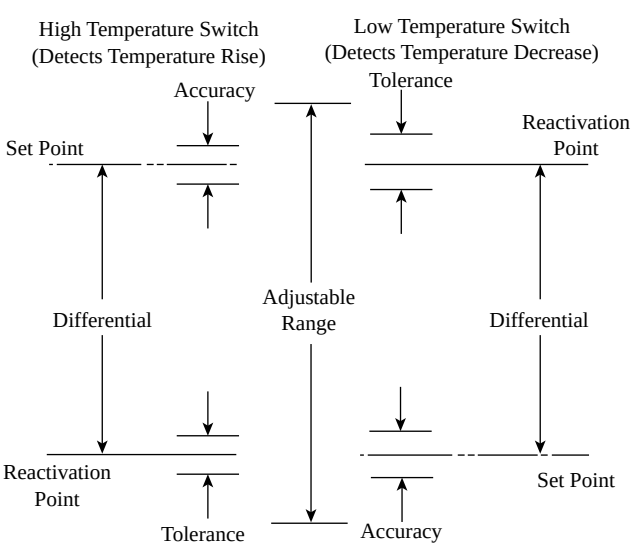

FIG. 4.11a
Temperature switch terminology.

Temperature switches utilize a wide variety of technologies depending on their applications in commercial products, industrial equipment, process control, and even aerospace. They also vary in sophistication from simple snap disc models typically used in coffee makers up through very sophisticated models. An alternate name for them is limit alarms. They can accept temperature sensor inputs from thermocouples (TCs) or resistance temperature detectors (RTDs) and provide multiple alarms at different settings or serve both alarm and equipment shutdown functions. This section will discuss both industrial and commercial switches as well as personal comfort (heating, ventilation, and air conditioning [HVAC]) thermostats.

ELECTRONIC TEMPERATURE SWITCHES

There are two types of electronic temperature switches (some suppliers also call them limit alarms), which are differentiated by the source of their input signals. If the temperature of interest is detected by a temperature transmitter, the high or low temperature switch detects a transmitter output signal of 4–20 mA or 1–5 V DC. If a transmitter is not available, a local process temperature sensor is connected directly to the electronic high or low temperature switch (limit alarm), which is preferably mounted near the sensing point. Both types will be discussed.

© 2003 by Béla Lipták

Input from Transmitter

Temperature transmitters with 4–20 mA output signals are often connected to a programmable logic controller or distributed control system for monitoring, alarming, and control. However, there are often requirements to have a backup device for monitoring the same signal for redundant alarming and emergency equipment shutdown. It makes economical sense to locate this device near the equipment being monitored so that shutdown commands need not be wired all the way from the control room.

This type of temperature switch uses an analog circuitry and typically has either one or two trip points that are screwdriver adjusted and provide relay outputs. These analog switches require a signal source and a continuity-measuring device to set the trip points. Such an analog temperature switch is shown in Figure 4.11b. Indicating models are also available, which indicate both the detected temperature and the set point for switch actuation. Trip point repeatability as a percent of input span varies from 0.5 to 0.05% of span, as a function of whether the device is an inexpensive analog model or a more accurate digital one. Some models are also provided with an adjustable dead band, which is a range, through which the input can change without causing a state change in the switch position.

High-end digital temperature switches are field-configurable for trip point, dead band, time delay, and latching options (Figure 4.11c). Others also incorporate an indicating display, which is scalable in various engineering units, or provide excitation power for the temperature transmitter and retransmits the received input signal as an isolated 4–20 mA output signal. These temperature switches are available with 1 to 4 relays.



FIG. 4.11b
Analog electronic switch operating off the output signal of a transmitter. (Courtesy of Moore Industries-International, Inc.)



FIG. 4.11c
Configurable and indicating digital electronic switch operating off the output signal of a transmitter. (Courtesy of Moore Industries-International, Inc.)

Input Directly from Sensor

These direct connected temperature switches also range from less sophisticated analog designs to the more sophisticated field-configurable digital models. For the analog switches, the type of sensor input must be specified while the digital models can be field-configured for a variety of sensors. This includes eight types of TCs and a number of RTDs, including two-, three-, or four-wire circuitry and platinum, nickel, or copper elements.

These switches also accept direct resistance input or millivolt signals. A valuable feature of these sensor input devices is their ability to perform sensor diagnostics. One model provides a relay output in the event of a sensor failure while inhibiting the other alarm/shutdown outputs. The benefit is that a nuisance shutdown of a piece of machinery or a process may be avoided and yet the user knows that a sensor must be replaced to maintain monitoring.

If the same temperature, which is detected by the temperature switch, is also needed for control, recording or other reasons, some of these direct-connected devices are able to also act as transmitters and output a 4–20 mA signal (Figure 4.11d). This way, in addition to the temperature switch, the functions of indication and transmission are also provided by the same unit.

Installation Considerations

In The Control Room If a temperature transmitter output is already being sent to the control room, it is logical to also mount the temperature switch there. For direct sensor input, better performance is obtained by installing the instrument close to the sensor, in order to reduce the effects of electrical

© 2003 by Béla Lipták



FIG. 4.11d
Direct connected configurable electronic temperature switch with display and retransmission capability. (Courtesy of Moore Industries-International, Inc.)

noise (electromagnetic interference and radio frequency interference [RFI]) and the errors introduced by extension cables.

For the installation of high temperature switches, the recommended practice is to connect them in parallel with the rest of the control system, recorder, or logger. Most input circuits to these devices use a 250-Ω input resistor that converts the 4–20 mA signal into a 1–5 V DC signal. By connecting the alarm trip in parallel, it can then monitor this same 1–5 V DC signal and either device can be removed from service without affecting the operation of the other.

While most models can be surface mounted, the (DIN) rail mounting style is the most effective, because the electronic switch units simply clip on a standard DIN rail eliminating the need for drilling and tapping screw holes.

Field Mounting Local mounting is recommended for all direct connected temperature switches in order to minimize the signal degradation caused by the long wiring runs back to a control room. When a high temperature switch also initiates equipment shutdown, wiring costs can be reduced by installing the alarm/shutdown switch near the protected equipment.

When installing any electrical or electronic equipment in the field, the instrument enclosures must meet both environmental and safety concerns. If explosive vapors or dust are present continuously in the area, the enclosure must be a Class 1, Division 1 explosion proof enclosure, which would be needed to meet Class 1, Division 1 requirements of agencies like (FM) and (CSA).

If these vapors or dusts are only present under abnormal conditions, the enclosures must meet the much less rigorous requirements of Class 1, Division 2. Note that both the instrument and the enclosure enter into the consideration. Often a Division 2 enclosure can also meet (NEMA) 4X requirements for watertight and corrosion resistance. Division 2 also mandates that there be no open contacts, and alarm devices must have hermetically sealed relays or use solid-state switching to meet this requirement.

Because temperature switches are often installed to protect critical processes, a false or nuisance trip can be very costly. Frequently the cause of these nuisance trips is RFI generated by walkie-talkies, which are used in most plant locations. Therefore, it is important to specify that the switch must include RFI immunity. (Immunity to 10 V/m according to the SAMA specification 33.1 is considered acceptable.)

Availability and Reliability

Often, a temperature switch will have the critical role of guaranteeing a safe shutdown. Safety Instrumented Systems standards (including ANSI/ISA 84.01, IEC 61508, and IEC 61511) provide guidance and thereby assure the availability and reliability of the devices that are used in safety related applications.

Availability means that the device will be able to perform the assigned task when it is called upon to do so. For example, the probability that an alarm switch or limit device will sense a dangerously high temperature and will trip an emergency shutdown valve when the tripping occurs is referred to as its Probability of Failure On Demand.

Reliability refers to the likelihood of the device suffering a nuisance failure and thereby causing a false trip. This factor is referred to as its Mean Time To Fail spurious. These standards contain equations for the calculation of the reliability of the complete loop. These calculations are performed by inserting numerical values for the availability and reliability of each device in a loop. Only a few suppliers can provide the data required to calculate the reliability of such loops. When a third party tests and evaluates an instrument, it publishes a report known as a Failure Modes Effects, Diagnostic Analysis. That report contains all the required data for the calculations in the standards. Documented reliability does not have to increase costs, because higher reliability often results in reduced maintenance costs.

ELECTROMECHANICAL TEMPERATURE SWITCHES

Temperature switches are used to energize and deenergize electric circuits as a function of the relationship between the process, temperature, and a predetermined set point. The set point error on the best electro-mechanical switches is about ±0.5% of span, but that error can rise substantially as the switch cost and quality drops. The sensing elements are mostly the elastic types including filled and bimetallic elements. The electric switching assemblies are either snap-acting mechanical micro-switches or mercury switches. The latter contain no mechanical moving parts and must be mounted on a vibration-free level surface.

Many applications from furnace protection to local fan controls may not require sophisticated electronic temperature

© 2003 by Béla Lipták

switches, and in such applications bimetallic or filled bulb type switches are used. The lower cost versions are provided only with factory set fixed set points and fixed differentials, while the more expensive ones can be indicating and have adjustable differentials and calibrated, externally adjustable set points and setting scales.

Features Required for Industrial Applications

Temperature switch elements should be selected with service life and maximum operating temperature in mind. Most elastic elements will have a service life of close to a million cycles if the cycle time is not less than 5 s. The service life is related to the amount of current required to switch and the frequency of switching. By increasing the dead-band, the frequency of switching is reduced and the life of the switch increases. Similarly, increasing the margin between the switch rating and the actual current flow handled will also increase switch life. For example, a device that is switching 4 A should have a 10-A and not a 5-A rating.

Selection of the adjustable range for a specific installation should consider both the set point actuation accuracy and the life factor. For greatest accuracy, the set point should fall in the upper half of the range, but for longest service life it should be in the lower half. The usually acceptable compromise is to locate the set point in the middle third of the range.

It is desirable to have an external calibrated knob provided on the temperature switch for set point adjustment. Uncalibrated or internal set point adjustments are generally undesirable on industrial installations. The fixed differential temperature switches are furnished with a single adjustment for set point. These units are factory-set with differentials that range from 0.5 to 1% of span. On double-adjustment-type designs, both set points and reactuation points can be independently adjusted. The maximum differential in such designs is the range of the switch, while the minimum varies between 2 and 8% of span. Temperature switches with dual control are also available. Here, two independent switches mounted in the same housing are responding to the same process temperature in opening or closing two independent circuits.

Safety Considerations

The electrical rating of temperature switches at a 115 V operating level varies from 0.3 to 10 A on AC or DC circuits. Generally, the dual control and the fixed differential switches have lower ratings, and the double-adjustment-type units have higher ratings. The available circuit arrangements are very flexible. Some of the standard arrangements include single-pole–single-throw, single-pole–double-throw, and double-pole–double-throw designs, but units are available with up to four poles.

There are basically three standard case designs: general purpose (NEMA 1), weather-resistant (NEMA 2 and 3), and explosion-proof (NEMA 7) cases. These enclosures and the switches inside them may require certification to meet hazardous area classifications from certification agencies such as FM, CSA, or Underwriters' Laboratories.

In some designs, the control mechanism is an integral part of the explosion-proof case, while in others it can be removed in the field for maintenance. As noted earlier, the set point should be externally adjustable so that the explosion-proof case does not need to be opened in order to change the set point. For added convenience of the operator, some switches also provide continuous process temperature indication. Another optional feature is push-button reset, which must be manually operated before the circuit will be restored to its original state after an automatic operation. This manual reset encourages the operator to verify the safety of the system before restarting.

THERMOSTATS

Conventional thermostats are usually uncalibrated devices and their manufacturers usually do not guarantee their accuracy. This is a limitation, because it is possible to have some thermostats with as much as 5 to 10°F (3 to 6°C) error in their measurement. In the last decades a new generation of thermostats has been introduced that guarantee to limit their error to 1°F (0.6°C) or less.

Electromechanical Designs

There is little difference between a two-position thermostat and a temperature switch. The temperature-sensing elements in the thermostats shown in Figure 4.11e are bimetallic springs. In the design shown on the left, the gap between contacts is almost zero and the movement of the bimetallic element directly opens and closes the load contact. In the design shown in the center a positive gap is provided, serving to reduce wear on control equipment. The gap is produced by toggle action and is adjustable by adjusting the spring tension.

In slow processes with long cycle periods, such as in domestic thermostats, anticipation is provided through the use of a negative gap (right of Figure 4.11e). In this thermostat, when the heater in a room is turned on, a small internal heater within the thermostat is also actuated. This causes the bimetallic spring to turn off the room heater before the room temperature reaches the temperature inside the thermostat.

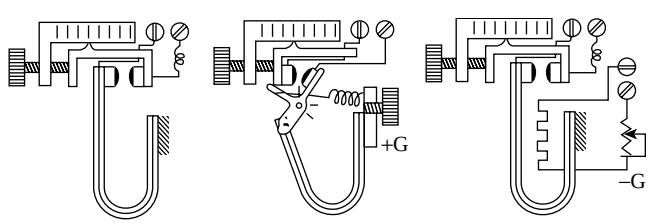

FIG. 4.11e
Design variations of two-position electromechanical thermostats.

© 2003 by Béla Lipták

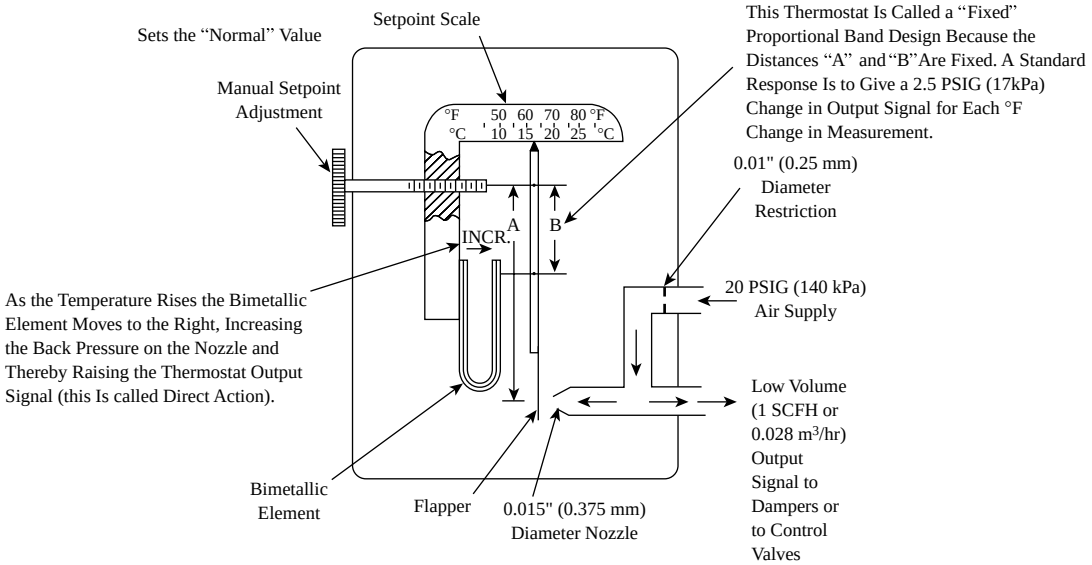

FIG. 4.11f

Direct-acting pneumatic-bimetallic thermostat with manual set point and fixed proportional band. This is a low-volume design since output air flow is limited because there are no relays.

Pneumatic Designs

Pneumatic-Bimetallic The next level of sophistication is to replace the completely on-off action (with or without adjustable gap) of the thermostat with a small amount of throttling. In such throttling thermostats, the room temperature has to move away from set point by a degree or two before the heating (or cooling) valve (damper) is fully opened. One simple way of achieving such throttling action is by letting the bimetallic spring move a flapper in front of a nozzle (Figure 4.11f), thereby causing the pneumatic output pressure of the thermostat to change with temperature.

Throttling Thermostats are distinguished from other controllers in that they provide proportional action only and that their proportional band (gain) is *narrow and fixed.* A conventional room thermostat might have a set point range of 55 to 85°F (13 to 29°C) and a *fixed sensitivity* (gain) of 2.5 PSI/°F (0.3 bar/°C). Assuming that this thermostat operates a control valve having a 9 to 13 PSIG (0.6 to 0.9 bar) spring range, we can convert the fixed sensitivity of 2.5 PSI/°F into a percent proportional band value that is better understood by instrument engineers.

Sensitivity (or gain) is stated as the ratio between a change in measurement and a change in the corresponding controller output. A 1°F (0.56°C) change in measurement is 3.3% of the measurement range of 30°F (55 to 85°F, or 13 to 29°C), while the 2.5 PSI change in controller output is 62% of the controller output range of 4 PSI (9 to 13 PSIG). If a 3.3% change in input results in a 62% change in output, that is a gain of 62/3.3 = 19. Converting this typical thermostat gain to proportional band, we get:

$$P = \frac{100}{G} = \frac{100}{19} = 5.3\% \qquad \textbf{4.11(1)}$$

This controller, having a fixed proportional band of 5% is very sensitive, has a small "offset," and, as its gain is fixed, cannot be tuned.

Offset Error Let us examine the consequences of these characteristics separately. A sensitive controller is suited for the control of very slow, large-capacity processors. Temperature control in the HVAC industry usually fits that description. Therefore, thermostats with fixed, high gains can give acceptable results, if space temperature can change only very slowly. On the other hand, such thermostats cannot control spaces with fast dynamics (short time constants) and will cycle or lose control when applied to such service.

The offset inherent in all proportional controllers is not a serious drawback because the resulting error is small, due to the narrowness of the proportional band. Using our earlier example and assuming that the thermostat output is set at 11 PSIG (0.76 bar) when the error is zero (thermostat on set point), we can calculate the maximum error due to offset. When there is no error, the control valve is 50% open (output is 11 PSIG, or 0.76 bar). As the load changes, an error must be allowed to develop in order for the valve opening to change. Assuming that the valve has been correctly sized and is large enough to handle all expected loads, the maximum error due to offset will be that deviation from set point that is required to move the valve from half to full opening. This 2 PSIG (0.14 bar) change in thermostat output will occur when the deviation from set point is 0.8°F (0.4°C).

Therefore, this is the size of the permanent offset error for a gain of 19:1. There is an inverse linear relationship between gain and offset error, such that if the gain is cut in half, the offset error will be doubled.

© 2003 by Béla Lipták

From the above discussion it might be concluded that the conventional room thermostat is a good selection for the HVAC-type applications and that more expensive instruments, such as PID controllers, would not necessarily improve the overall performance.

Design Features Application engineers can choose from a fairly large variety of design features when specifying thermostats, because they cannot only be electromechanical, pneumatic, or electronic, but can also be (1) indicating or blind, (2) direct or reverse acting, (3) can automatically switch their actions in response to a pneumatic or electronic signal, (4) can have bimetallic, filled, or electronic sensing elements, (5) can have local or remote set points, or (6) have their set points under key, concealed, or externally adjustable.

Advanced Features If the set point of a pneumatic thermostat is adjusted remotely by an air signal, each 1 PSIG (0.07 bar) change in set point pressure will move the set point by an adjustable preset amount. The range of this adjustment is usually from 0.15 to 1.4°F (0.1 to 0.8°C) per 1 PSI (0.07 bar). If the set point is to change as a function of the time of day, a timer can automatically operate a solenoid and thereby switch the set point signal.

Some of the more recently developed and more advanced thermostat features include the following:

Adjustable Gains or Proportional Bands Another term used to describe the sensitivity of thermostats is throttling range. As shown in Figure 4.11g, it refers to the amount of temperature change that is required to change the thermostat output from 3 to 13 PSIG (0.2 to 0.9 bar). The throttling range is usually adjustable from 2 to 10°F (1 to 5°C).

Dual Set Points These thermostats will switch their settings in response to a change in the air supply pressure. Both set points can be manually adjusted, with the day setting made by external thumbwheel and the night setting concealed internally.

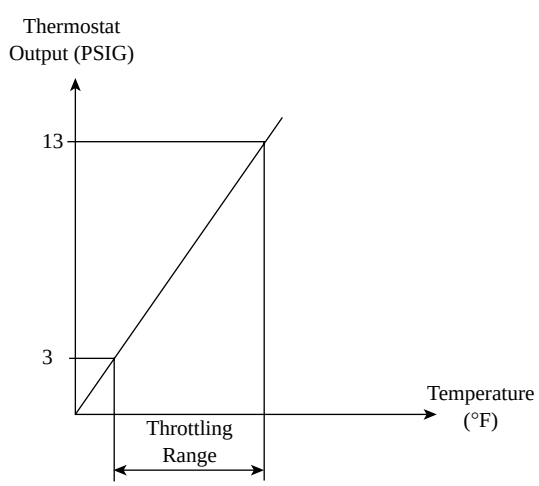

FIG. 4.11g
Definitions of throttling range for pneumatic thermostats.

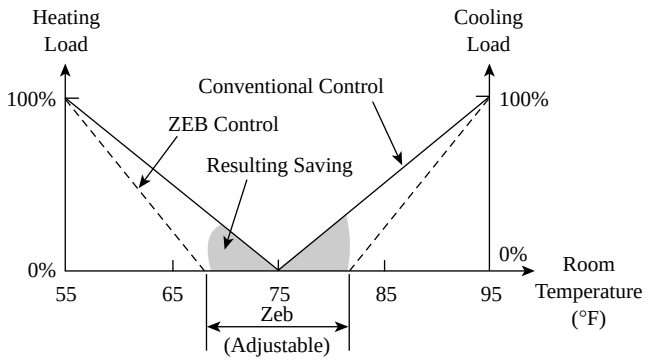

FIG. 4.11h
Zero energy band control.

Limited Control Range These thermostats allow the occupant of an office to move the set point to any value desired, but will disregard any setting that exceeds the limit value. For example, in heating applications, the limit could be 74°F (23°C). In this case, the space temperature will be limited to a maximum of 74°F, regardless of the setting by the occupant. Similar limit values can be set for cooling.

Zero Energy Band Control A recent addition to the available thermostat choices is the zero energy band (ZEB) design. The idea behind ZEB control is to conserve energy by not using any when the room is comfortable. As illustrated by Figure 4.11h, the conventional thermostat wastes energy by continuing to use energy when the area's temperature is already comfortable. The comfort gap, or ZEB, is adjustable and can be varied to match the nature of the particular space involved.

ZEB control can be accomplished in one of two ways. The single set point and single output approach is illustrated on the left side of Figure 4.11i. Here the cooling valve fails closed and is shown to have an 8 to 11 PSIG (0.55 to 0.76 bar) spring range, while the heating valve is selected to fail open and has a 2 to 5 PSIG (0.14 to 0.34 bar) range. Therefore, between 5 and 8 PSIG (0.34 and 0.55) both valves are closed, and no pay energy is expended while the thermostat output is within this range. The throttling range is usually adjustable from 5 to 25°F (3 to 13°C). Thus, if the ZEB is 30% of the throttling range, it can be varied from a gap size of 1.5°F (0.85°C) to 7.5°F (4.2°C) by changing the throttling range (or gain).

Split Range Control While the split-range approach is a little less expensive than the dual set point scheme (shown on the right of Figure 4.11i), it is also less flexible and more restrictive. The two basic limitations of the split-range approach are:

1. The gap width can only be adjusted by changing the thermostat gain; maximum gap width is limited by the minimum gain setting of the unit.
2. In this design, the heating valve must fail open; this is undesirable from an energy conservation point of view.

© 2003 by Béla Lipták

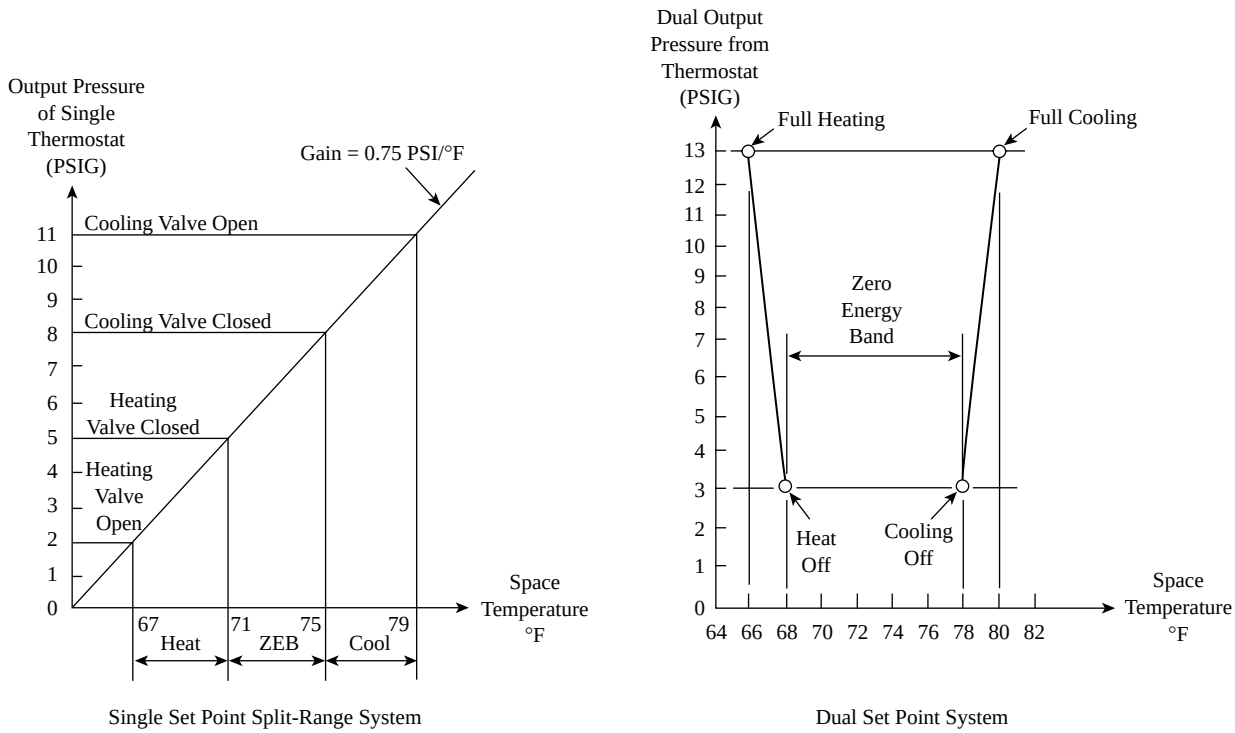

FIG. 4.11i
Implementation of zero energy band control.

These limitations are removed when a dual set point, dual output thermostat is used. Here both valves can fail closed and the band width is independently adjustable from the thermostat gain. The gains of the heating and cooling thermostats are also independently adjustable. In Figure 4.11i, the heating thermostat is reverse-acting and the cooling thermostat is direct-acting.

Electrical/Electronic Designs

The most common is the low voltage unit that uses external interposing relays to control heating and/or cooling equipment (typically 24 V AC)
Line voltage units that directly control AC circuits (120 or 240 V AC)
Heating only or heating/cooling models
Digital or analog indication of room temperature
Bimetallic, filled system or electronic sensing elements
Direct or reverse acting
Local or remote set point
Local set points may be external or internal and may be key protected
Limited control range thermostats allow the occupant of an office to move the set point to any value desired, but will disregard any setting that exceeds the limit value. For example, in heating applications, the limit could be 74°F (23°C). In this case, the space temperature will be limited to a maximum of 74°F, regardless of the setting by the occupant. Similar limit values can be set for cooling.
Programmable setback models with 24-hour or 7-day programs

RECENT ADVANCES

Microprocessor-based units continue to incorporate new features. These are programmable devices with memory and communication capability. They can be monitored and reset by central computers using pairs of telephone wires as the communication link. Microprocessor-based units can be provided with continuously recharged backup batteries and with accurate electronic room temperature sensors. They can also operate without a host computer (in the stand alone mode). In this case the user manually programs the thermostat to maintain various room temperatures as a function of the time of day and other considerations.

In 2000, the first residential gateway for the HVAC industry's new open communications standard for residential environmental control was introduced. This gateway enables secure, remote access to residential HVAC systems via touch-tone telephone, standard phone line, and pass code. Some systems offer either dial in or dial out functions. Owners can call in to check the temperature, change the status of their HVAC system, and perform other thermostat-related functions. These telephone access modules enable monitoring of the building's temperature and its heating/cooling equipment. It can report when a furnace filter needs replacing or an electronic air cleaner's cells need cleaning. And it can call up to three phone numbers to immediately alert the owner,

© 2003 by Béla Lipták

contractor, or others of problems, such as freezing temperatures or an extended power outage.

Bibliography

Air-Conditioning and Refrigeration Institute Standard: 750–76, "Thermostatic Refrigerant Expansion Valves," Atlanta, GA, 1976.

American Gas Association Standard: Z21.23–1975, "Gas Appliance Thermostats," Washington, D.C., 1975.

American Society of Heating, Refrigerating and Air-Conditioning Engineers Standard: 17–75 (ANSI: B60.1–1975), "Method of Testing for Capacity Rating of Thermostatic Refrigerant Expansion Valves," Atlanta, GA, 1975.

American Society of Testing and Materials Standard: B106–68, "Standard Method of Test for Flexibility of Thermostat Metals," West Conshohocken, PA, 1972.

American Society of Testing and Materials Standard: B389–65, "Standard Method of Test of Thermal Deflection Rate of Spiral and Helical Coils of Thermostat Metal," West Conshohocken, PA, 1975.

"Automatic Control," in *ASHRAE Handbook and Product Directory*, Atlanta, GA: American Society of Heating, Refrigerating and Air-Conditioning Engineers,1980, chap. 34.

Eckman, D.P., *Automatic Process Controls*, New York: John Wiley & Sons, 1958.

"Filled-Systems Thermometers," *Measurements and Controls*, September 1991.

Hashemian, H.M., et al., "Assuring Accurate Temperature Measurement," *InTech*, October 1989.

Jutila, J.M., "Temperature Instrumentation," *Instrumentation Technology*, February 1980.

Krigman, A., "Guide to Selecting Temperature Switches," *InTech*, June 1984.

Lipták, B.G., "Reducing the Operating Costs of Buildings by the Use of Computers," *ASHRAE Transactions*, Vol. 83, Part I, 1977.

National Electric Manufacturers' Association Standard: DC3–1972, "Residential Controls: Low Voltage Room Thermostats," Rosslyn, VA, 1972.

National Electric Manufacturers' Association Standard: DC13–1973, "Residential Controls: Integrally Mounted Thermostats for Electric Heaters," Rosslyn, VA, 1973.

Plumb, H.H., "Temperature: Its Measure and Control in Science and Industry," 5th Symposium on Temperature, National Bureau of Standards, American Institute of Physics, Instrumentation, Systems, and Automation Society, 1971.

Spethmann, D.H., "Importance of Control in Energy Conservation," *ASHRAE Journal*, February 1975.

Roots, W.K., *Fundamentals of Temperature Control*, New York: Academic Press, 1969.

Underwriters' Laboratories Standard: UL-521 (ANSI: Z220.1–1971), "Standard for Fire-Detection Thermostats," Northbrook, IL, 1971.

Ween, S., "Liquid-in-glass Thermometers, Still Well and Indicating," Paper #91–0308, Instrumentation, Systems, and Automation Society Conference, Toronto, 1991.

© 2003 by Béla Lipták

4.12 Thermistors

T. G. CLAGGETT, R. W. WORRALL (1969, 1982) **B. G. LIPTÁK** (1995)
P. M. B. SILVA GIRÃO (2003)

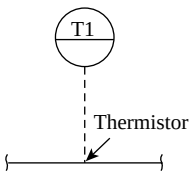

Flow Sheet Symbol

Range:	Typically, from –58 to 302°F (–50 to 150°C). Bead thermistor probes, hermetically sealed into shock resistant solid glass rods, are available from –321 to 572°F (–196 to 300°C) and from –40 to 1652°F (–40 to 900°C).
Span:	Can be as narrow as 2°F (1°C), which can result in extremely high sensitivity
Differential Temperature Same Measurement:	By connecting two thermistors to different halves of the Wheatstone bridge, thousandths of a degree difference can be measured.
Resistance:	From 0.5 to 20,000,000 Ω (usually referenced at 77°F [25°C]). Standard units are about 5,000 Ω. If the resistance of a thermistor element is 5,000 Ω at room temperature, it will drop to about 20 Ω at 572°F (300°C) and will rise to 200,000 Ω if the temperature drops to –58°F (–50°C).
Linearity:	Nonlinear
Sensitivity:	Typically 25 to 250 Ω/°F (50 to 500 Ω/°C), which translates into 0.5 to 5% of sensor resistance change per degree Fahrenheit temperature (1 to 10%/°C). Most industrial units have a sensitivity of about 2%/°F (4%/°C).
Inaccuracy:	Generally between 0.1 and 1°F (0.006 and 0.6°C). Because spans can be extremely narrow, the error with this sensor (if calibrated) can be as low as 0.005°F (0.003°C), but because of long-term stability and self-heating effects, long-range accuracy is much lower.
Thermal Time Constant:	Typically around 10 s in still air and 1 s in oil
Thermal Dissipation Constant:	Typically around 1 mW/°F (2 mW/°C) in still air and 5 mW/°F (10 mW/°C) in oil
Interchangeability:	±0.1°F (±0.05°C) for spans of up to 122°F (50°C); ±1°F (±0.5°C) for spans of up to 392°F (200°C)
Cost:	$10 to $100. The unpackaged elements can be obtained for $10 or less; when packaged for process industry services, their costs are similar to those of resistance temperature detector-based sensors, handheld monitors or transmitters.
Partial List of Suppliers:	Ametherm, Inc. (www.ametherm.com) BetaTHERM Corp. (www.betatherm.com) Cera-Mite Corp. (ceramite.com) Fenwal Electronics (www.fenwal.com/therm.htp) Hart Scientific (www.hartscientific.com) JMS Southeast (www.jms-se.com) Kele and Associates (www.kele.com) MMC Electronics America Inc. (www.mmea.com) Murata Manufacturing Co., Ltd. (www.murata.com) Nichicon America Corp. (www.nichicon-us.com) NIC Components Corp. (www.niccomp.com) Omega Engineering, Inc. (www.omega.com)

© 2003 by Béla Lipták

Precision Engineering Ltd. (www.pel-ltd.co.uk/english/homepage.htm)
Precision Measurement Engineering (www.pme.com)
Mitsubishi Int. Corp. (www.mitsubishi.com/index_e.cfm)
Quality Thermistor, Inc. (www.thermistor.com)
Sensor Scientific, Inc. (www.sensorsci.com)
Smith Systems Inc. (www.smith-systems-inc.com)
STOLAB Inc. (www.stolab.com)
Tech Instrument (www.techinstrument.com/probe3.htm)
Therm-O-Disc (www.thermodisc.com/ntcptc.html)
Thermometrics, Inc. (www.thermometrics.com)
Therm-X of California (www.therm-x.com)
Thermalogic Corp. (www.thlogic.com)
U.S. Sensor Corporation (www.ussensor.com)
Wahl Instruments Inc. (www.palmerinstruments.com/wahl)
Western Electronic Components Corp. (www.wecc.com)
Wuntronic GmbH (www.wuntronic.de)
YPco Electronics (www.ypco.com)
YSI-Yellow Springs Instr. Co. (www.ysi.com/index.html)

Like the resistance temperature detector (RTD), the thermistor is a resistive device that changes its resistance predictably with temperature. It is constructed from ceramic semiconductor materials. Its benefit is a very large change in resistance per degree change in temperature, allowing very sensitive measurements over narrow spans. Due to its very large resistance, lead wire errors are not significant.

INTRODUCTION

Thermistors are thermally sensitive resistors and have either a negative (NTC) or positive (PTC) resistance/temperature coefficient.

NTC thermistors, or NTCs for short, are semiconductors made from specific mixtures of pure oxides of nickel, manganese, copper, cobalt, tin, uranium, zinc, iron, magnesium, titanium, and other metals sintered at temperatures above 1800°F (982°C). The type and proportion of oxides used, the sintered atmosphere, and the sintering temperature dictates the resistance and temperature coefficient of the NTC thermistors. Their distinguishing characteristics are a high temperature coefficient and the fact that their resistance is a nonlinear function of absolute temperature. This makes them very good for narrow span measurement, but more difficult to handle for widespan applications.

PTCs are manufactured from silicon (silistors) or barium, lead, and strontium titanates with the addition of yttrium, manganese, tantalum, and silica (switching PTC thermistors). Silistors have lower sensitivity than NTCs, but their resistance-temperature characteristic is more linear. Switching PTCs have extremely high sensitivity in a narrow range of temperature centered at the Curie temperature of the material.

HISTORICAL NOTE

The first recorded work reporting on a NTC thermistor is from Michael Faraday in 1833. For more than 100 years, the sensors were unstable and not reproducible and were seldom used outside the laboratory. The credit for the development of thermistors as we know them today must be given to Bell Laboratories. They started to manufacture them some 60 years ago, naming them from the term *thermally sensitive resistors*. The Bell project resulted in the development of thermistors stable and reproducible enough to make their large-scale use worthwhile in telephone work around 1940.

The industry in general did not accept these sensors until the 1950s. Bad experiences with commercially available thermistors hampered their acceptance. Variances in resistance at a given temperature and in rate of change of temperature made individual calibration a requirement. Overcoming this difficulty, one manufacturer patented a process for interchangeable thermistors, resulting in production of probes interchangeable to 0.05°F (0.03°C). Boosted by aerospace industry requirements, the 1950s and 1960s witnessed the improvement in the materials used mainly in the manufacture of bead and disk thermistors and the development of chip thermistors. Since the 1970s, and particularly during the 1980s, this type of thermistor was increasingly used in low cost temperature probes for medical applications. Since the 1980s, the use of thermistors increased with demands coming mainly from the transport, medical, and food processing industries.

RESISTANCE-TEMPERATURE CHARACTERISTIC

The negative exponential function that best describes the resistance-temperature (R(T)) characteristic of an NTC can be interpolated using different equations. The Steinhart-Hart equation:[1,2]

$$1/T = A + B(\ln R) + C(\ln R)^3 \qquad \textbf{4.12(1)}$$

where T is the absolute temperature in Kelvin and R the thermistor resistance at temperature T, describes R(T) with the accuracy required in many applications. The determination of coefficients A, B, and C requires calibration at three

© 2003 by Béla Lipták

different temperatures and solving a system of three simultaneous equations. The uncertainty associated with the use of the Steinhart-Hart equation is lower than ±0.005°F (±0.003°C) for a 90°F (50°C) temperature span in the 32 to 482°F (0 to 250°C) range. The inclusion of a squared term reduces that uncertainty, but the calibration must be made at four different temperatures to obtain the four coefficients of the correspondent polynomial.

It is possible to demonstrate that in any range for which the relationship between lnR and 1/T is a straight line, R may be expressed as:

$$R = R_0.\exp(\beta(T_0 - T)/TT_0) \qquad \textbf{4.12(2)}$$

where R is the resistance at temperature T, R_0 the resistance at a specified reference temperature T_0, and β (material constant) is the slope of the R(T) characteristic. At temperatures above 32°F (0°C), this relationship leads to uncertainties of 0.02°F (0.01°C) for temperature spans of 18°F (10°C) and of 0.5°F (0.3°C) for temperature spans of 90°F (50°C).

Figure 4.12a illustrates the relative behavior of thermocouples (TCs), RTDs and NTC thermistors. On the right side of the figure the characteristics of a particular thermistor are shown, which illustrates both its sensitivity and its nonlinearity.[3]

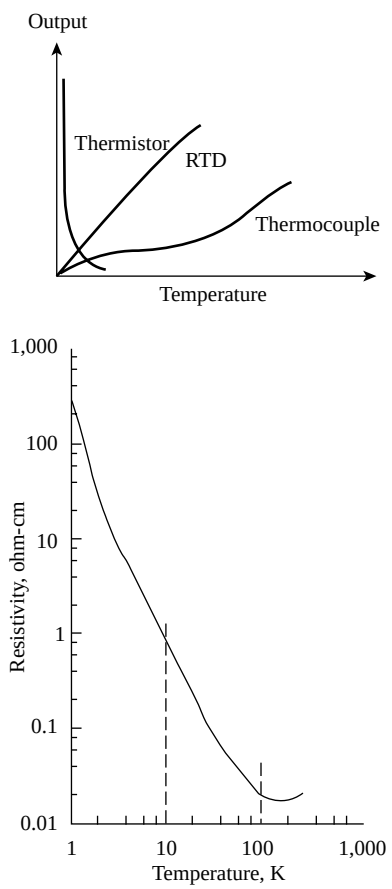

FIG. 4.12a
NTC thermistors are very sensitive and highly nonlinear.[1]

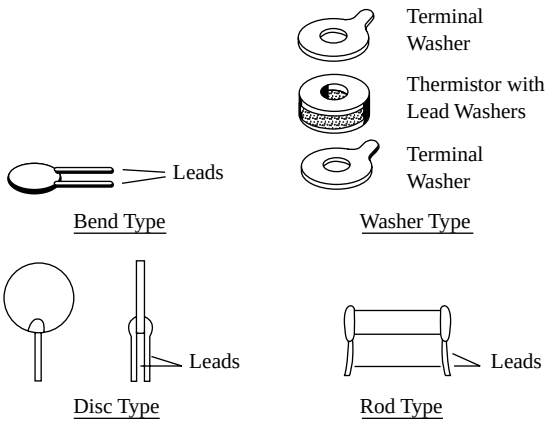

FIG. 4.12b
Variations in thermistor sensor packaging.

SENSOR TYPES

A number of configurations are possible (Figure 4.12b). Most familiar is the bead type, which is usually glass-coated. However, thermistors can be made into washes, discs, or rods. They can also be encapsulated in plastic, cemented, soldered in bolts, encased in glass tubes or needles, or a variety of other forms. These assemblies serve to support the sensor, protect against damage to the wires, direct flow across the unit uniformly, permit sealing of conduits or flow lines, and provide for easier handling (Figure 4.12c).

NTCs can be classified in one of two groups according to the way electrodes are connected to the thermistor body:[4] bead-type thermistors and surface electrode-type thermistors.

Bead-type thermistors have platinum lead wires sintered into the sensor body. This group includes bare and ruggedized beads as well as several glass-encased beads, rods, and probes.

Surface-type thermistors have metallized surface contacts and leads that are radial or axial or nonexisting for surface mounting. They are cheaper to manufacture than bead-type NTCs. Chip and surface mounts are probably the types more used, but disks, rods, and washers are also in demand.

PTCs can be divided in two groups: thermally sensitive silicon resistors (silistors) and switching PTC thermistors.

Silistors are characterized by a fairly constant positive temperature coefficient of about 0.4%/°F (0.8%/°C) in most of its operational range.

TEMPERATURE MEASUREMENT

Microammeter Readout

A simple circuit such as that shown in Figure 4.12d consisting of a battery, a sensor, and a microammeter can be used to measure temperature with a thermistor. In such a circuit, the sensor will have a very high resistance. As long as the voltage is constant, the current flow will be determined only by changes in resistance of the thermistor. The sensor can be

© 2003 by Béla Lipták

LN0255 Immersion Probe For liquid and semi-solids. Stainless steel. For foods, chemical, pharmaceutical and laboratory work. 0.1°C interchangeablility, 6" long stem, .125" diameter for 12" length option, order, **LN0255-12**. 1.0 Second response time*.

LN0255 Immersion Probe With .05°C interchangeability, .250" diameter.

LN0250 Flexible Immersion Probe Vinyl sheath and .135" diameter epoxy tip. Small and flexible. 3.6 Second response time*.

LN0252 Button Surface Probe Solid .375" diameter button can be attached with pressure sensitive adhesive tape or epoxy. Stainless steel contact surface. 1.1 Second response time*.

LN0253 Screw-In Immersion Probe For measurements in pipes, vessels or reactors. 3.6 Second response time*. Stainless steel shank with 1/8" NPT fitting, 6" standard stem length, 12" option, order **LN0253-12**.

*Response time is based on 63% in water moving at 3 feet per second.

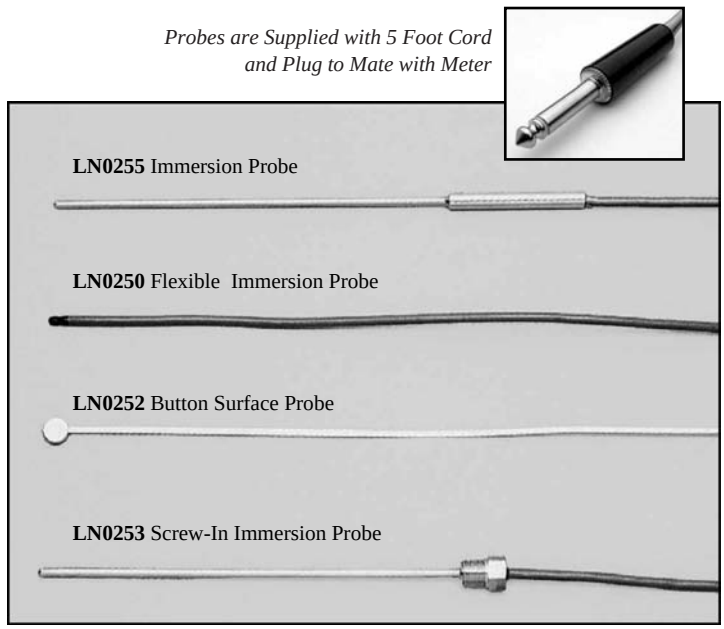

FIG. 4.12c
Some thermistor probe designs. (Courtesy of Wahl Instruments Inc.)

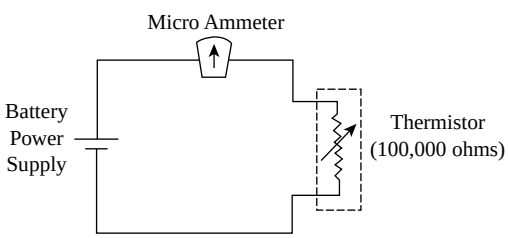

FIG. 4.12d
Microammeter readout.

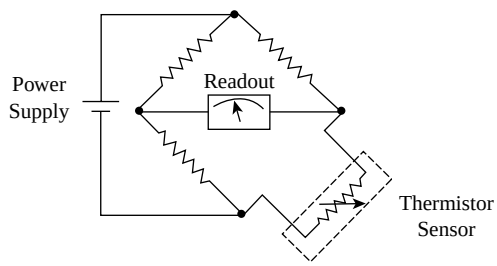

FIG. 4.12e
Wheatstone bridge.

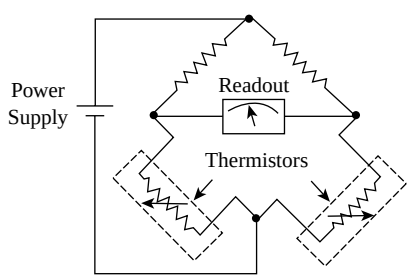

FIG. 4.12f
Differential measurement.

mounted fairly far from the meter and ordinary copper wire can be used for transmission. With a sensor resistance on the order of 10^5 Ω, meter temperature changes and lead wire resistance can be neglected.

Assuming that the thermistor changes its resistance by 2% (2000 Ω) for each degree Fahrenheit of temperature change (4%/°C) and assuming that the total lead wire used was 500 ft of 20-gauge copper wire having a resistance of 10 Ω, the lead wire error would amount to only 0.0045°F (0.0025°C) of temperature error. Even if the thermistor has a total resistance of only 5000 Ω and its 2% temperature coefficient were only 100 Ω/°F, the lead-wire error would still only be 10/100 = 0.1°F. For this reason lead-wire compensation is not a serious problem, and three- or four-wire bridges are not used with thermistors.

Wheatstone Bridge

A DC Wheatstone bridge (Figure 4.12e) is probably the conditioning circuit more widely used with thermistors. Locating the thermistor in one leg of a bridge circuit (Figure 4.12e) with a center zero galvanometer enables very narrow temperature spans to be displayed relatively inexpensively. Range depends upon galvanometer sensitivity and can be as low as 2°F (1°C).

Very accurate temperature measurement can be made with a differential circuit (Figure 4.12f). With two thermistors

© 2003 by Béla Lipták

in different halves in a bridge, the unbalance will be determined by resistance difference caused by temperature difference of the sensors. With a high gain amplifier, differentials of 10^{-3}°C or °F can be measured.

Digital Instrumentation

In recent years, the display of temperature values in numerical format has significantly increased. Low-cost handheld digital thermometers based on an interchangeable thermistor still utilize a Wheatstone bridge to produce a voltage that after amplification (and eventually linearisation) is fed to an analog-to-digital converter. Once in the digital domain, not only can the temperature signal be numerically displayed but it can also be processed using a microprocessor. Interchangeability of thermistors is made possible by storing the R(T) characteristic of the thermistor in a read only memory. This type of solution leads to an accuracy around ±0.2°F (±0.1°C) for temperature spans of some 212°F (100°C).

When higher accuracy is required, calibration of the thermistor at selected temperatures included in the operating range is required to obtain the parameters of the function used to approximate the R(T) characteristic in that range. The instrument can then work with different thermistors, and the accuracy depends on the exactness of the approximation function and on the stability of the thermistor.

THERMISTORS COMBINED WITH RESISTORS

Combinations of thermistors and wire-wound resistors can be connected in networks (Figure 4.12g and 4.12h) to produce either a varying voltage or resistance that is linear with temperature (analog linearization). The basic equation for a divider network of R_1 and R_2 in series is $E_{out} = E_{in}\, R_1/(R_1 + R_2)$, where E_{out} is the voltage drop across R_1. When R_1 is a thermistor and E_{out} is plotted against temperature, the total curve is nonlinear and S-shaped. If R_1 is modified by the addition of another thermistor and resistor of proper values, linearity of the center section of the S curve can be extended to cover a relatively wide temperature range. This section then is considered to follow the general equation of a straight line. For the resistance mode, this would be $R_1 = MT + b$, where M is the slope in ohms per degree, T is the temperature in degrees F, and b is the value of R_1 when T = 0°F. The advantages of such a system are obvious.

SELF-HEATING EFFECT

Even if some applications use the current-time and voltage-current characteristics of a thermistor (thermistor self-heated, i.e., heated above room temperature), the resistance-temperature is the characteristic that accounts for most of temperature measurement applications. In this case, self-heating is

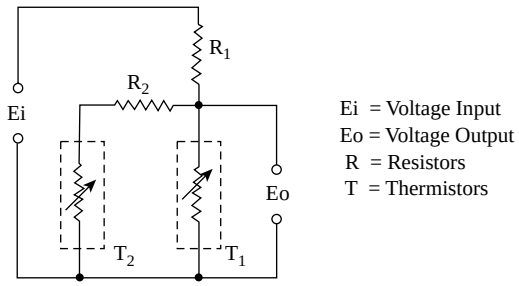

FIG. 4.12g
Two-thermistor network.

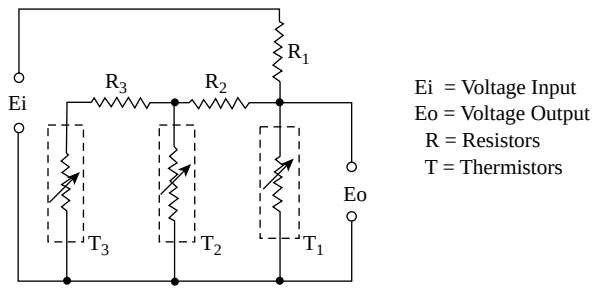

FIG. 4.12h
Three-thermistor network.

generally undesirable and operation is aimed as close as possible to zero power operation.

The electric circuits associated to a thermistor for conditioning purposes originate a current flow in the thermistor. If a small current flows through the thermistor, there is a negligible increase in its temperature due to this flow. The resistance can thus be measured and, since resistance is proportional to absolute temperature, the temperature can be inferred.

If the current flow is slowly increased, the heat generated within the sensor will gradually begin to raise its temperature above that of its environment. This in turn lowers its resistance and more current will flow. Eventually, the current input would reach a level where it is balanced by the heat output of the thermistor. At this point, sensor temperature would be 300 or 500°F (149 or 260°C) above ambient, and sensor resistance would have dropped to a value approximately 10^{-3} times its value at the original low current.

For most temperature measuring applications, self-heating is not a problem, since thermistor currents used are relatively low. If a current of higher magnitude is used, under fixed conditions, an offset allowance may be made for the self-heating effect. However, anything that affects the dissipation constant will change the offset. This could be the result of a number of things, including flow changes in the measured medium, changes in fluid composition, and the like.

The power dissipation constant of a thermistor element can vary from a few microwatts to several watts per degree of resultant temperature rise. In industrial units, a few degrees of self-heating can be expected for each milliwatt of resistive heating. As thermistors are made smaller and smaller in order

© 2003 by Béla Lipták

to increase their response times and to lower their thermal shunting, the effect of self-heating also rises. The I^2R temperature increase is a direct function of the dissipation constant in its mounting environment. Unlike resistance thermometers or TCs, thermistor resistance values are varied by varying their composition to suit the temperature span, range, and sensitivity desired for a given application.

APPLICATIONS

Other than temperature measurement, thermistors can be used in a number of applications where physical phenomena produce a temperature change. Such applications may recur to the current-time, voltage-current, or resistance-temperature characteristic of a thermistor. NTC thermistor applications based on current-time characteristic include surge protection and inrush current limiting. The voltage-current characteristic of a NTC is used namely in voltage regulation, anemometers, manometers, gas analyzers and fluid velocity, liquid level, and microwave power measurement. Utilization of the resistance-temperature characteristic of an NTC can be found in many domains from industry to medicine most of them related with temperature measurement.

PTC applications make general use of either the voltage-current characteristic (resettable fuses, heater and thermostat, liquid and flow sensing) or the current-time characteristic (motor starting, time delaying).

Today it is possible to look for a thermistor that better suits a specific application using the search capabilities available in some sites (e.g., www.globalspec.com/SpecSearch/SearchForm?Comp=16).

Thermistors can be connected to a microprocessor-based memory element and packaged as a portable element. These small micropacks can memorize the temperature history of batch reactor products or can travel with the process material through several steps in processing. When the temperature memory-pack unit is retracted from the process, it can be plugged into a computer for interrogation. This allows the plant to store the temperature history of each batch. The micropack weighs less than 100 g, has a battery life of about 500 hours, and has a temperature range of −40 to 302°F (−40 to 150°C).

CALIBRATION AND TESTING

In some applications, the accuracy requirements are not compatible with the interchangeable capabilities of thermistors. In such cases, thermistors must be calibrated.[4] Calibration is also required whenever an accurate resistance-temperature characteristic of a thermistor is needed.

The National Bureau of Standards has offered a limited calibration service for thermistors over an approximate temperature range of −150 to 200°F (−101 to 93°C). Calibration on the order of ±0.02°F (±0.01°C) is the rule. Users have claimed better than ±0.002°F (±0.001°C) stability over a 2-year period.

The following should be checked to test the operating parameters of thermistors:

1. Zero power resistance. This test is done under conditions that produce negligible heating of the sensor by test current. Most common sources of error are measurement of ambient temperature, self-heating error, thermocouple effects at junctions of dissimilar metals, and accuracy of test equipment.
2. Temperature coefficient of resistance. This is the rate of change of thermistor resistance vs. temperature at the desired temperature.
3. Voltage developed across the thermistor under conditions of thermal equilibrium with a constant current. A current-limiting resistor should be used. Maximum current should not be exceeded, even for short periods. The sensor should not be moved to a medium of lower thermal conductivity during a test. The problem is similar to that of measuring voltage across ordinary resistors; the difference is that stabilization times are longer and small currents are used.
4. Time required for a thermistor to pass a certain current after the voltage is applied.
5. Dissipation constant measurements. This is the ratio at a certain temperature of a change in power dissipation in a thermistor to the resultant body temperature change.
6. Thermal time constant. This is the time for a 63.2% change from initial to final temperatures when, subjected to a step change.

ADVANTAGES AND LIMITATIONS

Thermistors have the desirable characteristics of small size, narrow spans, fast response (their time constant can be under 1 s), and a very high sensitivity (about 2%/°F [4%/°C]), which usually increases as the measured temperature drops.

Thermistors do not need cold junction compensation because their resistance is a function of absolute temperature, and errors due to contact or lead-wire resistance are insignificant because of their relatively small values. Unlike RTDs and TCs, they are well suited for remote temperature sensing.

Thermistors are available in a great variety of configurations, are inexpensive, are not affected by polarity, and their stability increases with age. At present, they are typically more rugged and better able to support mechanical and thermal shock and vibration than other temperature sensors.

They are the most sensitive differential temperature detectors available.

© 2003 by Béla Lipták

Thermistors also have some disadvantages. Their interchangeability is moderate and they are not linear, although in modern data acquisition systems linearisation is no problem. They are also fragile and are not suited for wide spans. Their high resistance necessitates the use of shielded power lines, filters, or DC voltage.

One of the most serious limitations of thermistors is their lack of stability (drift and de-calibration) at higher temperatures. This is because semiconductors in general change their composition and develop migration, diffusion, or other decomposition properties at high temperatures. Therefore their use is limited to temperatures up to 600°F (316°C), and even at such temperatures extended exposure can cause drifts. (It should be noted that if a thermistor is operated at temperatures far below its maximum, it can be a very stable device.) Thermistors also have a low temperature limit, because as the temperature drops, their resistances rise to such levels that measuring it becomes difficult.

References

1. Steinhart, J.S. and Hart, S.R., "Calibration Curves for Thermistors," *Deep Sea Research*, 15:497, 1968.
2. Sapoff, M. et al., "The Exactness of Fit of Resistance-Temperature Data of Thermistors with Third-Degree Polynomials," *Temperature: Its Measurement and Control in Science and Industry*, Vol. 5, Schooley, J.F., Ed., New York: American Institute of Physics, 1982.
3. Nussbaum, A., "Semiconductor Thermometers," *Measurement*, September 1961.
4. NTC Thermistors, Thermometrics Application Note, www.thermometrics.com/assets/images/ntcnotes.pdf, Thermometrics, Edison, NJ.

Bibliography

Droma, C.R., "Thermistors for Temperature Measurements," in *Temperature: Its Measurement and Control in Science and Industry*, Vol. 3, New York: Van Nostrand Reinhold, 1962.

Fraden, J., *Handbook of Modern Sensors*, 2nd ed., Heidelberg: Springer-Verlag, 1997.

German Standards Committee (DNA), Standard DIN 43760, "Fundamental Values of Measuring Resistors and Resistance Thermometers," Berlin, 1980.

Green, C.B., "Thermistors as Primary Temperature Elements," in *Process Instruments and Controls Handbook*, Consodine, D.M., Ed., New York: McGraw-Hill, 1957.

Handbook of Thermistor Applications, Springfield, NJ: Victory Engineering Corp., 1968.

Hashemian, H.M. and Peterson, K.M., "Assuring Accurate Temperature Measurement," *InTech*, October 1989.

Hormuth, G.A., "Ways to Measure Temperature," *Control Engineering*, Reprint No. 948, 1971.

Instrumentation and Control Systems Engineering Handbook, Blude Ridge Summit, PA: TAB Books, 1978.

Kerin, T.W. and Katz, E.M., "Temperature Measurement in the 1990s," *InTech*, August 1990.

Leewis, W., "The International Temperature Scale of 1990," Paper #91–0302, Instrumentation, Systems, and Automation Society Conference, Toronto, 1991.

McGee, T.D., *Principles and Methods of Temperature Measurement*, 1st ed., New York: Wiley Interscience, 1988.

Michalski, L., et al., *Temperature Measurement*, 2nd ed., London: John Wiley & Sons, 2001.

© 2003 by Béla Lipták

4.13 Thermocouples

T. J. CLAGGETT, R. W. WORRALL (1969, 1982) **B. G. LIPTÁK** (1995, 2003)

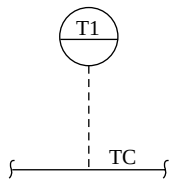

Flow Sheet Symbol

Linearity: Thermocouples are nonlinear devices. They generate from 10 to 60 μV/°C temperature change.

Temperature Ranges: –346 to 4240°F (–210 to 2338°C) with nine types covering various ranges as listed in Tables 4.1a, 4.1c, and 4.13l

Temperature Spans: See Table 4.13m. Minimum recommended span is 25°C (45°F) and is available only in types E, J, K, and T. For types S and R, the minimum span is 360°F (200°C).

Inaccuracy: The total error is the sum of the thermocouple wire error (see Table 4.13m), the extension wire error and the signal conditioning or transmitter error.

For standard thermocouple, the error ranges from ±2 to 5°F (1 to 2.8°C); for special thermocouple, half as much.

The extension wire error varies with its length and can be equal or more than the thermocouple error.

The transmitter error is usually 0.15% of span with standard and 0.05% with intelligent transmitters, or the sum of the cold junction (CJ) and the minimum absolute error (MAE), whichever is greater. With narrower spans the sum of the CJ+MAE error is likely to be the determining one and can be calculated as the sum of CJ = 0.25°C (0.45°F) and MAE = 0.2°C (0.36°F) for types T, J, E, and K; 0.6°C (1.08°F) for types R and S; and 0.8°C (1.44°F) for type B.

Costs: $1 to $15 for beads; $25 to $60 for detachable probe assemblies with handles, used in the laboratory. A thermocouple provided with a stainless steel thermowell costs about $200, while a thermocouple element, which is integral with a transmitter, can range from $750 to $2000, depending on its design and features

Partial List of Suppliers:

4B Components Ltd. (www.go4b.com)
ABB Inc.-Instrumentation (www.abb.com/us/instrumentation)
Acces I/O Products (www.accesioproducts.com)
Accutech (www.savewithaccutech.com)
Action Instruments (www.actionio.com)
Altek Industries (www.altekcalibrators.com)
Ametek Aerospace (www.ametekaerospace.com)
Analab LLC (www.analab1.com)
APT Instruments (www.aptinstruments.com)
Ari Industries (www.ariindustries.com)
Athena Controls (www.aethnacontrols.com)
Automatic Timing & Controls (www.automatictiming.com)
Barber Colman (www.barber-colman.com)
Barnant Co. (www.barnant.com)
Burns Engineering (www.burnsengineering.com)
Chino Works America Inc. (www.chinoamerica.com)
Chromalox (www.mychromalox.com)
CMI Inc. (www.cmi-temp.com)
Conax Buffalo (www.conaxbuffalo.com)
Dickson (www.dicksonweb)

© 2003 by Béla Lipták

Dresser Instrument (www.dresserinstruments.com)
Dwyer Instruments (www.dwyer-inst.com)
Ecom Instruments (www.ecom-ex.com)
Eurotherm Controls (www.eurotherm.com)
Exergen Corp. (www.exergen.com)
Extech Instruments (www.extech.com)
Flow Research (www.flowresearch.com)
Flow-Tech Inc. (www.flowtechonline.com)
Fluke Corp. (www.fluke.com)
FMC Blending & Transfer (www.fmcblending.com)
Foxboro-Invensys (www.foxboro.com)
Gaumer Process (www.gaumer.com)
Graybar Electric (www.graybar.com)
Hach Co. (www.hach.com)
Honeywell Industry Solutions (www.iac.honeywell.com)
Honeywell Sensing and Control (www.honeywell.com/sensing)
Ice Qube (www.iceqube.com)
Imaging & Sensing Technology (www.istimaging.com)
Instrumentation Group (www.instrumentationgroup.com)
Jensen (www.jensentools.com)
JMS Southeast (www.jms-se.com)
Jumo Process Control (www.jumousa.com)
Kobold Instruments (www.koboldusa.com)
Lake Shore Cryotronics (www.lakeshore.com)
Love Control (www.love-controls.com)
Marsh Bellofram (www.marshbellofram.com)
Martel Electronics (www.martelcorp.com)
Minco Products (www.minco.com)
Monarch Instrument (www.monarchinstrument.com)
Moore Industries (www.miinet.com)
MTI (www.mtisensors.com)
National Basic Sensor (www.nationalbasicsensor.com)
Newport Electronics (www.newportus.com)
Ogden Mfg. (www.ogdenmfg.com)
Omega (www.omega.com)
Omron Electronics (www.omron.com/oei)
Phonetics (www.sensaphone.com)
Pyromation (www.pyromation.com)
Pyrometer Instrument (www.pyrometer.com)
RDF Corp. (www.rdfcorp.com)
Ronan Engineering (www.ronan.com)
Rosemount Inc. Div. of Emerson (www.rosemount.com)
Sandelius Instrument (www.sandelius.com)
Scannivalve Corp. (www.scannivalve.com)
Testo Inc. (www.testo.com)
Thermo Electric (www.thermo-electric-direct.com)
Transmation (www.transmation.com)
Triplett Corp. (www.triplett.com)
TTI (www.ttiglobal.com)
United Electric Controls (www.ueonline.com)
Wahl Instruments (www.palmerinstruments.com/wahl)
Watlow (www.watlow.com)
Weed Instrument (www.weedinstrument.com)
Wika Instrument (www.wika.com)
Winters Instruments (www.winters.com)
Yokogawa Corp. of America (www.yca.com)
The most popular RTD based transmitter suppliers are: Rosemount-Emerson, Pyromation, Honeywell, Moore Industries;
Vendor list: www.temperatures.com/tcvendors.html.

© 2003 by Béla Lipták

Imparting heat to the junction of two dissimilar metals causes a small continuous electromotive force (EMF) to be generated. One of the simplest of all temperature sensors, the thermocouple (TC) depends upon the principle known as the Seebeck Effect. T.J. Seebeck discovered this phenomenon in 1821, and in the ensuing years the thermocouple has become the most widely used electrical temperature sensor. The word is a combination of *thermo* for the heat requirement and *couple* denoting two junctions.

A TC is an assembly of two wires of unlike metals joined at one end, designated as the hot end. At the other end, referred to as the cold junction, the open circuit voltage or Seebeck voltage is measured. This voltage (EMF) depends on the temperature difference between the hot and the cold junctions and on the Seebeck coefficients of the two metal wires.

THEORY OF OPERATION

An ordinary TC consists of two different kinds of wires, each of which must be made of a homogeneous metal or alloy. The wires are fastened together at one end to form a measuring junction, normally referred to as the hot junction, since a majority of the measurements are made above ambient temperatures. The free ends of the two wires are connected to the measuring instrument to form a closed path in which current can flow. After the TC wires connect to the measuring instrument, the junction inside is designated as reference junction, or the cold junction (see Figure 4.13a)

The EMF developed at wire junctions is a manifestation of the Peltier Effect and occurs at every junction of dissimilar metals within the measuring system. This effect involves the liberation or absorption of heat at the junction when a current flows across it. The resultant heating or cooling depends upon the direction of current flow. Applications of this principle are becoming increasingly useful in electric heating and refrigeration.

A second EMF develops along the temperature gradient of a single homogeneous wire. This is the Thomson Effect. It is most important that each section of wire in a given circuit be homogeneous. This is because if there is no change in the composition or physical properties along its length, the circuit EMF depends only upon the metals employed and the temperature of their junction. Therefore, the circuit EMFs are independent of both length and diameter of wires. Another reason for requiring homogeneous wire is that thermal EMFs within a single strand passing from a warmer to a cooler area, or vice versa, will cancel each other.

Further, if both junctions of a homogeneous metal are held at the same temperature, the metal does not contribute to the net EMF of a circuit. Since some TCs are made of expensive metals, this fact can be used to cut costs by supplying copper extension wire for long runs.

It follows, then, that by holding temperatures constant at all junctions except one within a given circuit, we can measure temperature as a function of the hot junction temperature with respect to the cold junction temperature.

TCs drift, because of the junction of the two dissimilar metals that degrade. If used at low temperatures, this may only be a few degrees per year and can be calibrated out of the system. At higher temperatures, they degrade more quickly. Further, drift can also be caused by long extension wires; these wires are often of lesser quality than the TC wires and can contribute twice the error if subjected to harsh environmental conditions. Before the use of transmitters, some plants have replaced their extension wires on a regular basis to minimize this effect.

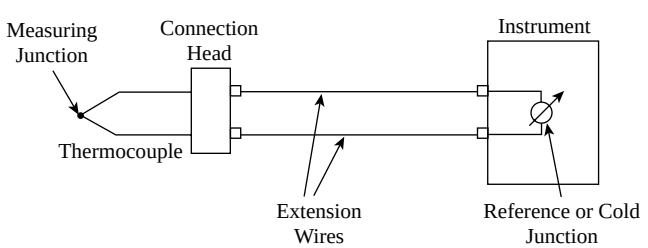

FIG. 4.13a
Thermocouple terminology.

Interpreting the Generated Voltage

The TC reads the difference between the temperatures of its measuring and reference junctions. (Actually, it is a general limitation of human beings that we cannot measure anything in the absolute; all we can do is to compare a known quantity against an unknown.) If we know what the reference temperature is, we can identify the unknown process temperature by measuring the voltage generated by the TC:

$$\text{unknown temperature} = (\text{voltage}/\text{Seebeck coefficient}) + \text{reference temperature} \qquad \textbf{4.13(1)}$$

The process temperatures can be obtained from the voltage read by either going to a graph (Figure 4.13b) or, for more accuracy, by going to TC tables that list the voltages corresponding to each temperature with each TC type (such tables are provided at the end of this section).

Unfortunately, the voltage-to-temperature relationship is not a straight-line function, and the Seebeck coefficient is not a constant (Figure 4.13c). For some TCs over certain temperature ranges, such as type K over the range 0 to 1000°C (32 to 1832°F), the Seebeck coefficient is relatively constant (about 40 μV/°C), but in general it changes with temperature. This in the past has resulted in unique scales for each type of TC or in the need to use tables and curves to convert millivolts into temperature. These days the memory capability of the microprocessors has resolved all these problems, and what used to be tedious and time-consuming is now quick and easy. In short, the nonlinear nature of the TCs is no longer a problem.

The same cannot be said about the weakness of the TC signal. As shown in Figure 4.13c, a platinum thermocouple will generate only about 10 μV/°C. On the other hand, even

© 2003 by Béla Lipták

the best industrial transmitters have a minimum span of 1 mV and a minimum absolute error of about 0.01 mV, which is 10 μV. Therefore, it is difficult to obtain a measurement using industrial transmitter and platinum TCs, which would have less than a 1°C error or have a span that is narrower than 60°F (35°C). This is usually acceptable when measuring higher temperatures but is not acceptable at low temperatures or when the temperature span is narrow. For this reason, TCs are not recommended and resistance temperature detectors (RTDs) are used for narrow span or small temperature difference measurements.

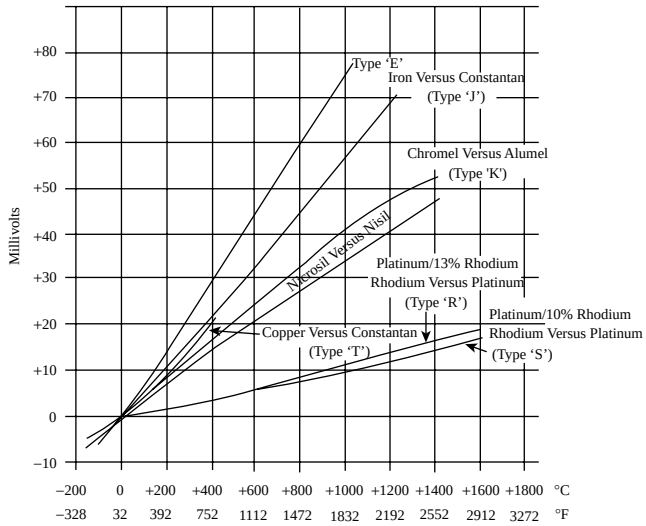

FIG. 4.13b
The millivoltage generated by thermocouples varies with wire materials and is a nonlinear function of temperature.

Laws of Intermediate Temperatures and Metals

The law of intermediate temperatures states that the sum of the EMFs generated by two TCs—one with its junctions at 32°F (0°C) and some reference temperature, the other with its junctions at the *same* reference temperature and at the measured temperature—will be the same as that produced by a single TC, having its junctions at 32°F (0°C) and the measured temperature.

This concept is illustrated in Figure 4.13d where the measured temperature is 700°F (371°C). By adding an EMF equal to that produced by thermocouple A in Figure 4.13d (with its junctions at 32ºF [0°C] and the reference temperature) to that of thermocouple B, a total EMF equivalent to that generated by the hypothetical thermocouple C results. In most pyrometers, this is done by a temperature-sensitive resistor, which measures the variations in reference junction temperature caused by ambient conditions, and automatically provides the necessary EMF by means of a voltage drop produced across it. Thus, the instrument calibration becomes independent of reference temperature variations.

The law of intermediate metals states that the introduction of a third metal into the circuit will have no effect upon the EMF generated so long as the junctions of the third metal with the other two are at the same temperature. Any number of different metals can be introduced, providing all the junctions are at the same temperature. Thus, in Figure 4.13e the circuits shown all generate the same EMF, even though the second and third circuit diagrams show materials C, D, E, and F inserted between A and B.

Cold Junction Compensation

When a readout device is employed, it converts the EMF produced by the temperature difference between the hot and cold junctions to record or otherwise display the temperature of the hot junction. To prevent errors due to secondary EMFs produced by variations of temperature at the cold junction

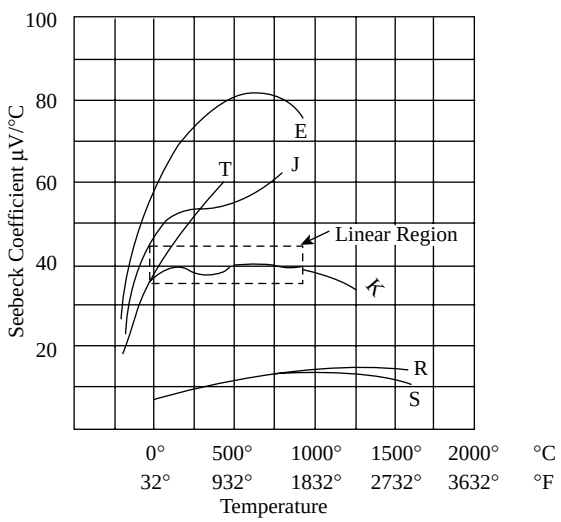

Type	Seebeck Coefficient at Room Temperature (µV/°C)
J	50
K	40
E	60
R	11
S	10
T	38

FIG. 4.13c
The Seebeck coefficient gives the amount of voltage generated (in microvolts) by a one degree change in temperature. The value of the Seebeck coefficient varies not only with thermocouple type but also with temperature.[1]

© 2003 by Béla Lipták

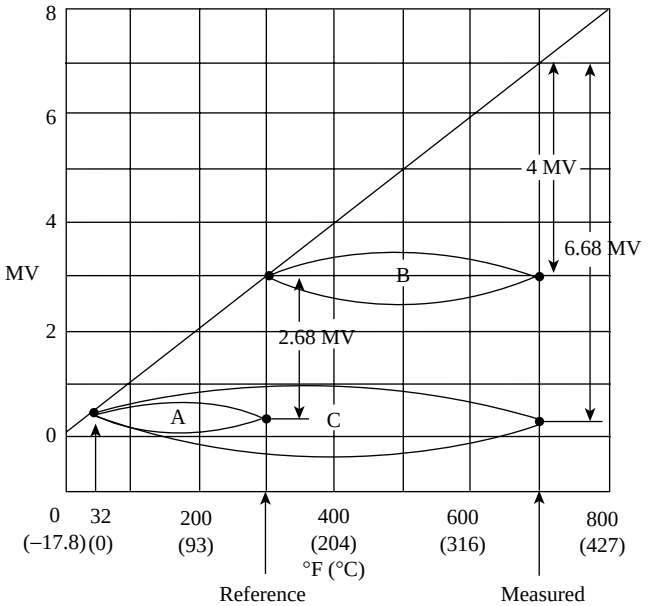

FIG. 4.13d

According to the law of intermediate temperatures, the EMF of thermocouple A plus the EMF of thermocouple B is equal to the EMF of thermocouple C.

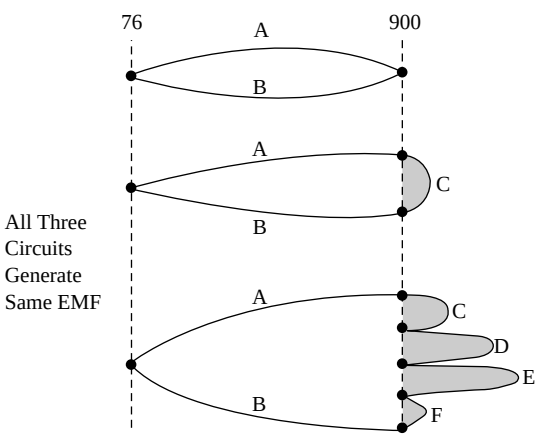

FIG. 4.13e

No harmful effect is caused by introducing any number of metals at a thermocouple junction if all connections are at the same temperature.

and within the readout device, these EMFs must be compensated for. One method is to hold the cold junction at a constant temperature, which can be done in laboratories with an ice bath (Figure 4.13f). An oven can also be used, although keeping an oven temperature constant presents another set of problems.

Neither an ice bath nor an oven reference is practical in an industrial environment. In the temperature transmitters used in the process industry, the ice bath reference must be replaced by a variable ambient reference junction. This is achieved by making two changes to Figure 4.13f. The first

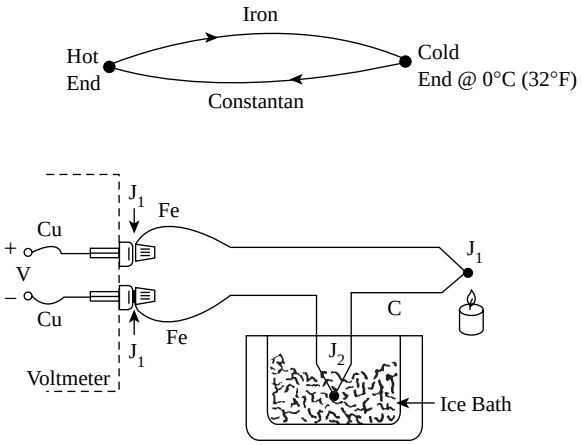

FIG. 4.13f

When an iron-constantan thermocouple measures the process (J_1) and an identical iron-constantan thermocouple reference junction (J_2) is placed in an ice bath, the connection to the readout voltmeter results in two added junctions, J_3 and J_4.[1]

change is to insert a short copper wire between both voltmeter terminals and the TC leads and to place these new junctions on an isothermal block (Figure 4.13g). This change eliminates the junctions J_3 and J_4 shown in Figure 4.13f because in Figure 4.13g copper is joined to copper at these points. By placing the new J_3 and J_4 junctions on an isothermal block, as shown in Figure 4.13g, their effects cancel out as they are in opposition to each other and are at the same temperature.

The second change was to place the reference junction not in an ice bath (Figure 4.13f), but on the isothermal block. From the law of intermediate metals (Figure 4.13e) we know that when junctions in series are at the same temperature, their number makes no difference. Therefore, J_4 and J_{REF} in Figure 4.13g can be replaced by J_{REF} only.

Figure 4.13h shows the software compensation of the reference junction. Here the voltmeter reads the equivalent of thermocouple B in Figure 4.13d, while the thermometer R_T reads the actual reference temperature of the isothermal block. The thermometer used to measure T_{REF} can be a thermistor (see Section 4.12), an RTD (see Section 4.10), or an integrated circuit transistor. Once T_{REF} is accurately measured (usually within 0.25°C or 0.45°F), the associated software determines the corresponding millivoltage that a TC *would have generated* if its hot junction were at T_{REF} and its cold junction were in an ice bath (thermocouple A in Figure 4.13d). The sum of A and B then represents the measured process temperature (referenced to ice) and can be looked up in the type of tables that are provided at the end of this section.

One might ask, why use a TC at all if another thermometer is needed to measure the reference temperature? The answer to that question is simple: Do not use a thermocouple if another thermometer can measure the temperature. Unfortunately, the sensors, which can accurately detect the ambient temperature (T_{REF}) are not suited for the measurement of high

© 2003 by Béla Lipták

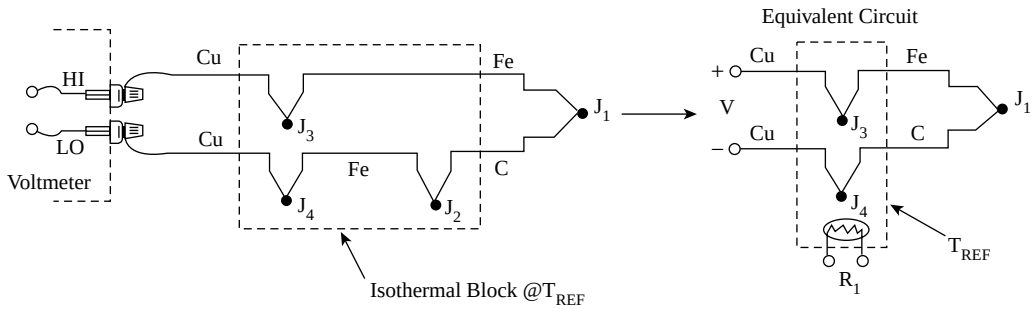

FIG. 4.13g

By using an isothermal block and by inserting copper wires at the voltmeter terminal, an equivalent circuit is arrived at which does not have an ice bath reference.[1]

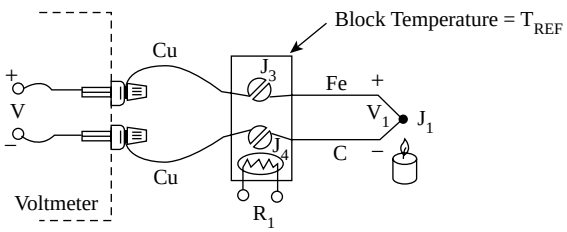

FIG.4.13h

The industrial equivalent of the ice bath reference shown in Figure 4.13f.[1]

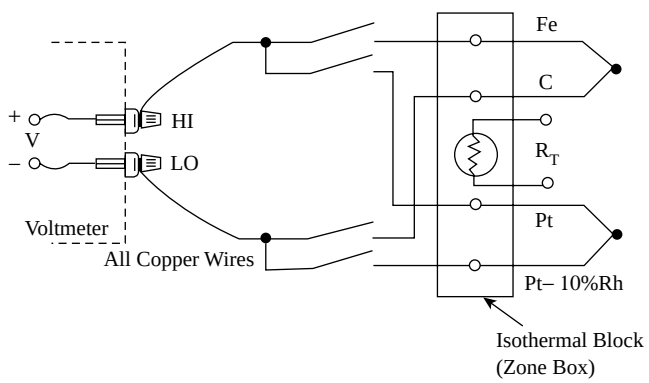

FIG. 4.13i

When many thermocouples are multiplexed, a single reference thermometer is sufficient to provide software compensation.[1]

temperatures or wide spans. For these applications the natural choice is the TC, and when it is used, it must be compensated.

Multiplexing

The cost and complexity of software compensation is reduced when many TCs are multiplexed into the same readout device (Figure 4.13i). In that case, a large number of TCs can be terminated on the same isothermal block and a single thermometer can serve to provide software compensation for all. The disadvantages of TC multiplexing include the necessity of transporting the low-level signals over some distance to the multiplexer (which can introduce common and normal mode noise, discussed later), the relatively high costs of thermocouple lead wires, and the added error due to the variable contact resistances of the multiplexer. Even with gold-plated contacts, there will be at least 1 μV drop through the contacts, which in case of platinum thermocouples corresponds to an error of about 0.2°F (0.1°C).

Hardware Compensation

Prior to the advent of microprocessors and the associated software compensation of TCs, hardware compensation was used. Hardware compensation can be viewed as inserting a battery that cancels out offset voltage produced by the reference junction. These commercially available circuits provide an electronic ice point reference for one or many TCs. Their main advantage relative to software compensation is speed because the computation time is eliminated. The main disadvantage of hardware compensation is that each gain resistor is suited to compensate only a particular type of TC, while software compensation accepts any TC. In practice, hardware compensation is usually accomplished by using resistors whose combined temperature resistance coefficient curves match those of the voltage-temperature curves produced by the reference junctions, canceling any variations in the cold junction temperature.

MEASURING THE EMF GENERATED

The Seebeck EMF can be measured with either a millivoltmeter (Figure 4.13j) or a potentiometer (Figure 4.13k) circuit. We should remember that the thermocouple measures only the difference between its reference and hot junctions. How closely it matches the accepted EMF curve has a bearing on accuracy. EMF tables are usually based upon 32°F (0°C) reference temperatures for convenience (see tables at the end of this section).

To relieve the control engineer of the problem of compensating for temperature instability at the reference junction, a copper or nickel resistor can be placed in a bridge so that

© 2003 by Béla Lipták

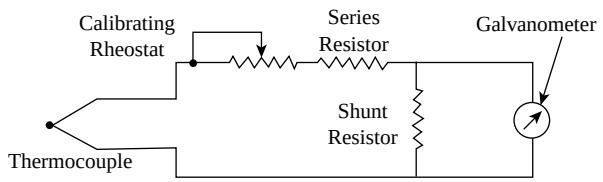

FIG. 4.13j
Millivoltmeter circuit.

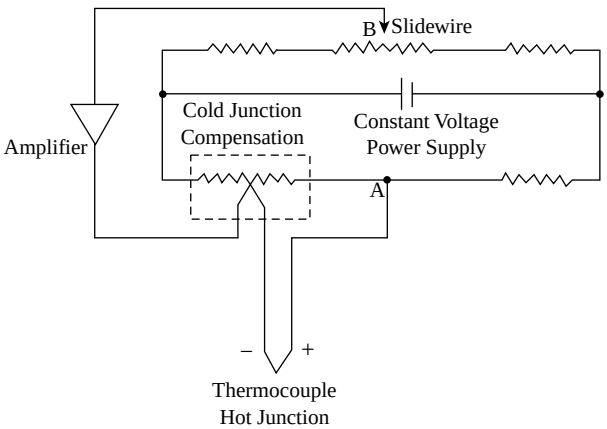

FIG. 4.13k
Potentiometer circuit.

the TC EMF is opposed by an EMF corresponding to the required ambient temperature correction. Operating on the null-balance principle, the resulting potentiometer (Figure 4.13k) tends to reduce any voltage difference between points A and B to zero.

Transmitter Location and Noise

As discussed earlier, TCs produce a very small microvolt output per degree change in temperature. This output is very sensitive to environmental influences, particularly if long extension wires are used. It is recommended to minimize this length, which can be best achieved by mounting the transmitter right inside the thermocouple head.

Electromagnetic interference from motors and electrical distribution and especially radio frequency interference (RFI) from walkie-talkies can be the cause of large errors in measurement. Therefore, the transmitters or other TC readout instruments must have rigid RFI immunity specifications to minimize these effects. TC readouts are considered to be of good quality if their common mode noise rejection is about 100 DB, their normal mode rejection is about 70 DB, and their RFI immunity is 10 to 30 V/m.

Intelligent Transmitters

State-of-the-art transmitters, digital buses, and networks have been discussed in Sections 4.1 and 4.10. The reader is referred to those sections and also to the concluding paragraphs at the end of this section.

THERMOCOUPLE TYPES

Based on possible combinations of metals, there could be countless numbers of thermocouples, but there are relatively few (see Tables 4.13l and 4.13m). Things that determine a metal's usefulness in TC wire include:

1. Melting points
2. Reaction to various atmospheres
3. Thermoelectric output in combination with other metals
4. Electrical conductance, the reciprocal of resistance (listed in Table 4.13n)
5. Stability
6. Repeatability
7. Cost
8. Ease of handling and fabrication

ISA Types J, S, and T

Iron-constantan (type J) can be used in reducing atmospheres. These thermocouples provide a very nearly linear EMF output. They are the least expensive commercially available type.

The platinum-platinum 90%/rhodium 10% (type S) TC is most important. It is used to define the International Temperature Scale between 1166.9°F (630.5°C), the point at which antimony freezes, and 1945.4°F (1063°C), the gold point. This TC is not limited to the above range. It can be used from about 300 to 3215°F (150 to 1768°C) with excellent results. Industrial thermocouples ("Special" in Table 4.13m) of this material will match the standard calibration curve to better than ±0.25%.

Copper-constantan (type T) can be used in either oxidizing or reducing atmospheres. TCs of this type exhibit a high resistance to corrosion from moisture, provide a relatively linear EMF output, and are good from the medium to the very low temperature range.

ISA Types B, E, K, R, and N

Several other TCs are commonly used (see Tables 4.13l and 4.13m), including platinum-platinum 13% rhodium (type R) and platinum 30% rhodium-platinum 6% rhodium (type B), which are recommended for use in oxidizing atmospheres. They are relatively easily contaminated in other atmospheres.

Chromel-alumel (type K) can be used in oxidizing atmospheres. It is the most linear TC in general use.

Chromel-constantan (type E) TCs provide the highest EMF per degree of temperature change. However, it also tends to drift more than the others. It can be used in oxidizing atmospheres.

Tungsten-tungsten 26% rhenium TCs can be used to measure the highest temperatures. It cannot be used in oxidizing atmospheres, and it is also brittle and hard to handle. It is usually used in vacuum or in clean inert gas applications.

A relatively new base-metal thermocouple is designated type N (Nicrosil vs. Nisil). It provides stability as good as

© 2003 by Béla Lipták

TABLE 4.13l
Thermocouple Comparison Table

ISA Type Designation	Positive Wire (Numbers = Percentages)	Negative Wire (Numbers = Percentages)	Millivolts per °F	Recommended Range Limits Temp °F* Min.	Recommended Range Limits Temp °F* Max.	Scale Linearity	Atomosphere Environment Recommended	Favorable Points	Less Favorable Points
B	Pt70-RH30	Pt94-Rh6	.0003–.006	32	3380	Same as for type R couple	Inert or slow oxidizing	—	—
E	Chromel	Constantan	.015–.042	–300	1800	Good	Oxidizing	Highest EMF/°F	Larger drift than other base metal couples
J	Iron	Constantan	.014–.035	32	1500	Good; nearly linear from 300–800	Reducing	Most economical	Becomes brittle below 32°F
K	Chromel	Alumel	.009–.024	–300	2300	Good; most linear of all TCs	Oxidizing	Most linear	More expensive than T or J
R	Pt87-Rh13	Platinum	.003–.008	32	3000	Good at high temps. poor below 1000°F	Oxidizing	Small size, fast response	More expensive than type K
S	Pt90-Rh10	Platinum	.003–.007	32	3200	Same as R	Oxidizing	Same as R	More expensive than type K
T	Copper	Constantan	.008–.035	–300	750	Good but crowded at low end	Oxidizing or reducing	Good resis. to corrosion from moisture	Limited temp.
Y	Iron	Constantan	.022–.033	–200	1800	About same as type J	Reducing	—	Not industrial standard
—	Tungsten	W74-Re26	.001–.012	0	4200	Same as R	Inert or vacuum	High temp.	Brittle, hard to handle, expensive
—	W94-Re6	W74-Re26	.001–.010	0	4200	Same as R	Inert or vacuum	Same as above	Slightly less brittle than above
—	Copper	Gold-Cobalt	.0005–.025	–450	0	Reasonable above 60 K	—	Good output at very low temp.	Expensive lab.-type TC
—	Ir40-Rh60	Iridium	.001–.004	0	3800	Same as R	Inert	—	Brittle, expensive

*$°C = \frac{°F - 32}{1.8}$

© 2003 by Béla Lipták

TABLE 4.13m
Thermocouple Errors and Spans

TC Type	Measured Temperature Range in °F*	TC Wire Errors for Wires of Different Qualities*		Transmitter Error is Additional and in the Case of "Smart" Units Is ±0.05% of Span or Value Given Below, Whichever Is Larger*	Recommended Span Limits*	
		Standard	Special		Min.	Max.
B	32–3380	NA	NA	±1.89°F	63°F	2020°F
E	32–600 600–1600	±3°F ±0.5%	— —	±0.81°F	45°F	2100°F
J	32–530 530–1400	±4°F 0.75%	±2°F ±0.375%	±0.81°F	45°F	2500°F
K	32–530 530–2300	±4°F ±0.75%	±2°F ±0.375%	±0.81°F	45°F	2750°F
R	32–1000 1000–2700	±5°F ±0.5%	±2.5°F ±0.25%	±1.53°F	360°F	2950°F
S	32–1000 1000–2700	±5°F ±0.5%	±2.5°F ±0.25%	±1.53°F	360°F	2900°F
T	–300 to –75 –150 to –75 –75–200 200–700	— ±2% ±1.5°F ±0.75%	±1% ±1% ±0.75°F ±0.375%	±0.81°F	45°F	1025°F
N	32–530 530–2300	±4°F ±0.75%	±2°F ±0.4%	NA	NA	NA

*$°C = \frac{°F - 32}{1.8}$

TABLE 4.13n
Resistance of Various Thermocouple Wire Sizes in Ohms per Double Foot of Wire Length at 20°C (68°F)

AWG No.	Diameter Inches	Thermocouple Type								
		K	J	T	E	R	S	G(W)	C(W5)	D(W3)
6	0.1620	0.23	0.014	0.012	0.027	0.007	0.007	0.008	0.009	0.009
8	0.1285	0.037	0.022	0.019	0.044	0.011	0.011	0.012	0.015	0.015
10	0.1019	0.058	0.034	0.029	0.069	0.018	0.018	0.020	0.023	0.022
12	0.0808	0.091	0.054	0.046	0.109	0.029	0.028	0.031	0.037	0.035
14	0.0641	0.146	0.087	0.074	0.175	0.047	0.045	0.049	0.058	0.055
16	0.0508	0.230	0.137	0.117	0.276	0.073	0.071	0.078	0.092	0.088
18	0.0403	0.374	0.222	0.190	0.448	0.119	0.116	0.126	0.148	0.138
20	0.0320	0.586	0.357	0.298	0.707	0.190	0.185	0.200	0.235	0.220
24	0.0201	1.490	0.878	0.753	1.780	0.478	0.464	0.560	0.594	0.560
26	0.0159	2.381	1.405	1.204	2.836	0.760	0.740	0.803	0.945	0.890
30	0.0100	5.984	3.551	3.043	7.169	1.910	1.850	2.030	2.380	2.260
32	0.0080	9.524	5.599	4.758	11.31	3.040	1.960	3.220	3.800	3.600
34	0.0063	15.17	8.946	7.660	18.09	4.820	4.660	5.100	6.040	5.700
36	0.0050	24.08	14.20	12.17	28.76	7.640	7.400	8.160	9.600	9.100
38	0.0040	38.20	23.35	19.99	45.41	11.95	11.60	12.90	15.30	15.30
40	0.0031	60.88	37.01	31.64	73.57	19.30	18.60	20.60	24.40	23.00

© 2003 by Béla Lipták

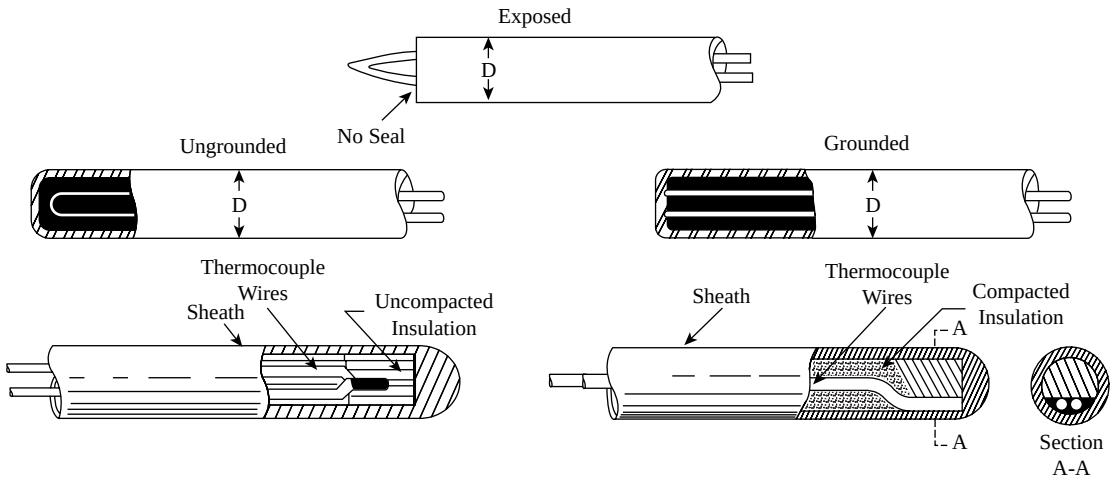

FIG. 4.13o
Thermocouple measuring junction designs. (Courtesy of ARI Industries Inc.)

the more expensive noble metal TCs up to about 2200°F (1204°C), where type K starts to become unstable. The stability of type N TCs is due to increased percentages of chromium, silicon, and magnesium.

THERMOCOUPLE CONSTRUCTION AND PROTECTION

There are some applications where a bare TC with an exposed junction may be used either by itself or inserted into a protective well. For most process applications, the TC is manufactured with a protective outer sheath that uses an insulating material to electrically separate the TC from the sheath and provide mechanical and environmental protection. In some cases the TC junction is placed in direct contact with the tip of the sheath to increase speed of response.

These sensors demand the use of an electrically isolated measurement circuit. Even insulated TCs will eventually suffer from a breakdown of the insulation, and the TC tip will contact the sheath and associated well. It is virtually assured that a ground loop will be present that will cause measurement errors. These errors are usually insidious in that they usually vary over time and may go unnoticed. Recommended practice is to always use an instrument with full isolation to eliminate this concern.

Measuring Junction Designs

A TC is only as accurate as the wire from which it is made. Therefore, it is common practice for best accuracy to make all TCs from the same coil of wire. This assumes uniformity of the wire. Most manufacturers offer either standard or special calibrations, which imply more care in selection of wire, handling, and manufacturing. The careful selection of materials, proper construction, installation, and handling alone will not maintain highest accuracy; an adequate checking program is also a must.

In order to protect the TC wire, it is usually covered by a thermal insulation and a sheath for mechanical protection. The purpose of this design is to expose only the measuring junction of the TC to the temperature of the process. This can be achieved in three different ways (see Figure 4.13o). The exposed thermocouple junction gives the best speed of response; the time constant can be less than a 1 s with small (down to 0.01 mm diameter) TCs. Their main limitation is that the process materials must not be corrosive to the TC wires.

In the ungrounded junction design, the TC wire is physically insulated from the sheath by insulation material (usually magnesium oxide powder). These designs can be used in corrosive processes, but their speed of response is slow. The grounded junction design is also protected from the corrosive process, but its thermal time constant is shorter (by a few seconds, depending on mass).

Extension Wires

The thermocouple extension wire is usually insulated with Teflon, polyvinyl chloride, nylon, rubber, asbestos, or fiberglass. For higher temperatures refrasil or nextel are recommended. Teflon is used when the TC extension wire must be submerged under water or if resistance to solvent, corrosion, flame, or humidity is critical. Individually insulated duplex wires are usually provided with a protective outer jacket, which can be wrapped, extruded, or stranded. The extension wire to be used for types, E, J, K, and T TCs are designated as EX, JX, KX, and TX extension wires and should extend all the way to the cold junction of the loop.

With connections correctly made, copper extension wire can be used over long distances. However, it is recommended that iron-constantan and copper-constantan always be used with lead wire of the same material. To guard against mistakes in connection, industry practice is to color-code the wires, with the *negative* lead always *red.* Smaller gauge wire provides faster response, but heavier gauge wires last longer and resist contamination or deterioration at high temperatures.

© 2003 by Béla Lipták

Sheath Materials

The sheath material can be 304 stainless steel if the process temperature is under 1650°F (900°C) and the process is not highly corrosive. In furnaces that operate at up to 2100°F (1150°C), Inconel 600 sheathing is recommended if the atmosphere is oxidizing and there is no sulfur in the atmosphere. Platinum-rhodium alloy sheaths are used up to 3000°F (1650°C) in oxidizing furnaces if no silica or halogens are present. Molybdenum sheaths can be used up to 4000°F (2205°C) to detect molten metal or glass temperatures, but only in oxygen-free vacuum or inert-gas-filled processes. Tantalum sheaths can be used up to 4500°F (2482°C), but only in reducing or noble gas atmospheres where no oxygen is present.

The sheath is usually strong enough to stand up to high pressure (up to 50,000 PSIG, or 3,450 bars), but it is usually not used without a thermowell because the user wants to be able to take out the TC without opening up the process. Figure 4.13p illustrates some high-speed TC assemblies without thermowells.

Thermowells

Protecting tubes or wells are supplied (Figure 4.13q) to protect TCs from harmful atmospheres, corrosive fluids, or mechanical damage; to support the TC; or to permit TC entry into a pressurized system. These tend to reduce the speed of response of the TC, so small-mass, thin-wall, or needle-type installations are supplied where feasible (Figure 4.13p). Disposable-tip thermocouples are supplied in furnace applications (Figure 4.13r). They can also be peened or welded

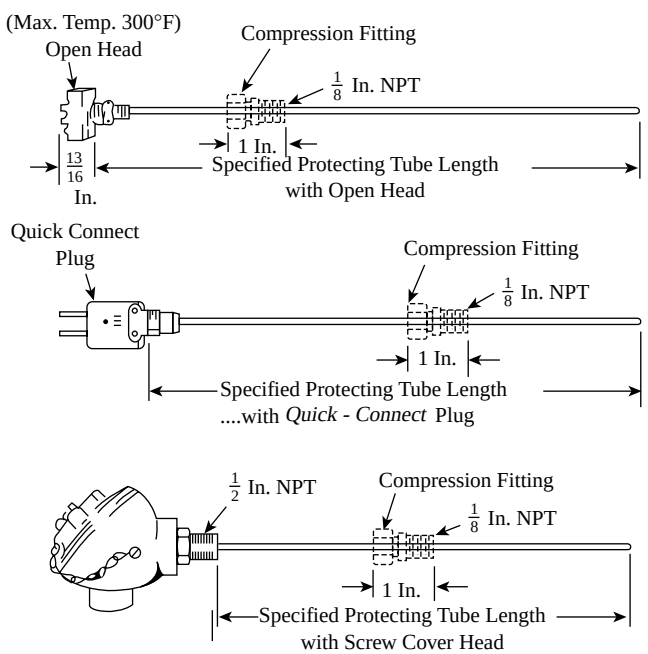

FIG. 4.13p
High-speed small O.D. thermocouple assemblies with stainless steel protecting sheath.

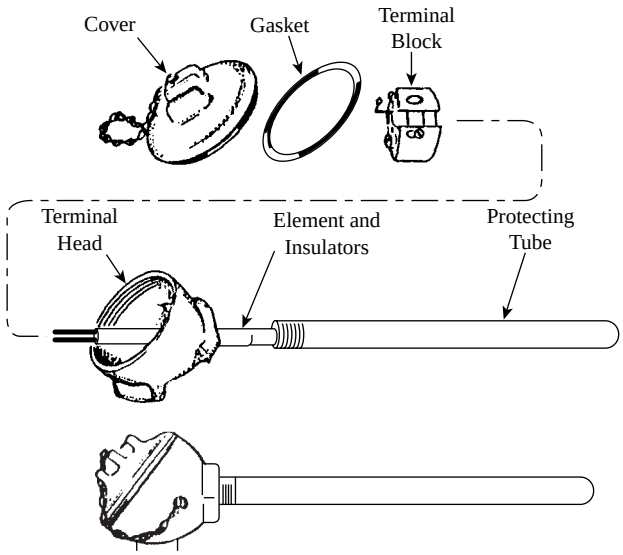

FIG. 4.13q
Exploded view of thermocouple assembly and protecting tube (top); complete assembly with protecting tube (bottom).

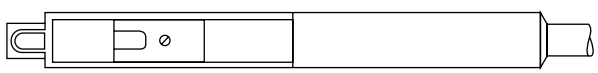

FIG. 4.13r
Molten steel expendable thermocouple.

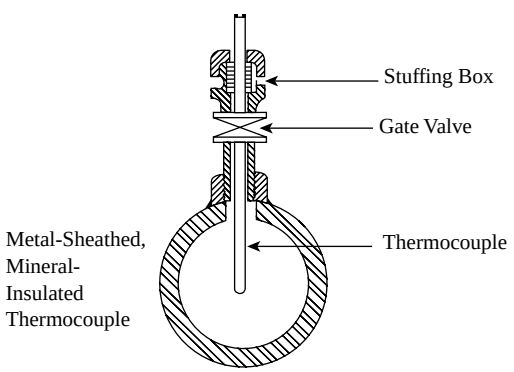

FIG. 4.13s
Installation of thermocouple without thermowells.[2]

into a tube or tank well. Their low cost makes it feasible to place them in concrete beams while curing or to use them in other single-time operations.

When it is desirable to maximize the speed of response of the measurement, but also necessary to periodically remove the sensor, the bare (sheathed) thermocouple can be removed through a stuffing box and gate valve combination (Figure 4.13s). Most TCs are installed in a protecting well. In Figure 4.13t the R dimension is the immersion length, while the U dimension is the insertion length of the well, R should be at least 10 times the diameter of the protective tube (sheath) diameter of the thermocouple. The sheath diameter of different TCs can range from 0.04 to 0.84 in. (1 to 21 mm), while the TCs can range from gauge #36 to #8. The well can

© 2003 by Béla Lipták

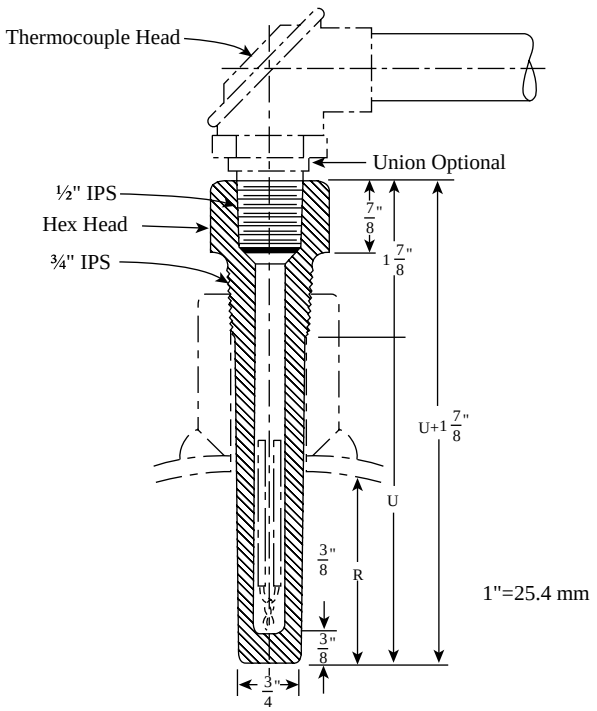

FIG. 4.13t
Screwed thermowell installation.[2]

be inserted perpendicularly into the pipeline if R is not much more than the inside radius of the pipe. Otherwise, it should be inserted at a 90-degree bend in the line.

The most often used well materials are 304 and 316 stainless steel, which are usable up to 1200°F (649°C). At higher temperatures ceramic thermowells are used because metallic ones start to "droop" (bend by gravity). High-purity alumina can be used up to 2200°F (1200°C); the same limit holds for mullite, but this material is not recommended for use with platinum thermocouples as it contains impurities which can contaminate platinum. The thermowell can have screwed connections (Figure 4.13t) or, if frequent inspection is required or if the well is glass-coated, it can be flanged.

Surface Temperature Detectors

When the surface temperature of tubes is to be measured, the TC must be shielded from furnace radiation. The TC can be attached to the heater tube surface by being furnished with stainless steel welding pads (Figure 4.13u, lower part) or by the use of TC attachment blocks (Figure 4.13u, upper part). The multiple holes in these blocks allow for spare TC elements for quick replacement.

Specialized Detectors

Needle Sensors The response time of the needle type sensors illustrated in Figure 4.13v is about 0.25 s. They are made of hypodermic stainless steel in many lengths and diameters. They are available in blunt, center sharp, and hypodermic

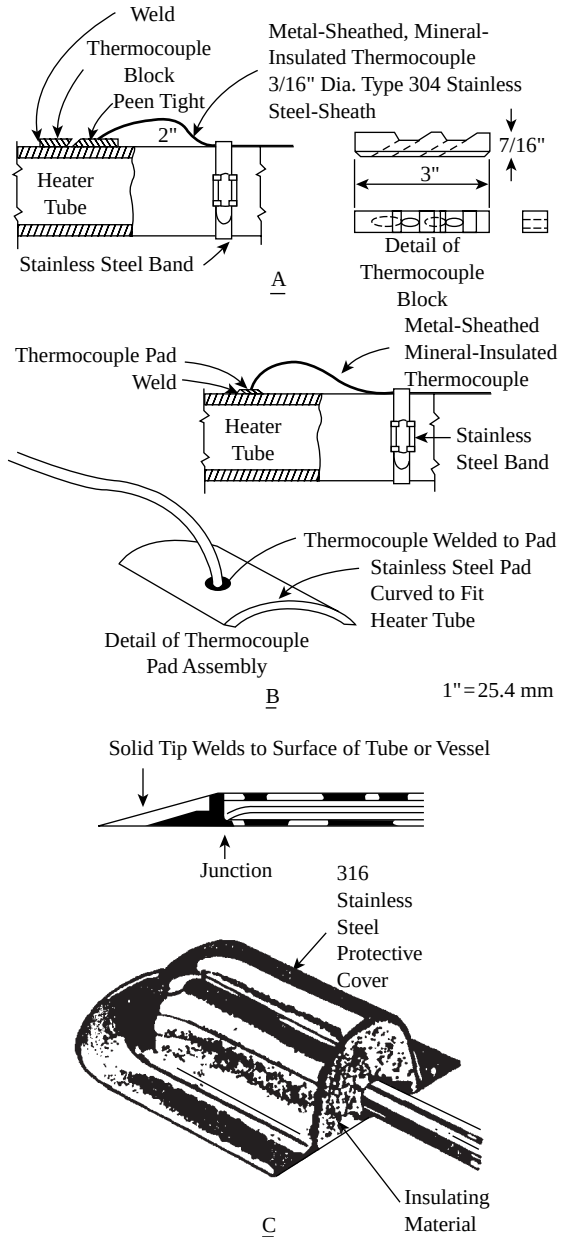

FIG. 4.13u
Tube surface temperature measured by thermocouple block (A) by welded on stainless steel pad,[2] *or by directly welding the thermocouple to the surface (B). A protective cover (C) gives the required mechanical protection.*



FIG. 4.13v
Needle sensors detect the temperature of such penetrable solids as rubber and plastic melts, but can also be used in liquids. (Courtesy of Electronic Development Labs, Inc.)

© 2003 by Béla Lipták

sharp designs and can be made from hard or soft stainless steel. The latter allows for shaping and bending the needle to match the needs of the application.

Suction Pyrometers The suction pyrometer consists of a sheathed TC (sheathed against chemical attack) located inside a radiation shield at the tip of a suction pipe (Figure 4.8d). The combustion gases are sucked through the shield and over the TC at high velocity by aspirating equipment. The efficiency of this aspirating TC is a function of the quality of the radiation shield and of the suction flow rate. If, for example, a suction pyrometer has a 100°C error without suction and a 10°C error when the suction flow is on, it is said to have an efficiency of 90%.

The suction pyrometer probe is usually made of stainless steel and is water-cooled. These probes are designed for high gas velocities of 500 f/s (152 m/s). At such velocities, the radiation shields usually produce better than 90% pyrometer efficiencies. The furnace gases can be pulled out by fans or by air or steam ejectors. The main limitations of this design include plugging of the probe when the combustion products are dusty (as in pulverized coal burners) and being unable to be used in applications where the temperatures exceed 2912°F (1600°C).

INSTALLATION AND PROTECTION

Multiple Thermocouples

The reason for inserting several TCs within the same thermowell can be to obtain a temperature profile over some distance. In this case, each TC junction is located at a different distance from the tip. In order for such sensors to detect the temperature outside the well (and not the air temperature inside it), it is essential that good physical contact be made between the TC junction and the metallic surface of the inside of the well.

Average Temperatures and Temperature Differences TCs can be connected in parallel to provide the average temperature in a system (Figure 4.13w). They can also be used to measure the difference between two temperatures (Figure 4.13x).

In the past, a single TC was often utilized by two separate measuring instruments (Figure 4.13y) because at balance, a potentiometer draws no current from the thermocouple circuit.

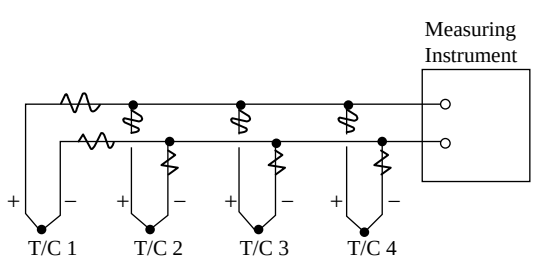

FIG. 4.13w
Average temperature measurement.

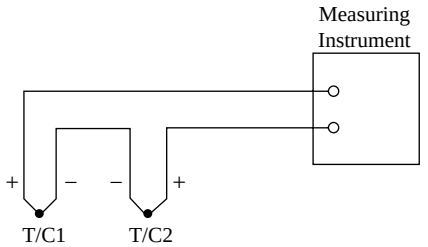

FIG. 4.13x
Temperature difference.

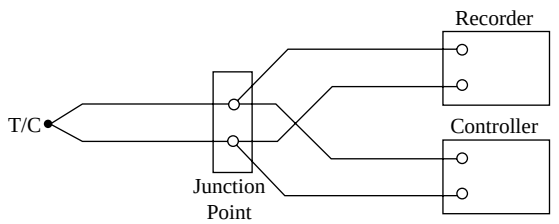

FIG. 4.13y
Parallel operation from common thermocouple.

In case of burnout, a small current circulates through the thermocouple. Today, this kind of configuration is less likely and it is much more common to have transmitters installed directly in the TC head.

Thermopiles Thermopiles are TCs connected in series with electrically insulated junctions (Figure 4.1p). Thermopiles generate large EMFs, reducing sensitivity requirements in the readout instrument. To obtain the mean temperature at several points being monitored by similar TCs in series, divide the total EMF by the number of sensing junctions and relate this EMF value to a corresponding temperature reading in the EMF-temperature table for the type of TC being used. As was discussed in Section 4.1, thermopiles can be used to amplify the output signals in differential temperature measurements and to serve as heat-flow detectors.

The principal objections to the use of thermopiles are the need for electrical isolation of individual TCs and the error that might go unnoticed when the output of one of the TCs is reduced by a short circuit. One satisfactory application for thermopiles is to use them as temperature differential detectors.

Thermocouple Burnout

When a TC detects the temperature in furnaces or superheaters (Figure 4.13z), the extension wire can pass through flames. On high-temperature services, TCs are provided with platinum, tantalum, or molybdenum sheath materials over the insulation, which can be magnesium or beryllium oxide. Hot spots like a burning coal seam can eventually burn through the sheath and the insulation of the extension wire. When the wires melt, a short develops. This is called TC burnout. Under these conditions the TC no longer indicates the temperature of the initial hot junction; instead, it measures the temperature

© 2003 by Béla Lipták

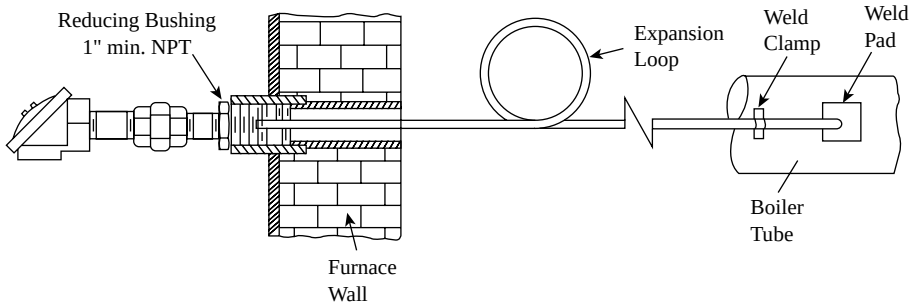

FIG. 4.13z
The expansion loop allows for thermal expansion in furnace applications.

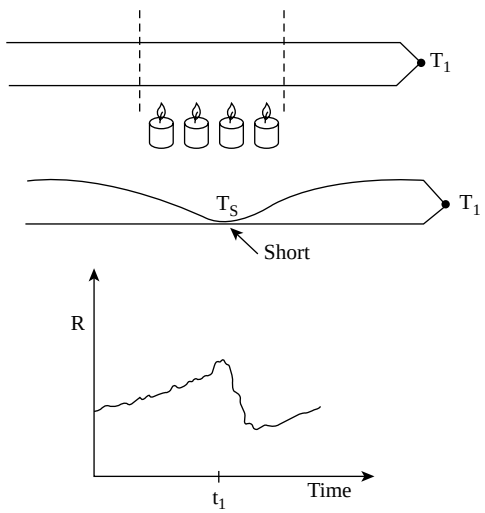

FIG. 4.13aa
Thermocouple burnout can be detected by measuring the resulting drop in thermocouple loop resistance.[1]

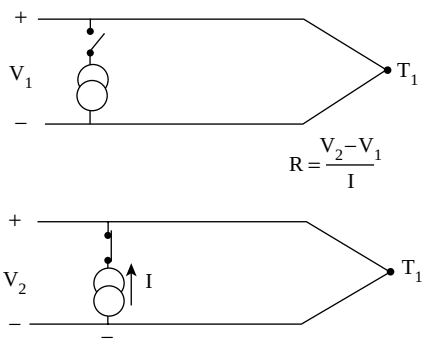

FIG. 4.13bb
Offset-compensated ohms measurement allows detection of the thermocouple loop resistance.

at the hot spot. One cannot detect TC burnout by reading the millivolt signal. However, if one measures the TC resistance (see Table 4.13n), that will signal a change as a result of burnout (Figure 4.13aa).

Under normal conditions, a running record of the thermocouple resistance will show gradual changes with temperature. When the thermal insulation is beginning to fail and a short is beginning to form, the TC resistance will rise first, and when the hot spot burns through and a short is formed, the TC resistance will drop abruptly. The method used to measure the TC resistance is called offset-compensated ohms measurement.

As shown on the top of Figure 4.13bb, normally the millivolts (V_1) are measured across the TC. Then, a current source is connected periodically and the millivolts (V_2) are measured again. The TC resistance is calculated by subtracting the thermocouple millivolts from the total and dividing it with the current flow in the loop: $R = (V_2 - V_1)/I$. By continuously recording this resistance, one can detect when an abrupt drop occurs, signaling TC burnout.

Protection Against Noise

The TC signal is very weak—a one degree change in temperature results in only a few millionths of a volt change in output. Because of this, precautions must be taken against errors due to stray currents resulting from the proximity of electrical wiring (common mode noise) or from capacitive secondary grounds (normal mode interference). Common mode noise (Figure 4.13cc) appears on both TC signal wires and therefore can be filtered out as 60 Hz (or 50 Hz) harmonic noise. The filter does reduce the interference dramatically, but it also causes the voltmeter to be sluggish when responding to a step change. It is also possible to eliminate the common mode interference by using twisted wire leads because each time the wire is twisted, the flux-induced current is inverted.

Another recommended form of protection against any type of common mode noise is guarding and shielding. If the shield surrounding the lead wires is connected to the guard surrounding the voltmeter, the interfering current caused by AC interference does not flow through the TC lead resistance but instead is shunted. Naturally, when TCs are scanned, the scanner guard must be switched to the shield of the TC being read to eliminate ground loops. Harmonics can also be removed by integrating the incoming signal over the power line cycle in

© 2003 by Béla Lipták

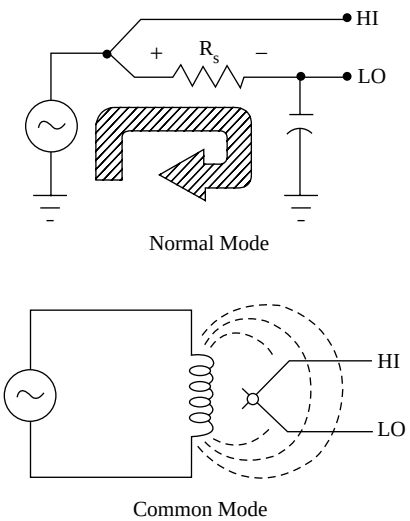

FIG. 4.13cc
Noise interference that enters only one of the lead wires (normal mode) is more difficult to remove than noise that acts on both leads (common mode).

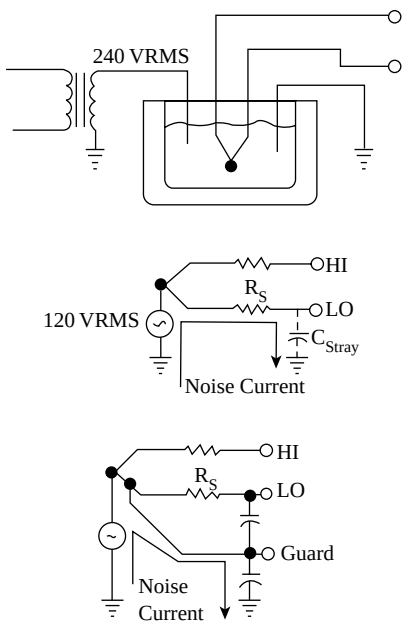

FIG. 4.13dd
The addition of a guard lead wire reduces the normal mode noise.[1]

an integrating analog-to-digital (A/D) converter or voltmeter. In short, common mode noise is relatively easy to remove.

Normal Mode Noise The same cannot be said about normal mode noise. An example of normal mode noise interference can occur in the measurement of the temperature in a molten metal bath, which is heated by electric current. In this case, the TC junction is in direct contact with a common mode noise source. In addition, the capacitive ground (C-stray) from the LO terminal of the TC to the chassis causes a current flow in the low lead and an associated normal mode noise voltage across the resistance R_S (Figure 4.13dd).

If a guard lead wire is installed connected directly to the TC, the current flowing in the LO lead through the resistance R_S is drastically reduced. Therefore, the worst form of interference is DC offset caused by a DC leakage current; whatever normal mode noise remains in the system, it cannot be distinguished from the measurement and, in case of weak signals, even a small amount of noise can represent a large amount of interference.

CALIBRATION, DIAGNOSTICS, AND TRANSMISSION

Calibration

Since all TCs are subject to drift, calibration checks are done regularly in laboratories and industrial plants. For calibrating TCs, depending upon the application, various procedures are used. Primary standard thermocouples of platinum vs. platinum plus 10% rhodium can be calibrated by the National Bureau of Standards to fixed points on the International Practical Temperature Scale. However, these TCs must be handled carefully to retain their accuracy. Most major manufacturers can supply TCs, which are against primary standard thermocouples that are kept in their own metrology laboratories. Secondary reference TCs for in-plant use are usually made of base metal. Comparison of these against the Primary Standard TC is accomplished by placing them in close contact in a checking furnace. Users normally check their ordinary TCs against these secondary standards.

Diagnostics

TC diagnostics can be improved by the use of tip-branched and leg-branched lead wires allowing redundant measurements, verification of system integrity, and other forms of diagnostics. These tools can be useful in detecting the failure of wire insulators, poor junction connections, wire degradation due to overheating, or decalibration due to diffusion of atmospheric particles into the metal. Added to the noise protection and degradation problems are the intermediate wire junctions, which if not at the same temperature (Figure 4.13e), also contribute errors.

Transmission

Because of the problems associated with long extension wires, including noise interference (guarding, shielding, using twisted pairs, and integration), the best alternative is not to send low-level TC signals over long distances at all, but to place the transmitter electronics directly on top of the thermowell (Figure 4.13ee).

In the past it was more economical to run the TC lead wires to the data acquisition systems, and this is still the case in the laboratory and on various test stands. On the other hand, the cost of integral transmitters in most industrial applications has become competitive with the cost of running the thermocouple lead wires to the control room. These integral transmitters are

© 2003 by Béla Lipták

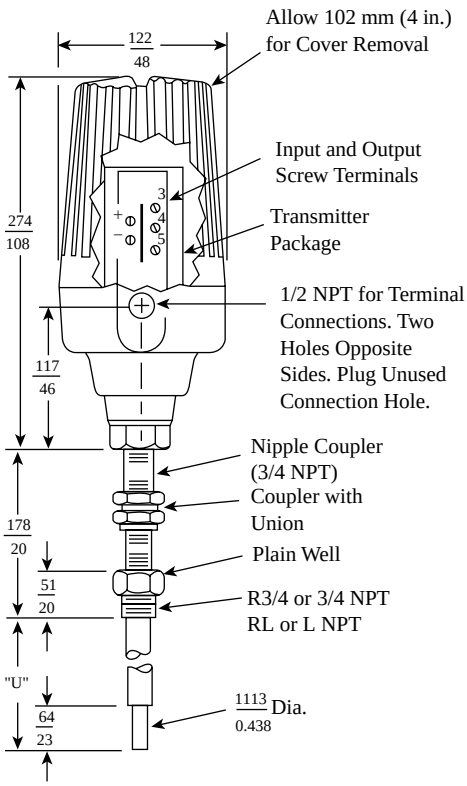

FIG. 4.13ee
Integral thermocouple transmitter mounted directly on top of the thermowell. (Courtesy of The Foxboro Co.)

also explosion-proof. Conventional transmitters are accurate to 0.15% of span, and intelligent units are accurate to 0.05% of span (Table 4.13m). It can be observed that while intelligent transmitters give better performance than the standard ones, they too are limited to a minimum absolute error plus cold junction error, which equals about 1°F (0.6°C).

Intelligent Transmitters During the last decade, microprocessor based temperature transmitters have continued to evolve in sophistication and capability. They usually include an input circuit referred to as an A/D converter that converts the sensor input signal from its analog form into a digital representation. The microprocessor performs the ranging, linearization, error checking, and conversion. The resulting digital value is then converted back, usually to a 4–20 mA DC analog signal. For some special applications, 0–1 V DC or 0–10 V DC or digital signals using either an open or proprietary protocol are also used.

Today, universal transmitters that accept inputs from any TC, RTD, or other resistance and mV source are commonly available. They make transmitters interchangeable and thereby reduce inventories. They check their own calibration on every measurement cycle, minimize drift over a wide ambient temperature range, incorporate self-diagnostics features, and can be configured by the use of simple push buttons or personal computer software. Their reconfiguration process is quick and convenient.

In addition to improved performance, the intelligent transmitters are capable of working with any one of eight types of TCs or two types of RTD elements. This increases their flexibility and reduces the need for spare parts. The intelligent transmitters are also provided with continuous self-diagnostics and with automatic three-point self-calibration, which is performed every 5 s and does not interrupt the analog or digital output of the unit.

The intelligent transmitter can also be furnished with dual thermal elements that can be used to measure temperature differentials, averages, and high/low sensors, or as redundant backup elements. Another convenient feature of smart transmitters is their remote reconfiguration capability, which can change their zero, span, or many other features without requiring rewiring.

ADVANTAGES AND LIMITATIONS

The weakest link in virtually all measurements is the temperature sensor. For most industrial applications the thermocouple (TC) has been popular, because it is relatively inexpensive, can be produced in a variety of sizes, can be of ruggedized construction and covers a wide temperature range. Thermocouples are also small, convenient, and versatile (can be welded to a pipe), cover wide ranges, are reasonably stable, reproducible, accurate, and fast. The EMF they generate is independent of wire length and diameter. While RTDs are more accurate and more stable and while thermistors are more sensitive, thermocouples are the most economical and the best to detect the highest temperatures.

The main disadvantage of the TC is its weak output signal. This makes it sensitive to electrical noise and limits its use to relatively wide spans (usually the minimum transmitter span is 1.0 mV). It is nonlinear, and the conversion of the EMF generated into temperature is not as simple as in direct reading devices. TCs always require amplifiers, and the calibration of the TC can change due to contamination or composition changes due to internal oxidation, cold-working or temperature gradients. Another limitation is that bare TCs cannot be used in conductive fluids, and if their wires are not homogeneous, this can cause errors.

In general, one should use the largest size TC wire possible, and avoid stress and vibration. Use of integral transmitters is also recommended whenever possible (and otherwise use twisted and shielded wires with the shield connected to the guard of the integrating A/D converter). In addition, one should avoid steep temperature gradients, and be careful in selecting the sheath and thermowell materials.

THERMOCOUPLE TABLES

Tables 4.13ff, 4.13gg, 4.13hh, 4.13ii, 4.13jj, and 4.13kk provide temperature vs. millivolts data for types J, K, R, S, T, and E thermocouples. All thermocouple tables in this handbook are

© 2003 by Béla Lipták

TABLE 4.13ff

Type J—Iron-Constantan Thermocouple

(Degrees Fahrenheit vs. Millivolts. Temperatures are based on the International Temperature Scale of 1948. EMF is expressed in absolute millivolts. Reference Junction 32°F (0°C).)

°F*	–300	–200	–100	–0	+0	100	200	300	400	500	600	700	800	900	1000	1100	1200	1300	1400	1500
										MILLIVOLTS										
0	–7.52	–5.76	–3.49	–0.89	–0.89	1.94	4.91	7.94	11.03	14.12	17.18	20.26	23.32	26.40	29.52	32.72	36.01	39.43	42.96	46.53
5	–7.59	–5.86	–3.61	–1.02	–0.75	2.09	5.06	8.10	11.18	14.27	17.34	20.41	23.47	26.55	29.68	32.89	36.18	39.61	43.14	46.17
10	–7.66	–5.96	–3.73	–1.16	–0.61	2.23	5.21	8.25	11.34	14.42	17.49	20.56	23.63	26.70	29.84	33.05	36.35	39.78	43.32	46.89
15	–7.73	–6.06	–3.85	–1.29	–0.48	2.38	5.36	8.40	11.49	14.58	17.64	20.72	23.86	26.78	30.00	33.21	36.52	39.96	43.50	47.07
20	–7.79	–6.16	–3.97	–1.43	–0.34	2.52	5.51	8.56	11.65	14.73	17.80	20.87	23.93	27.02	30.16	33.37	36.69	40.13	43.68	47.24
25		–6.25	–4.09	–1.56	–0.20	2.67	5.66	8.71	11.80	14.88	17.95	21.02	24.09	27.17	30.32	33.54	36.86	40.31	43.85	47.42
30		–6.35	–4.21	–1.70	–0.06	2.82	5.81	8.87	11.96	15.04	18.11	21.18	24.24	27.33	30.48	33.70	37.02	40.48	44.03	47.60
35		–6.44	–4.33	–1.83	+0.08	2.97	5.96	9.02	12.11	15.19	18.26	21.33	24.39	27.48	30.64	33.86	37.20	40.66	44.21	47.78
40		–6.53	–4.44	–1.96	+0.22	3.11	6.11	9.17	12.26	15.34	18.41	21.48	24.55	27.64	30.80	34.03	37.36	40.83	44.39	47.95
45		–6.62	–4.56	–2.09	+0.36	3.26	6.27	9.33	12.42	15.50	18.57	21.64	24.70	27.80	30.96	34.19	37.54	41.01	44.57	48.13
50		–6.71	–4.68	–2.22	0.50	3.41	6.42	9.48	12.57	15.65	18.72	21.79	24.85	27.95	31.12	34.36	37.71	41.19	44.75	48.31
55		–6.80	–4.79	–2.35	0.65	3.56	6.57	9.64	12.73	15.80	18.87	21.94	25.01	28.11	31.28	34.52	37.88	41.36	44.93	48.48
60		–6.89	–4.90	–2.48	0.79	3.71	6.72	9.79	12.88	15.96	19.03	22.10	25.16	28.26	31.44	34.68	38.05	41.54	45.10	48.66
65		–6.97	–5.01	–2.61	0.93	3.86	6.87	9.95	13.04	16.11	19.18	22.25	25.32	28.42	31.60	34.60	38.22	41.72	45.28	48.83
70		–7.06	–5.12	–2.74	1.07	4.01	7.03	10.10	13.19	16.26	19.34	22.40	25.47	28.58	31.76	35.01	38.39	41.90	45.46	49.01
75		–7.14	–5.23	–2.86	1.22	4.16	7.18	10.25	13.34	16.42	19.49	22.55	25.62	28.74	31.92	35.18	38.57	42.07	45.64	49.18
80		–7.22	–5.34	–2.99	1.36	4.31	7.33	10.41	13.50	16.57	19.64	22.71	25.78	28.89	32.08	35.35	38.74	42.25	45.82	49.36
85		–7.30	–5.44	–3.12	1.51	4.46	7.48	10.56	13.65	16.72	19.80	22.86	25.93	29.05	32.24	35.51	38.91	42.43	46.00	49.53
90		–7.38	–5.55	–3.24	1.65	4.61	7.64	10.72	13.81	16.88	19.95	23.01	26.09	29.21	32.40	35.68	39.08	42.61	46.18	49.70
95		–7.45	–5.65	–3.36	1.80	4.76	7.79	10.87	13.96	17.03	20.10	23.17	26.24	29.37	32.56	35.84	39.26	42.78	46.35	49.88
100		–7.52	–5.76	–3.49	1.94	4.91	7.94	11.03	14.12	17.18	20.26	23.32	26.40	29.52	32.72	36.01	39.43	42.96	46.53	50.05

$$*°C = \frac{°F - 32}{1.8}$$

Note: Instruments calibrated to this curve have scales identified as "type J" thermocouple.

© 2003 by Béla Lipták

TABLE 4.13gg

Type K—Chromel-Alumel Thermocouple

(Degrees Fahrenheit vs. Millivolts. Temperatures are based on the International Temperature Scale of 1948. EMF is expressed in absolute millivolts. Reference Junction 32°F (0°C).)

°F*	0	100	200	300	400	500	600	700	800	900	1000	1100	1200	1300	1400	1500	1600	1700	1800	1900	2000	2100	2200	2300
												MILLIVOLTS												
0	–0.68	1.52	3.82	6.09	8.31	10.57	12.86	15.18	17.53	19.89	22.26	24.63	26.98	29.32	31.65	33.93	36.19	38.43	40.62	42.78	44.91	47.00	49.05	51.05
5	–0.58	1.63	3.94	6.20	8.42	10.68	12.97	15.30	17.64	20.01	22.37	24.74	27.10	29.44	31.76	34.05	36.31	38.54	40.73	42.89	45.01	47.10	49.15	51.15
10	–0.47	1.74	4.05	6.31	8.54	10.79	13.09	15.41	17.76	20.13	22.49	24.86	27.22	29.56	31.88	34.16	36.42	38.65	40.84	42.99	45.12	47.21	49.25	51.25
15	–0.37	1.86	4.17	6.42	8.65	10.91	13.20	15.53	17.88	20.24	22.61	24.98	27.34	29.67	31.99	34.28	36.53	38.76	40.95	43.10	45.22	47.31	49.35	51.35
20	–0.26	1.97	4.28	6.53	8.76	11.02	13.32	15.65	18.00	20.36	22.73	25.10	27.45	29.79	32.11	34.39	36.64	38.87	41.05	43.21	45.33	47.41	49.45	51.45
25	–0.15	2.09	4.40	6.65	8.87	11.13	13.44	15.76	18.11	20.48	22.85	25.22	27.57	29.91	32.22	34.50	36.76	38.98	41.16	43.31	45.43	47.52	49.55	51.54
30	–0.04	2.20	4.51	6.76	8.98	11.25	13.55	15.88	18.23	20.60	22.97	25.34	27.69	30.02	32.34	34.62	36.87	39.09	41.27	43.42	45.54	47.62	49.65	51.64
35	+0.07	2.32	4.63	6.87	9.09	11.36	13.67	16.00	18.35	20.72	23.08	25.46	27.80	30.14	32.45	34.73	36.98	39.20	41.38	43.53	45.64	47.72	49.76	51.74
40	+0.18	2.43	4.74	6.98	9.21	11.48	13.78	16.12	18.47	20.84	23.20	25.57	27.92	30.25	32.57	34.84	37.09	39.31	41.49	43.63	45.75	47.82	49.86	51.84
45	+0.29	2.55	4.86	7.09	9.32	11.59	13.90	16.23	18.58	20.95	23.32	25.69	28.04	30.37	32.68	34.96	37.20	39.42	41.60	43.74	45.85	47.93	49.96	51.94
50	0.40	2.66	4.97	7.20	9.43	11.71	14.02	16.35	18.70	21.07	23.44	25.81	28.15	30.49	32.80	35.07	37.31	39.53	41.70	43.85	45.96	48.03	50.06	52.03
55	0.51	2.78	5.08	7.31	9.54	11.82	14.13	16.47	18.82	21.19	23.56	25.93	28.27	30.60	32.91	35.18	37.43	39.64	41.81	43.95	46.06	48.13	50.16	52.13
60	0.62	2.89	5.20	7.42	9.66	11.94	14.25	16.59	18.94	21.31	23.68	26.05	28.39	30.72	33.02	35.29	37.54	39.75	41.92	44.06	46.17	48.23	50.26	52.23
65	0.73	3.01	5.31	7.53	9.77	12.05	14.36	16.70	19.06	21.43	23.80	26.16	28.50	30.83	33.14	35.41	37.65	39.86	42.03	44.17	46.27	48.34	50.36	52.33
70	0.84	3.12	5.42	7.64	9.88	12.17	14.48	16.82	19.18	21.54	23.91	26.28	28.62	30.95	33.25	35.52	37.76	39.96	42.14	44.27	46.38	48.44	50.46	52.42
75	0.95	3.24	5.53	7.75	10.00	12.28	14.60	16.94	19.29	21.66	24.03	26.40	28.74	31.07	33.37	35.63	37.87	40.07	42.24	44.38	46.48	48.54	50.56	52.52
80	1.06	3.36	5.65	7.87	10.11	12.40	14.71	17.06	19.41	21.78	24.15	26.52	28.86	31.18	33.48	35.75	37.98	40.18	42.35	44.49	46.58	48.64	50.65	52.62
85	1.18	3.47	5.76	7.98	10.22	12.51	14.83	17.17	19.53	21.90	24.27	26.63	28.97	31.30	33.59	35.86	38.09	40.29	42.46	44.59	46.69	48.74	50.75	52.72
90	1.29	3.59	5.87	8.09	10.34	12.63	14.95	17.29	19.65	22.02	24.39	26.75	29.09	31.42	33.71	35.97	38.20	40.40	42.57	44.70	46.79	48.85	50.85	52.81
95	1.40	3.70	5.98	8.20	10.45	12.74	15.06	17.41	19.77	22.14	24.51	26.87	29.21	31.53	33.82	36.08	38.32	40.51	42.67	44.80	46.90	48.95	50.95	52.91
100	1.52	3.82	6.09	8.31	10.57	12.86	15.18	17.53	19.89	22.26	24.63	26.98	29.32	31.65	33.93	36.19	38.43	40.62	42.78	44.91	47.00	49.05	51.05	53.01

$$*°C = \frac{°F - 32}{1.8}$$

© 2003 by Béla Lipták

TABLE 4.13hh

Type R—Platinum vs. Platinum Plus 13% Rhodium Thermocouple

Degrees Fahrenheit vs. Millivolts. Temperatures are based on the International Temperature Scale of 1948. EMF is expressed in absolute millivolts. Reference Junction 32°F (0°C).

°F*	0	100	200	300	400	500	600	700	800	900	1000	1100	1200	1300	1400	1500
								MILLIVOLTS								
0	–0.089	0.220	0.596	1.030	1.504	2.012	2.547	3.103	3.677	4.264	4.868	5.488	6.125	6.773	7.436	8.116
5	–0.076	0.237	0.616	1.052	1.529	2.038	2.575	3.132	3.706	4.294	4.899	5.519	6.156	6.805	7.470	8.150
10	–0.062	0.255	0.637	1.075	1.553	2.065	2.602	3.160	3.735	4.324	4.930	5.551	6.188	6.838	7.503	8.184
15	–0.049	0.272	0.657	1.098	1.578	2.091	2.630	3.188	3.764	4.354	4.960	5.582	6.220	6.871	7.537	8.218
20	–0.035	0.291	0.678	1.121	1.603	2.117	2.657	3.217	3.794	4.384	4.991	5.614	6.252	6.904	7.571	8.253
25	–0.021	0.308	0.700	1.144	1.628	2.144	2.685	3.245	3.823	4.413	5.022	5.645	6.285	6.937	7.605	8.287
30	–0.006	0.327	0.721	1.167	1.653	2.170	2.712	3.273	3.852	4.443	5.053	5.677	6.317	6.970	7.639	8.322
35	+0.009	0.345	0.742	1.191	1.678	2.197	2.740	3.302	3.882	4.473	5.084	5.709	6.349	7.003	7.672	8.356
40	+0.024	0.363	0.763	1.214	1.703	2.223	2.768	3.330	3.911	4.503	5.115	5.741	6.381	7.037	7.706	8.391
45	+0.039	0.381	0.785	1.238	1.729	2.250	2.796	3.359	3.941	4.533	5.146	5.773	6.414	7.069	7.740	8.426
50	0.055	0.400	0.807	1.261	1.754	2.277	2.823	3.387	3.970	4.563	5.176	5.805	6.446	7.103	7.774	8.460
55	0.071	0.419	0.828	1.285	1.779	2.303	2.851	3.416	3.999	4.593	5.208	5.837	6.479	7.136	7.808	8.495
60	0.086	0.438	0.850	1.309	1.805	2.330	2.879	3.445	4.029	4.624	5.238	5.869	6.511	7.169	7.842	8.530
65	0.103	0.457	0.872	1.333	1.831	2.357	2.907	3.473	4.058	4.654	5.270	5.901	6.544	7.202	7.877	8.565
70	0.119	0.476	0.894	1.357	1.856	2.384	2.935	3.502	4.087	4.685	5.301	5.933	6.577	7.235	7.911	8.599
75	0.135	0.496	0.917	1.381	1.882	2.412	2.963	3.531	4.116	4.715	5.332	5.964	6.609	7.269	7.945	8.634
80	0.152	0.516	0.939	1.406	1.908	2.438	2.991	3.560	4.146	4.746	5.363	5.996	6.642	7.302	7.979	8.669
85	0.169	0.536	0.962	1.430	1.934	2.466	3.019	3.589	4.175	4.776	5.394	6.028	6.674	7.336	8.013	8.704
90	0.186	0.556	0.984	1.455	1.960	2.493	3.047	3.618	4.205	4.807	5.426	6.060	6.707	7.369	8.047	8.739
95	0.203	0.576	1.007	1.480	1.986	2.520	3.075	3.647	4.235	4.837	5.457	6.092	6.740	7.403	8.081	8.774
100	0.220	0.596	1.030	1.504	2.012	2.547	3.103	3.677	4.264	4.868	5.488	6.125	6.773	7.436	8.116	8.809

°F*	1600	1700	1800	1900	2000	2100	2200	2300	2400	2500	2600	2700	2800	2900	3000
								MILLIVOLTS							
0	8.809	9.516	10.237	10.973	11.726	12.488	13.255	14.027	14.798	15.568	16.340	17.110	17.875	18.636	19.394
5	8.844	9.552	10.274	11.011	11.765	12.526	13.293	14.065	14.837	15.607	16.378	17.148	17.913	18.674	19.432
10	8.879	9.587	10.310	11.048	11.802	12.564	13.332	14.104	14.875	15.645	16.417	17.186	17.951	18.712	19.470
15	8.914	9.623	10.347	11.085	11.840	12.602	13.371	14.142	14.914	15.684	16.455	17.225	17.989	18.750	19.508
20	8.949	9.659	10.383	11.122	11.878	12.641	13.409	14.181	14.952	15.722	16.494	17.263	18.027	18.788	19.545
25	8.984	9.694	10.420	11.160	11.916	12.679	13.448	14.219	14.991	15.761	16.532	17.301	18.065	18.826	19.583
30	9.019	9.730	10.456	11.197	11.954	12.718	13.486	14.258	15.029	15.800	16.571	17.340	18.103	18.864	19.583
35	9.054	9.766	10.493	11.235	11.992	12.756	13.525	14.296	15.068	15.838	16.610	17.378	18.141	18.902	19.659
40	9.090	9.802	10.529	11.273	12.029	12.795	13.564	14.335	15.107	15.877	16.648	17.416	18.179	18.940	19.697
45	9.125	9.838	10.566	11.310	12.068	12.833	13.602	14.374	15.145	15.915	16.687	17.455	18.218	18.978	19.735
50	9.161	9.874	10.603	11.348	12.105	12.871	13.641	14.412	15.184	15.954	16.725	17.493	18.255	19.016	19.773
55	9.196	9.910	10.639	11.385	12.144	12.909	13.679	14.451	15.222	15.992	16.764	17.532	18.294	19.054	19.811
60	9.232	9.946	10.676	11.424	12.182	12.948	13.718	14.490	15.261	16.031	16.802	17.569	18.332	19.092	19.848
65	9.267	9.982	10.712	11.461	12.220	12.986	13.756	14.528	15.299	16.070	16.842	17.608	18.370	19.129	19.886
70	9.303	10.019	10.749	11.499	12.258	13.025	13.795	14.567	15.338	16.108	16.880	17.646	18.408	19.168	19.924
75	9.338	10.056	10.786	11.537	12.296	13.063	13.833	14.606	15.377	16.147	16.918	17.685	18.446	19.205	19.962
80	9.374	10.092	10.823	11.575	12.335	13.102	13.872	14.644	15.415	16.185	16.957	17.723	18.484	19.243	19.999
85	9.409	10.129	10.861	11.613	12.373	13.140	13.911	14.683	15.454	16.224	16.995	17.761	18.522	19.281	20.037
90	9.445	10.164	10.898	11.651	12.411	13.178	13.949	14.721	15.492	16.263	17.033	17.799	18.560	19.318	20.075
95	9.481	10.201	10.936	11.689	12.450	13.216	13.988	14.760	15.531	16.301	17.072	17.837	18.598	19.356	20.112
100	9.516	10.237	10.973	11.726	12.488	13.255	14.027	14.798	15.568	16.340	17.110	17.875	18.636	19.394	20.150

$$*°C = \frac{°F - 32}{1.8}$$

© 2003 by Béla Lipták

TABLE 4.13ii

Type S—Platinum vs. Platinum Plus 10% Rhodium Thermocouple

(Degrees Fahrenheit vs. Millivolts. Temperatures are based on the International Temperature Scale of 1948. EMF is expressed in absolute millivolts. Reference Junction 32°F (0°C).)

°F*	0	100	200	300	400	500	600	700	800	900	1000	1100	1200	1300	1400	1500
								MILLIVOLTS								
0	–0.092	0.221	0.595	1.017	1.474	1.956	2.458	2.977	3.506	4.046	4.596	5.156	5.726	6.307	6.897	7.498
5	–0.078	0.238	0.615	1.039	1.498	1.981	2.484	3.003	3.533	4.073	4.623	5.184	5.755	6.336	6.927	7.529
10	–0.064	0.256	0.635	1.061	1.521	2.005	2.510	3.029	3.560	4.100	4.651	5.212	5.784	6.635	6.957	7.559
15	–0.050	0.274	0.655	1.083	1.545	2.030	2.535	3.056	3.587	4.128	4.679	5.241	5.813	6.394	6.987	7.589
20	–0.035	0.291	0.676	1.106	1.569	2.055	2.561	3.082	3.614	4.155	4.707	5.269	5.842	6.424	7.017	7.620
25	–0.021	0.309	0.696	1.128	1.593	2.080	2.587	3.108	3.640	4.182	4.735	5.298	5.871	6.453	7.046	7.650
30	–0.006	0.327	0.717	1.151	1.616	2.105	2.613	3.135	3.667	4.210	4.763	5.326	5.899	6.483	7.076	7.681
35	+0.009	0.346	0.738	1.173	1.640	2.130	2.638	3.161	3.694	4.237	4.790	5.354	5.928	6.512	7.106	7.711
40	+0.024	0.364	0.758	1.196	1.664	2.155	2.664	3.188	3.721	4.264	4.818	5.383	5.957	6.542	7.136	7.742
45	+0.040	0.383	0.779	1.219	1.688	2.180	2.690	3.214	3.748	4.292	4.846	5.411	5.986	6.571	7.166	7.772
50	0.056	0.401	0.800	1.242	1.712	2.205	2.716	3.240	3.775	4.319	4.874	5.440	6.015	6.601	7.196	7.803
55	0.071	0.420	0.822	1.264	1.736	2.230	2.742	3.267	3.802	4.347	4.902	5.469	6.044	6.630	7.226	7.834
60	0.087	0.439	0.843	1.287	1.761	2.255	2.768	3.293	3.829	4.374	4.930	5.497	6.073	6.660	7.257	7.864
65	0.104	0.458	0.864	1.311	1.785	2.281	2.794	3.320	3.856	4.402	4.959	5.526	6.102	6.689	7.287	7.895
70	0.120	0.477	0.886	1.334	1.809	2.306	2.820	3.347	3.883	4.430	4.987	5.555	6.131	6.719	7.317	7.925
75	0.136	0.496	0.907	1.357	1.833	2.331	2.846	3.373	3.910	4.457	5.015	5.583	6.161	6.749	7.347	7.956
80	0.153	0.516	0.929	1.380	1.858	2.357	2.872	3.400	3.937	4.485	5.043	5.612	6.190	6.778	7.377	7.987
85	0.170	0.535	0.951	1.404	1.882	2.382	2.898	3.426	3.964	4.512	5.071	5.640	6.219	6.808	7.407	8.018
90	0.187	0.555	0.973	1.427	1.907	2.407	2.924	3.453	3.991	4.540	5.099	5.669	6.248	6.838	7.438	8.048
95	0.204	0.575	0.994	1.450	1.931	2.433	2.951	3.480	4.019	4.568	5.128	5.698	6.277	6.867	7.468	8.079
100	0.221	0.595	1.017	1.474	1.956	2.458	2.977	3.506	4.046	4.596	5.156	5.726	6.307	6.897	7.498	8.110

© 2003 by Béla Lipták

0	8.110	8.732	9.365	10.009	10.662	11.323	11.989	12.657	13.325	13.991	14.656	15.319	15.979	16.637	17.292	17.943	18.590
5	8.141	8.764	9.397	10.041	10.695	11.356	12.022	12.690	13.358	14.024	14.689	15.352	16.012	16.670	17.324	17.975	18.622
10	8.172	8.795	9.429	10.074	10.728	11.389	12.055	12.724	13.391	14.058	14.722	15.385	16.045	16.702	17.357	18.008	18.655
15	8.203	8.827	9.461	10.106	10.761	11.423	12.089	12.757	13.425	14.091	14.755	15.418	16.078	16.735	17.389	18.040	18.687
20	8.234	8.858	9.493	10.139	10.794	11.456	12.122	12.790	13.458	14.124	14.789	15.451	16.111	16.768	17.422	18.073	
25	8.265	8.890	9.525	10.171	10.827	11.489	12.155	12.824	13.491	14.157	14.822	15.484	16.144	16.801	17.455	18.105	
30	8.296	8.921	9.557	10.204	10.860	11.522	12.189	12.857	13.525	14.191	14.855	15.517	16.177	16.834	17.487	18.137	
35	8.327	8.953	9.589	10.237	10.893	11.556	12.222	12.891	13.558	14.224	14.888	15.550	16.210	16.866	17.520	18.170	
40	8.358	8.984	9.621	10.269	10.926	11.589	12.256	12.924	13.591	14.257	14.921	15.583	16.243	16.899	17.552	18.202	
45	8.389	9.016	9.654	10.302	10.959	11.622	12.289	12.957	13.625	14.290	14.954	15.616	16.275	16.932	17.585	18.235	
50	8.420	9.048	9.686	10.334	10.992	11.655	12.322	12.991	13.658	14.324	14.988	15.649	16.308	16.965	17.618	18.267	
55	8.451	9.079	9.718	10.367	11.025	11.689	12.356	13.024	13.691	14.357	15.021	15.682	16.341	16.997	17.650	18.299	
60	8.482	9.111	9.750	10.400	11.058	11.722	12.389	13.058	13.725	14.390	15.054	15.715	16.374	17.030	17.683	18.332	
65	8.513	9.143	9.782	10.433	11.091	11.755	12.423	13.091	13.758	14.423	15.087	15.748	16.407	17.063	17.715	18.364	
70	8.545	9.174	9.815	10.465	11.124	11.789	12.456	13.124	13.791	14.457	15.120	15.781	16.440	17.095	17.748	18.396	
75	8.576	9.206	9.847	10.498	11.157	11.822	12.490	13.158	13.825	14.490	15.153	15.814	16.473	17.128	17.780	18.429	
80	8.607	9.238	9.879	10.531	11.190	11.855	12.523	13.191	13.858	14.523	15.186	15.847	16.506	17.161	17.813	18.461	
85	8.638	9.270	9.912	10.564	11.224	11.888	12.556	13.224	13.891	14.556	15.219	15.880	16.538	17.194	17.845	18.493	
90	8.670	9.302	9.944	10.597	11.257	11.922	12.590	13.258	13.924	14.589	15.253	15.913	16.571	17.226	17.878	18.526	
95	8.701	9.333	9.976	10.629	11.290	11.955	12.623	13.291	13.958	14.623	15.286	15.946	16.604	17.259	17.910	18.558	
100	8.732	9.365	10.009	10.662	11.323	11.989	12.657	13.325	13.991	14.656	15.319	15.979	16.637	17.292	17.943	18.590	

$$*^{\circ}C = \frac{^{\circ}F - 32}{1.8}$$

© 2003 by Béla Lipták

TABLE 4.13jj

Type T—Copper-Constantan Thermocouple

Degrees Fahrenheit vs. Millivolts. Temperatures are based on the International Temperature Scale of 1948. EMF is expressed in absolute millivolts. Reference Junction 32°F (0°C).

*°F**	*–300*	*–200*	*–100*	*–0*	*+0*	*100*	*200*	*300*	*400*	*500*	*600*	*700*
					MILLIVOLTS							
0	–5.284	–4.111	–2.559	–0.670	–0.670	1.517	3.967	6.647	9.525	12.575	15.773	19.100
5	–5.332	–4.179	–2.645	–0.771	–0.567	1.633	4.096	6.786	9.674	12.732	15.937	19.269
10	–5.379	–4.246	–2.730	–0.872	–0.463	1.751	4.225	6.926	9.823	12.888	16.101	19.439
15		–4.312	–2.814	–0.973	–0.359	1.869	4.355	7.066	9.973	13.046	16.264	19.608
20		–4.377	–2.897	–1.072	–0.254	1.987	4.486	7.208	10.123	13.203	16.429	19.779
25		–4.441	–2.980	–1.171	–0.149	2.107	4.617	7.349	10.273	13.362	16.593	19.949
30		–4.504	–3.062	–1.270	–0.042	2.226	4.749	7.491	10.423	13.520	16.758	20.120
35		–4.566	–3.143	–1.367	+0.064	2.346	4.880	7.633	10.574	13.678	16.924	20.291
40		–4.627	–3.223	–1.463	+0.171	2.467	5.014	7.776	10.726	13.838	17.089	20.463
45		–4.688	–3.301	–1.559	+0.280	2.589	5.147	7.920	10.878	13.997	17.255	20.634
50		–4.747	–3.380	–1.654	0.389	2.711	5.280	8.064	11.030	14.157	17.421	20.805
55		–4.805	–3.457	–1.748	0.499	2.835	5.415	8.207	11.183	14.317	17.588	
60		–4.863	–3.533	–1.842	0.609	2.958	5.550	8.352	11.336	14.477	17.754	
65		–4.919	–3.609	–1.934	0.720	3.082	5.685	8.497	11.490	14.637	17.921	
70		–4.974	–3.684	–2.026	0.832	3.207	5.821	8.642	11.643	14.799	18.089	
75		–5.029	–3.757	–2.117	0.944	3.332	5.957	8.788	11.797	14.961	18.257	
80		–5.081	–3.829	–2.207	1.057	3.458	6.094	8.935	11.953	15.122	18.425	
85		–5.134	–3.901	–2.296	1.171	3.584	6.232	9.082	12.108	15.284	18.593	
90		–5.185	–3.972	–2.385	1.286	3.712	6.370	9.229	12.263	15.447	18.761	
95		–5.235	–4.042	–2.472	1.401	3.839	6.508	9.376	12.418	15.610	18.930	
100		–5.284	–4.111	–2.559	1.517	3.967	6.647	9.525	12.575	15.773	19.100	

$$*°C = \frac{°F - 32}{1.8}$$

based upon a reference junction temperature of 32°F (0°C); therefore, direct conversion from the tables can be made only when an ice bath is used at the reference junction.

If it is not possible to maintain the reference junction temperature at 32°F (0°C), a correction factor must be applied to the millivolt values shown in the TC tables. Note that the millivoltage produced by a given thermocouple is decreased when the temperature difference between the measuring junction and the reference junction is decreased. Correcting for reference junction temperatures other than 32°F (0°C) is described below.

Converting Millivoltage to Temperature

To apply the reference junction correction factor to a given potentiometer millivoltage reading, proceed as follows:

1. From the appropriate TC table, obtain the millivoltage (based upon a 32°F R/J) corresponding to the actual temperature of the thermocouple reference junction.
2. Add the value obtained in step 1 to the millivoltage read on the potentiometer.
3. The corrected millivoltage may then be converted into terms of temperature directly from the same table.

Example 1 A potentiometer indicates a 13.019 mV when connected to a type T thermocouple, and it is desired to convert this value to its equivalent temperature. The actual TC reference junction temperature, as determined by an accurate mercury-in-glass thermometer, is 68°F (20°C). Interpolating* from the type T Table, 68°F = 0.787 mV, based upon

* To interpolate between two printed values, add to the smaller value a proportionate part of the difference between the two printed values:
Example 1a (positive temperature)

$$248°F = 245° + \frac{3}{5}(250° - 245°).$$

In terms of millivoltage from the type T table,

$$248°F = 5.147 + \frac{3}{5}(5.280 - 5.147)$$
$$= 5.147 + 0.0798 = 5.227 \text{ mV}$$

Example 1b (negative temperature)

$$-248°F = -245° + \frac{3}{5}(-250° - (-245\ °))$$

In terms of millivoltage from the type T table,

$$-248°F = -4.688 + \frac{3}{5}(-4.747 - (4.668))$$
$$= -4.688 + \frac{3}{5}(-4.747 + 4.688)$$
$$= -4.688 - 0.0354 = -4.723 \text{ mV}$$

© 2003 by Béla Lipták

a 32°F reference junction. Adding this value to the potentiometer reading, 13.019 + 0.787 = 13.806 mV, which is the corrected millivoltage based upon a 32°F reference junction. Interpolating from type T table, 13.806 mV = 539°F (282°C).

Example 2 A type T thermocouple under steady operating conditions causes a potentiometer reading of –3.357 mv. The actual TC reference junction temperature is 70°F (21°C). From the type T table, 70°F = 0.832 mV based upon a reference junction of 32ºF. Adding these two millivoltages algebraically, –3.357 + 0.832 = –2.525 mV. Interpolating,* –2.525 mV = –98°F (–72°C).

Converting Temperature to Millivoltage

To determine the proper millivolt input required to check the calibration of an instrument, proceed as follows:

1. From the appropriate table, obtain the millivoltage based upon a 32°F reference junction corresponding to the actual temperature at the input terminals of the instrument to be checked.
2. From the same table, obtain the millivoltage based upon a 32°F reference junction for the temperature to be checked.
3. Subtract the value obtained in step 1 from the value obtained in step 2.

Example 1 It is desired to check the calibration of an instrument at 300°F (149°C). The instrument has a scale graduated in degrees Fahrenheit for a type T thermocouple. The actual temperature at the input terminals of the instrument to be checked, as determined by an accurate mercury-in-glass thermometer, is 70°F (21°C). From the type T table, 70°F = 0.832 mV and 300°F = 6.647 mV based upon a reference junction temperature of 32°F. Substracting these values, the corrected millivoltage input required on the basis of a 70°F reference junction is 6.647 – 0.832 = 5.815 mV.

Example 2 It is desired to determine the correct millivoltage input required to check the calibration of an instrument at –200°F (–129°C). The instrument scale is graduated in

TABLE 4.13kk

Type E—Chromel-Constantan Thermocouple

*°F**	*–300*	*–200*	*–100*	*–0*	*+0*	*100*	*200*	*300*	*400*	*500*	*600*	*700*
						MILLIVOLTS						
0	–8.30	–6.40	–3.94	–1.02	–1.02	2.27	5.87	9.71	13.75	17.95	22.25	26.65
10	–8.45	–6.62	–4.21	–1.33	–0.71	2.62	6.25	10.11	14.17	18.38	22.69	27.09
20	–8.60	–6.83	–4.47	–1.64	–0.39	2.97	6.62	10.51	14.59	18.81	23.13	27.53
30		–7.04	–4.73	–1.94	–0.07	3.32	7.00	10.91	15.00	19.23	23.57	27.97
40		–7.24	–4.98	–2.24	0.26	3.68	7.38	11.31	15.42	19.66	24.00	28.42
50		–7.44	–5.23	–2.54	0.59	4.04	7.76	11.71	15.84	20.09	24.44	28.86
60		–7.62	–5.48	–2.83	0.92	4.40	8.15	12.11	16.26	20.52	24.88	29.31
70		–7.80	–5.72	–3.11	1.26	4.77	8.54	12.52	16.68	20.95	25.32	29.75
80		–7.97	–5.95	–3.39	1.59	5.13	8.93	12.93	17.10	21.39	25.76	30.19
90		–8.14	–6.18	–3.67	1.93	5.50	9.32	13.34	17.52	21.82	26.20	30.64
100		–8.30	–6.40	–3.94	2.27	5.87	9.71	13.75	17.95	22.25	26.65	31.09
*°F**	*800*	*900*	*1000*	*1100*	*1200*	*1300*	*1400*	*1500*	*1600*	*1700*	*1800*	
						MILLIVOLTS						
0	31.09	35.57	40.06	44.56	49.04	53.50	57.92	62.30	66.63	70.90	75.12	
10	31.54	36.02	40.51	40.01	49.49	53.94	58.36	62.74	67.05	71.32	75.53	
20	31.98	36.47	40.96	45.46	49.93	54.38	58.80	63.17	67.48	71.75	75.95	
30	32.43	36.92	41.41	45.91	50.37	54.83	59.24	63.60	67.91	72.17	76.37	
40	32.87	37.37	41.86	46.36	50.82	55.27	59.68	64.04	68.34	72.60		
50	33.32	37.82	42.31	46.81	51.27	55.71	60.11	64.47	68.76	73.02		
60	33.77	38.26	42.76	47.26	51.72	56.15	60.55	64.90	69.19	73.44		
70	34.22	38.71	43.21	47.71	52.16	56.59	60.99	65.34	69.62	73.86		
80	34.67	39.16	43.66	48.15	52.61	57.03	61.43	65.77	70.05	74.28		
90	35.12	39.61	44.11	48.60	53.05	57.48	61.86	66.20	70.47	74.70		
100	35.57	40.06	44.56	49.04	53.50	57.92	62.30	66.63	70.90	75.12		

$$**°C = \frac{°F - 32}{1.8}$$

© 2003 by Béla Lipták

degrees Fahrenheit for a type T thermocouple. The actual temperature at the input terminals of the instrument is 68°F (20°C). From the type T table, 68°F = 0.787 and –200°F = –4.111 mV based upon a 32°F reference junction. Subtracting these values, the corrected millivolt input on the basis of a 68°F reference junction is –4.111 – 0.787 = –4.898 mV.

References

1. Hewlett-Packard Application Note 290, "Practical Temperature Measurement," Palto Alto, CA.
2. American Petroleum Institute, Manual API 550, "Installation of Refinery Instruments and Control Systems," 1965.

Bibliography

Adler, C.B., "Reliability Aspects of Temperature Measurement," Instrumentation, Systems, and Automation Society Conference, Chicago, 2001.

American National Standards Institute, "American National Standard for Temperature Measurement Thermocouples," ANSI MC 96.7, Washington, D.C., 1975.

American Society for Testing and Materials, "Manual on the Use of Thermocouples in Temperature Measurement," Special Publication 470A, West Conshohocken, PA,1974.

Anderson, R.L., "Accuracy of Small Diameter Sheathed Thermocouples for the Core Flow Test Loop," Oak Ridge National Laboratories, ORNL-5401, April 1979.

Ball, K., "Thermocouples and RTD'S," *InTech*, August 1986.

Bartosiak, G., "Guide to Thermocouples," *Instruments & Control Systems*, November 1978, pp. 53–55

Bediones, D. and Wang, T.P., "Criteria for the Selection of Thermocouples Versus RTD's in Industrial Applications," Paper #91–0300, Instrumentation, Systems, and Automation Society Conference, Toronto, 1991.

Behrmann, W,C., "Thermocouple Errors Due To Sheath Conduction," *InTech*, August 1990.

Bluestein, I. "Understanding Contact Temperature Sensors," Sensors, October 2001.

Carlson, D.R., "Temperature Measurement in Process Control." *InTech*, October 1990.

Carlson, D.R., "Transmitting a Remote Temperature," *Control*, April 1989.

Coffee, M.B., "Common-Mode Rejection Techniques for Low-Level Data Acquisition," *Instrumentation Technology*, July 1977, pp. 45–49.

Daneman, H.L., "MIMS Thermocouple Stability," *Measurements and Control*, February 1991.

Daneman, H.L., "Thermocouple Accuracy," *Measurements and Control*, April 1993.

Desmarais, R. and Breuer, J., "How to Select and Use the Right Temperature Sensor," *Sensors*, January 2001.

Fraden, J., *Handbook of Modern Sensors*, 2nd ed., Heidelberg: Springer-Verlag, 1997.

Hage, J., "Smart Temperature Transmitter Accents Accuracy," *Control*, September 1999.

Hashemian, H.M. and Petersen, K.M., "In-Situ Tests Gauge Thermocouple Performance," *InTech*, January 1993.

Hashemian, H.M. and Petersen, K.M., "Smart Thermocouple and RTD Systems for Industrial Applications," Instrumentation, Systems, and Automation Society Conference, Houston, October 1992.

Johnson, R., "Measuring the Hot, Difficult and Inaccessible," *Control Engineering*, June 2001.

Kaufman, A.B., "Temperature Calibration," *Measurements and Control*, February 1986.

Klipec, B., How to Avoid Noise Pickup on Wire and Cable," *Instruments & Control Systems*, December 1977, pp. 27–30.

Kreider, K., "Thermocouple research at NIST," Paper #91–0301, Instrumentation, Systems, and Automation Society Conference, Toronto, 1991.

Leewis, W., "The International Temperature Scale of 1990," Paper #91–0302, Instrumentation, Systems, and Automation Society Conference, Toronto, 1991.

Magison, E., "Temperature Measurement," *InTech*, October 25, 2001.

Michalski, L. et al., *Temperature Measurement*, 2nd ed., London: John Wiley & Sons, 2001.

Moffat, R.J., "The Gradient Approach to Thermocouple Circuitry," in *Temperature: Its Measurement and Control in Science and Industry*, New York: Van Nostrand Reinhold, 1962.

Paine, A., "Which Thermocouple is Best?" *Measurements & Control*, September 1992.

Park, R.M., "Applying the Systems Concept to Thermocouples," *Instrumentation Technology*, August 1973. pp 25–31.

Pederson, R., "Choosing Thermocouples or Resistance Thermocouples," *Instruments & Control Systems*, June 1975.p. 39.

Peterson.W., "Choosing the Right Temperature Transmitter," *InTech*, April 1991.

Pompei, F. and Pompei, D., "Infrared Thermocouples: Temperature without Touching," *InTech*, January, 1993.

Prentice, G.R., "Seven Reasons Why Temperature Transmitters are Better Than Direct Wiring," *Process Heating*, June 1999

Stockham, R., "Temperature Transmitters Take the Lead Over Direct Wiring," *Control and Instrumentation*, Product Survey Directory, 1999.

"Thermocouples," *Measurements and Control*, June 1991.

Volbrecht, A. and Gordon, W., "Temperature Measurement: Making Sense of it All," *Sensors*, June 1998.

Wang.T.P., "Thermocouple Selection and Maintenance," *InTech*, April 1991.

Warmoth, D., "Temperature Measurements and Control," *Measurements and Control*, February 1986.

Wither, P., "Thermocouple Calibration," *Measurements and Control*, September 1990.

© 2003 by Béla Lipták

4.14 Thermowells

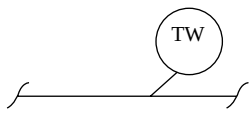

Flow Sheet Symbol

H. L. DANEMAN (1995) **B. G. LIPTÁK** (2003)

Applications:	Providing mechanical and corrosion protection for thermal elements and for sighting of radiation pyrometers
Temperature Range:	From cryogenic up to 3500°F (1950°C)
Materials of Construction:	Carbon steel, 304 or 316 stainless steel, Carpenter 20, Hastelloy B or C, Inconel, Monel, nickel, titanium, glass-lined, or ceramics (alumina or mullite). See Table 4.14g for a detailed listing of recommended materials for a variety of applications.
Costs:	Steel, 304 or 316 stainless steel well with 0.5 in. (13 mm) NPT threaded connection and 2.5 in. (64 mm) insertion length costs $25 to $35, while with 10.5 in. (268 mm) insertion length the cost is about $75. Flanged units cost about twice as much. Relative to stainless steel, the cost multipliers of other well materials are as follows: 1.1 for Monel; 2.0 for Inconel, Carpenter 20, nickel, titanium, and ceramics; and 3.0 for Hastelloy B and C.
Partial List of Suppliers:	ABB Inc.-Instrumentation (www.abb.com/us/instrumentation) Barber Colman Industrial Instruments (www.barber-colman.com) Brooklyn Thermometer Co. (www.brooklynthermometer.com) Buffalo Gauge (www.buffalogauge.com) Chino Works America Inc. (www.chinoamerica.com) Conax Buffalo Corp. (www.conaxbuffalo.com) Dresser Instrument (www.dresserinstruments.com) Foxboro-Invensys (www.foxboro.com) H-B Instrumentation (www.hbinstrument.com) Honeywell Industry Solutions (www.iac.honeywell.com) Johnson Controls (www.johnsoncontrols.com) Jumo Process Control (www.jumousa.com) Marsh Bellofram (www.marshbellofram.com) Moeller Instrument Co. (www.moellerinstrument.com) Omega Engineering (www.omega.com) Palmer Instruments (www.palmerinstruments.com) Princo Instruments (www.princoinstruments.com) Sandelius Instruments (www.sandelius.com) Siemens Energy & Automation (www.sea.siemens.com) Tel-Tru Manufacturing Co. (www.teltru.com) Temtex (www.temtex.com) Thermo Electric (www.thermo-electric-direct.com) Trend Instruments (www.trendinst.com) H.O. Trerice (www.hotrerice.com) United Electric (www.ueonline.com) Weiss Instruments (www.weissinstruments.com) Weksler Instruments (www.dresserinstruments.com) WIKA Instrument (www.wika.com)

The purpose of thermowells is to protect the thermal elements from mechanical damage and corrosion or to act as sighting tubes for radiation thermometers. Some of these protective sockets have already been discussed in other sections of this volume. These references include Figure 4.2d in connection with bimetallic thermometers; Figure 4.6e in connection with

© 2003 by Béla Lipták

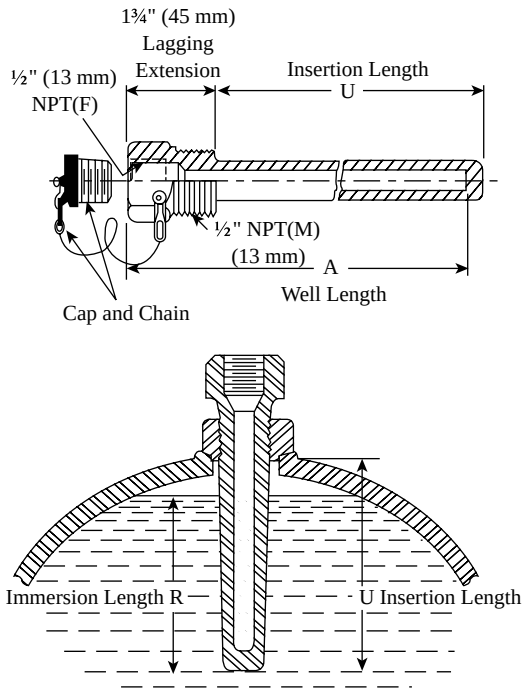

FIG. 4.14a
The test well and its installation.

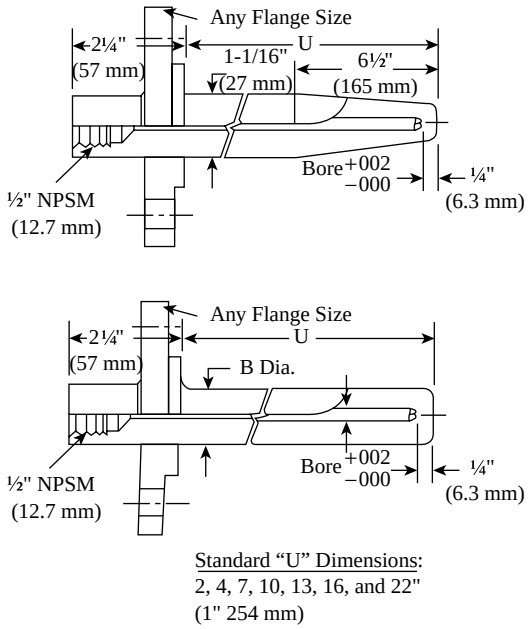

FIG. 4.14b
Flanged thermowells with tapered and straight shanks. (Courtesy of Trend Instruments Inc.)

filled bulb thermometers; Figure 4.9i in connection with pyrometer sighting tubes, Figure 4.10k in connection with resistance temperature detector protection; and Figures 4.13q, 4.13t, and 4.13ee in connection with thermocouple wells. The discussion here will build on (but not repeat) what was already said in connection with the noted figures.

INTRODUCTION

Thermowells permit the removal of thermal elements for calibration, replacement, or repairs and also allow the use of portable sensors. The well or protection tube is permanently inserted into the pipe or vessel and is secured by threads, flanges, or welds, allowing the thermal element to be inserted into the well without causing any stress (Figure 4.14a).

THERMOWELL TYPES

Thermowells are usually metallic and may be coated with other materials to provide additional corrosion protection. Integral flanges or threaded sections enable the wells to be secured to the pipe or vessel (Figure 4.14b). Internal threads secure nipples which extend the head beyond any insulation. It is important to avoid contamination of temperature sensors by oil (such as cutting oils) left on the inner surface of drilled wells or accumulations of foreign materials within wells.

Protection Tubes

Protection tubes can also be ceramic when used to protect noble metal thermocouples (TCs) or as sighting tubes for radiation pyrometers. While not as strong as metallic thermowells, they do not droop and can withstand higher temperatures; in addition, they are free of contamination which can cause thermocouple drift due to vapor deposition of elements at higher temperatures. Mullite and high-purity alumina are commonly used as ceramic thermowell materials. In addition to being corrosion-resistant, mullite can operate up to 3200°F (1750°C) and alumina up to 3540°F (1950°C). When platinum TCs are used at temperatures exceeding 2200°F (1200°C), mullite should not be used, because it contains impurities that can contaminate platinum. For such applications, high-purity alumina is the proper choice.

Dual protection tubes may be used where the outer tube provides mechanical protection and the inner tube provides corrosion or permeation protection. See Figure 4.14c for an example of protective layers used on a high-temperature TC.

The sheaths are either extruded or woven and are used to protect TCs or other wires. Woven sheaths are similar to those used for electrical insulation and may be made of stainless steel, Inconel, tinned copper, fiberglass, or ceramics. They can withstand temperatures up to 2200°F (1204°C) continuously or 2800°F (1538°C) for short periods of time.

Sheaths

Extruded sheaths can be plastic or metallic. The metallic sheaths are commonly used for mineral-insulated thermocouples in which the wire elements are surrounded by

© 2003 by Béla Lipták

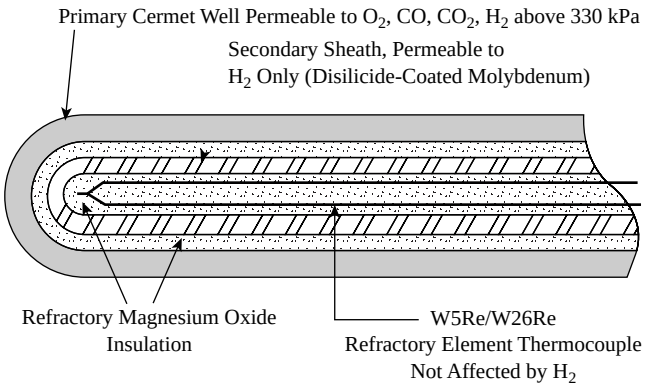

FIG. 4.14c
Multiple layers of protection used on a high-temperature thermocouple.

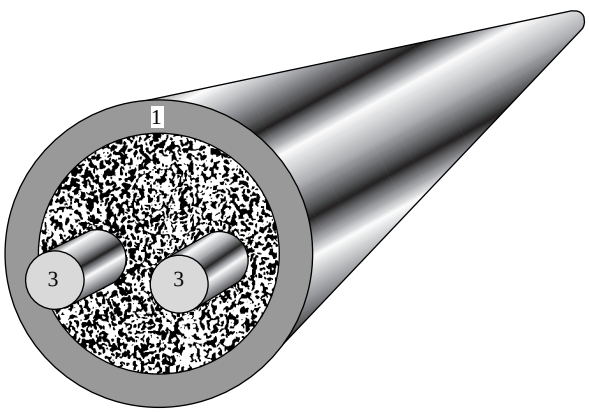

FIG. 4.14d
Thermocouple wires surrounded by magnesium oxide or other mineral insulation and protected by an integral metal sheath of stainless steel or Inconel.

ceramic oxides such as magnesium oxide (Figure 4.14d). After being packed with powdered oxides, the sheaths are swaged or rolled under pressure to reduce their diameter and tightly pack the powdered insulation. While this process serves to reduce intrusion of atmosphere within the sheath, it does not protect against humidity or moisture. Moisture intrusion is rapid and deteriorates insulation resistance to the point of thermocouple failure. Procedures for insulation resistance testing are to be found in the American Society for Testing and Materials documentation. Such testing is vital for mineral-insulated, metal-sheathed TCs stored in the open at construction sites or in repair shops for periods of time. Sheathing can also cause vapor transfer at elevated temperatures, which can result in thermocouple drift. This is the case with stainless steel sheaths used for nickel-bearing TCs such as types K and N. The offending element is manganese, and the problem can be eliminated by specifying low-manganese Inconel or modified Nicrosil sheathing.

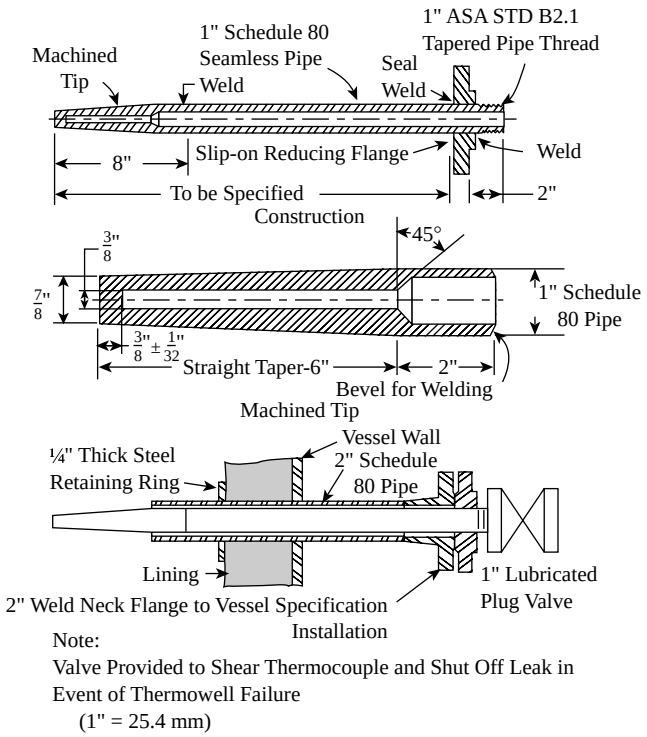

FIG. 4.14e
Flanged thermowell designs used on erosive services.[1]

THERMOWELL INSTALLATION

Well installation should be planned so that the wells are readily accessible for servicing and the thermal elements can be withdrawn without obstruction by adjacent structures. It is desirable to install spare wells for calibration purposes so the working sensor can be compared to a standard temperature sensor.

Vertical installation is preferred for very high temperature use to prevent sagging. Horizontal installation, on the other hand, avoids some contamination by foreign materials (Figure 4.14e). In horizontal installations, consideration should be given to the possibility that construction or repair personnel might misuse the wells as steps.

Immersion Depth

The thermowell immersion depth (U) should be sufficient to eliminate conduction error. A general rule is to use an insertion length equaling a minimum of 10 times the diameter of the protection tube or well. Another rule of thumb is to have the sensitive portion of the sensor immersed to a depth of a minimum of 3 in. (75 mm) plus the length of the sensitive portion. In the case of expansion bulbs, the immersion depth may be specified by the supplier or can be indicated on a calibration report, if furnished.

For pipe installations, such as steam or hot water lines, insertion in an elbow on the axis of the pipe can permit an appropriate immersion depth should the diameter of the pipe be inadequate (Figure 4.14f).

© 2003 by Béla Lipták

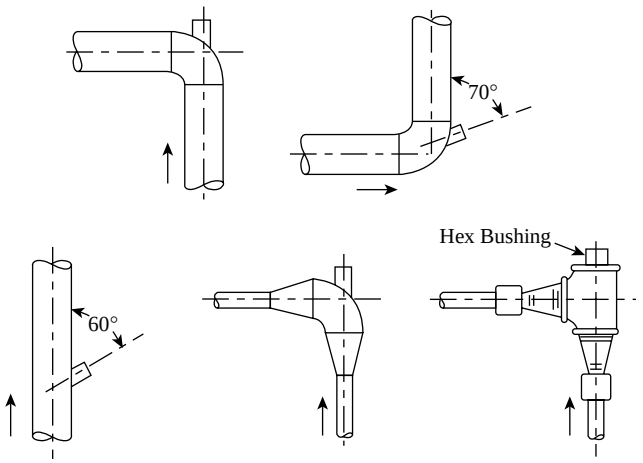

FIG. 4.14f
Alternate ways of installing thermowells in pipes that are 3 in. (75 mm) or smaller in diameter.[1]

When installing thermowells at an angle or in elbows, it is hard to maintain sanitary conditions, which is an important consideration in the food and pharmaceutical industries. Thermowells inserted into small pipes can also cause excessive flow restrictions, pressure drops, or even plugging.

Thermowell Time Constants

The time constant of a thermal element increases with its mass. If time constants of a couple of seconds or less are required, unprotected, small diameter, and bare thermal elements must be used. The addition of even a thin-walled sheath or thermowell increases the time constant to about 5 s as a minimum, and with larger bulbs it can reach 30 s. It is also important to maintain positive contact between the thermal element and the well in order to make sure that the temperature being measured reflects the temperature of the process on the outside and not the air temperature on the inside of the well.

If the process gases include hydrogen and a filled thermal element is used, it might be a good idea to vent the well, since hydrogen can damage the filling material.

In Table 4.14g, well material recommendations are given for a variety of services.

TABLE 4.14g
Selection Guide for Thermowell Materials[2]

Application	*Thermowell Material*
Heat Treating	
Annealing	
Up to 704°C (1300°F)	Black steel
Over 704°C (1300°F)	Inconel 600,[a] Type 446 SS
Carburizing hardening	
Up to 816°C (1500°F)	Black steel, Type 446 SS
1093°C (1500 to 2000°F)	Inconel 600, Type 446 SS
Over 1093°C (2000°F)	Ceramic[b]
Nitriding salt baths	Type 446 SS
Cyanide	Nickel (CP)
Neutral	Type 446 SS
High speed	Ceramic[b]
Iron and Steel	
Basic oxygen furnace	Quartz
Blast furnaces	
Downcomer	Inconel 600, Type 446 SS
Stove dome	Silicon carbide
Hot blast main	Inconel 600
Stove trunk	Inconel 600
Stove outlet flue	Black steel
Open hearth	
Flues and stack	Inconel 600, Type 446 SS
Checkers	Inconel 600, Cermets
Waste heat boiler	Inconel 600, Type 446 SS
Iron and Steel cont.	
Billet heating slab heating and butt welding	
Up to 1093°C (2000°F)	Inconel 600, Type 446 SS
Over 1093°C (2000°F)	Silicon ceramic carbide
Bright annealing batch	
Top work temperature	Not required (use bare type J thermocouple)
Bottom work temperature	Type 446 SS
Continuous furnace section	Inconel 600, ceramic[b]
Forging	Silicon carbide, ceramic[b]
Soaking pits	
Up to 1093°C (2000°F)	Inconel 600,
Over 1093°C (2000°F)	Silicon ceramic carbide[b]
Nonferrous Metals	
Aluminum	
Melting	Cast iron (white-washed)
Heat treating	Black steel
Brass or bronze	Not required (use dip-type thermocouple)
Lead	Type 446 SS, black steel
Magnesium	Black steel, cast iron
Tin	Extra heavy carbon steel
Zinc	Extra heavy carbon steel
Pickling tanks	Chemical lead

© 2003 by Béla Lipták

TABLE 4.14g (Continued)
Selection Guide for Thermowell Materials[2]

Application	Thermowell Material
Cement	
Exit flues	Inconel 600, Type 446 SS
Kilns, heating zone	Inconel 600
Ceramic	
Kilns	Ceramic[b] and silicon carbide[c]
Dryers	Silicon carbide, black steel
Vitreous enameling	Inconel 600, Type 446 SS
Glass	
Fore hearths and feeders	Platinum thimble
Lehrs	Black steel
Tanks	
Roof and wall	Ceramic[a]
Flues and checkers	Inconel 600, Type 446 SS
Paper	
Digesters	Type 316 SS, Type 446 SS
Petroleum	
Dewaxing	Types 304, 310, 316, 321, 347 SS, carbon steel
Towers	Types 304, 310, 316, 321, 347 SS, carbon steel
Transfer lines	Types 304, 310, 316, 321, 347 SS, carbon steel
Factioning column	Types 304, 310, 316, 321, 347 SS, carbon steel
Bridgewall	Types 304, 310, 316, 321, 347 SS, carbon steel
Power	
Coal-air mixtures	304 SS
Flue gases	Black steel, Type 446 SS
Preheaters	Black steel, Type 446 SS
Steel lines	Types 347 or 316 SS
Water lines	Low carbon steels
Boiler tubes	Type 304, 309, or 310 SS
Gas Producers	
Producer gas	Type 446 SS
Water gas	
Carburetor	Inconel 600, Type 446 SS
Superheater	Inconel 600, Type 446 SS
Tar stills	Low carbon steels
Incinerators	
Up to 1093°C (2000°F)	Inconel 600, Type 446 SS
Over 1093°C (2000°F)	Ceramic (primary), silicon carbide (secondary)[a]
Food	
Baking ovens	Black steel
Charretort, sugar	Black steel
Vegetables and fruit	Type 304 SS
Chemical	
Acetic acid	
10 to 50% 21°C (70°F)	Type 304, Hastelloy C,[d] Monel
50% 100°C (212°F)	Type 316, Hastelloy C,[d] Monel
99% 21 to 100°C (70 to 212°F)	Type 430, Hastelloy C,[d] Monel
Alcohol, ethyl, methyl	
21 to 100°C (70 to 212°F)	Type 304
Ammonia	
All concentrations 21°C (70°F)	Types 304, 316 SS
Ammonium chloride	
All concentrations 100°C (212°F)	Types 316 SS, Monel
Ammonium nitrate	
All concentrations 21 to 100°C (70 to 212°F)	Type 316 SS
Ammonium sulphate, 10% to saturated 100°C (212°C)	Type 316 SS
Barium chloride, all concentrations 21°C (70°F)	Monel, Hastelloy C
Barium hydroxide, all concentrations, 21°C (70°F)	Low carbon steels
Barium sulphite	Nichrome,[a] Hastelloy C
Brines	Monel
Bromine	Tantalum, Monel
Butadiene	Type 304 SS
Butane	Type 304 SS
Butyl acetate	Monel
Butyl alcohol	copper, Type 304 SS
Calcium chlorate, dilute, 21 to 66°C (70 to 150°F)	
Calcium hydroxide	
10 to 20% 100°C (212°F)	Type 304 SS
50% 100°C (212°F)	Type 304 SS, Hastelloy C
	Type 316 SS, Hastelloy C
Carbolic acid, all, 100°C (212°F)	Type 316 SS
Carbon dioxide, wet or dry	2017-T4 aluminum, Monel, nickel
Chlorine gas	
Dry, 21°C (70°F)	Type 316 SS, Monel
Moist, 7 to 100°C (20 to 212°F)	Hastelloy C
Chromic acid, 10 to 50% 100°C (212°F)	Type 316 SS, Hastelloy C (all concentrations)
Citric acid	
15% 21°C (70°F)	Type 304, SS, Hastelloy C (all concentrations)

© 2003 by Béla Lipták

TABLE 4.14g (Continued)
Selection Guide for Thermowell Materials[2]

Application	*Thermowell Material*
Chemical cont.	
15% 100°C (212°F)	Type 316 SS, Hastelloy C (all concentrations)
Concentrated, 100°C (212°F)	Type 316 SS, Hastelloy C (all concentrations)
Copper nitrate	Types 304 SS, 316 SS
Copper sulphate	Types 304 SS, 316 SS
Cresols	Type 304 SS
Cyanogen gas	Type 304 SS
Dow therm[f]	Low carbon steels
Ether	Type 304 SS
Ethyl acetate	Monel, Type 304 SS
Ethyl chloride, 21°C (70°F)	Type 304 SS, low carbon steel
Ethyl sulphate, 21°C (70°F)	Monel
Ferric chloride, 5% 21°C (70°F) to boiling	Tantalum, Hastelloy C
Ferric sulphate, 5% 21°C (70°F)	Type 304 SS
Ferrous sulphate, dilute, 21°C (70°F)	Type 304 SS
Formaldehyde	Types 304 SS, 316 SS
Formic acid, 5% 21 to 66°C (70 to 150°F)	Type 316 SS
Freon	Monel
Gallic acid, 5% 21 to 66°C (70 to 150°F)	Monel
Gasoline, 21°C (70°F)	Type 304 SS, low carbon steel
Glucose, 21°C (70°F)	Type 304 SS
Glycerine, 21°C (70°F)	Type 304 SS
Glycerol	Type 304 SS
Hydrobromic acid, 98% 100°C (212°F)	Hastelloy B
Hydrochloric acid	
1%, 5% 21°C (70°F)	Hastelloy C
1%, 5% 100°C (212°F)	Hastelloy B
25% 21 to 100°C (70 to 212°F)	Hastelloy B
Hydrofluoric acid, 60% 100°C (212°F)	Hastelloy C, Monel
Hydrogen peroxide, 21 to 100°C (70 to 212°F)	Types 316 SS, 304 SS
Hydrogen sulphide, wet and dry	Type 316 SS
Iodine, 21°C (70°F)	Tantalum
Lactic acid	
5% 21°C (70°F)	Type 304 SS, 316 SS
5% 66°C (150°F)	Type 316 SS
10% 100°C (212°F)	Tantalum

Application	*Thermowell Material*
Chemical cont.	
Magnesium chloride	
5% 21°C (70°F)	Monel, nickel
5% 100°C (212°F)	Nickel
Magnesium sulphate, hot and cold	Monel
Muriatic acid, 21°C (70°F)	Tantalum
Naptha, 21°C (70°F)	Type 304 SS
Natural gas, 21°C (70°F)	Types 304 SS, 316 SS, 317 SS
Nickel chloride, 21°C (70°F)	Type 304 SS
Nickel sulphate, hot and cold	Type 304 SS
Nitric acid	
5% 21°C (70°F)	Types 304 SS, 316 SS
20% 21°C (70°F)	Types 304 SS, 316 SS
50% 100°C (70°F)	Types 304 SS, 316 SS
65% 100°C (212°F)	Type 316 SS
Concentrated, 21°C (70°F)	Types 304 SS, 316 SS
Concentrated, 100°C (212°F)	Tantalum
Nitrobenzene 21°C (70°F)	Type 304 SS
Oleic acid, 21°C (70°F)	Type 316 SS
Oleum, 21°C (70°F)	Type 316 SS
Oxalic acid	
5% hot and cold	Type 304 SS
10% 100°C (212°F)	Monel
Oxygen	
21°C (70°F)	Steel
Liquid	SS
Elevated temperatures	SS
Palmitic acid	Type 316 SS
Pentane	Type 340 SS
Phenol	Types 304 SS, 316 SS
Phosphoric acid	
1%, 5% 21°C (70°F)	Type 304 SS
10% 21°C (70°F)	Type 316 SS
10% 100°C (212°F)	Hastelloy C
30% 21 to 100°C (70 to 212°F)	Hastelloy B
85% 21 to 100°C (70 to 212°F)	Hastelloy B
Picric acid, 21°C (70°F)	Type 304 SS
Potassium bromide, 21°C (70°F)	Type 316 SS
Potassium carbonate, 1% 21°C (70°F)	Types 304 SS, 316 SS
Potassium chlorate, 21°C (70°F)	Type 304 SS
Potassium hydroxide	
5% 21°C (70°F)	Type 304 SS
25% 100°C (212°F)	Type 304 SS
60% 100°C (212°F)	Type 316 SS

© 2003 by Béla Lipták

TABLE 4.14g (Continued)
Selection Guide for Thermowell Materials[2]

Application	Thermowell Material
Chemical cont.	
Potassium nitrate	
5% 21°C (70°F)	Type 304 SS
5% 100°C (212°F)	Type 304 SS
Potassium permanganate, 5% 21°C (70°F)	Type 304 SS
Potassium sulphate, 5% 21°C (70°F)	Types 304 SS, 316 SS
Potassium sulphide, 21°C (70°F)	Types 304 SS, 316 SS
Propane	Type 304 SS, low carbon steel
Pyrogallic acid	Type 304 SS
Quinine bisulphate, dry	Type 316 SS
Quinine sulphate, dry	Type 304 SS
Seawater	Monel or Hastelloy C
Salicylic acid	Nickel
Sodium bicarbonate	
All concentrations, 21°C (70°F)	Type 304 SS
5% 66°C (150°F)	Types 304 SS, 316 SS
Sodium carbonate, 5% 21 to 66°C (70 to 150°F)	Types 304 SS, 316 SS
Sodium chloride	
5% 21 to 66°C (70 to 150°F)	Type 316 SS
Saturated, 21 to 100°C (70 to 212°F)	Type 316 SS, Monel
Sodium fluoride, 5% 21°C (70°F)	Monel
Sodium hydroxide	Types 304 SS, 316 SS, Hastelloy C
Sodium hypochlorite, 5% still	Type 316 SS, Hastelloy C
Sodium nitrate, fused	Type 316 SS
Sodium peroxide	Type 304 SS
Chemical cont.	
Sodium sulphate, 21°C (70°F)	Types 304 SS, 316 SS
Sodium sulphide, 21°C (70°F)	Type 316 SS
Sodium sulphite, 30% 66°C (150°F)	Type 304 SS
Sulphur dioxide	
Moist gas, 21°C (70°F)	Type 316 SS
Gas, 302°C (575°F)	Types 304 SS, 316 SS
Sulphur	
Dry molten	Type 304 SS
Wet	Type 316 SS
Sulphuric acid	
5% 21 to 100°C (70 to 212°F)	Hastelloy B, 316 SS
10% 21 to 100°C (70 to 212°F)	Hastelloy B
50% 21 to 100°C (70 to 212°F)	Hastelloy B
90% 21°C (70°F)	Hastelloy B
90% 100°C (212°F)	Hastelloy D
Tannic acid, 21°C (70°F)	Type 304 SS, Hastelloy B
Tartaric acid	
21°C (70°F)	Type 304 SS
66°C (150°F)	Type 316 SS
Toluene	2017-T4 aluminum, low carbon steel
Turpentine	Types 304 SS, 316 SS
Whiskey and wine	Type 304 SS, nickel
Xylene	Copper
Zinc chloride	Monel
Zinc sulphate	
5% 21°C (70°F)	Types 304 SS, 316 SS
Saturated, 21°C (70°F)	Types 304 SS, 316 SS
25% 100°C (212°F)	Types 304 SS, 316 SS

[a] Trademark of the International Nickel Co.
[b] Due to susceptibility to cracking, sudden thermal shocks should be avoided.
[c] Due to susceptibility to cracking, sudden thermal shocks should be avoided.
[d] Trademark of the Cabot Corp.
[e] Trademark of the Driver-Harris Co.
[f] Trademark of the Dow Chemical Corp.

References

1. American Petroleum Institute, Manual on Installation of Refinery Instruments, API RP 550, 1965.
2. American Society for Testing and Materials, Manual on the Use of Thermocouples in Temperature Measurement, STP 470B, West Conshocken, PA, 1981.

Bibliography

Adler, C.B., "Reliability Aspects of Temperature Measurement," Instrument Society of America Conference, 2001.

American Society of Mechanical Engineers Boiler and Pressure Vessel Code, Section VIII, New York, 1965.

American Society for Testing and Materials *Annual Book of ASTM Standards*, Part 44, West Conshocken, PA, 1980.

© 2003 by Béla Lipták

Bluestein, I., "Understanding Contact Temperature Sensors," *Sensors*, October 2001.
Gordon Co., *Temperature Measurement Handbook.*
JMS Southeast, Inc. JMS Southeast Co. Catalog, Statesville, NC.
Johnson, R., "*Measuring the Hot, Difficult and Inaccessible*," *Control Engineering*, June 2001.
Magison, E., "Temperature Measurement," *InTech*, October 25, 2001.
Masek, J.A., "Thermowell Design for Process Piping," *Hydrocarbon Processing*, February 1964.
Michalski, L. et al., *Temperature Measurement*, 2nd ed., London: John Wiley & Sons, 2001.
Nicholas, J.V. and White, D.R., *Traceable Temperature*, New York: John Wiley & Sons, 1982.
OMEGA Engineering Inc., *Complete Temperature Handbook and Encyclopedia*, Stamford, CT, 1989.
Thermo Electric Co., *Temperature Measurement Designers' Guide*, Rochelle Park, NJ.
Volbrecht, A. and Gordon, W., "Temperature Measurement: Making Sense of it All," *Sensors*, June 1998.

© 2003 by Béla Lipták

4.15 Ultrasonic and Sonic Thermometers

H. L. DANEMAN (1995) **B. G. LIPTÁK** (2003)

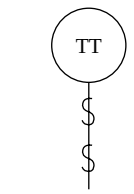

Flow Sheet Symbol

Applications:	Temperature measurement inside nuclear reactors, cement kilns, boilers, and in furnaces. Suited for harsh and abrasive environments.
Types:	Piezoelectric and magnetostrictive. Detects average temperature.
Temperature Ranges:	32 to 3500°F (0 to 1927°C) for boiler/furnace units, higher with quartz probes
Inaccuracy:	1.5%, does not require calibration
Measurement Time:	15 s/path
Number of Paths:	1 or 2
Required Air Supply:	80 to 120 PSIG (5.5 to 8.3 bars)
Waveguide:	316 SS with 3 in. 150# pipe flange
Cost:	$5,000 to $10,000 or more
Partial List of Suppliers:	Scientific Engineering Instruments (www.sciengr.com)

OPERATING PRINCIPLE

The speed of sound in a gas is proportional to its temperature. This relationship between sound velocity and temperature has been known for nearly 100 years, but until recently it has been little used. Temperature dependence of velocity in an ideal gas is expressed as

$$v^2 = \frac{\gamma RT}{M_w} \qquad \textbf{4.15(1)}$$

where v is sound velocity, γ is the ratio of specific heats, R is the gas constant per mole, M_w is the molecular weight, and T is the absolute temperature.

A method of temperature measurement in a plasma jet involves the use two quartz probes set a fixed distance apart. The sound velocity is determined by circuitry for the continuous measurement of the ultrasonic wave transit time (see Figure 4.15a).

As temperature is detected by the measurement of time, calibration is not required and this linear sensor is well suited to harsh and abrasive environments. Because the gas itself is the thermometer element, errors such as leakage are absent and fast changes can be followed. Disadvantages include high cost, nonideal gas behavior, pressure correction, accurate determination of γ, and the inability to make point measurements.

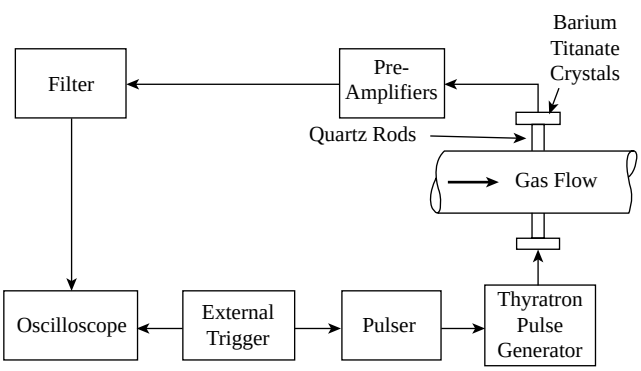

FIG. 4.15a
Simplified ultrasonic temperature measuring apparatus.

Ranges and Applications

Acoustical temperature sensors can theoretically measure temperature from the cryogenic range to plasma levels (20,000°C, or 36,000°F). The accuracy can approach that of a primary

© 2003 by Béla Lipták

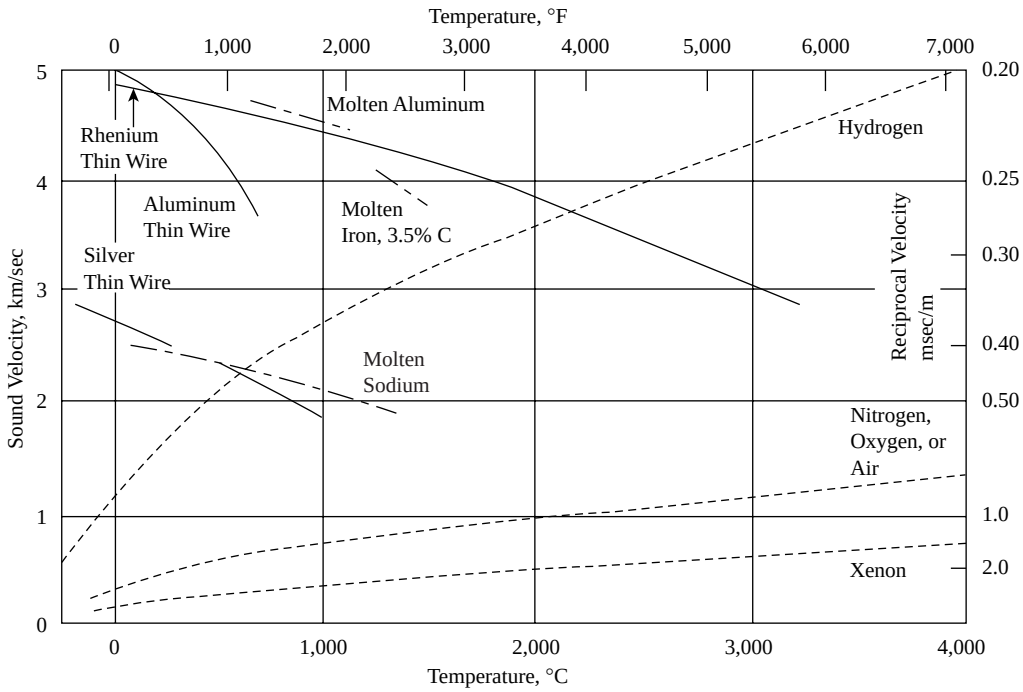

FIG. 4.15b
The velocity of sound increases in gases and decreases in liquids and solids as the temperature rises.[1]

standard as in the example of the ultrasonic interferometer developed by Harmon Plumb and George Cataland of the National Institute of Standards and Technology. A fluidic oscillator in which the resonant frequency of the cavity varies with temperature can be employed as a high-temperature pyrometer.

Ultrasonic thermometers are based on the effect of the temperature on the velocity of sound waves in the medium transmitting the sound waves. Temperature measurements can be made not only in gases, but also in liquids or solids. The relationship between sound velocity and temperature for various materials is shown in Figure 4.15b.

The acoustic velocity can be detected by immersing a rod or wire into the fluid or by using the medium itself as an acoustic conductor. The sensor rod can measure the temperature at a point or, by means of a series of constrictions or indents, can profile or average the temperature within the medium. This is done by measuring the time lags of the sound waves as they are reflected from the consecutive indents (see Figure 4.15c).

When the medium is used as the conductor of the ultrasonic pulse, the transducer can also be located within the vessel, but is usually placed on its external shell. This latter configuration is useful when measuring the temperature of solids or extremely hot or corrosive materials such as molten sodium. The acoustic pulse can be generated by a piezoelectric crystal cut to resonate at a frequency ranging from 0.5 to 3 MHz or by means of magnetostrictive materials.

The thin wire sensor (Figure 4.15c) is installed like a thermocouple (TC). A lead-in wire carries the pulse to the thin wire made of a material suitable for the process medium

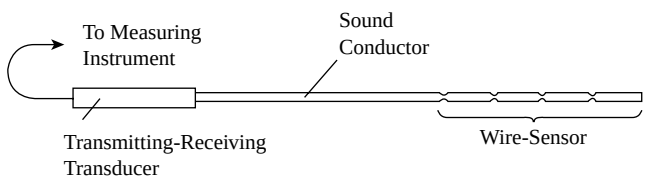

FIG. 4.15c
Ultrasonic thermometer probe.[2]

and its temperature range. Reflection from the beginning and the end of the thin wire provides the time lapse information for temperature determination. The selection of materials is more flexible than for TCs as only one material is involved.

Boiler/Furnace Applications

An acoustic sound source and a sound receiver can be located on the outside of opposing walls of a boiler, cement kiln, or furnace. Such noninvasive applications employ a transmitting transducer to send acoustic energy through the process medium. Receiving transducers detect the energy, and time delay is measured to determine the velocity of sound and therefore the temperature of the process. A nonintrusive, dual-path ultrasonic thermometer employing pneumatically generated sound waves is shown in Figure 4.15d. It does not require calibration; measures average temperature across two paths; has no moving parts other than the air supply valve; is linear; and can be provided with data display, logging, setup, and diagnostics either locally on a personal computer or remotely, using a modem connection.

© 2003 by Béla Lipták

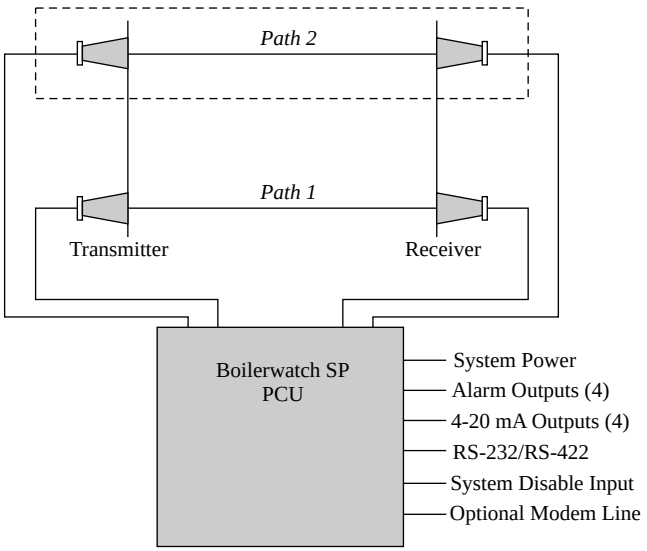

FIG. 4.15d
Dual-path sonic thermometer for boiler/furnace applications. (Courtesy of Scientific Engineering Instruments.)

Ultrasonic thermometry can be used at temperature extremes, in high electrical fields, or when the medium being measured is inaccessible. It is also useful for averaging the temperature of bulk materials or for profiling furnace temperatures. Other applications are tabulated in Table 4.15e.

CONCLUSIONS

Temperature measurement is a fast-changing technology. Today, smart temperature transmitters can be directly connected through data highways to any distributed control system. These transmitters also improve accuracy, because they eliminate the need for analog-to-digital conversion and are able to self-calibrate their spans, self-diagnose their sensor's integrity and automatically make selections from among their multiple sensors in order to provide automatic replacement or to match the prevailing temperature of the process.

Intelligent transmitters (as discussed in more detail in Sections 4.1, 4.10, and 4.13) reduce measurement error and increase measurement rangeability. Sonic and ultrasonic thermometers have a unique role for high temperature applications where the interest is in detecting the average temperature in harsh and abrasive process environments.

References

1. Lynnworth, L.C., "High Temperature Acoustics," *Naval Research Reviews*, 1970.
2. Michalski, L., Eckersdorf, K., and McGhee, J., *Temperature Measurement*, New York: John Wiley & Sons, 1991.
3. Lynnworth, L.C. and Carnavale, E.H., "Ultrasonic Thermometry Using Pulse Techniques," *Temperature*, 1972.

Bibliography

Adler, C.B., "Reliability Aspects of Temperature Measurement," Instrumentation, Systems, and Automation Society Conference, Chicago, 2001.

Atkinson, T.L., "Hear the Difference?," *International Cement Review*, June 2002, pp 49–50. A reprint of this publication is also available here: Hear the Difference? 1.45 MB, 2-page PDF file.

Bluestein, I., "Understanding Contact Temperature Sensors," *Sensors*, October 2001.

Colclough, A.R., "Primary Acoustic Thermometry: Principles and Current Trends," *Temperature*, 1982.

Derichs, W., Heb, F., Menael, K., and Reinartz, E., Acoustic Pyrometry: A Correlation Between Temperature Distributions and the Operating Conditions in a Brown Coal Fired Boiler, Second International Conference on Combustion Technologies For a Clean Environment, Portugal, July 1993.

Desmarais, R. and Breuer, J., "How to Select and Use the Right Temperature Sensor," *Sensors*, January 2001.

Doss, B., Chu, E., and Mason, H., (Acurex Environmental, Mountain View, CA), Ruiz, R. and Chan I., (Gas Research Institute, Chicago, IL), Kleppe, J. (SEI, Sparks, NV) and Jensen, J., (Bethlehem Steel Corp., Chesterton, IN) Steel Process Furnace Burner Control Using Acoustic Pyrometry, International Gas Research Conference, Orlando, FL, November 1992.

Featherston, R., Kazerooni, H., and Warburton, A., (Sierra Pacific Power Company) and Kleppe, J.A. (SEI, Sparks, NV), Application of the Output/Loss Method by Acoustic Measurement of Flue Gas Temperature and Flow, 1991 Heat Rate Improvement Conference, Electric Power Research Institute, Scottsdale, AZ, May 1991.

Fraden, J., *Handbook of Modern Sensors*, 2nd ed., Heidelberg: Springer-Verlag, 1997.

Hage, J., "Smart Temperature Transmitter Accents Accuracy," *Control*, September 1999.

Hilleman, D.D. and Kleppe, J.A., "Application of Acoustic Pyrometry as a Replacement for Thermal Probes in Large Gas & Oil Fired Utility Boilers," *Power-Gen Americas '93*, November 1993, p. 84.

TABLE 4.15e
Applications for Ultrasonic Thermometers[3]

Measured Object	*Temperature (°C)*	*Sensor or Medium*	*Sound Conductor*	*Transducer*	*Signal*
Gas	1500–15,000	N_2	Quartz	Piezoelectric	One period 1 MHz
Liquid	1000	Molten Na	Stainless steel	Piezoelectric	One period or period series 3–10 MHz
Solids with holes	3000	Re-wire	Tungsten	Magnetostrictive	Period series 0.1 MHz
Solids without holes	1500	Steel wire	Steel	Piezoelectric	Period series 1 MHz

© 2003 by Béla Lipták

Johnson, R., "Measuring the Hot, Difficult and Inaccessible," *Control Engineering*, June 2001.

Kleppe, J.A., "High-Temp Gas Measurement Using Acoustic Pyrometry," *Sensors*, January 1996.

Kleppe, J.A., "Adapt Acoustic Pyrometer to Measure Flue-Gas Flow," *Power*, Magazine, August 1995.

Kleppe, J.A., "Principles and Applications of Acoustic Sensors User for Gas Temperature and Flow Measurement," Proceedings Sensors Expo, Boston, May 1995, p. 337.

Kleppe, J.A., "The Reduction of NOx and NH3 'SLIP' in Waste-To-Energy Boilers Using Acoustic Pyrometry," *Power Gen Americas '93*, Dallas, TX, November 1993, p. 421. This publication is also available on our literature page.

Kleppe, J.A., "Acoustic Pyrometry Ups Boiler Efficiencies," *I&CS*, June 1991.

Kleppe, J.A. and Yori, L.G., Acoustic Pyrometry: A New Tool for The Operation and Maintenance Diagnostics of Fossil Fueled Utility Boilers, 4th Incipient Failure Detection Conference, Electric Power Research Institute, Philadelphia, October 1990.

Lynnworth, L.C., "Temperature Profiling Using Multizone Ultrasonic Waveguides," *Temperature*, 1982.

Lynnworth, L.C., Ultrasonic Measurements for Process Control, New York: Academic Press, 1989.

Lynnworth, L.C., Papadakis, E.P., Patch, D.R., Fowler, K.A., and Shepard, R.L., "Nuclear Reactor Applications of New Ultrasonic Transducers," *IEEE Transactions on Nuclear Science*, 1970.

Magison, E., "Temperature Measurement," *InTech*, October 25, 2001.

Michalski, L. et al., *Temperature Measurement*, 2nd ed., London: John Wiley & Sons, 2001.

Prentice, G.R., "Seven reasons Why Temperature Transmitters Are Better than Direct Wiring," *Process Heating*, June 1999.

Stockham, R., "Temperature Transmitters Take the Lead Over Direct Wiring," *Control and Instrumentation*, Product Survey Directory, 1999.

Volbrecht, A. and Gordon, W., "Temperature Measurement: Making Sense of it All," *Sensors*, June 1998.

Yori, L.G., Dams, F.H., and Kleppe, J.A., "Acoustic Pyrometers: Picture Windows to Boiler Performance," *Power*, August 1991, p. 65.

© 2003 by Béla Lipták

Pressure Measurement

5

5.1
SELECTION AND APPLICATION 712

Introduction 712
- Orientation Table 712
- Reference Pressures 715
- An Example 715

Selecting the Pressure Detector 716
- Accessories 716
- Intelligent Transmitters 717

Bibliography 717

5.2
ACCESSORIES (SEALS, SNUBBERS, CALIBRATORS, MANIFOLDS) 718

Pulsation Dampeners and Siphons 719
Freeze Protection 720
Chemical Seals 720
- Limitations 721
- Standard Seals 721
  - Process Connections 722
- Self-Cleaning Seals 722
- Volumetric Seal Elements 723

Valve Manifolds 724
Calibrations and Communicators 724
Bibliography 725

5.3
BELLOWS-TYPE PRESSURE SENSORS 726

Introduction 726
Basic Designs 727
- Absolute Pressure Sensors 727
  - Motion Balance 727
  - Force Balance 727
- Atmospheric Reference Sensors 728
  - Motion Balance 728
  - Single Bellows 728
  - Dual Bellows 728
  - Force Balance 728

Bibliography 728

5.4
BOURDON AND HELICAL PRESSURE SENSORS 731

The Bourdon Tube 732
- C-Bourdon Pressure Sensors 732
- Spiral Bourdon Pressure Sensors 734
- Helical Bourdon Pressure Sensors 734
  - Fused Quartz Helix Sensors 735

Bibliography 735

5.5
DIAPHRAGM OR CAPSULE-TYPE SENSORS 736

Introduction 737
Diaphragm Elements 737
- Materials and Configurations 737

Sensor Configurations 738
- Absolute Pressure Sensors 738
  - Motion Balance 738
  - Force Balance Design 739
  - Transmitter Ranges and Materials 739
- Atmospheric Reference 739
  - Motion Balance Design 739
  - Materials of Construction and Spans 740
  - Slack Diaphragms 740

© 2003 by Béla Lipták

Force Balance Designs 741
Features and Construction Choices 741
Pressure Repeaters 741
Bibliography 742

5.6
DIFFERENTIAL PRESSURE INSTRUMENTS 743

Introduction 744
Measurement Error 744
Example 745
Smart Transmitters Reduce Error 745
D/P Instrument Designs 745
Filter Status Indicators 745
D/P Switches 745
D/P Indicators 745
Temperature Compensation and Over-Range Protection 746
Ranges and Materials 746
Liquid Manometers 747
D/P Transmitters 747
Dry, Force Balance Design 747
Pneumatic Version 747
Suppression and Elevation 748
Flat and Extended Diaphragms 748
Ranges and Pressure/Temperature Ratings 748
Wafer Elements 748
Torque Tube Sensors 749
Low-Differential Transmitters 750
Membrane Type Design 750
Bibliography 750

5.7
ELECTRONIC PRESSURE SENSORS 751

Introduction 752
Electrical Safety 752
Strain Gauge Transducers 753
Historical Development 753
The Bonded Strain Gauge 754
Temperature Compensation 754
Detecting the Change in Resistance 754
Transducer Designs 755
Bonded Designs 755
Force Balance 755
Capacitance Transducers 756
Potentiometric Transducers 757
Resonant Wire Transducers 757
Piezoelectric Pressure Sensors 757
Magnetic Transducers 758
Inductive Elements 758
Linear Variable Differential Transformer 758
Inductive Transmitters 758
Reluctive Elements 759
Optical Transducers 760
Smart Transmitters 760
References 761
Bibliography 761

5.8
HIGH-PRESSURE SENSORS 762

Introduction 763
Mechanical High Pressure Sensors 763
Dead-Weight Piston Gauges 763
Button-Type Pressure Repeater 764
Helical Bourdon 764
Bulk Modulus Cells 764
Pressure-Sensitive Wires 765
Change-of-State Detection 765
Dynamic Sensors 765
Reference 765
Bibliography 765

5.9
MANOMETERS 766

Introduction 767
Liquid-Sealed Designs 767
Inverted Bells 767
Cylindrical and Ledoux Bells 767
Double Bell Unit 768
Ring Balance Manometers 768
McLeod Vacuum Gauges 768
90° Rotation Type 768
Piston-Type McLeod Gauge 769
Micromanometer With Precision Needle 770
Visual Manometers 770
Indicator Fluids 770
Liquid Barometers 770
Glass Tube Manometers 770
Well-Type Design 771
Vacuum Measurement 771
Multitube and Interface Manometers 771
Inclined Tube Designs 772
Micromanometers 772
Float Manometers 772
Servomanometers 773
Conclusions 773
Bibliography 773

5.10
MULTIPLE PRESSURE SCANNERS 774

Introduction 774
Rotary Pressure Scanners and Distributors 775
Scanning Frequency 775
Differential Pressure Scanning 775
Digital Interface Units 776

© 2003 by Béla Lipták

Rotary Air Signal Distributors 776
Air Signal Distributor Manifolds 776
Ramping Pressure Scanners 777
Electronic Pressure Scanners 777
Low Level Multiplexer 777
High Level Multiplexer 778
Bibliography 778

5.11 PRESSURE GAUGES 779

Introduction 780
The Gauge Components 780
The Gauge Housing 780
Gasket and Lens 780
Sensing Element 781
Safety Features 781
Dials and Pointers 781
Maximum Pointer 782
Digital Displays 782
Diaphragm-Type Vacuum Gauges 782
Special Features 782
Illumination 782
Temperature Compensation 782
Duplex and Differential Gauges 782
Failure Causes and Reliability 783
Conclusions 783
Reference 783
Bibliography 783

5.12 PRESSURE REPEATERS 785

Booster Relays 785
Flanged Repeaters 785
Force Balance Pressure Repeaters 786
Vacuum Repeaters 787
Button-Diaphragm Repeaters 787
Pressure Repeater Applications 788
Repeating a Vacuum 788
Level Measurement Applications 788
Bibliography 789

5.13 PRESSURE AND DIFFERENTIAL PRESSURE SWITCHES 790

Pressure Switch Features 790
Features and Configurations 790
Terminology 791
Selection 791
Differentials 791
Designs for Hazardous Area Applications 792
Differential Pressure Switches 792
Bibliography 793

5.14 VACUUM SENSORS 795

Introduction 796
Vacuum Gauge Classifications 796
Mechanical Vacuum Gauges 797
Manometers 797
Capacitance Manometers 798
Quartz Helix Vacuum Gauge 798
Viscous Friction of Spinning Ball 799
Molecular Momentum Vacuum Gauges 799
Mechanical Linkage Vacuum Gauge 799
Thermal Vacuum Gauges 799
Pirani Vacuum Gauge 800
Thermocouple Vacuum Gauge 800
Thermopile Vacuum Gauge 801
Convectron Vacuum Gauge 801
Ionization Vacuum Gauges 802
Hot Cathode Ionization Gauges 802
Cold Cathode Ionization Gauges 803
Vacuum Gauge Calibration 804
McLeod Vacuum Gauges 804
Calibration Reference Tubes 804
Vacuum Controllers 804
Aneroid Manostats 805
Cartesian Diver Regulators 805
Analog Electronic Controllers 805
Mass Flow Controllers 805
References 806
Bibliography 806

© 2003 by Béla Lipták

5.1 Selection and Application

B. G. LIPTÁK (1969) **J. T. HALL** (1982) **J. A. NAY** (1995, 2003)

Partial List of Suppliers:

ABB Instrumentation (www.abb.com/us/instrumentation)
Barton Instruments (www.barton-instruments.com)
Brooks Instrument (www.brooksinstrument.com)
Dresser Instrument (www.dresserinstruments.com)
Endress + Hauser Inc. (www.us.endress.com)
Fisher controls (www.fisher.com)
Foxboro/Invensys (www.foxboro.com)
Honeywell (www.iac.honeywell.com)
Marsh Bellofram (marshbellofram.com)
Moore Industries (www.miinet.com)
Omega Engineering (www.omega.com)
Rosemount/Emerson (www.rosemount.com)
Siemens (www.sea.siemens.com)
United Electric (www.ueonline.com)
Youkogawa Corp. of America (www.yca.com)

Pressure detection devices can be classified on the basis of the pressure ranges they can measure, on the basis of the design principle involved in their operation, or on the basis of their application. In this chapter, the various categories are not separated in any strict manner. Industrial instruments are discussed in detail, with emphasis on the most commonly used devices; laboratory instruments are covered in less detail.

INTRODUCTION

Each section starts with a brief summary of basic features applicable to the group of instruments discussed in that section. This information allows readers to quickly determine whether that category of instrumentation is suitable for their application.

This chapter covers a wide range of pressure sensors, which can measure pressures from ultrahigh vacuums, such as 10^{-13} mmHg, to ultrahigh gauge pressures approaching 400,000 PSIG (2,800 MPa).

The range of the costs and inaccuracies of these instruments are equally broad. A simple, 1.5 in. diameter, 5% inaccurate gauge might cost only $10, while a fused-quartz helix sensor with an error of 0.01% and a digital readout could cost $6000. The cost of pressure transmitters range from a few hundred dollars or less for the disposable models that have limited features, to $2000 for smart models with built-in digital PID control algorithms and/or digital networking capabilities.

Silicon microchip technology continues steadily to reduce the cost of advanced features, reducing the size and weight of hardware and improving their availability and accuracy, while extending the long-term stability their calibration. Many of the sensors are available with digital communication capability, which can serve calibration, adjustment, and reporting of process variables, allowing for complete plant-wide integration.

With so many types of sensors, it might seem that making the proper selection for a particular installation would be difficult and time consuming. Actually, this is not the case. A multitude of devices are covered here for the purpose of completeness, but for a typical industrial installation, the selection is fairly simple, and often repetitive.

Orientation Table

The reader should find Table 5.1a, the Orientation Table for Pressure Detectors, of value in narrowing the choices. For each category of sensors, this table indicates the overall pressure range that the category is capable of detecting. The table also notes whether the unit is available for industrial on-line installation or for laboratory use only. Although any transmitting instrument can easily be provided with an inexpensive analog or digital local indicator, the table differentiates those sensor categories, which primarily serve as local gauges or indicators. Also distinguished are the sensor categories, which are commonly available in microprocessor-based smart configurations.

The table also indicates the type of pressure reference used. When the environmental pressure surrounding the instrument

© 2003 by Béla Lipták

TABLE 5.1a

Orientation Table for Pressure Detectors

	Type of Design	Inline Device	Laboratory or Pilot Plant Device	Local Readout (Gauge)	Remote Readout Trans.	Smart Units Available
	Features					
Bellows	Abs. Press. Motion Balance	✓	✓	✓	✓	✓
	Abs. Press. Force Balance	✓	✓		✓	✓
	Atm. Press. Ref. Motion Bal.	✓	✓	✓	✓	✓
	Atm. Press. Ref. Force Bal.	✓	✓		✓	✓
	Aneroid Manostats	✓	✓			
Bourdon	C-Bourdon	✓	✓	✓	✓	✓
	Spiral Bourdon	✓	✓	✓	✓	✓
	Helical Bourdon	✓	✓	✓	✓	✓
	Quartz Helix		✓	✓	✓	
Diaphragm	Abs. Press. Motion Balance	✓	✓	✓	✓	✓
	Abs. Press. Force Balance	✓	✓		✓	✓
	Atm. Press. Ref. Motion Bal.	✓	✓	✓	✓	✓
	Atm. Press. Ref. Force Bal.	✓	✓		✓	✓
Electronic	Strain Gauge	✓	✓	✓	✓	✓
	Capacitive Sensors	✓	✓		✓	✓
	Potentiometric	✓	✓		✓	✓
	Resonant Wire	✓	✓		✓	✓
	Piezoelectric	✓	✓		✓	✓
	Magnetic	✓	✓		✓	✓
	Optical	✓	✓		✓	✓
High-Press. Sensors	Dead Weight Piston Gauge		✓	✓		
	Bulk Modulus Cell	✓	✓		✓	
	Manganin Cell		✓		✓	
Manometers	Inverted Bell	✓	✓	✓	✓	
	Ring Balance	✓	✓	✓	✓	
	Float Manometer	✓	✓	✓	✓	
	Barometers	✓	✓	✓		
	Visual Manometers	✓	✓	✓		
	Micromanometers		✓	✓		
Pressure Repeaters.	D/P Cell	✓	✓		✓	
	Std. Diaphragm	✓	✓		✓	
	Button Diaphragm	✓	✓		✓	
Ioniza-tion	Hot Cathode		✓	✓	✓	✓
	Cold Cathode		✓	✓	✓	✓

Applicable Pressure Ranges

mmHg absolute (1 mmHg = 133 Pa)

10^{-14} 10^{-10} 10^{-6} 10^{-3} 10^{-1} 1 50 200 400 600

"H_2O (1"H_2O = 250 Pa)

–300 –200 –100 –10 –5 –1 ±0.1 +1 +5 +10 +100 +200 +300

PSIG (1 PSIG = 6.9 kPa)

4 7 11 10^2 10^3 10^4 10^5 10^6

© 2003 by Béla Lipták

TABLE 5.1a Continued

Orientation Table for Pressure Detectors

		Features					Applicable Pressure Ranges
	Type of Design	Inline Device	Laboratory or Pilot Plant Device	Local Readout (Gauge)	Remote Readout Trans.	Smart Units Available	mmHg absolute (1 mmHg = 133 Pa); "H_2O (1 "H_2O = 250 Pa); PSIG (1 PSIG = 6.9 kPa)
Thermal	Thermocouple	✓	✓	✓	✓	✓	
	Thermopile	✓	✓	✓	✓	✓	
	Resistance Wire-Pirani	✓	✓	✓	✓	✓	
	Convectron	✓	✓	✓	✓	✓	
Mechanical	Quartz Helix		✓	✓		✓	
	McLeod	✓	✓	✓			
	Molecular Momentum	✓	✓	✓			
	Capacitance	✓	✓	✓	✓	✓	
	Spinning Ball	✓		✓	✓	✓	

10^{-14} 10^{-10} 10^{-6} 10^{-3} 10^{-1} 1 50 200 400 600 4 7 11 10^{2} 10^{3} 10^{4} 10^{5} 10^{6}

–300 –200 –100 –10 –5 –1 ±0.1 +1 +5 +10 +100 +200 +300

Ⓥ - Indicates that the device uses full-vacuum reference in its operation.

Ⓐ - Indicates that the device uses atmospheric pressure reference.

● - Indicates that the operating priciple used does not involve the use of reference pressure.

© 2003 by Béla Lipták

TABLE 5.1b
Pressure Conversion

To Convert to Pascals (Pa) From	*Multiply by*
atmosphere (standard)	1.01×10^5
atmosphere (technical = 1 kgf/cm^2)	9.81×10^4
bar	1.00×10^5
centimeter of mercury (0°C)	1.33×10^3
centimeter of water (4°C)	98
dyne/cm^2	0.1
foot of water (39.2°F)	2.98×10^3
gram-force/cm^2	98
inch of mercury (32°F)	3.39×10^3
inch of mercury (60°F)	3.37×10^3
inch of water (39.2°F)	249
inch of water (60°F)	248
kgf/cm^2	9.81×10^4
kgf/m^2	9.81
kgf/mm^2	9.81×10^6
kip/in^2 (ksi)	6.89×10^6
millibar	100
millimeter of mercury (0°C)	133
lbf/ft^2	47.8
lbf/in^2 (psi)	6.89×10^3
psi	6.89×10^3
torr (mmHg, 0°C)	133

Example: 1 PSI = 6.89×10^3 Pa/PSI = 6890 Pa
= 27.7 in. water
= 2.31 ft. water
= 2.04 in. Hg
= 0.07 kgf/cm^2

is used as reference (for the measurement of gauge pressures), it is noted by Ⓐ for atmospheric. When the reference is an evacuated chamber with almost perfect vacuum sealed inside, which is used for the measurement of absolute pressures, this type of reference is noted by Ⓥ. There is no reference for differential pressure devices because they just compare one pressure against another. A few measurement technologies, such as the thermal and ionization type vacuum gauges, do not depend on the use of reference pressures or vacuums within the instrument itself.

Table 5.1b gives a variety of pressure conversion multipliers.

In addition to the general orientation provided by Table 5.1a, a summary of the features of some of the pressure instruments that are commonly used in the manufacturing, petrochemical, and power industries is given in Table 5.1c. Note that in actual practice the metric ranges are also rounded.

Reference Pressures

Reliable reference pressures are important, because they can be a source of error just as much as an error on the measurement side can. In the case of absolute pressure sensors, the reference chamber cannot be fully evacuated to absolute zero pressure, but full vacuum is only approached within a few thousands of a millimeter of mercury (torr). This means that a nonzero value is being treated as zero, which, when measuring higher vacuums, can cause significant errors. The other potential error source is the possibility of in-leakage of atmospheric air into the vacuum reference chamber of absolute pressure detector.

In case of positive pressure detectors, if the barometric pressure is the reference, atmospheric pressure variations cause a problem. As the atmospheric pressure can vary, by about 1 in. of mercury (13.6 in. or 0.345 m of water), the resulting error can be significant if the process pressure is near atmospheric. In addition, the output signal of the sensor can change even when the process pressure is constant. The resulting error might not be significant when detecting high gauge pressures, but it can be a problem with compound detectors.

A compound pressure sensor is one that operates at near atmospheric pressures and can detect the pressures on both above and below atmospheric. In controlling the pressure in sealed rooms (clean rooms, biohazard containment chambers, ordinary tight buildings, etc.) where the ventilation systems may purposely hold the pressure above or below atmospheric pressure, this variable reference can be a source of problems. In selecting pressure measurement devices for such applications, the design engineer must not ignore this and must either determine that the effect of barometric pressure variation can be safely neglected, or must measure and correct for this variation in the measurement and control systems.

An Example

Take the example of a chemical reactor that has to be evacuated to 10 mmHg before being purged at 1 in. (25.4 mm) H_2O positive pressure. After purging, when the reaction starts, this reactor operates at a higher positive pressure.

Due to the problem with the references, there is no single pressure transmitter that can detect all these pressures. If a vacuum reference is used, the purge pressure of 1 in. H_2O over atmospheric cannot be reliably detected. If an atmospheric reference is used, the 10 mmHg vacuum cannot be accurately detected, because it could be subject to a 25 mmHg error. In the past, the logical solution was to use multiple sensors. Today, we can also use intelligent transmitters, which are provided with multiple references and are capable of switching them on the basis of the batch sequence of the reactor.

© 2003 by Béla Lipták

TABLE 5.1c
Pressure Detector Errors, Ranges, and Costs

Type	*Range*	*Inaccuracy*	*Approx. Cost*
General-purpose Bourdon-tube indicator	15–10,000 PSIG (1–690 bars)	2%	$100
High-accuracy test gauge	Low vacuum to 3000 PSIG (Low vacuum to 207 bars)	0.1% to 0.01%	$300–$6,000
Bourdon/spiral case-mounted indicator/recorder	Low vacuum to 50,000 PSIG (Low vacuum to 3450 bars)	0.50%	$1,200
Spring-and-bellow case-mounted recorder	Low vacuum to 50 PSIG (Low vacuum to 3.5 bars)	0.50%	$1,600
Nested capsular case-mounted recorder	10–90 PSIG, (0.7–6.2 bars)	0.50%	$1,600
Low-pressure bell case-mounted indicator	–0.1 to 0.1 in. H_2O (–3 to 3 mm H_2O)	2%	$2,200
Beam-mounted strain gauge (sensor only) 4–20-mA DC output	0–1000 PSIG (0–69 bars)	0.25%	$800
Piezoresistive transducer 4–20-mA DC output	0–5000 PSIG (0–365 bars)	0.50%	$500
"Smart" piezoresistive transmitter 4–20-mA DC output	0–6000 PSIG (0–414 bars)	0.10%	$1,200–$2,000
"Smart" field communicator for remote calibration and configuring of "smart" transmitter	—		$1000–$3,000
Capacitive sensor/transmitter	1 in. H_2O–6000 PSIG (25 mm H_2O–414 bars)	0.2%	1000

SELECTING THE PRESSURE DETECTOR

When local pressure indication is required and the process pressure range is between 0 to 10 in. H_2O (2.6 kPa) and 0 to 100,000 PSIG (690 MPa), the conventional pressure sensors, which are described in Sections 5.3, 5.4, 5.5, and 5.11 can be considered. The local pressure gauges, described in Section 5.11, can have ranges from 10 in. H_2O (2.6 kPa) up to 100,000 PSIG (690 MPa).

For the measurement of near-atmospheric pressures, the bellows diaphragm sensors and manometers (Sections 5.3, 5.4 and 5.9) are the most likely choices. Similarly, for local vacuum measurement down to 1 mmHg (0.13 kPa), the diaphragm, the bellows-type, and the vacuum manometers (Sections 5.3, 5.5, and 5.9) will give satisfactory performance. Vacuum sensors, ranging from 10^{-12} to 760 mmHg, are discussed in Section 5.14. See Figure 5.14a for a summary of all the available vacuum sensors and their ranges.

Where remote transmission is required, the force balance or motion balance transmitters (Sections 5.3, 5.4, 5.5, and 5.7) will handle most applications. They can detect vacuums down to 1 mmHg (0.13 kPa) absolute and gauge pressures up to 100,000 PSIG (690 MPa). When small, near-atmospheric or high pressures up to 200,000 PSIG (1,400 MPa) are to be transmitted, the differential pressure or the electronic sensors described in Sections 5.6 and 5.7 should be considered. The high-pressure sensors, described in Section 5.8, are the recommended choices for pressures from 20,000 PSIG (140 MPa) up to 400,000 PSIG (2,800 MPa).

Multiple pressure sensors, including scanners and multiplexers, are discussed in Section 5.10. Pressure repeaters capable of repeating pressures from full vacuum to 10,000 PSIG (69 MPa) are described in Section 5.12. Pressure and differential pressure switches for applications at up to 20,000 PSIG (138 MPa) pressures can be found in Section 5.13.

Accessories

The pressure detectors are often provided with various accessory items (discussed in Section 5.2), which serve to protect them from process conditions and environmental effects, are provided to reduce maintenance. The most common causes of failure or maintenance problems include plugging, vibration, freezing, corrosion, excessive temperatures, and hard-to-handle process materials. The various protection devices discussed in Section 5.2 can assist in making the installation

© 2003 by Béla Lipták

less sensitive to such effects and can reduce the required tasks of periodic servicing, testing, calibration, and maintenance.

Intelligent Transmitters

Microprocessor based pressure and differential pressure transmitters are widely available today. Such a transmitter includes an input circuit referred to as an analog-to-digital (A/D) converter that converts the sensor input into a digital signal before it is sent to the microprocessor. The microprocessor performs the manipulations of ranging, linearization, error checking, and conversion and either transmits the reading digitally or sends the resulting value to the output digital-to-analog converter (D/A), which converts the signal back to an analog signal of 4–20 mA DC, 0–1 V DC, or 0–10 V DC.

Just as microprocessors have evolved in sophistication, so have A/D and D/A converters, increasing their resolution from 8-bit up to the 18-bit, which has been used in the better transmitters since the beginning of 2000. These advanced transmitters also check their own calibration on every measurement cycle and incorporate self-diagnostics, while being configurable by using simple personal computer (PC) software. The reconfiguration process is not only quick and convenient, but also tends to lower inventories by making the transmitters interchangeable.

The benefits of remote setup, configuration, and access to diagnostics has resulted in a dramatic increase in the use of proprietary protocols that are supported by many of the larger manufacturers. A wide variety of intelligent pressure transmitters are available on the market today. Some common features of the leading models include not only digital and analog outputs, but also multiple ranges, remote zero and span settings, configuration push buttons, PC software and Hand Held Configurators. The available bus and network protocols include Highway Addressable Remote Transducer (HART), Foundation Fieldbus, Profibus, Ethernet, or just 4–20 mA. Some field locations will benefit from local indication and this feature is optional with most manufacturers.

Bibliography

Benedict, R.P., *Fundamentals of Temperature Pressure and Flow Measurements*, 3rd ed., New York: John Wiley & Sons, 1984.

Cooper, F.G., "Low Pressure Sensing and Control," *InTech*, September 1992.

Dally, J.W., Riley, W.F., and McConnell, K.G., *Instrumentation for Engineering Measurements*, 2nd ed., New York: John Wiley & Sons, 1993.

Dyer, S.A., *Wiley Survey of Instrumentation and Measurement*, New York: John Wiley & Sons, 2001.

Faust, E., "Digital Pressure Indicators versus Manometers," *Measurements & Control*, April 1993.

Ferree, S.R., "Sensors: Simple to Smart to Systems," *InTech*, November 1991.

Figliola, R.S. and Beasley, D.E., *Theory and Design for Mechanical Measurements*, 3rd ed., New York: John Wiley & Sons, July 2000.

Gray, H., "Capacitive Pressure Transducers," *Measurements and Control*, June 1991.

Hughes, T.A., Pressure Measurement, EMC series, downloadable PDF, Instrumentation, Systems, and Automation Society, Research Triangle Park, NC, 2002.

Instrumentation, Systems, and Automation Society, Pressure (video, VHS, PAL & NTSC), Research Triangle Park, NC, 2002.

Instrumentation, Systems, and Automation Society, Pressure: Indicators and Transmitters, CD-ROM, Research Triangle Park, NC, 2002.

Instrumentation, Systems, and Automation Society, Process Measurement Series, CD-ROM, Research Triangle Park, NC, 2002.

Jager, R., "A Smart Transmitter for Differential Pressure Measurement," *M&C News*, September 1992.

Johnson, D., "Pressure Sensing: It's Everywhere," *Control Engineering*, April 2001

Juanarena, D.B., "Pressure Measurement in Cryogenic Environments," Instrumentation, Systems, and Automation Society Conference, Houston, TX, October 1992.

Lewis, J.C., "Pressure Sensing: A Practical Primer," *InTech*, December 1989.

Loth, S.A., "Picking the Perfect Pressure Transducer," *InTech*, July 1988.

Nishikawa, T. et al., Intelligent DP Transmitter Using a Resonant Single-Crystal Sensor, Instrumentation, Systems, and Automation Society 1993 Technical Conference, Chicago, September 19–24, 1993.

Paros, I.M., "Fiber-Optic Resonator Pressure Transducers," *M&C News*, September 1992.

"Reluctive and LVDT Pressure Transducers," *Measurements and Control*, September 1992.

Stockdale, R., "Advanced Pressure Sensor Designs Benefit Control Systems," *Control Engineering*, June 1991.

Studebaker, P., "Engineers Find New Uses for Pressure Transmitters," *Control*, February 1994.

Weiss, J., "Sensors: Toward the Next Generation," *InTech*, September 1993.

© 2003 by Béla Lipták

5.2 Accessories (Seals, Snubbers, Calibrators, Manifolds)

B. G. LIPTÁK (1969, 1982) **J. A. NAY** (1995, 2003)

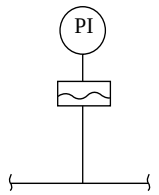

Flow Sheet Symbol

Types of Accessories:
A. Chemical seals
B. Snubbers, pulsation dampeners
C. Manifolds
D. Dead-weight testers, calibrators
E. Smart communicators, calibrators

Design Pressure (Seals): Up to 2500 PSIG (17 MPa) with standard units; specials to 20,000 PSIG (138 MPa) and higher

Design Temperature (Seals): Up to 600°F (316°C) with standard units; specials up to 1500°F (815°C)

Materials of Construction: Standard seal lower housing can be Kynar, polypropylene, polyvinyl chloride, chlorinated polyvinyl chloride, glass- or carbon-filled Teflon, brass, carbon steel, 304 or 316 stainless steel, Carpenter 20, Hastelloy B or C, Inconel, Monel, nickel, titanium, or tantalum-plated. Diaphragms can be Buna-N, Kel-F, Teflon, Viton, 316 stainless steel, Hastelloy B or C, Inconel 600 Monel K500, Nickel 200, tantalum, titanium, Carpenter 20, silver, or gold-plated. Several manufacturers can provide other special materials.

Costs: Snubber and pulsation dampener costs range from $10 to $300 depending on features and materials of construction. A few seals are available for less than $50. A seal similar to Figure 5.2d with carbon steel wetted parts is about $130; with wetted parts in stainless steel or Monel it is about $300, in Inconel or Carpenter 20 about $400, in nickel or titanium about $500, and in Hastelloy B or C about $750. A 3-in. (76-mm) flanged seal with a 6-in. (152-mm) extended diaphragm seal with a short capillary with stainless steel wetted parts is about $900 and with Hastelloy C wetted parts may be over $2000. Manufacturers may offer only 1 or 2 seal configurations, but many offer more than 50 choices among more than a dozen detail options, providing an extremely wide range of choices and costs. Shutoff valve manifolds range from $100 up depending on features and materials of construction. For dead-weight testers see Section 5.8. The cost of smart field communicators, which include recalibration capability, range from $800 to $4000.

Partial List of Suppliers:
3D Instruments LLC (D) (www.3dinstruments.com)
Ametek U.S. Gage M & G (A, B) (www.ametekusg.com)
Ametek/Rochester Instruments (E) (www.rochester.com)
Anderson Greenwood (B, C) (www.andersongreenwood.com)
DH Instruments Inc. (D, E) (www.dhinstruments.com)
Differential Pressure Plus, Inc. (B) (www.differentialpressure.com)
Dresser Measurements (A, E) (www.dresserinstruments.com)
Dwyer Instruments Inc. (A, B) (www.dwyer-inst.com)
FLW Inc. Ashcroft (A, C) (www.flw.com/ashcroft.htm)
H.O. Trerice Co. (A) (www.hotrerice.com)
Helicoid Div. of Bristol Babcock (A, B, C) (www.bristolbabcock.com)
Hex Valve Div. of Richards Industries (C) (www.hexvalve.com)
Hoke Inc. (C) (www.hoke.com)
Honeywell Inc. (A, B, E) (www.acs.honeywell.com)

© 2003 by Béla Lipták

ITT Conoflow (A) (www.conoflow.com)
Mid-West Instruments (A, B) (www.midwestinstrument.com)
MKS Instruments (D) (www.mksinst.com)
Noshok, Inc. (A, B) (www.noshok.com)
Nottingham Gauge & Thermometer Co. (A) (www.gaugesandthermometers.com)
Ocean International Suppliers, Inc. (C) (www.oceanint.com)
Parker Hannifin Instrumentation Products Div. (B, C) (www.parker.com)
Red Valve Co. Inc. (A) (www.redvalve.com)
Reotemp Instrument Corp. (A, B, D) (www.reotemp.com)
Rosemount Inc. (A, C, E) (www.rosemount.com)
Ruska Instrument Corp. (D) (www.ruska.com)
Sealtek Co. (A) (www.sealtek.co.nz)
Siemens Moore (C, E) (www.sea.siemens.com)
Smar International (A, D, E) (www.smar.com)
Swagelok Co. (C) (www.swagelock.com)
Versa Gauge Division of Winters Instruments (A, B) (www.versagauge.com)
Wallace & Tiernan (D) (www.wallace-tiernan.com)
Weiss Instruments Inc. (A, B) (www.weissinstruments.com)

Combined in this section are a variety of devices that might serve as accessories to pressure instruments. They range from simple snubbers and shutoff valves to a wide variety of chemical seal devices. These mechanical components serve to protect the pressure instruments from high or low temperatures, plugging, corrosion, and pulsation, or to provide the means for isolating the instrument for removal or maintenance. Other more sophisticated and more expensive accessories used in connection with pressure instrumentation are the various types of calibrators and electronic communication devices used in combination with the smart transmitters discussed in Section 5.1.

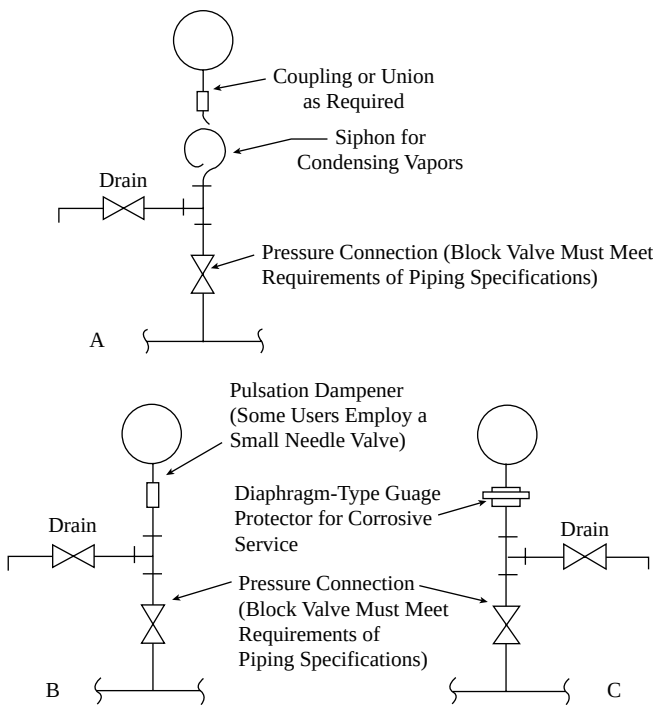

FIG. 5.2a
Pressure instruments can be protected against high temperature (A), pulsating pressure (B), or corrosion (C).

PULSATION DAMPENERS AND SIPHONS

On steam service, it is desirable to prevent the live steam from entering the sensing element, which could cause temperature damage. Such prevention is accomplished by installing a coil pipe siphon between the gauge and the process connection (Figure 5.2a).

Where sudden pressure shocks or rapidly fluctuating pressures are expected, snubbers or pulsation dampers are installed between the gauge and the process. Some of the snubber design variations are illustrated in Figure 5.2b. One design consists of a fitting with a corrosion-resistant porous metal filter disk. Such device delays the equilibrium reading on the indicator by about 10 seconds. Another snubber design depends for its dampening action on a small piston in the inlet fitting; the piston rises and falls with pressure impulses, absorbing shocks and surges. Still another snubber design uses the adjustable restriction created by a microvalve in the inlet fitting to damp pulsations. Where system dynamics are important to the measurement and/or to system safety, the time delay effects of damping must be considered when selecting safety trip settings. Pulsation dampeners should not be used with any instrument installed specifically to measure high frequency pulsations; this may be necessary when investigating the discharge characteristics of a reciprocating pump, or diagnosing cavitation symptoms of a centrifugal machine.

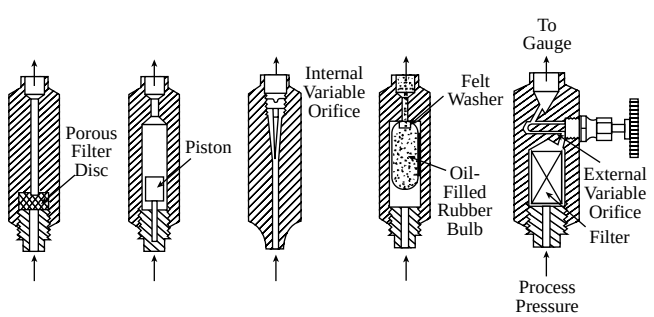

FIG. 5.2b
Variations on snubber designs.

© 2003 by Béla Lipták

FREEZE PROTECTION

Where there is a possibility that the process fluid might freeze inside the pressure element, steam tracing can be provided or small electric heaters can be installed inside the cases of larger instruments. A heater can provide a temperature rise of about 80°F (27°C) and is available with gauges having dial diameters of 4.5 in. (112 mm) or larger. For smaller instruments, resistance-wire-type heat tracing can be wrapped around the transmitter. When this is done, a thermostat should be included to prevent the case from exceeding normal design temperatures. This is particularly important for electronic instruments. Some manufacturers can furnish hollow bolts in the transmitter housing with provisions for connecting them to a low-pressure steam supply. This can be useful in plants that are provided with steam-tracing systems for the process piping. The need for freeze protection is not limited to water services. Freeze protection is also provided for liquid metal systems (sodium, potassium, etc.) and for high-viscosity fluids such as bunker fuels and molasses. Instruments connected to such processes should always be protected from freezing of the process fluids.

CHEMICAL SEALS

Chemical seals or diaphragm protectors can be provided with most pressure sensors. These components serve the following functions:

1. They avoid freezing, gelling, or settling out of the process fluid in the sensing line due to temperature changes.
2. They prevent poisonous, noxious, radioactive, or corrosive process materials from entering the pressure sensor.
3. They prevent slurries or viscous polymers from entering, plugging the detector element.

In the following discussion, several chemical seal designs are described. All are filled with essentially noncompressible liquids that hydraulically transmit the process pressure to the protected pressure element.

Filling fluids are selected to provide low thermal expansion and low viscosity and to avoid danger of process contamination in case of diaphragm rupture. Table 5.2c lists some filling fluids, their applicable temperature ranges, and their thermal expansion coefficients. One of the popular filling fluids is a 70 to 30% mixture of glycerin and water used between 30 and 300°F (–1 to 149°C). For lower temperatures, ethyl alcohol, kerosene, toluene, or silicon oils are used in the –50 to 100°F (–46 to 38°C) range. Some silicone oils, fluorocarbons, and halocarbons can stretch the range to 500°F (260°C). For high temperatures sodium-potassium alloys are available for the range of 70 to 1500°F (25 to 816°C). The gasketing materials are plastics, elastomers, or Teflon up to 400°F (250°C), while on high temperature services metallic gaskets or special volumetric elements are used. All-welded designs are also available for installations where gaskets are inappropriate.

TABLE 5.2c
Temperature Ranges and Thermal Expansion Characteristics of Chemical Seal Filling Fluids

	Temperature Range		*Expansion Coefficient*
Filling Fluid	*°F*	*°C*	*(SG/°F)*
Toluene	–40 to 200	–40 to 93	0.00063
Dow Corning silicone (DC-200)	–30 to 300	–34 to 148	0.00075
Kerosene	–30 to 350	–34 to 177	0.00051
Hooker (FS-5)	–20 to 300	–29 to 148	0.00049
Mercury*	–30 to 700	–34 to 371	—
Dibutyl phthalate	20 to 300	–7 to 148	0.0008
22% sodium–78% potassium	20 to 1400	–7 to 760	—
70% glycerin–30% water	30 to 300	–1 to 148	0.00051
Instrument oil	35 to 300	2 to 148	0.00035
Light turbine oil	40 to 300	4 to 148	0.00048
Dow Corning silicone (DC-550)	40 to 500	4 to 260	0.00042
Dow Corning silicone (DC-703)	40 to 600	4 to 316	0.00055
96.5% glycerin	70 to 450	21 to 232	0.00039
56% sodium–44% potassium	70 to 1500	21 to 815	

* No longer used due to environmental/biological hazard. If found in an old installation, it should be removed only by, or under the direction of, a certified health physicist.

© 2003 by Béla Lipták

Even with the proper selection of filling fluids, the temperature effects will not be completely eliminated. Some expansion coefficients based on specific gravity are listed in Table 5.2c. Resulting temperature effects may typically be about 3 PSI/100°F (21 kPa/38°C). Temperature effects are caused by direct expansion of the fill fluid against the elasticity of the diaphragm, and by variations in the weight of fluid if there is an elevation or suppression between the sensing point and the instrument. Therefore, it is desirable to calibrate critical units at operating temperature to eliminate errors.

The common fill fluids listed in Table 5.2c are not expected to decompose at the highest process temperature listed, and their viscosities are expected to remain low enough to operate the process elements efficiently at the lowest process temperatures. Note that the sodium–potassium (NaK) mixtures freeze not far below room temperature. The eutectic (78% Na–22% K) freezes at 10°F (–12.3°C); other mixtures between 40 and 90% K freeze at increasing temperatures up to room temperature. Since they shrink upon freezing, it is not likely that any damage will occur, but the instrument will suddenly stop working and may become a safety hazard or cause a product deviation due to this loss of function.

Limitations

Other limitations of chemical seal protectors involve the spans and the vacuum applications. The working pressure ranges with metal diaphragm seal protection should have an upper range value greater than 50 PSI (350 kPa), because otherwise the spring rate of the diaphragm will introduce excessive errors. Displacement of the attached instrument over the expected measurement span is also important to selection of a seal; the seal's diaphragm must not bottom out, even partially, as the pressure increases and fluid is displaced into the instrument. This is becoming less of a problem since modern electronic transmitters typically have displacements of less than 0.1 in.^{3} (1.6 cm^3).

The use of diaphragm seals on vacuum service can be troublesome, but careful selection of fill fluid combined with high vacuum filling will usually allow satisfactory operation on low to medium vacuum services. If pressures go below the fill fluid's vapor pressure or if dissolved vapors come out of solution, gas bubbles will be present and the filling fluid will no longer be incompressible. The higher the operating temperature (at any point along the capillary), the more severe this limitation becomes since temperature effects on vapor pressure are exponential. Therefore, it is suggested that devices other than liquid-filled chemical seals be used on high vacuum service. On low to medium vacuum services, Silicone 704 is recommended as the filling fluid, since its vapor pressure is less than 1.00×10^{-6} mmHg at near room temperature.

The measuring instrument can be direct-connected to the seal, or it can be connected by capillary tubing. In general, it is desirable to limit the tubing length to 25 ft (7.5 m) and to route the capillary through an area where the ambient temperature around the capillary and the instrument case is relatively steady and in the range of 50 to 110°F (10 to 43°C). Heat tracing can be added if the fill fluid can freeze or become unacceptably viscous at normally expected ambient temperatures. Some manufacturers will provide up to 50 ft (15 m) of capillary for special orders.

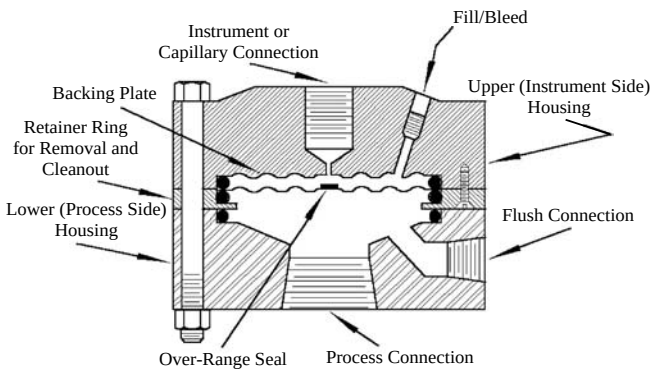

FIG. 5.2d
Components of a representative chemical seal.

Standard Seals

Figure 5.2d illustrates the main components of a representative chemical seal: the upper and lower body and the diaphragm. The upper housing is in contact with the filling fluid only; therefore, if the environment is not corrosive, standard construction materials are acceptable. Once the seal is attached to the pressure instrument, either directly or through a capillary, the filling screw is used to fill the total system under vacuum.

Factory-filled seals furnished with the pressure instrument provide the most reliable sealed system, and can be provided by most suppliers if the length of the sensing capillary can be specified. However, field filling is also fairly common and can be accomplished reliably as long as a high vacuum source is available to evacuate the sensing line prior to and during filling, and as long as the fill fluids can be easily handled. It is important that the filling screw be reliably closed off without introduction of air. In some cases, the filling screw is further sealed by welding, or is replaced by a capillary which can be crimped and seal welded. One should not attempt to fill a system by simply pressure purging the fill fluid from one end to the other because even a tiny bubble can cause serious error.

The diaphragm seal assembly shown is a composite of several representative designs. Some seal manufacturers use a single diaphragm element welded to the upper housing. Others use a capsule consisting of a thin lower diaphragm bonded to a sturdy corrugated backup plate, and the whole assembly is screwed into the top housing. It is important that the diaphragm be as slack as possible, within the confines of necessary durability, so that it moves freely and hydraulically transmits the pressure without adding any differential. If the diaphragm is an elastomer, the outer edge of the diaphragm itself may be used as the sealing gasket.

© 2003 by Béla Lipták

Leakage is the most frequent source of seal failure. When it occurs, the diaphragm is pressed against the corrugated backup plate, which prevents diaphragm distortion and seals in the process pressure. (The instrument, however, ceases to operate.) Many designs incorporate a metal or elastomer valve and seat to stop any further flow into the capillary. The rupture pressure rating of conventional seals is 2500 PSIG (17 MPa). The diaphragm capsule is in contact with the process fluid, and therefore it is available in corrosion-resistant metallic construction or with a lining of Kel-F, Teflon, or a similar material.

The top section and the diaphragm capsule can often be removed while remaining connected to the associated instrument without disconnecting the bottom housing from the process. This feature allows the lower housing to be permanently welded to the process and enables the operator to clean the assembly without refilling or recalibrating the unit. Where elastomer seals are used on the diaphragm, a retainer ring is provided to allow this operation. The bottom housing, which is in contact with the process media as well as the atmospheric environment, is available in many corrosion-resistant metals or plastic materials. A flushing connection can be provided on the lower housing to flush the pressure chamber below the diaphragm. This allows for continuous or intermittent purge to remove the material buildup that may have accumulated below the diaphragm or in the connecting piping.

Selection of the bolting materials may be the primary determining factor in establishing pressure rating. If necessary to replace bolting, be sure to use bolts of the original strength class. Changing from high-strength carbon steel bolts to ordinary stainless steel bolts may reduce the pressure rating by 50%. Some designs do not use bolts, incorporating a pipe union type of joint, or a totally welded system.

Process Connections Every type of process connection, including sanitary spud or tri-clamp, can be accommodated for the process side of the seal. Figure 5.2e shows off-line seal design with screwed or flanged process connections. These units are utilized where the seal is needed to provide protection against corrosion or freezing. Due to the dead-ended cavity between the process line and the seal, these designs are not suitable to protect against plugging.

Figure 5.2f illustrates the in-line or flow-through designs in which the dead-ended cavities have been minimized. These units can be considered for both plugging and corrosive services, but their removal for maintenance necessitates the draining of the process pipe. Because the displacement in these seals is small, they are compatible with only small displacement-sensing elements, such as Bourdon tubes, force balance diaphragms, spiral and helical elements, or small-diameter bellows. For instruments with larger than 0.75 in. (19 mm) diameter bellows, the capacity of the standard seal is not sufficient to match the displacement of the pressure element, and large-capacity seals are needed. Such a design using a rolling diaphragm is illustrated in Figure 5.2g.

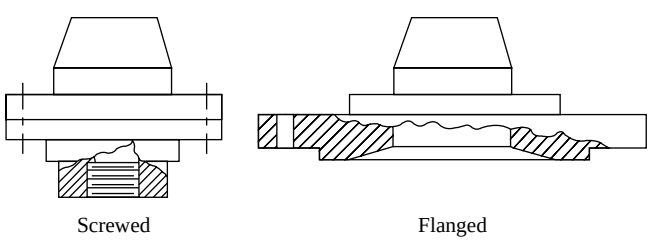

FIG. 5.2e
Off-line chemical seals.

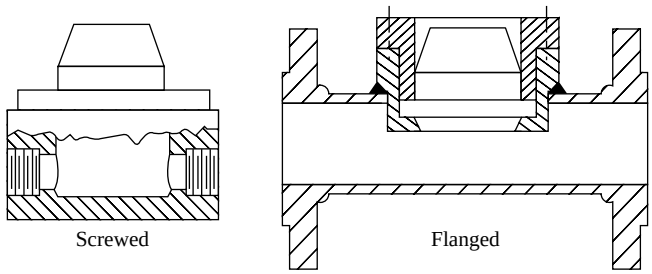

FIG. 5.2f
In-line chemical seals.

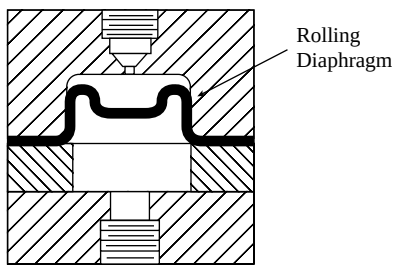

FIG. 5.2g
Large displacement seal.

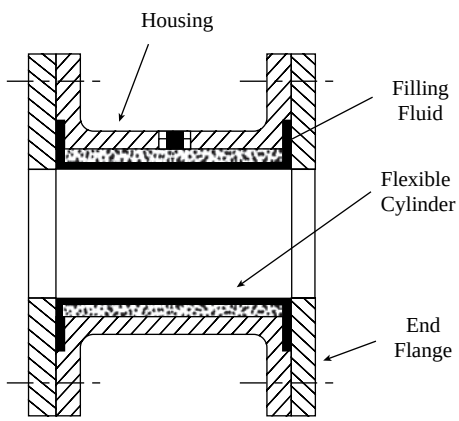

FIG. 5.2h
Full-stream spool seal.

Self-Cleaning Seals

When plugging or material buildup is a very serious consideration, even the in-line seals shown in Figure 5.2f will not give satisfactory performance, and it is necessary to eliminate all cavities completely. This is achieved with the full-stream seal shown in Figure 5.2h. The three main components

© 2003 by Béla Lipták

of this seal are the flexible cylinder, the cast iron housing, and the end flanges. The space between the flexible sleeve and the housing is filled with the sensing fluid. The sleeve is available in neoprene, gum rubber, butyl, hypalon, ethylene propylene terpolymer, or Teflon, and the end flanges can be of stainless steel or other metals compatible with the process. This design eliminates all cavities and is applicable to low and medium pressure applications up to 200 PSIG (1.4 MPa).

These self-cleaning seals are also available in the wafer design, which can be inserted between 1 to 48 in. (25 mm to 1.22 m) flanges and can take up to 20,000 PSIG (138 MPa) pressure in the smaller sizes. For smaller pipelines, threaded units made out of steel, stainless steel, aluminum, or polyvinyl chloride can be obtained down to 0.5 in. (13 mm) connection size.

Volumetric Seal Elements

Figure 5.2i shows a number of volumetric seal designs, all of them consisting of a flexible member, a housing, and filling liquid to transmit the process pressure to the pressure instrument through a capillary tubing. Each of these devices serves to minimize or eliminate cavities. In the diaphragm units, there is a definite relationship between the process pressure to be detected and the required diaphragm area. Extended or wafer elements with greater than 2 in. (50 mm) diameter diaphragm surface areas can handle pressure spans from 0–50 to 0–1000 PSIG (0–350 kPa to 0–6.9 MPa).

The small button diaphragm designs will work with a minimum span of a few hundred pounds per square inch and can handle ranges up to 10,000 PSIG (69 MPa) or greater. The bellows design is more sensitive than the same diameter button diaphragm and can handle spans from 75 to 1,000 PSIG (0.5 to 6.9 MPa). This element, having flexibility in both directions, is more applicable to compound pressure applications than the other elements. The tube seal element is applicable to spans between 1,000 and 5,000 PSI (6.9 and 35 MPa).

The earlier discussion of chemical seal fill fluids, temperature effects, and spans also applies to volumetric elements. The construction materials for these units are more limited than those for standard seals. Stainless steel is the standard material for wetted parts, but more corrosion-resistant materials are also available. Liquid-filled, extended diaphragm seals can be obtained with extension lengths and diameters as needed to bring the diaphragm surface flush with the inside of the pipe or tank on which the seal is installed.

There may be applications where the requirements for low-pressure span, vacuum service, or process temperature considerations would make the liquid-filled seals undesirable but in which dead-ended cavities cannot be tolerated. If so, the extended diaphragm differential pressure cells discussed in Section 5.6 or the extended diaphragm pressure repeaters covered in Section 5.12 can be considered.

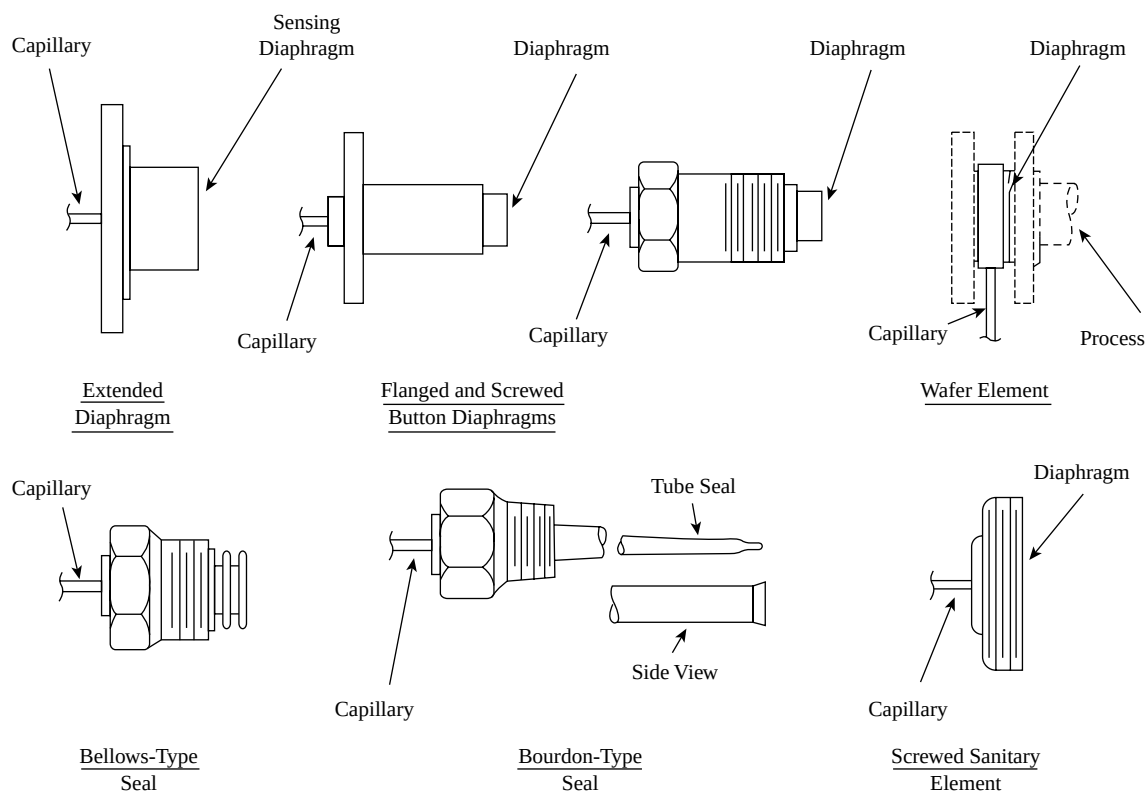

FIG. 5.2i
Volumetric seal elements.

© 2003 by Béla Lipták

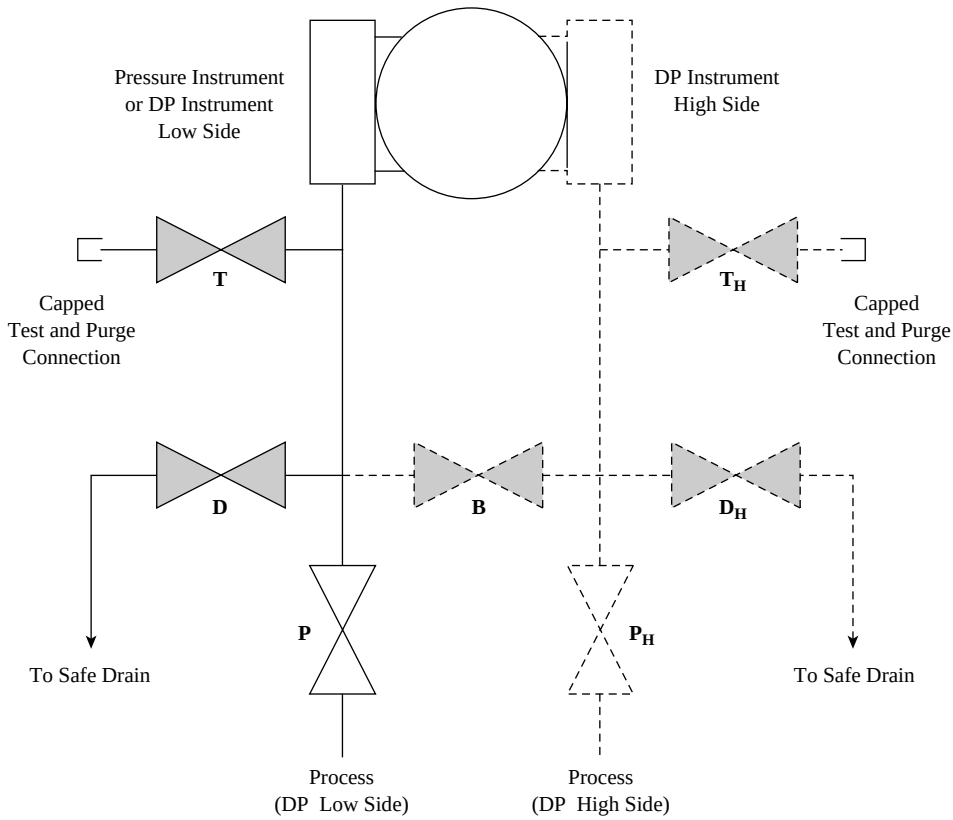

FIG. 5.2j
Valve manifold arrangements used for safe maintenance, draining, and calibration of pressure instruments.

VALVE MANIFOLDS

Valve manifolds serve to simplify periodic calibration of pressure instruments. They can also allow the calibration, and even instrument replacement, during continued operation. This is particularly important for processes that rarely shut down, such as in power plants. Because the process fluids may be toxic, corrosive, radioactive, or otherwise noxious to personnel or the environment, it is necessary to protect against the release of these fluids during calibration.

A three-valve manifold, such as that shown by the solid lines in Figure 5.2j, may be used to serve this purpose. Valve P is used to isolate the process, D is the drain valve which discharges the process fluid from the instrument to a safe containment, and T can be used to flush any trapped fluid to the drain and to apply the calibration or test pressure. When applied to each side of a differential pressure instrument, as shown by P_H, D_H, T_H, and the dashed lines, a bypass valve, B, is usually added. This can result in a seven-valve manifold. Proper operation of the valves (shut the high side process valve P_H then open the bypass B) allows verification of the instrument zero at actual operating pressure.

For pressure instruments with dual connections (the unused connection plugged), the valves T and T_H (or D and D_H) may be connected as individual valves in place of the plug in the otherwise unused connections. This permits flow-through purging of noxious fluids from the instrument. For a relatively low pressure system containing benign fluids, test valves and/or drain valves are often eliminated in favor of a simple straight-thread cap that can be safely loosened to relieve a drop or two residual fluid pressure and serve as the calibration connection. In the extreme, this results in a single valve and test tee. However, the most common choices of manufactured manifolds are the two-, three-, and five-valve arrangements.

With all the valves and connections preassembled into a manufactured manifold, space and field assembly time are saved and the chances for leaks are reduced. Manifolds are available to bolt directly to standard instruments in place of their normal flanged adapters and may be provided preassembled to the instrument.

CALIBRATIONS AND COMMUNICATORS

The dead-weight-type pressure testers and calibrators are described in Section 5.8. Portable, hand-held electronic pressure calibrators are also available. These units are provided with National Institute of Standards and Technology (NIST) traceable pressure readouts with inaccuracies of 0.1% of reading or better. For lower pressures (from a few inches of

© 2003 by Béla Lipták

water to 200 PSIG, or 14 bars), these calibrators can be provided with a small hand pump to provide a pressure source for calibration. Some models can store several sets of configuration data and the calibration procedures for each. Calibration data can be captured and stored for later trending or uploading to a personal computer (PC) or network server. One of the many capabilities of these calibrators is instant conversion between various systems of units.

The smart transmitters (see Section 5.1) can also be provided with digital indication and with memory for trending or record keeping. When integrated into a network or into a distributed control system, (DCS), PC-, or programmable logic controller-operated system, the calibration steps and the use of stored specifications can all be automated. The calibrator/communicator units range from the palm-sized through the suitcase-sized up to the rollaround packages. Most provide storage of multiple device protocol libraries so that communication is possible with almost any manufacturer's transmitter. Some of the protocols in use, and their year of introduction, include ARCNet (1975), WorldFIP (1988), Highway Addressable Remote Transducer (HART) (1989), Foundation Fieldbus H1, (1995), and Profinet (2001).

Smart, microprocessor-based transmitters can be provided with communicators that are integral to, or separate from, the electronic calibration unit. These communication units allow the operator to modify zeroes or spans, change units, or verify the current values. If a PID algorithm is included in the smart transmitter, the communicator can be used to modify its setpoint or tuning values. Where transmitters are networked into a DCS system, it is not necessary to go to the transmitter to communicate with it. In such installations the individual transmitter can be accessed from the control room or engineer's desk through the data highway.

Establishment of an industry-wide communication protocol for digital control systems (similar to the 3 to 15 PSIG [0.2 to 1.0 bar] or the 4–20 mA DC signal ranges that have been developed and accepted worldwide for analog control) still eludes consensus. Nevertheless, sufficient digital bridges and adapters are available so that a completely digital instrumentation system is likely to be possible in any particular plant or system. Also, there are now at least two wireless local area network communication standards—"Bluetooth" and IEEE-802.11b—that may be useful and appropriate for some installations.

Bibliography

Bailey, S.J., "Sensing Art Challenges Old Technology," *Control Engineering*, January 1987.

Comber, T. and Hackman, P., "Pressure Monitoring: What's Happening?" *Instruments and Control Systems*, April 1980.

"Cost Saving 'Enablers' Speed Networking" *Industrial Computing*, October 2001 (www.isa.org/journals/ic).

Ferree, S.R., "Sensors: Simple to Smart to Systems," *InTech*, November 1991.

Harland, P.W., *Pressure Gage Handbook*, New York: Marcel Dekker, 1985.

"Improved Online Calibration" *InTech*, December 7, 2001

Instrumentation, Systems, and Automation Society, "Industrial Measurement Series: Pressure" (video), 2002.

Krell, G.H., "Sensing Pressure through Diaphragms," *Chemical Engineering*, July 1, 1968.

Reed, C.J., "How to Refill Chemical Seals," *Instruments Technology*, February 1971.

"Step-Shaped Diaphragm Seal Reduces Temperature Error," *Control*, March 2000.

Sydenham P.H., Thorn R., *Handbook of Measurement Science*: Elements of Change, Vol. 3, New York: John Wiley & Sons, September 1992.

"Tracking the Future of Communications," *Worldbus Journal Supplement to InTech*, Instrumentation, Systems, and Automation Society, Research Triangle Park, NC, October 2001.

"Wireless Control? OK, if 'Slow' and Not Critical," *Worldbus Journal Supplement to InTech*, Instrumentation, Systems, and Automation Society, Research Triangle Park, NC, April 2002.

© 2003 by Béla Lipták

5.3 Bellows-Type Pressure Sensors

B. G. LIPTÁK (1969, 1982, 1995) **J. E. JAMISON, S. EDVI** (2003)

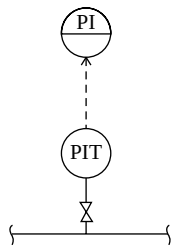

Flow Sheet Symbol

Applications:	Bellows-type sensing elements are for low to intermediate pressures and vacuums with atmospheric (compound) or vacuum (absolute) reference. They are also used in differential pressure applications, which are discussed in Section 5.6.
Design Pressure:	Up to 25 PSIG (172 kPa) with evacuated motion balance type bellows; up to 375 PSIG (2.6 MPa) with evacuated force balance bellows; up to 100 PSIG (690 kPa) with motion balance bellows, which are provided with atmospheric reference; up to 6000 PSIG (41 MPa) with dual bellows element; up to 4000 PSIG (27 MPa) with atmospheric reference force balance bellows.
Design Temperature:	Up to 212°F (100°C) with brass bellows
Materials of Construction:	Brass, stainless steel, beryllium copper, Monel, bronze, copper, Inconel, Ni-Span
Range:	Absolute pressure ranges from 0 to 0.326 PSIA (0 to 2.5 kPa); also, 0–100 mmHg to 0–35 PSIA (0–13 to 0–240 kPa); gauge pressure ranges from 0–2.5 in. H_2O to 0–2000 PSIG (0–0.65 kPa to 0–14 MPa); gauge vacuum ranges are available from –0.326 to 0 PSIG (–2.5 to 0 kPa); compound ranges are available from –0.196 to 0.13 PSIG (–1.5 to 1.0 kPa).
Inaccuracy:	±0.1 to ±2% of span. Standard indicators, recorders, and switches are less accurate than this sensor and the combined loop error therefore increases. Intelligent transmitters contribute the least error.
Costs:	$150 to $500 for indicators and switches; $400 to $1200 for direct recorders; $800 to $2000 for direct controllers and transmitters
Partial List of Suppliers:	ABB Process Automation (formerly Kent-Taylor) (www.abb.com) Bailey, a Division of ABB (www.abb.com) Barton Instruments Systems (www.barton-instruments.com) Dwyer Instruments Inc. (www.dwyer-inst.com) Fischer & Porter, a Unit of ABB (www.abb.com/us) The Foxboro Co. (www.foxboro.com) Honeywell Inc. (www.honeywell.com) Moore Products, now part of Siemens Inc. (www.sea.siemens.com) Nuova-Fima (Italian gauge company) (www.nuovafima.com) Rosemount Inc. (a Div. of Emerson Process Management) (www.rosemount.com) Siemens Moore Automation Solutions (www.moore-solutions.com) Validyne Engineering Corp. (www.validyne.com) Yokogawa Corp. of America (www.yca.com)

INTRODUCTION

Bellows are formed from seamless tubes that are hydraulically or mechanically roll-formed. Seamless bellows are made of brass beryllium copper, phosphor bronze, Monel, Inconel, and stainless steel. Bellows can also be manufactured by welding a number of preformed plates together. Welded bellows are made from stainless steel, Ni-Span C, Monel, and Inconel-X. The main advantages of bellows (relative to diaphragm capsules) are their ability to provide

© 2003 by Béla Lipták

longer strokes and to handle higher forces. They are therefore, well suited as direct input elements into recorders and indicators. Their sensitivity increases with their diameter, which can be as large as 6 in. (150 mm). Bellows are noted for their good linearity and are generally used in the ranges from 0 to 2.5 in. H_2O and 0 to 10 PSI (0–6 to 0–1000 mbar).

Their limitations include their sensitivity to ambient temperature effects, work hardening, drift, friction, and elastic hysteresis. In most cases the elastic action of the bellows is insufficient for accurate measurement, and a spring needs to be added to precisely characterize the relationship between force and movement.

BASIC DESIGNS

Four basic designs of bellows pressure detectors will be discussed. They are classified by the reference pressure used as absolute, gauge, or differential pressure detectors, and can also be grouped as force or motion balance types depending on the instrument design. Direct local indication is available only with motion balance units, while force balance sensors are more accurate. In addition, bellows manostats (self-contained vacuum controllers) are also described in Section 5.14.

Absolute Pressure Sensors

When absolute pressure is to be sensed with bellows elements, it normally involves two bellows, one for measuring and the other for reference. The compensating (reference) element is fully evacuated and sealed, while the sensing element is connected to the process.

Motion Balance Figure 5.3a illustrates the beam balance version of this design, and Figure 5.3b shows the opposed bellows design. In either arrangement, an increase in process pressure will cause the measuring bellows to extend, which results in an increase of readout through the motion balance mechanism. If the process pressure is constant but the barometric pressure changes, force will be exerted equally on the outside of both bellows, causing no change in the readout. The evacuated bellows are capable of compensating for barometric pressure variations as high as 100 mmHg (200 kPa).

Dual bellows detectors are available with spans from 0–100 mmHg to 0–30 PSIA (0–13 to 0–200 kPa). The elements can be exposed to overpressures up to 35 PSIA (240 kPa). These motion balance absolute pressure sensors are inaccurate to ±1% of full scale and, therefore, can give reasonably reliable measurement of absolute pressures down to approximately 5 mmHg (0.7 kPa).

Force Balance The force balance detector shown in Figure 5.3c is available as a pneumatic or electronic transmitter, but not as a direct indicator because there is no motion to drive a pointer. For local indication, an output gauge can be installed.

Because the force balance transmitter mechanism is illustrated in Figure 5.6e, it has not been repeated in Figure 5.3c. The pressure being sensed is applied to the inside of the bellows within the capsule. The space on the outside of the bellows is evacuated, thus providing a zero absolute pressure reference. The process pressure exerts a force on the capsule that is applied to the lower end of the force bar. Due to the force balance nature of the unit, the force bar is constantly

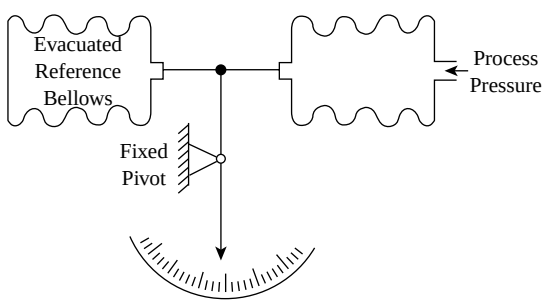

FIG. 5.3b
Opposed bellows detector.

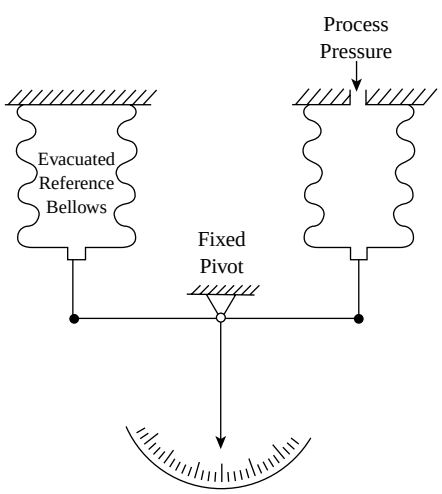

FIG. 5.3a
Beam balance bellows sensor.

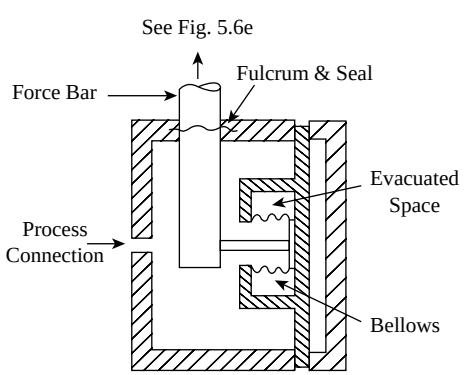

FIG. 5.3c
Force balance absolute pressure sensor.

© 2003 by Béla Lipták

balanced; the sensing bellows do not move as long as the pressure detected is within the range of the instrument. If the range of the capsule is exceeded, the bellows extend to the right where they are supported by the capsule backup plate.

The standard material for construction of this instrument is stainless steel. The inaccuracy is between 1/4 and 1/2% of span. The minimum span for this unit is 25 PSIA (170 kPa) and the maximum is 250 PSIA (1700 kPa). These spans are adjustable within the 0 to 350 PSIA (0 to 2.4 MPa) range limits of the capsule. The unit will withstand a maximum pressure overrange of 375 PSIG (2.6 MPa). The ambient temperature limits on this device are from –40 to 250°F (–40 to 120°C).

Atmospheric Reference Sensors

When bellows are used as the pressure-sensing element, it is desirable to add a spring for ranging and accurate characterization. Without the calibration spring, temperature effects and work hardening of the bellows would cause a loss of accuracy. The bellows are either brass or stainless steel, and the calibration spring is Ni-Span C, which ensures uniform motion throughout the range with practically no change due to ambient temperature variations.

Motion Balance Figures 5.3d and 5.3e illustrate designs using single-bellows elements. In both designs, the inside of the bellows is open to atmosphere, which represents the pressure reference, and the outside is exposed to the process pressure. The differences in the two designs involve only the location of the calibration springs and the method applied in transmitting bellows motion to the readout pointer.

The spring-loaded metallic bellows are compressed by the process pressure, which is forcing the lower end of the bellows upward against the opposing force of the spring. This vertical movement is transmitted through suitable linkage or a torque tube assembly to the pointer. These units can also act as differential pressure detectors if the inside of the bellows is connected to a process pressure instead of being open to the atmosphere.

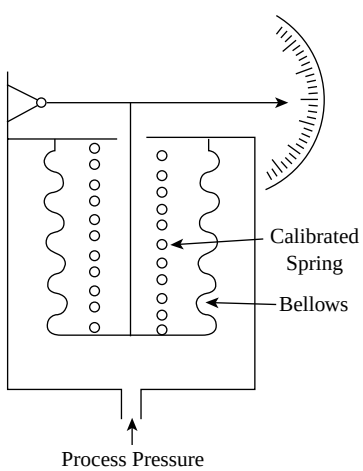

FIG. 5.3d
Bellows sensor with calibrated spring.

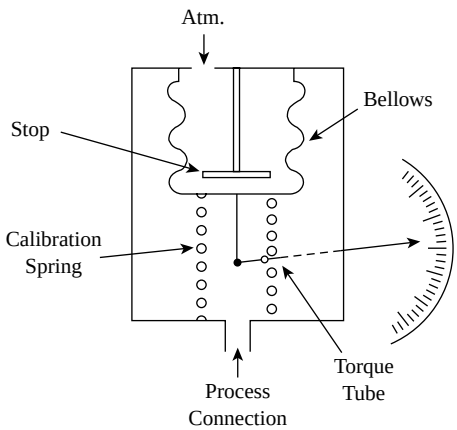

FIG. 5.3e
Bellows detector with calibration spring.

TABLE 5.3f
Minimum and Maximum Spans of Standard Bellows

Type of Bellows	*Minimum Span*	*Maximum Span*
Large diameter brass	0–5 in. H_2O (0–127 mm H_2O)	0–90 in. H_2O (0–22.3 kPa)
Small diameter brass	0–90 in. H_2O (0–22.3 kPa)	0–450 in. H_2O (0–111 kPa)
Small diameter stainless steel	0–15 PSIG (0–103 kPa)	0–40 PSIG (0–276 kPa)

Single Bellows The spans of the single-bellows element vary with the diameter and construction materials of the bellows. Table 5.3f lists the span ranges of some standard bellows elements. By selecting the appropriate spring for the application, the sensor bellows can detect positive, vacuum, or compound ranges as a function of the location of the atmospheric pressure reference. The inaccuracy of these units is between 1/2 and 2% of span depending on their design and calibration. Their overpressure limitation varies from 25 to 100 PSIG (170 to 690 kPa).

Dual Bellows Dual-bellows elements (Figure 5.3g) are also available as differential pressure sensors. These differential pressure (d/p) elements will be discussed in detail in Section 5.6 (see Figure 5.6c). If either the low- or the high-pressure side is left open to the atmosphere, the unit will detect either gauge pressure or vacuum. The various features and operating principles of this d/p instrument will not be repeated here, but Table 5.3h does give a summary of their available sizes and their corresponding minimum and maximum spans.

These instruments can be designed for overpressures up to 6000 PSIG (41 MPa), can operate between –60 and 200°F (–50 and 93°C) temperature, and are inaccurate to 1/2 to 1%

© 2003 by Béla Lipták

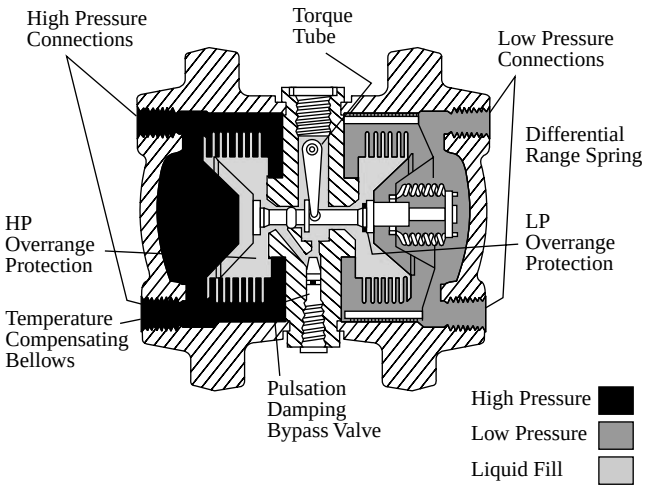

FIG. 5.3g
Differential pressure sensors can be used to detect gauge pressures by leaving the low-pressure side open to atmosphere or can be used to detect vacuums by leaving the high-pressure side open. (Courtesy of Siemens-Moore Automation Solutions.)

TABLE 5.3h
Standard Sizes of Stainless Steel Bellows and Their Corresponding Minimum and Maximum Spans

Type of Bellows (Stainless Steel)	*Minimum Span*	*Maximum Span*
3¾ in. diameter	0–20 in. H_2O (0–5 kPa)	0–400 in. H_2O (0–99 kPa)
2⅛ in. diameter	0–15 PSI (0–103 kPa)	0–50 PSI (0–345 kPa)
1⅝ in. diameter	0–30 in. H_2O (0–7.4 kPa)	0–35 PSI (0–241 kPa)
¾ in. diameter	0–35 PSI (0–241 kPa)	0–400 PSI (0–2758 kPa)

of span. The torque tube shaft in this unit can drive local indicators, recorders, controllers, switches, or transmitters.

Force Balance Figures 5.3i and 5.3j illustrate two gauge pressure sensors of the force balance variety. When relatively low pressures need to the measured, the process pressure is introduced into the inside of the bellows, while for higher pressures, the outside surface of the bellows is exposed to the process pressure. The force of the process pressure is applied to the lower end of the force bar. Due to the force balance nature of the unit, the force bar is constantly balanced; therefore, the sensing bellows do not move as long as the pressure detected is within the range of the instrument.

Because the force balance units do not have enough motion to drive an indicator pointer, they are available only as transmitters (see Figure 5.6e). The bellows are available in brass, stainless steel, or Monel, and inaccuracies are between

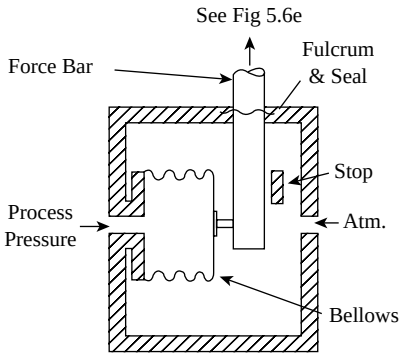

FIG. 5.3i
Force balance low-gauge pressure sensor.

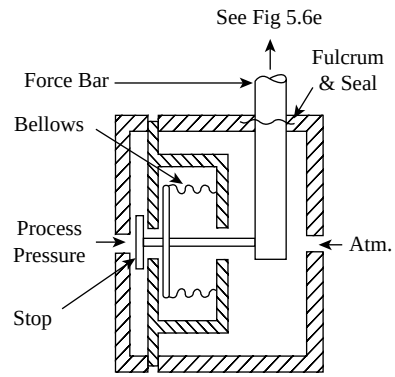

FIG. 5.3j
Force balance gauge pressure detector.

TABLE 5.3k
Sizes of Force Balance Bellows and Their Corresponding Minimum and Maximum Spans

Type of Bellows	*Minimum Span*	*Maximum Span*	*Overpressure Limit*
Low-Pressure Bellows	0–10 PSI	0–60 PSI	100 PSIG
½ in. diameter	0–25 PSI	0–250 PSI	500 PSIG
⅜ in. diameter	0–50 PSI	0–500 PSI	1000 PSIG
¼ in. diameter	0–100 PSI	0–1000 PSI	2000 PSIG
11⁄64 in. diameter	0–200 PSI	0–2000 PSI	4000 PSIG

±1/4 and 1/2% of span. Table 5.3k lists the spans and overpressures for some of the standard bellows elements (1 PSI = 6.9 kPa), as well as some of their sizes and spans.

Bibliography

Babichev, G.G., Kozlovskiy, S.I., Romanov, V.A., and Sharan, N.N., "Pressure Transducers with Frequency Output on the Base of Strain-Sensitive Unijunction Transistors," Paper 2.31, 1st IEEE International Conference on Sensors, (IEEE Sensors 2002), Orlando, FL, June 2002.

© 2003 by Béla Lipták

Bailey, S.J., "Pressure Sensors and Transmitters Affected by Technological Change," *Control Engineering*, January 1984.

von Beckerath, A., Eberlein, A., Julien, H., Kerstein, P., and Kreutzer, J., *WIKA Handbook on Pressure and Temperature Measurement*, U.S. ed., Lawrenceville, GA: Wika Instrument Corp., 1998.

Brombacher, W.G., "40 Years of Pressure Measurement," *Instruments and Control Systems*, September 1967.

Buckon, L.,"Considerations in Selecting a Pressure Calibration Device," Paper #91–0449, Instrumentation, Systems, and Automation Society Conference, Toronto, 1991.

Comber, J. and Hockman, P., "Pressure Monitoring: What's Happening?" *Instruments and Control Systems*, April 1980.

Dyer, S.A., *Wiley Survey of Instrumentation and Measurement*, New York: John Wiley & Sons, 2001.

Elliott, T.C., "Temperature, Pressure, Level, Flow: Key Measurements in Power and Process," *Power*, September 1975.

Faust, E., "Pressure Calibration Standards: How Accurate Should They Be?" *Hydrocarbon Processing*, January 1994.

"Gas Purged D/P Transmitters," *InTech*, November 1992.

Gillum, D., "Industrial Pressure, Level, and Density Measurement," Research Triangle Park, NC: ISA Press, 1995.

Hall, J., "Monitoring Pressure with Newer Technologies," *Instruments and Control Systems*, April 1979.

Hughes, T.A., "Pressure Measurement," EMC series, downloadable PDF, Instrumentation, Systems, and Automation Society, Research Triangle Park, NC, 2002.

Instrumentation, Systems, and Automation Society, Industrial Measurement Series: Pressure (video VHS, PAL & NTSC), Research Triangle Park, NC, 2002.

Instrumentation, Systems, and Automation Society, "Pressure: Indicators and Transmitters," CD-ROM, Research Triangle Park, NC, 2002.

Johnson, D., Pressure Sensing: It's Everywhere, *Control Engineering*, April 2001.

Marrano, S.J., "How to Choose and Apply Pressure Transmitters," *Control*, March 2000.

"Pressure Systems," *Chemical Engineering*, January 29, 1968.

"Step-Shaped Diaphragm Seal Reduces Temperature Error," *Control*, March 2000.

© 2003 by Béla Lipták

5.4 Bourdon and Helical Pressure Sensors

B. G. LIPTÁK (1969, 1982, 1995) **J. E. JAMISON, S. EDVI** (2003)

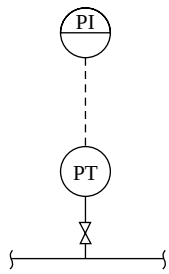

Flow Sheet Symbol

Applications:	Sensing elements for the measurements of medium to high pressures using atmospheric reference. For pressure gauges and switches using these elements, see the corresponding sections in this chapter.
Design Pressure:	Up to 100,000 PSIG (690 MPa)
Design Temperature:	Up to 600°F (316°C) with stainless steel Bourdon tube; lower with others; ±1% zero shift per 50°F (28°C) ambient variation
Materials of Construction:	Phosphor bronze, alloy steel, 316 and 403 stainless steel, beryllium copper, Monel, Ni-Span C
Inaccuracy:	1/4 to 5% of span
Range:	Minimum span 15 PSI (100 kPa); maximum span 100,000 PSI (690 MPa)
Costs:	$50 to $300 for indicators and switches, $500 to $1,200 for direct recorders, and $750 to $1,800 for direct controllers and transmitters. Quartz helix units range for $2,500 for an electronic transmitter to $18,000 for an IEEE and RS-232 programmable, stable-alone station.
Partial List of Suppliers:	ABB Automation Technology (formerly Kent-Taylor) (www.abb.com) Ametek Inc., U.S. Gauge Div. (www.ametekusg.com) Anderson Instrument Co. Inc. (www.andersoninstrumentco.com) Bailey, a Unit of ABB (www.abb.com) Barton Instruments Systems (www.barton-instruments.com) Circle Seal Controls Inc. (www.circle-seal.com) Dresser Industries, Instrument Div. (www.dresserinstruments.com) Dwyer Instruments Inc. (www.dwyer-inst.com) Helicoid Instruments Div. of Bristol Babcock (www.bristolbabcock.com) Fischer & Porter, a Unit of ABB (www.abb.com) Fisher Controls Int., a Div. of Emerson Process Management (www.emersonprocess.com) The Foxboro Co. (www.foxboro.com) Honeywell Inc. (www.honeywell.com) Marsh Instrument Co. (www.marshbellofram.com) Marshalltown Instruments Inc. (www.marshbellofram.com) Mensor Corp. (quartz helix) (www.e-pressure.com) Mid-West Instrument (www.midwestinstrument.com) Moeller Instrument Co. (www.moellerinstrument.com) Moore Products, now part of Siemens Inc. (www.sea.siemens.com) Noshok Inc. (www.noshok.com) OCI Instruments Inc. (www.ociinstruments.com) Palmer Instruments Inc. (www.palmerinstruments.com) Perma-Cal Corp. (www.perma-cal.com)

© 2003 by Béla Lipták

Ruska Instrument Corp. (quartz helix) (www.ruska.com)
Rosemount Inc., a Div. of Emerson Process Management (www.emersonprocess.com)
Span Instruments Inc.
Techscience International
Texas Instruments (quartz helix)
H.O. Trerice Co. (www.hotrerice.com)
Validyne Engineering Corp. (www.validyne.com)
Wallace & Tiernan Inc. (www.usfwt.com)
Weiss Instruments Inc. (www.weissinstruments.com)
Weksler Instruments Corp. (www.dresserinstruments.com)
Wika Instrument Corp. (www.wika.com)
Yokogawa Corp. of America (www.yca.com)

In 1852, E. Bourdon patented a curved or twisted tube that if held and pressurized at its open end, produced movement at its closed end (tip travel).

THE BOURDON TUBE

Bourdon tube-type pressure elements are used to detect higher pressures (spans exceeding 30 PSI, or 200 kPa), because their spring gradient is insufficient for detecting lower pressures or vacuums. Bourdon tubes are manufactured in C, helical, and spiral forms (see Fig. 5.4a). The C-Bourdon element is made by winding a tubular element circularly to form a segment of a circle, the helical element is made by winding the tube several turns into a helix, and the spiral is formed by winding two or three turns in a spiral around the same axis. In each of these cases the circular cross section of the tube is flattened. When these elements are pressurized, their cross section tends to become more circular, which tends to straighten their shape (see Figure 5.4b). Helical and spiral elements are used when it is desired to reduce the stress in the tube and to increase the tip movement.

The design of Bourdon tubes is based on empirical equations and practical observations. The tubes can be made from strain-hardened alloys (brass, bronze, 304 and 316 stainless steel, or Monel), from heat-treated alloys (403, 4130, or 8630 stainless steel), and from precipitation-hardened alloys (beryllium copper, Inconel X, Ni-Span C, and K Monel). Some of the more desirable features of the Bourdon tube elements include their fast speed of response (usually 0.1 s full scale) and good sensitivity (0.01% of maximum pressure when unrestrained). Their limitations include a nonlinearity of about 0.5% full scale, which can be compensated mechanically or electronically; a 0.2 to 0.5% hysteresis on cycling pressures, which can be minimized by heat treatment; and a sensitivity to temperature variations, which can be reduced by the use of bimetallic compensators or by the use of element materials (Ni-Span C) having moduluses of elasticity that are insensitive to temperature variations.

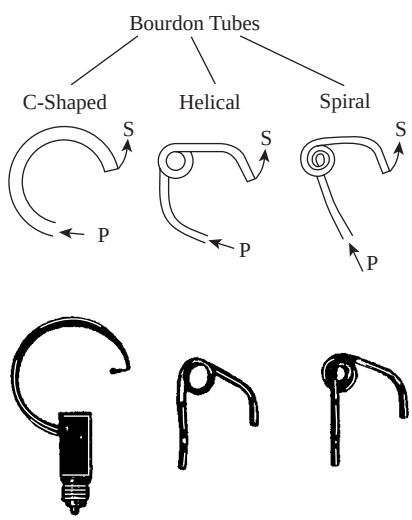

FIG. 5.4a
The main types of flexible measuring elements. (Courtesy of WIKA Instrument Corporation.)

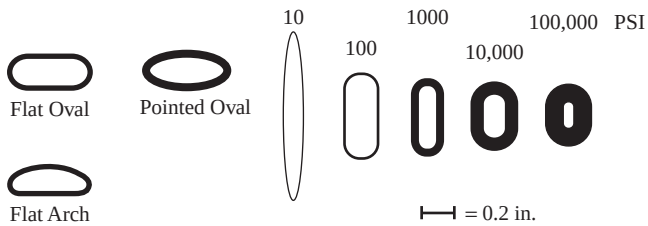

FIG. 5.4b
Cross-sections of Bourdon tubes for various pressure ranges. (Courtesy of WIKA Instrument Corporation.)

C-Bourdon Pressure Sensors

Figure 5.4c illustrates a C-Bourdon tube used in direct indicating gauges, which usually have an arc of 270 degrees. The process pressure is connected to the tube support end of the tube, while the tip end is sealed. Because of the difference between inside and outside radii, the Bourdon tube presents different areas to pressure, which causes the tube to tend to straighten when pressure is applied.

The resulting tip motion is nonlinear because less motion results from each increment of additional pressure. This nonlinear motion has to be converted to linear rotational pointer response. This is done mechanically by means of a geared sector and pinion movement. The tip motion is transferred to the tail of the movement sector by the connector link. The angle between the connecting link and the sector tail is called

© 2003 by Béla Lipták

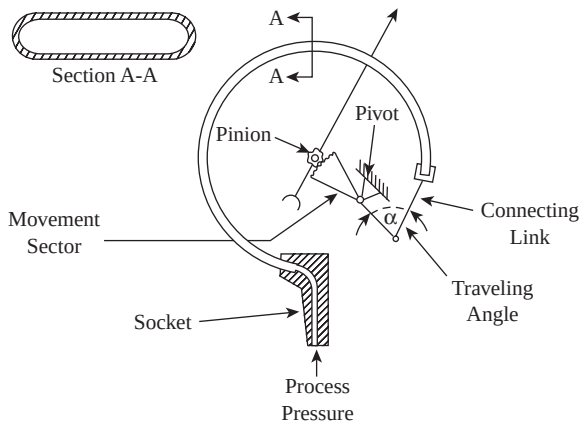

FIG. 5.4c
Pressure gauge with C-Bourdon pressure element.

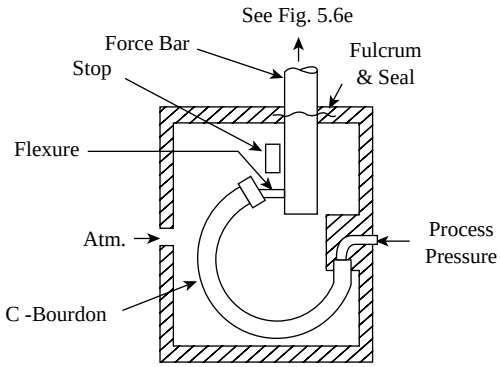

FIG. 5.4e
Force balance C-Bourdon pressure sensor.

the traveling angle. This angle changes with tip movement in a nonlinear fashion, compensating for the nonlinearity of the tip movement. It is designed to minimize backlash and provide smooth roll-on and roll-off characteristics in the geared sector. It is also designed to provide pinion movement by using fine pitch gears or by eliminating the gears altogether and using a cam sector that positions on a roller surface.

This design eliminates the gears that eventually wear out and reduces the play that occurs when teeth are worn. On gear and pinion designs, the operation has been improved by the use of nylon and Teflon materials.

Table 5.4d lists Bourdon tube materials, noting some of the important characteristics by the letters P (poor), F (fair), G (good) and also indicating the maximum pressure range that the Bourdon tube can detect.

As stated in Table 5.4d, Ni-Span C seamless tubing, drawn to the profile in Figure 5.4c, is the best choice for Bourdon tube applications in all cases except those at very high pressure or those that are extremely corrosive. Direct indicators or motion balance transmitters using C-Bourdon elements are available with spans from 0–15 PSI to 0–20,000 PSI (0–100 kPa to 0–140 MPa) and can be used for positive, negative, or compound pressure ranges, but the indication on the vacuum side will not be accurate or sensitive. The accuracy of these devices is a function of the Bourdon tube diameter, design quality, and calibration procedures. It can vary from ±0.1 to ±5% inaccuracy, with the majority of these units failing in the area of ±1% (Table 5.11f).

The quality of C-Bourdon measurement can be influenced by several factors. The large overhang in the element makes it susceptible to shock or vibration. If a Bourdon element has been calibrated on air and in the process it is filled with liquid, weight of the fluid in the overhang will introduce an error. In some applications, the tubes will need to be flushed, for which purpose tube tip bleed valves are available. On liquid service, air is likely to be trapped in the tube end, which acts as a cushion and results in sluggish performance. Bourdon designs are available with an internal capillary tube that allows entrapped air to escape from the tip.

Figure 5.4e illustrates the design that uses a C-Bourdon element in a force balance transmitter. (See Figure 5.6e for a more detailed view of a force balance transmitter mechanism.) The pressure applied to the Bourdon tube tends to straighten it and move its tip to the left. The flexure transmits the resulting force to the lower end of the force bar.

Due to the force balance nature of the unit, the force bar is constantly balanced; the sensing Bourdon does not move as long as the pressure sensed is within the range of the instrument. If the range is exceeded, the lower end of the force bar moves to the left, where it is supported by a limit stop.

TABLE 5.4d
Pressure Ranges and Other Characteristics of the Different Bourdon Tube Materials (1 PSI = 6.9 kPa = 0.069 bars)

Tube Material	*Corrosion*	*Spring Rate*	*Temp. Coefficient*	*Hysteresis*	*Maximum Pressure*
Phosphorus bronze	P	F	P	F	800 PSIG
Beryllium copper	P	G	P	G	5000 PSIG
316 Stainless steel	G	P	P	P	10,000 PSIG
403 Stainless steel	G	P	P	P	20,000 PSIG
Ni-Span C	G	G	G	G	12,000 PSIG
K-Monel	G	P	P	P	20,000 PSIG

P = poor; F = fair; G = good.

© 2003 by Béla Lipták

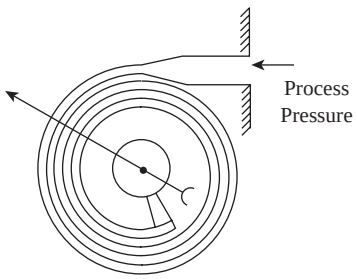

FIG. 5.4f
Spiral Bourdon element.

The Bourdon tube is made of Ni-Span C, and all other wetted components are stainless steel. Available spans vary from 1000 to 12,000 PSI (6.9 to 83 MPa) with 150% overrange protection. The inaccuracy of this transmitter is ±0.5% in the lower and ±1% in the higher ranges. Maximum ambient temperature is limited to 250°F (120°C).

Spiral Bourdon Pressure Sensors

The free end motion of the C-Bourdon tube is insufficient to operate some of the motion balance devices, such as the transmitters. The spiral element shown in Figure 5.4f is essentially a series of C-Bourdon tubes joined end to end. When pressure is applied, this flat spiral tends to uncoil and produces a greater movement of the free end, requiring no mechanical amplification. This increases the sensitivity and accuracy of the instrument because no lost motion or friction is introduced through the links and levers.

Standard spiral materials include bronze, steel, stainless steel, beryllium copper, Monel, and Ni-Span C. Spans as low as 10 PSI (69 kPa) are available for positive, negative, or compound ranges. The various manufacturers use different break points between the spiral and the helical elements. Some start using helical elements at above 200 PSI (1.4 MPa) spans; others stay with the spiral element up to 4,000 PSI (27 MPa) and higher. Unflattened, heavy-wall, spiral tube springs that detect pressures up to 100,000 PSIG (690 MPa) are also available in direct indicators.

Figure 5.4g is a simplified illustration of an old, pneumatic motion balance transmitter operated by a spiral element. While the flapper is substituted with an electronic motion sensor in the majority of today's pressure transmitters, the nature of the sensor's operation has not changed. The sketch would also apply if the process pressure was detected by a C-Bourdon or a helical element.

In this unit, the air supply passes through a restriction before being applied to the top of the relay diaphragm and the nozzle. An increase in process pressure tends to straighten out the spiral, which causes the flapper to move closer to the nozzle. This increases the nozzle back pressure sensed by the relay diaphragm, which will move down, opening up the air supply to the output. The increased output pressure is felt by the feedback bellows and restores the flapper to its throttling

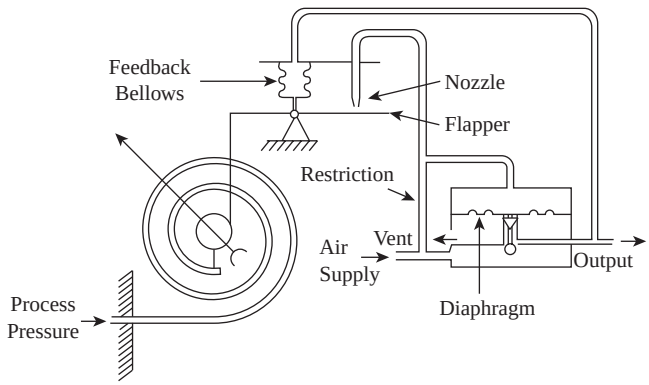

FIG. 5.4g
Motion balance pressure transmitter with spiral element.

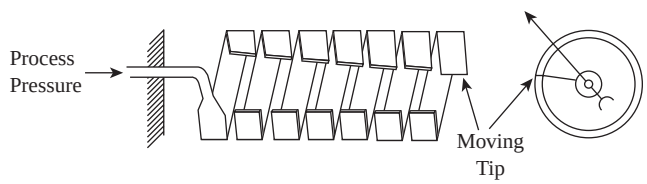

FIG. 5.4h
Helical Bourdon pressure sensor.

position. For each value of process pressure there is a corresponding definite flapper position and output pressure, hence, the name motion balance. The inaccuracy of these motion balance pressure transmitters is generally placed at ±0.5%. As shown in Figure 5.4g, they will read the process pressure even if the air supply is lost.

Helical Bourdon Pressure Sensors

Figure 5.4h shows the construction of a helical Bourdon element. This sensor produces an even greater motion of the free end than the spiral element, eliminating the need for mechanical amplification.

Other advantages of this design include the high overrange protection available. For example, a 0 to 1,000 PSIG (0 to 6.9 MPa) element may be safely exposed to 10,000 PSIG (69 MPa) pressure, and it is suitable for pressure measurement on continuously fluctuating services. The range of the helical coil is affected by the diameter, wall thickness, number of coils used, and construction materials. High-pressure elements might have as many as 20 coils, while low-span sensors can have only 2 or 3 coils.

Available materials include bronze, beryllium copper, Ni-Span C, and stainless steel. The various suppliers have different practices concerning the pressure levels at which they change from spiral to helical elements. For this reason, helical elements are available with spans from 0–30 PSI to 0–80,000 PSIG (0–200 kPa to 0–550 MPa), depending on the supplier. For pressures exceeding 5,000 PSIG (35 MPa), heavy-duty stainless steel is the standard element material.

© 2003 by Béla Lipták

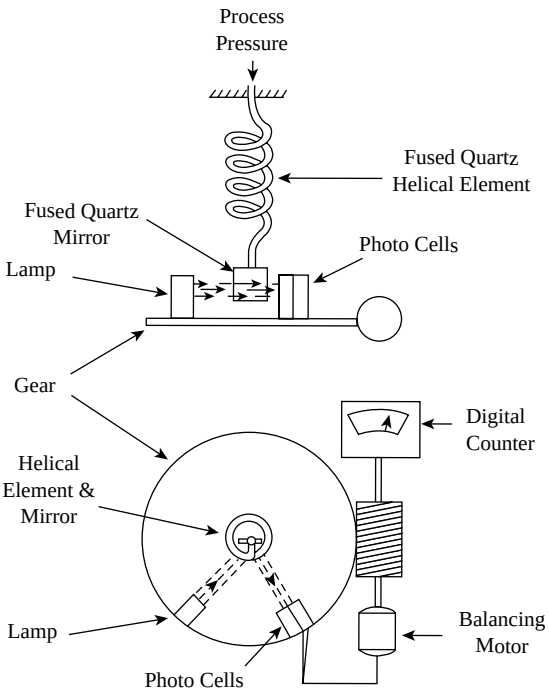

FIG. 5.4i
Fused quartz helical pressure sensor.

Helical coils can also be used as the element in differential pressure sensors if one of the pressures is acting on the outside surface and the other on the inside of the coil.

Motion balance instruments with helical elements include direct indicators, recorders, controllers, switches, and transmitters with either pneumatic or electronic outputs. Their inaccuracy is normally in the area of ±1% of span.

Fused Quartz Helix Sensors As shown in Figure 5.4i, the process pressure causes the free end of the helix to rotate together with the mirror attached to it. The quartz helix is mounted above a large precision gear that can rotate concentrically around the pressure sensor. A lamp and a pair of photo cells are attached to the gear. The light from the lamp is reflected from the mirror and distributed equally on the two photo cells. When the process pressure changes, the free end of the helix rotates the mirror, unbalancing the photo cells. This signal causes the balancing motor to turn the gear until the light falling on the photo cells is equally distributed once more. Consequently, the gear follows the movement of the free end of the helix without mechanical contact. The rotation of the gear is registered by a digital counter that is calibrated in pressure units.

This instrument detects vacuum, absolute, gauge, and differential pressures between 1 μm (10^{-3} mmHg) and 500 PSIG (3.5 MPa) in several ranges with a minimum span of 5 PSI (35 kPa). The device is repeatable to two parts in 100,000 or inaccurate to ±0.01%.

Its resolution and sensitivity are high while its hysteresis is negligible. It is presently used in laboratories, but the principle should make it suitable for industrial installations in which precision pressure detection is desired. The cost is high and the unit is sensitive to, and thus should be protected from, vibration. One of its drawbacks is the slow response speed of 2 min for full-scale travel.

Bibliography

American National Standard for Gauges: Pressure Indicating Dial Type: Elastic Element, ASME B40.1, New York, 1991.

Babichev, G.G., Kozlovskiy, S.I., Romanov, V.A., and Sharan, N.N., "Pressure Transducers with Frequency Output on the Base of Strain-Sensitive Unijunction Transistors," Paper 2.31, 1st IEEE International Conference on Sensors (IEEE Sensors 2002), Orlando, FL, June 2002.

Bailey, S.J., "Pressure Sensors and Transmitters Affected by Technological Change," *Control Engineering*, January 1984.

von Beckerath, A., Eberlein, A., Julien, H., Kerstein, P., and Kreutzer, J., *WIKA Handbook on Pressure and Temperature Measurement*, U.S. ed., Lawrenceville, GA: Wika Instrument Corp., 1998.

"Bourdon Pressure Gauges," *Measurements and Control*, December 1991.

Brombacher, W.G., "40 Years of Pressure Measurement," *Instruments and Control Systems*, September 1967.

Buckon, L., "Considerations in Selecting a Pressure Calibration Device," Paper #91–0449, Instrumentation, Systems, and Automation Society Conference, Toronto, 1991.

Buffenmyer, W.L., "Selecting Bourdon-Tube Gauges," *Instruments and Control Systems*, February 1961.

Elliott, T.C., "Temperature, Pressure, Level, Flow: Key Measurements in Power and Process," *Power*, September 1975.

Faust, E., "Pressure Calibration Standards: How Accurate Should They Be?" *Hydrocarbon Processing*, January 1994.

"Gas Purged D/P Transmitters," *InTech*, November 1992.

Giacobbe, J.B., "Selecting and Working Bourdon-Tube Materials," *Instrument Manufacturing*, July 1952.

Giitein, K., "A Dimensional Analysis Approach to Bourdon Tube Design," *Instrumentation Practice*, September 1952.

Gillum, D., "Industrial Pressure, Level, and Density Measurement," Research Triangle Park, NC: ISA Press, 1995.

Hall, J., "Monitoring Pressure with Newer Technologies," *Instruments and Control Systems*, April 1979.

Hughes, T.A., "Pressure Measurement," EMC series, downloadable PDF, Instrumentation, Systems, and Automation Society, Research Triangle Park, NC, 2002.

"Improved Online Calibration," *InTech*, December 07, 2001.

Instrumentation, Systems, and Automation Society, "Industrial Measurement Series: Pressure" (video VHS, PAL & NTSC), Research Triangle Park, NC, 2002.

Instrumentation, Systems, and Automation Society, "Pressure: Indicators and Transmitters," CD-ROM, Research Triangle Park, NC, 2002.

Johnson, D., "Pressure Sensing: It's Everywhere," *Control Engineering*, April 2001.

Marrano, S.J., "How to Choose and Apply Pressure Transmitters," *Control*, March 2000.

"Pressure Systems," *Chemical Engineering*, January 29, 1968.

"Step-Shaped Diaphragm Seal Reduces Temperature Error," *Control*, March 2000.

© 2003 by Béla Lipták

5.5 Diaphragm or Capsule-Type Sensors

B. G. LIPTÁK (1969, 1982, 1995), **REVIEWED BY J. WELCH** (1995)
J. E. JAMISON (2003)

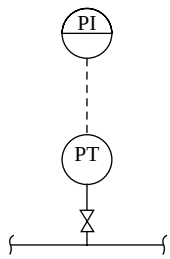

Flow Sheet Symbol

Design Pressure:	Up to atmospheric with evaluated motion balance capsule; up to 50 PSIG (344 kPa) or more with evacuated force balance capsule; up to 200 PSIG (1.4 MPa) with atmospheric reference motion balance capsule; up to 1500 PSIG (10 MPa) with atmospheric reference force balance capsule.
Design Temperature:	Phosphor bronze (–50 to 250°F, or –46 to 120°C). Ni-Span C (–50 to 300°F, or –46 to 149°C), 316 stainless steel (–400 to 600°F, or –240 to 316°C), Inconel (–300 to 1000°F, or –184 to 538°C). The other components besides the diaphragm element can limit the operating to 250°F (120°C) or less.
Materials of Construction:	Buna-N, nylon, Inconel, Ni-Span C, phosphor bronze, 316 stainless steel, beryllium copper, Monel, brass, titanium, tantalum, Hastelloy, nickel, duranickel, Teflon, Kel-F, polytetrafluoroethylene, CrNi, Ni-Cr-Co alloy.
Range:	Absolute pressure ranges from 0–5 mmHg to 0–50 PSIA (0–0.7 to 0–350 kPa); gauge pressure ranges from 0–0.5 in. H_2O to 0–200 PSIG (0–0.12 kPa to 0–1.4 MPa).
Inaccuracy:	0.1 to 1% of span. Standard indicators, recorders, and switches are the least accurate; intelligent transmitters are the most accurate.
Costs:	$200 to $500 for indicators and switches, $500 to $1200 for direct recorders, and $800 to $2000 for direct controllers and transmitters.
Partial List of Suppliers:	ABB Automation Technology (formerly Kent-Taylor) (www.abb.com) Ametek Inc. U.S. Gauge Div. (www.ametekusg.com) Bailey, a Unit of ABB (www.abb.com) Barton Instruments Systems (www.barton-instruments.com) Dresser Industries, Instrument Div. (www.dresserinstruments.com) Dwyer Instruments Inc. (www.dwyer-inst.com) Fischer & Porter, a Unit of ABB (www.abb.com) Fisher Controls International, a Div. of Emerson Process Management (www.emersonprocess.com) The Foxboro Co. (www.foxboro.com) Honeywell Inc. (www.honeywell.com) Mid-West Instrument (www.midwestinstrument.com) Moeller Instrument Co. (www.moellerinstrument.com) Moore Products, now part of Siemens Inc. (www.sea.siemens.com) Rosemount Inc. (www.rosemount.com) Validyne Engineering Corp. (www.validyne.com) Weksler Instrument Corp. (www.dresserinstruments.com) WIKA Instrument Corp. (www.wika.com) Yokogawa Corp. of America (www.yca.com)

© 2003 by Béla Lipták



FIG. 5.5a
The variety of diaphragm- and capsule-type pressure and differential pressure detectors and transmitters is very great. (Courtesy of Foxboro-Invensys.)

INTRODUCTION

This section is devoted to the description of diaphragm- and capsule-type pressure sensing elements and to the force and motion balance devices that utilize them. As shown in Figure 5.5a, the variety of such pressure detector designs is wide and varied.

These diaphragm-type pressure sensors are also discussed under differential pressure detectors (Section 5.6) and under electronic pressure sensors (Section 5.7) because the strain gauge, capacitance, potentiometric, resonant wire, piezoelectric, inductive, reluctive, and optical transducers can all be provided with diaphragm elements. Similarly, some of the high-pressure sensors (Section 5.8), pressure repeaters (Section 5.12), and vacuum sensors (Section 5.14) can also be provided with diaphragms as their sensing elements.

The full range deflection of a single diaphragm is usually limited to about 0.002 in. (0.05 mm), and the amount of deflection varies with the 4th power of the diameter of the diaphragm. Therefore, for the same amount of pressure change, the diaphragm deflection increases 16-fold if the diameter is doubled. One method of increasing the total deflection is to weld several diaphragms together into capsules.

DIAPHRAGM ELEMENTS

Pressure sensors that depend on the deflection of a diaphragm have been in use for over a century. In the last few decades, the elastic hysteresis, friction, and drift effects have been reduced to approximately ±0.1% of span in the high-quality designs. This has been achieved mostly by the use of microprocessor technology in smart transmitters. In traditional diaphragms the hysteresis error amounted to about 0.25 to 0.5% of full scale and nonlinearity could range from 0.1 to 2% of full scale.

What the microprocessor contributed in improving the performance of diaphragm-type sensors was its ability to recall from its memory the appropriate correction factors for the different values of diaphragm deflections. In other words, the microprocessor does not eliminate the nonlinearity of diaphragms, but it does memorize the amount of nonlinearity and electronically corrects for it.

Materials and Configurations

Diaphragm materials with good elastic qualities, such as beryllium copper, and with very low temperature coefficients of elasticity, such as Ni-Span C, are used. Inconel and stainless steel are used when extreme operating temperatures or a corrosive process requires them. Quartz diaphragms are used when minimum hysteresis and drift are desired.

The diaphragm is a flexible disc, either flat or with concentric corrugations, that is made from sheet metal of precise dimensions. The pressure deflection characteristics of both flat and corrugated diaphragms have been well investigated. The available corrugated profile types include sinusoidal, saw-tooth, or trapezoidal (see Figure 5.5b). The type of seal and peripheral clamping (fixing) used are dependent on the characteristics of the diaphragm.

© 2003 by Béla Lipták

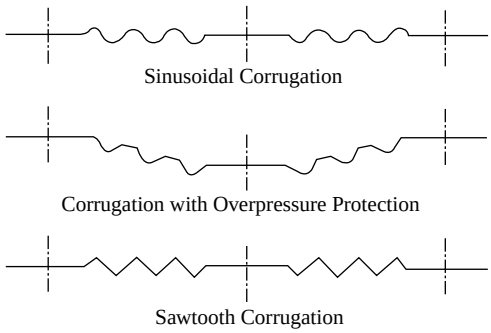

FIG. 5.5b
Common convolution cross-sections. (Courtesy of WIKA Instrument Corporation.)

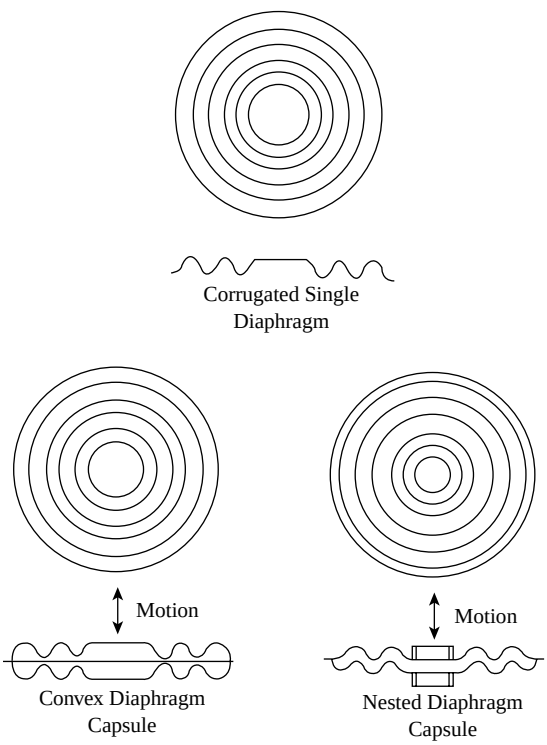

FIG. 5.5c
Standard diaphragm elements.

Some instruments use the diaphragm as the pressure sensor; others use it as a component in a capsular element. Figure 5.5b shows a single corrugated diaphragm and also some capsule designs. The capsules consist of two diaphragms welded together at their peripheries. Two basic types of capsules are illustrated: the convex and the nested. Evacuated capsules are used for absolute pressure detection, and single diaphragms are used for highly sensitive measurements. The sensitivity of a capsule increases in proportion to its diameter, which in the conventional designs varies from 1 to 6 in. (25.4 to 152.4 mm).

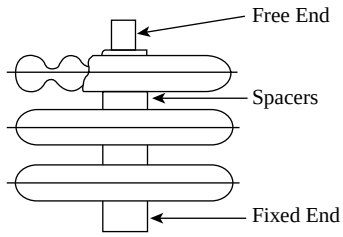

FIG. 5.5d
Multiple capsule element.

Multiple capsule elements can be built from either convex or nested capsules as shown on Figure 5.5d. These elements are useful in increasing the output motion resulting from a pressure change.

SENSOR CONFIGURATIONS

In this section, four basic designs of diaphragm pressure sensors will be discussed. They will be distinguished by the pressure reference used (full vacuum or atmospheric) and by the method of balancing the forces generated by the process pressure into force or motion balance designs. When atmospheric reference is used, the reading is called gauge pressure; when the reference is full vacuum (actually about 0.001 mmHg), the measurement is called absolute pressure. When differential pressure is measured there is no reference, as the two measurements are only subtracted.

Motion balance units are capable of driving local, direct reading indicators but are subject to hysteresis, friction, and dead-band errors. Force balance designs are transmitting devices with high accuracy but without direct indication capability.

Absolute Pressure Sensors

Motion Balance Figure 5.5e illustrates a motion balance type absolute pressure detector. The capsular element is fully evacuated and changes its length as a function of the process pressure in its housing. Because its length depends on the difference between internal and external pressures and because the internals have been fully evacuated, the element's length is a measure of the absolute pressure acting on the outside of the capsule. The capsular element is sealed inside the pressure-tight housing. The meter shaft transmits the capsule motion to the readout device or controller through a bellows seal. This seal protects against air leakage under vacuum and is fairly frictionless.

The capsule and the bellows seal are normally available in bronze, stainless steel, and nickel materials, or they can be silver or gold plated. Because the evacuated diaphragm element would collapse as the pressure on its outside increases, the capsules have been designed to bottom on each other when they are exposed to pressures above the range of the instrument.

© 2003 by Béla Lipták

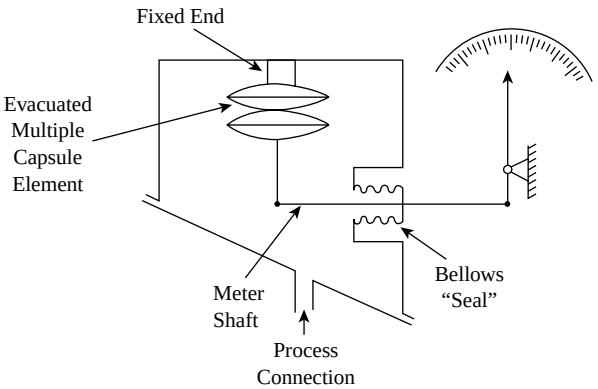

FIG. 5.5e
Motion balance absolute pressure sensor.

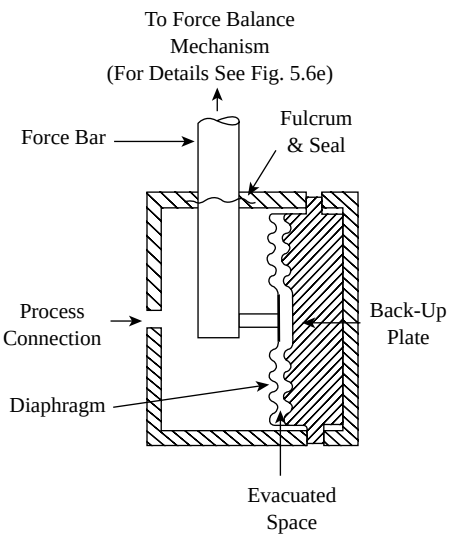

FIG. 5.5f
Force balance absolute pressure detector.

Therefore, the unit can be exposed to pressures up to atmospheric without damage to the capsule element.

The ranges available with this instrument can be as low as 0 to 5 mmHg (0 to 0.7 kPa) or as wide as 0 to 760 mmHg (0 to 100 kPa). Inaccuracy can be better than ±1% of full scale for the wide range elements, and for the narrow range capsules, it is a fraction of a millimeter of mercury.

Force Balance Design The force balance detector illustrated in Figure 5.5f is utilized in pressure transmitters, but not in direct indicator, because there is no motion available to drive a pointer. If local indication is desired, an output gauge can be installed on the transmitter. On the smart electronic transmitters this gauge is an integral part of the detector (Figure 5.6d), while on the old pneumatic transmitters, a pressure gauge detects the output air pressure. For a detailed sketch of a pneumatic force balance transmitter see Figure 5.6e.

The main sensing element in a force balance pressure transmitter is the capsule. The pressure being detected is applied to the left side of the diaphragm in the capsule, while the space on the other side of the diaphragm is fully evacuated, providing a zero absolute pressure reference (Figure 5.5f). The force felt by the force bar is related to the difference between full vacuum on the right side of the diaphragm and the process pressure on the other side or to the absolute pressure of the system measured. Due to the force balance nature of the unit, the force bar is constantly balanced; therefore, the sensing diaphragm does not move as long as the pressure detected is within the range of the instrument. If the range of the capsule is exceeded, the diaphragm moves slightly to the right where it can rest on and be supported by a backup plate with matching convolutions. This feature provides the transmitter's high over-range protection.

TABLE 5.5g
Features of Force Balance-Type Absolute Pressure Instruments

	Transmitter Range		
Features	*Low*	*Medium*	*High*
Capsule diameter:	5 in. (127 mm)	3½ in (89 mm)	2 in. (51 mm)
Minimum range:	0 to 10 mmHg	0 to 40 mmHg	0 to 375 mmHg
Maximum range:	0 to 40 mmHg	0 to 400 mmHg	0 to 1520 mmHg
Overpressure protection up to:	50 PSIG (3.5 bars)	100 PSIG (7 bars)	150 PSIG (10.5 bars)
Inaccuracy (% span):*	1%	½ to 1%	½ to 1%
Operating temperature:	–40 to 250°F (–40 to 121°C)	–40 to 250°F (–40 to 121°C)	–40 to 250°F (–40 to 121°C)

*"Intelligent" transmitters can reduce this error to 0.25% of span with analog and to 0.1% with digital signal transmission.

Transmitter Ranges and Materials The standard material of construction for these diaphragms is stainless steel. Table 5.5g lists some of the important features of this transmitter family. The transmitters are distinguished from one another by the diameter of the capsule. The transmitter ranges are adjustable in the field between the minimum and maximum values listed. Special transmitters are available in all-Monel construction or with Hastelloy body and tantalum capsule.

Atmospheric Reference

Motion Balance Design In this pressure detector, shown in Figure 5.5h, the process pressure inside the capsule is balanced against the spring action of the element. The outside surface of the diaphragm assembly is exposed to atmospheric pressure, which is then the pressure reference for this instrument. This unit is available either as a direct readout recorder or as a transmitter for remote readout. Due to the straight-line expansion of the capsule, the force-to-friction ratio is reasonably high. The diaphragm area is selected to produce a substantially greater force than required to operate the movement.

© 2003 by Béla Lipták

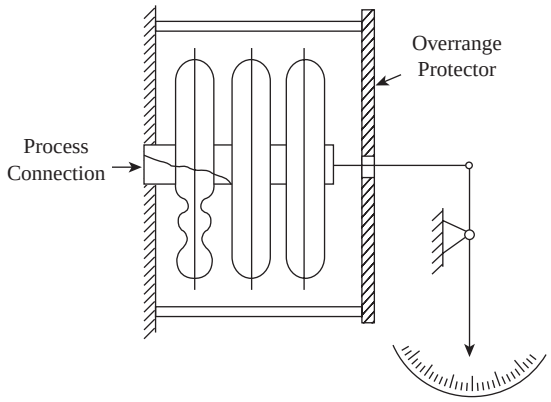

FIG. 5.5h
Motion balance pressure sensor with atmospheric reference.

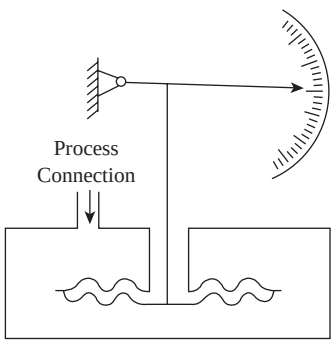

FIG. 5.5i
Nested diaphragm sensor.

The diaphragm capsules can be either convex or nested (see Figure 5.5c). The nested capsule can be exposed to higher overpressures than the convex ones, but all units are designed to withstand at least 100% overpressure over their full range. Figure 5.5i shows the nested capsule made of a convex and a concave diaphragm with the process pressure acting on the outside of the capsule rather than on the inside as in Figure 5.5e. This is the reason why high overpressures can be tolerated with the nested capsule. The range of this element is a function of the materials of construction, capsule diameter, and the particular design.

Materials of Construction and Spans Some of the frequently used diaphragm materials include: Cu-Ni-Mn (60% copper, 20% nickel, 20% manganese), phosphor bronze, Ni-Span C (constant modulus nickel alloy, 42% nickel, 2.4% titanium, 5.4% chrome, 50% iron), 316 stainless steel, and Inconel. The available capsule diameters vary from 2 to 5 in. (50.8 to 127.0 mm), with the larger diameters being sensitive enough to detect the lower pressures.

The nested capsule-type elements illustrated in Figure 5.5i can detect both gauge and vacuum pressures. Gauge pressures compress the space between the nested diaphragms, while vacuums open it up. When used to detect vacuum, the instrument is referred to as a "compound" gauge. Because the vacuum is measured against an atmospheric reference and because barometric pressure can change substantially, this is not an accurate method of detecting vacuums.

The minimum span available with these units is 0 to 3 in. H_2O (0 to 0.7 kPa) either below or above atmospheric, and the maximum span can be as high as 180 PSI (1200 kPa). This can mean, for example, a range of 20 to 200 PSIG (138 to 1400 kPa) or a full vacuum to 165 PSIG (1100 kPa) compound range. This range of pressure is covered by a variety of capsular elements, each having a minimum and maximum span.

For orientation purposes only, a few of the standard capsule spans are given in Table 5.5j. The zero adjustment on the instrument allows the range to be shifted to above or below atmospheric, and the span adjustment on the unit allows for narrowing or widening the range within the minimum and maximum span limits noted. The inaccuracy of these units is normally ±1% of span or better.

Slack Diaphragms Figure 5.5k illustrates the slack-diaphragm type motion balance pressure sensor with atmospheric pressure reference. In this unit the process pressure is balanced against either the spring action of the diaphragm or against a calibrated spring, as illustrated in Figure 5.5k.

This device is the most sensitive pressure detector in the family of elastic element sensors, and as such, it is capable of measuring near-atmospheric draft pressures. If the housing encloses both sides of the diaphragm, the unit can act as a differential pressure detector. The diaphragms are available in metal, such as stainless steel, or can be made of elastomers,

TABLE 5.5j
Features of Motion Balance-Type Absolute Pressure Instruments

Capsule	*Minimum Span*	*Maximum Span*
2 in. diameter Cu-Ni-Mn	20 in. H_2O (5 kPa)	5 PSI (34.4 kPa)
3 in. diameter Cu-Ni-Mn	8 in. H_2O (2 kPa)	40 in. H_2O (10 kPa)
Ni-Span C—large diameter	3 in. H_2O (0.75 kPa)	5 PSI (34.4 kPa)
Ni-Span C—small diameter	5 PSI (34.4 kPa)	15 PSI (103 kPa)
Ni-Span C—nested capsule	12 PSI (82.7 kPa)	180 PSI (1.24 MPa)

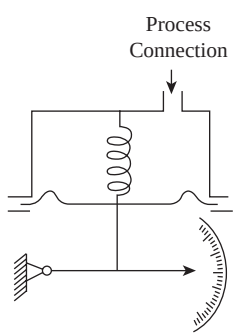

FIG. 5.5k
Slack-diaphragm detector.

© 2003 by Béla Lipták

such as Buna-N or nylon. The slack-diaphragm elements can actuate local, direct readout devices or transmitters for remote readout. Although the pressures measured are small, the force-to-friction ratio is still satisfactory due to the large diaphragm areas in these designs.

The available spans range from 0–0.5 to 0–120 in. H_2O (0–0.12 to 0–30 kPa). These spans can be either on the positive or vacuum pressure side or can cover compound ranges. Inaccuracy is in the range of ±1 to ±2% of span, and the slack-diaphragm elements can withstand overpressure between 5 and 25 PSIG (35 and 173 kPa), depending on the particular design.

Force Balance Designs The force balance differential pressure detectors (discussed in Section 5.6) can also be used as gauge pressure sensors if the low-pressure side of the differential pressure (d/p) cell is left open to atmosphere. In such installations, the output signal corresponds to the process pressure, which is connected to the high-pressure side of the d/p capsule.

Figures 5.6d, 5.6e, and 5.6f illustrate the design and operating components of these instruments. The minimum span available with these units is 0 to 2 in. H_2O (0 to 0.5 kPa) and the maximum span is 0 to 30 PSIG (0 to 2000 kPa). Only three capsules are required to cover this wide range. The minimum and maximum spans and other features of the standard d/p cells are listed in Table 5.5l.

Features and Construction Choices These capsules can be built into the conventional d/p cell body shown in Figure 5.6a or into the flat and extended diaphragm arrangements illustrated in Figure 5.6f. In the flat diaphragm design, the low-range capsule requires a 6 in. (150 mm) flange, while the medium- and high-range capsules can be accommodated by 3 in. (75 mm) flanges. The extended diaphragm version is available with medium- or high-range capsules only and requires a 4 in. (100 mm) mounting flange.

These transmitters have inaccuracies between ±1/2 and ±1% of span in their standard configurations and 0.1% of span in their microprocessor-based intelligent versions. They can withstand operating temperatures of −40 to 400°F (−40 to 200°C). The maximum static pressure that they can be exposed to varies from 225 PSIG (1.6 MPa) for the 6 in. diameter flanged unit to 6000 PSIG (41 MPa) for the high-pressure version of the standard unit shown in Figure 5.6a.

The parts exposed to the process fluid can be made of a large variety of materials, including carbon and stainless steel, Monel, Duranickel, Hastelloy, tantalum, and nickel, or provided with coatings such as Kel-F or Teflon.

PRESSURE REPEATERS

Pressure repeaters are force balance devices capable of generating an air output signal of the same pressure as that of the process. These units are useful for isolating the process and thereby preventing corrosion, the possibility of plugging in the sensing line, and other hazards. Because these units are discussed in Section 5.12, only a summary of their features is given here.

The flanged repeaters shown in Figures 5.12c and 5.12d are available in 2, 3, and 4 in. sizes (50, 75, and 100 mm), with either flat or extended diaphragm construction. The extended design is used when the main consideration for installing a repeater is protection against plugging. The available materials for wetted parts include stainless steel, Hastelloy, nickel, Teflon, Kel-F, polyvinyl chloride, Penton, and others.

Available spans vary from 0–1 to 0–100 PSIG (0–6.9 kPa to 0–0.7 MPa), and the repeater inaccuracy can be as good as ±1/4% or 0.1 in. H_2O (2.5 mm H_2O) per PSIG repeated.

When positive pressures are to be repeated, the air (or other gas) supply pressure has to be 125% of the highest pressure to be repeated. On vacuum service, the repeater inaccuracy of ±2 mmHg (±0.3 kPa) normally limits use to absolute pressures above 40 mmHg (5.2 kPa).

The repeaters can work either on a vacuum reference source (see Figure 5.12d), in which case the reference vacuum always has to be lower than the lowest absolute pressure to be repeated, or on atmospheric pressure reference with a suppression spring. If the spring is set at 16.5 PSI (114 kPa), the repeater output will be zero-shifted by this amount. When the process is at atmospheric pressure, the output is 16.5 PSIG (114 kPa), and when the process is at full vacuum, the output is 1.5 PSIG (10 kPa).

The operating temperature and static pressure limitations of these units are similar to those of the force balance d/p cells.

TABLE 5.5l
d/p Cell Capsule Capabilities

	Low Range	*Medium Range*	*High Range*
Minimum span—in. H_2O	0–2	0–25	0–30 PSID
Minimum span—kPa	0–0.5	0–6.2	0–210
Maximum span—in. H_2O	0–150	0–1000	0–3000 PSID
Maximum span—kPa	0–37.5	0–250	0–207 bars
Maximum zero suppression	Maximum span	Calibrated span	
Maximum zero elevation	Minimum span		

© 2003 by Béla Lipták

Bibliography

Babichev, G.G., Kozlovskiy, S.I., Romanov, V.A., and Sharan, N.N., "Pressure Transducers with Frequency Output on the Base of Strain-Sensitive Unijunction Transistors," Paper 2.31, 1st IEEE International Conference on Sensors (IEEE Sensors 2002), Orlando, FL, June 2002.

Bailey, S.J., "Pressure Sensors and Transmitters Affected by Technological Change," *Control Engineering*, January 1984.

von Beckerath, A., Eberlein, A., Julien, H., Kerstein, P., and Kreutzer, J., *WIKA Handbook on Pressure and Temperature Measurement*, U.S. ed., Lawrenceville, GA: Wika Instrument Corp., 1998.

Brombacher, W.G., "40 Years of Pressure Measurement," *Instruments and Control Systems*, September 1967.

Comber, J. and Hockman, P., "Pressure Monitoring: What's Happening?" *Instruments and Control Systems*, April 1980.

Demorest, W.J., "Pressure Measurement," *Chemical Engineering*, September 30, 1985.

Dyer, S.A., *Wiley Survey of Instrumentation and Measurement*, New York: John Wiley & Sons, 2001.

Elliott, T.C., "Temperature, Pressure, Level, Flow: Key Measurements in Power and Process," *Power*, September 1975.

Faust, E., "Pressure Calibration Standards: How Accurate Should They Be?" *Hydrocarbon Processing*, January 1994.

Ferree, S.R., "Sensors: Simple to Smart to Systems," *InTech*, November 1991.

"Gas Purged D/P Transmitters," *InTech*, November 1992.

Gillum, D., "Industrial Pressure, Level, and Density Measurement," Instrumentation, Systems, and Automation Society Press, 1995.

Hall, J., "Monitoring Pressure with Newer Technologies," *Instruments and Control Systems*, April 1979.

Hughes, T.A., "*Pressure Measurement*," EMC series, downloadable PDF, Instrumentation, Systems, and Automation Society, Research Triangle Park, NC, 2002.

Instrumentation, Systems, and Automation Society, "Industrial Measurement Series: Pressure" (video VHS, PAL & NTSC), Research Triangle Park, NC, 2002.

Instrumentation, Systems, and Automation Society, "Pressure: Indicators and Transmitters," CD-ROM, Research Triangle Park, NC, 2002.

Johnson, D., Pressure Sensing: It's Everywhere, *Control Engineering*, April 2001.

Lewis, J.C., "Pressure Sensing: A Practical Primer," *InTech*, November 1988.

Marrano, S.J., "How to Choose and Apply Pressure Transmitters," *Control*, March 2000.

Merritt, R., "Keeping Up With Pressure Sensors," *Instruments and Control Systems*, April 1982.

"Pressure Systems," *Chemical Engineering*, January 29, 1968.

"Step-Shaped Diaphragm Seal Reduces Temperature Error," *Control*, March 2000.

Stockdale, R., "Advanced Pressure Sensor Designs Benefit Control Systems," *Control Engineering*, June 1991.

© 2003 by Béla Lipták

5.6 Differential Pressure Instruments

J. D. GOODRICH (1982) **B. G. LIPTÁK** (1969, 1995, 2003)

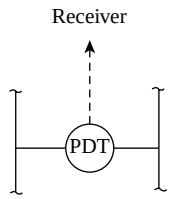

Flow Sheet Symbol

Design Pressure:	Up to 5000 PSIG; some as high as 10,000 PSIG (up to 35 MPa, some as high as 69 MPa)
Design Temperature:	Up to 350°F (177°C) for dry, force balance; up to 1200°F (650°C) on liquid-filled force balance; others up to 200°F (93°C)
Materials of Construction:	Stainless steel, Kel-F, Teflon, Hastelloy, Monel, tantalum, titanium, duranickel for force balance types
Inaccuracy:	±0.5 to ±2% of full scale for indictors and switches. For differential pressure (d/p) transmitters the basic error is from ±0.1 to ±0.5% of the actual span. Added to this are the temperature and pressure effects on the span and zero. For intelligent transmitters the pressure and temperature correction is automatic and the overall error is ±0.1 to ±0.2% of span.
Ranges:	For membrane-type d/p cells the range can be as low as 0 to 0.01 in. H_2O (0 to 2.5 Pa). Standard d/p cells are available from 0–5 to 0–850 in. H_2O (0–1.24 to 0–211 kPa) ranges. Filter status indicators and switches usually detect air fan status or dirt and/or frost buildup on filters or coils with ranges from 0–0.1 to 0–10 in. H_2O, while water flow switches used to detect flow across chillers and condensers can be set from 2 to 60 PSID. Motion balance bellows indicator ranges go up to 400 PSID (2.76 MPa). Some intelligent transmitters provide built-in PID algorithms and claim self-selection of multiple ranges, reaching 40:1 overall rangeabilities.
Costs:	$50 to $100 for air filter status indictors and switches; about $200 for water service switches and $750 to $2000 for force balance d/p transmitters, with the higher costs corresponding to intellingent units, special materials, or to the use of special seals. Motion balance bellows indicator and transmitter costs range from $800 to $2000.
Partial List of Suppliers:	ABB Inc.-Instrumentation (www.abb-com/us/instrumentation) Accutech (www.savewithaccutech.com) Ametek Aerospace (www.ametekaerospace.com) APV (www.apv.com) Automation Service (www.automationservice.com) Bacharach Inc. (www.bacharach-inc.com) Badger Meter Inc. (www.badgermeter.com) Barton Instrument (www.barton-instruments.com) Bristol Babcock (www.bristolbabcock.com) Chromalox (www.mychromalox.com) Cole-Parmer (www.coleparmer.com) ControlDepot (low d/p switch) (www.controldepot.net/pressure) Dresser Instrument (www.dresserinstruments.com) Druck Inc. (www.pressure.com) Dwyer Instruments (low d/p) (www.dwyer-inst.com) Endress+Hauser Inc. (www.systems.endress.com) Fairchild Ind. Products (www.fairchildproducts.com) Fisher Controls (www.fisher.com) FloCat (www.flocat.com)

© 2003 by Béla Lipták

Flow Research (www.flowresearch.com)
Flow-Tech (www.flowtechonline.com)
Foxboro-Invensys (www.foxboro.com)
Furness Controls (www.furnesscontrols.com)
General Eastern (www.geinet.com)
GP:50 (www.gp50.com)
Honeywell ACS (www.honeywell.com/acs)
Honeywell Industry Solutions (www.iac.honeywell.com)
J-Tec Associates (www.j-tecassociates.com)
Jumo Process Control (www.jumousa.com)
Kavlico Corp. (www.kavlico.com)
Key Instruments (www.keyinstruments.com)
Kobold Instruments (www.koboldusa.com)
Martel Electronics (www.martelcorp.com)
McCrometer (www.mccrometer.com)
Measurement Specialties (www.msiusa.com)
Meriam Instrument (www.meriam.com)
Mid-West Instrument (includes d/p switch) (www.midwestinstrument.com)
MKS Instrument (www.mksinst.com)
MycroSensor Technology (www.mycrosensor.com)
Newport Electronics (www.newportusa.com)
North American Mfg. (www.namfg.com)
Omega Engineering (www.omega.com)
Parker Filtration (www.parker.com/balston)
Phonetics (www.sensaphone.com)
Rosemount Inc. Div. of Emerson (www.rosemount.com)
Scanivalve (www.scanivalve.com)
Sensotec (www.sensotec.com)
Siemens Energy & Automation (www.sea.siemens.com)
Smar International (www.smar.com)
Smoot Co. (www.smootco.com)
Sor Inc. (www.sorinc.com)
Spirax Sarco (www.spiraxsarco-usa.com)
Thermo Brandt (www.brandtinstruments.com)
Thermo Flow Systems (www.thermopolysonics.com)
Transicoil (www.transicoil.com)
TSI Inc. (www.tsi.com)
Universal Flow Monitors (www.flowmeters.com)
Veris Inc. (www.veris-inc.com)
Viatran Corp. (www.viatran.com)
Westinghouse Process Control (www.westinghousepc.com)
Winters (www.winters.com)
Yamatake Corp. (www.ycv.com)
Yokogawa Corp. of America (www.yca.com)

INTRODUCTION

The differential pressure (d/p) devices discussed in this section include the various filter status indicators and switches, the various wet and dry d/p indicators, the membrane-type very low differential sensing transmitters, and the regular and smart transmitting d/p cells. Some d/p instruments, such as the manometers, are only briefly mentioned, as they are discussed in detail in Section 5.9.

The instruments capable of detecting pressure differentials can be divided into *dry* and *wet* designs. The dry units can be further subdivided into *force balance* and *motion balance* types. The wet units can also be subdivided into *liquid sealed (inverted bell)* and *liquid manometer* versions. In addition, the liquid manometers can be further subdivided into *visual* and *float designs*. This section describes the dry designs and for a detailed description of the wet designs, refer to Section 5.9.

MEASUREMENT ERROR

Before proceeding into the description of the various d/p cell designs, it is desirable to discuss the factors that contribute to the total error in a measurement. This includes the inaccuracy or error (E), which is determined under constant,

© 2003 by Béla Lipták

usually atmospheric, conditions and reflects the linearity, repeatability, and hysteresis errors of the instrument.

Example

For the purposes of this example, it is assumed that E = ±0.2% of *actual span*. Other factors include the zero and span shifts due to temperature variations (T_z and T_s, respectively). For a temperature variation of 100°F (55°C), T_z is assumed to be ±0.5% of *maximum range*, while T_s is ±0.5% of *actual reading*. The effect of static pressure changes on zero and span are noted by P_z and P_s and are based on the physical distoration caused by 2000 PSIG (138 bars) of operating pressure. For the purposes of this example, $P_z = \pm 0.25\%$ of *maximum range* and $P_s = \pm 0.5\%$ of *actual reading*.

Also for the purposes of this example, the maximum range is assumed to be 0 to 750 in. H_2O, and the actual span is assumed to be 0 to 100 in. H_2O. It is further assumed that the actual operating temperature is within 50°F of the temperature at which the unit was calibrated and that the operating pressure is 100 PSIG. If one calculates the total error (E_t) as the square root of the sum of the squares of the errors:

$$E_t = \sqrt{0.2^2 + 1.875^2 + 0.25^2 + 0.9375^2 + 0.25^2} = \pm 2.13\% \qquad \textbf{5.6(1)}$$

where

$E = \pm 0.2\%$

$T_z = 0.5(750 \text{ in.}/100 \text{ in.})(50°F/100°F) = \pm 1.875\%$

$T_s = 0.5(50°F/100°F) = \pm 0.25\%$

$P_Z = 0.25(1000 \text{ PSIG}/2000 \text{ PSIG})(750 \text{ in.}/100 \text{ in.}) = \pm 0.9375\%$

$P_s = 0.5(1000 \text{ PSIG}/2000 \text{ PSIG}) = \pm 0.25\%$

From the above one might note that the largest contributions to the total error come from the zero shifts caused by pressure and temperature differences between the calibration and the operating conditions. These errors can be reduced by selecting a d/p cell having a *maximum range* that is closer to the actual reading. In connection with the above example one might also note that the total error (E_t) would have been even higher if the actual reading had not been 100 in. H_2O (100% of the actual span), but instead some fraction of it. It should also be noted that the E_t value calculated above is not the full measurement error, but only that part of it that the d/p cell is likely to contribute.

Smart Transmitters Reduce Error

Lastly, one should note that one advantage of the smart transmitters is their ability to reduce the pressure and temperature effects on the span and zero; therefore, if E is ±0.1% in an intelligent transmitter, the total error E_t can be kept within about ±0.3%.

D/P INSTRUMENT DESIGNS

The differential pressure instruments will be discussed in this section starting with on-off indicators and switches. This will be followed by the description of indicating and transmitting d/p instruments.

Filter Status Indicators

As energy costs increase, the cost of material transportation is becoming a greater segment of the total cost of production. Part of the transportation energy is invested in overcoming the pressure drop across dirty filters. In order to identify the filters that are in need of cleaning, filter status indicators have been developed.

One of these units is shown in Figure 5.6a. Here the pressure difference across the filter is applied to a spring-loaded piston. The spring setting represents the maximum allowable pressure drop across the filter. When this setting is reached, the piston lifts and rotates an indication ball to show its red (instead of green) half behind the indicator lens. In this mode the operator is expected to periodically inspect these status indicators and visually note the filters that need cleaning.

D/P Switches

The d/p across filters can be also be monitored by piston-operated switches (Figure 5.6b). In this design the high pressure is applied to the top of a piston and the low pressure to the underside of the piston against which a spring presses. A given differential pressure produces a corresponding spring movement. A magnet is attached to the piston which, through a nonmagnetic body, positions a pivot magnet, thereby driving the pointer or tripping as many as four switches, or both. Since piston movement is not transmitted mechanically, there are no associated moving seals. The only seals required are the piston seals and the static seals for the end caps.

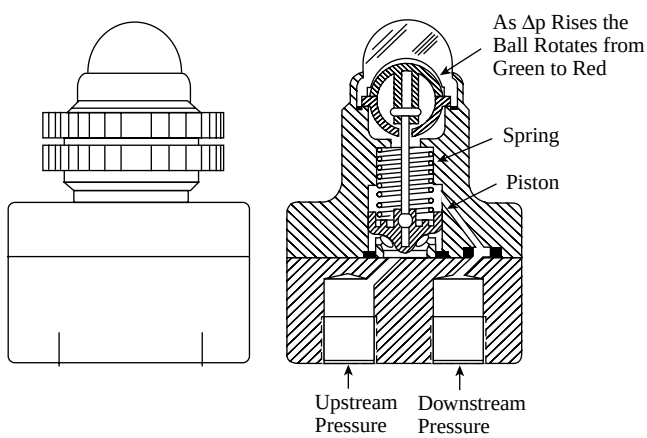

FIG. 5.6a

Filter status indicator changes its color to signal dirty filter condition.

© 2003 by Béla Lipták

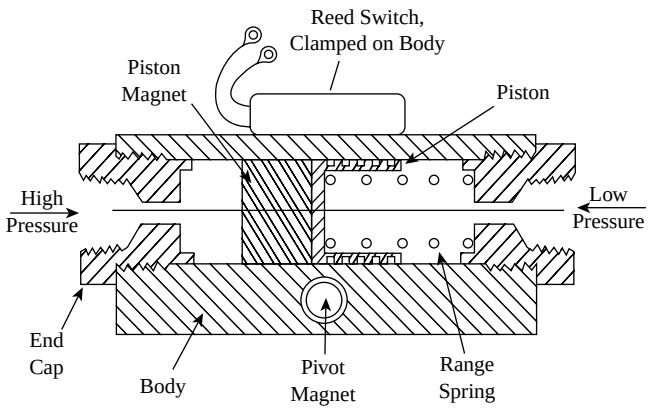

FIG. 5.6b
Piston actuated flow detector switch.

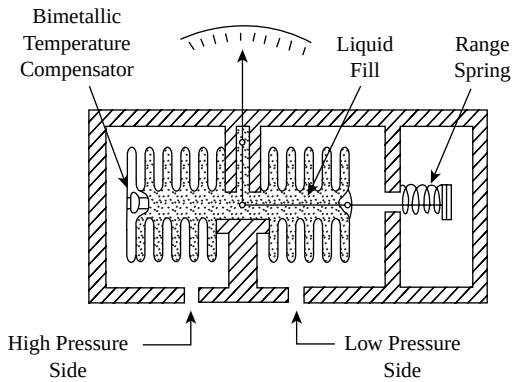

FIG. 5.6c
Motion balance type d/p indicator provided with temperature compensation.

HVAC quality d/p switches can also be used in clean rooms or on air filters, fans, or coils, because they have very wide ranges and can detect very low differentials. They can be set to actuate from 0.05 in. up to 12 in. of H_2O pressure differential. Differential pressure switches are also widely used on such water service applications as to report excessive pressures across chillers or condensers. They are available with either SPDT or DPDT configuration and can be set to actuate anywhere from 2 to 60 PSID.

D/P Indicators

The devices developed for the measurement and indication or transmission of pressure differentials can be divided into dry and wet. Dry units can be further subdivided into force balance and motion detection types. Similarly, wet units have two major categories: liquid seal (inverted bell) and liquid manometer. Liquid manometers are divided into the visual and the float designs. These designs will be discussed below, starting with the motion balance type indicators.

The operation of bellows type dry, motion balance, d/p detectors depends on liquid-filled, double-opposed bellows. They are most useful when local indication or record is required and where compressed air or electric power is not available as the energy source. Their use as transmitters is limited because of the distinct advantages of the force balance units.

Figure 5.6c illustrates the basic components of the unit: the high- and low-pressure chambers, the range spring, and the drive assembly to transfer bellows motion to the readout pointer. The bellows in both chambers and the passage between them are liquid-filled. When the unit is installed, the pressure in the high-pressure chamber compresses the bellows, so that liquid flows from it into the low-side bellows. When the low-pressure (or range) bellows expand, they exert a force against the range spring, which determines the span of the instrument.

The linear motion of the range bellows moves the drive lever, mechanically transmitting a rotary motion through the sealed torque tube assembly to the indicator. The output motion from the torque tube assembly is limited to a few degrees of angular rotation. This is sufficient for most local indicators or recorders, but when the secondary responsive device imposes a considerable load on the torque tube assembly, the accuracy and sensitivity of the unit can be destroyed. For sustained accuracy, the bellows meter depends on the repeatability of its mechanical system, which has proven to be linear within 1/2 to 1% over its full range.

Temperature Compensation and Over-Range Protection A bimetallic temperature compensator inside the high-pressure bellows automatically adjusts the capacity of the bellows assembly to the changing volume of the fill liquid due to ambient temperature variations. By adjusting the restriction in the passage between the two bellows, the device can be damaged.

Each of the bellows meters is provided with an over-range protector. The operation of one of the protection mechanisms is as follows: The bellows move in proportion to the differential pressure applied across them. When they have moved over their calibrated travel, a valve mounted on the center stem seals against its seat, trapping the fill liquid in the bellows. Because the liquid is noncompressible, the bellows are fully supported and cannot be ruptured, regardless of the overpressure applied. This over-range protection is furnished in both directions, protecting both bellows. Another function of the oil fill is to provide pulsation dampening. This is done by the use of an adjustable damper valve that restricts the oil flow from one bellows to the other.

Another design of over-range protectors involves the use of liquid-filled bellows with a number of diaphragm disks and spacer rings between them. As the bellows are subjected to over-range pressures, the diaphragms nest and the metallic spacer rings form a solid stop, fully protecting the bellows from rupture.

Ranges and Materials Bellows meters can detect pressure differentials as low as 10 in. H_2O (2.5 kPa) and as high as 400 PSIG (2.8 MPa). The minimum force required to actuate the motion detector mechanism limits the minimum differential

© 2003 by Béla Lipták

that can be measured. For very high differentials, the limitation is in the mechanical strength of the bellows.

Standard units are available with steel or stainless steel housings and stainless or beryllium copper bellows. On corrosive applications, other materials can be obtained or special high-displacement volume chemical seals can be used. Static pressure ratings of 10,000 PSIG (69 MPa) are available as standard, and the operating temperature is limited to 200°F (93°C) maximum.

Liquid Manometers Since Section 5.9 is devoted to manometers, their discussion here is limited. The desirable features of liquid-sealed d/p detectors are their self-powered nature and their strong outputs. Their disadvantages include the toxic nature of mercury; the many moving parts, some of which are exposed to the process; the relatively high first cost and installation costs; and the various limitations caused by process materials contacting the filling fluid, which might be incompatible with it for reasons of corrosion, temperature, chemical reaction, or plugging.

The dry, force or motion balance type d/p detectors, which are discussed in this section, can handle almost all installations and will require less investment and maintenance than do the wet devices such as the manometers.

D/P Transmitters

Dry, Force Balance Design An advanced force balance d/p transmitter is shown in Figure 5.6d. A pair of diaphragms is welded to opposite sides of the d/p capsule and the space between them is filled with liquid. The differential pressure of the process is applied to the two sides of this diaphragm capsule. When electronic d/p transmitters are used, the bar force is balanced against the magnetic force developed in a coil. The resulting force is then brought out via the force bar and a new state of equilibrium (force balance) is established. As a result, the output signal is made to be proportional with the differential pressure sensed by the cell. The various electronic pressure detectors are discussed in Section 5.7.

As the flowing current is changed, the force balance is reestablished by matching the force on the bar with an equal magnetic force, making the current output signal proportional to the pressure differential in the cell. In the force balance designs, wear and friction are negligible because the motion is limited to a few thousandths of an inch. The displacement volume of the capsule diaphragm is very small, and if exposed to higher differentials than designed for, the diaphragm will be pressed against and will rest on the capsule body without damage to the unit.

Pneumatic Version In the pneumatic version, feedback bellows replace the coil and an output air signal from a feedback bellows replaces the current flow. The adjustment capabilities of this instrument are noted in Figure 5.6e. By moving the span range wheel, the range of most of these units can be adjusted over a 10:1 range. For example, a d/p cell having the full water column range of 200 in. (50 kPa) can be set for its full range to operate anywhere between 20 and 200 in. H_2O (5 and 50 kPa). Cells with full-scale ranges between 1 and 1000 in. H_2O (0.25 and 250 kPa) or more are available and can withstand static pressure up to 5000 or 6000 PSI (35 or 41 MPa).



FIG. 5.6d
Smart force balance d/p transmitter, provided with local indication and output signal suited for computer controlled systems. (Courtesy of Foxboro-Invensys.)

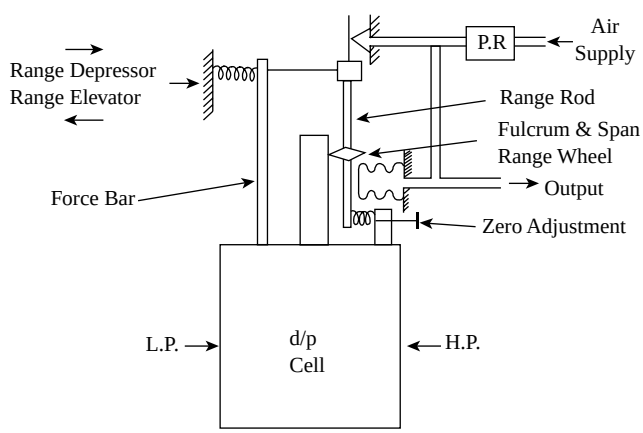

FIG. 5.6e
Force balance pneumatic differential pressure cell with adjustments shown.

© 2003 by Béla Lipták

As shown in Figure 5.6e, zero adjustments or range elevation and range depression adjustments are also provided. As the zero shift errors caused by operating pressures and temperatures (being different from the test conditions) are usually a percentage of the maximum range, the total error can be reduced if the maximum range and the actual span coincide. Table 5.5l lists some typical range values for standard d/p cells.

Suppression and Elevation If the d/p cell is used for level or density measurement or if it is installed with a liquid-filled wet leg, it might be necessary to add a spring force to its high-pressure side (to "depress" or "suppress" the range) or to its low-pressure side (to "elevate" the range). The d/p cell must be elevated, when a certain amount of hydrostatic head *on the high pressure side of the d/p cell* needs to be zeroed out. This is the case when measuring density, where a minimum specific gravity on the process side should result in a zero output.

As listed in Table 5.5l, the amount of elevation available is not unlimited, and it usually corresponds to the minimum span. As the zero suppression capability is usually greater than the zero elevation. On interface or density measurement applications d/p cells are often reversed so that their low pressure side is connected to the tank and their high pressure side to the wet leg (Figure 3.6r). When a wet leg adds a hydrostatic head to the low-pressure side of the d/p cell, it is zeroed out by depression or suppression. The maximum amount of depression that can be applied is usually the same as the maximum span minus the calibrated span.

Flat and Extended Diaphragms The diaphragm-type d/p cell designs were developed for use on viscous, corrosive, or slurry applications. One of the major goals was the elimination of dead-ended cavities, in which solids could accumulate and eventually plug the instrument.

In Figure 5.6f, two of these designs are shown: the extended and the flat diaphragm d/p cell transmitters. Their principle of operation is the same as that of the conventional d/p cells illustrated in Figure 5.6d and 5.6e. The one exception is that in these designs the high-pressure side of the diaphragm capsule is in direct contact with the process, and the force detected by it is transmitted through a flexure to the lower end of the force bar.

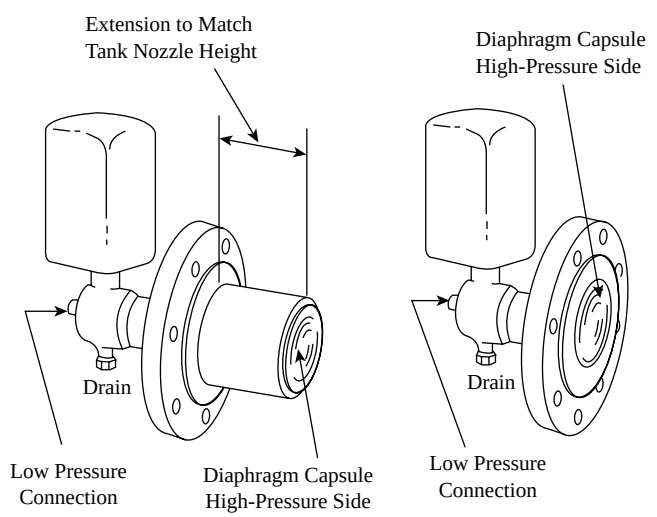

FIG. 5.6f
Extended diaphragm differential pressure cell (left) and flat diaphragm differential pressure cell (right) designs.

When the major need is corrosion protection, the flat diaphragm design can be used with corrosion-resistant lining (Kel-F, Teflon, etc.) or with the high-pressure side being made of corrosion-resistant materials (Hastelloy or titanium). With flat diaphragm installations, an isolating valve can be installed between the d/p cell and the tank nozzle, which allows for maintenance on the instrument while the tank is full.

This unit is also widely used on installations in which corrosion is not a particular problem, but simplicity of installation is desired. The flat diaphragm transmitter, being mounted directly on the tank nozzle, provides a self-supporting installation without the need for additional piping or support materials that tend to increase the installation cost of the conventional d/p cells.

When the main consideration is protection against plugging, the extended diaphragm version is used. These units are also available in corrosion-resistant materials, but their main design feature is elimination of the dead-ended cavity in which process materials can collect and gel, polymerize, or solidify. The unit is installed in the tank nozzle so that the diaphragm is flush with the inside of the tank or extends slightly into the tank.

Ranges and Pressure/Temperature Ratings Both the flat and the extended diaphragm designs are available with ranges up to 1000 in. H_2O (249 kPa) and with inaccuracies of 0.25% of actual span. The error of intelligent units is reduced to 0.1% of calibrated span when an analog output is provided and to 0.1 to 0.5 in. H_2O (2.5 to 13 mm) when digital output is used. These units can be provided with 2, 3, or 4 in. (50, 75, or 100 mm) ANSI Class 150, 300, or 600 flanges or with their DIN and BS equivalents.

The allowable process temperature is 400°F (204°C). Flanges are available in carbon or stainless steel, while the wetted parts can be a cobalt-nickel-chrome alloy, 316 SS, Hastelloy C, Monel, or tantalum. In the intelligent units, the operating temperature and pressure effects are automatically corrected. In standard d/p instruments the changes in process or ambient temperatures can cause zero shifts, as in the case with all similarly designed instruments. To minimize this effect, the d/p cell should be zeroed at the normal operating temperature, and the exposed body of the transmitter should be insulated. In more critical installations, the low-pressure side of the transmitter can be filled with a clean heat-transfer fluid that, in most cases, will eliminate the temperature gradient across the device. (Maximum process temperature for the extended design is 750°F, or 400°C.)

Wafer Elements Another family of force balance d/p cell transmitters has liquid-filled elements. Two basic versions of these designs are the wafer and the chemical seal element types.

© 2003 by Béla Lipták

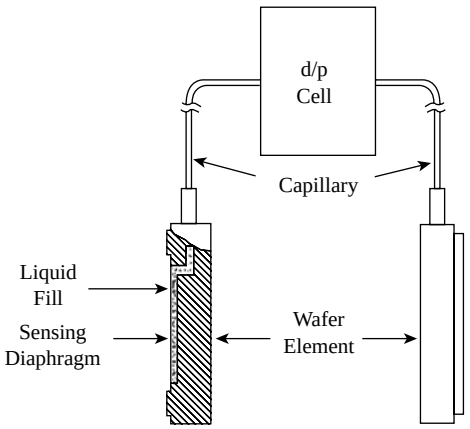

FIG. 5.6g
Differential pressure cell with wafer elements.

Wafer elements are illustrated in Figure 5.6g. These elements mount on pad connections, thereby reducing, but not eliminating, the dead-ended cavity on the process side.

These units are available with ranges up to 750 in. H_2O (187 kPa). The pressure seals are available with 316 stainless steel, Hastelloy C, or tantalum wetted parts and can be provided with capillary lengths of up to 26 ft (7.9 m). Their error in standard construction is about ±0.25% of span, while the intelligent units can reduce that to ±0.1% of calibrated span. These errors include linearity, hysteresis, and repeatability effects but exclude the effects of process temperature. In intelligent units with both seals at the *same temperature*, the total additional error caused by a temperature change of 100°F (55°C) is ±0.25 to ±0.5% of maximum span.

The filling liquid in the elements has a low thermal expansion coefficient, but temperature effects still cannot be disregarded. Actually, the pressure differential detected by the transmitter is the combined result of the hydraulic head in the tank and the differential thermal expansion in the two elements. For example, a 50°F (28°C) process temperature difference at the two elements can cause a zero shift of 4 in. H_2O (1 kPa). Even if the two wafers are at the same temperature, zero and span shifts will occur, as either the process or the ambient temperature changes.

Wafer elements can tolerate up to 1500 PSIG (10 MPa) in static process pressure and can be exposed to up to 1200°F (650°C) process temperatures. When used on vacuum service, the transmitter body should be mounted below the lower wafer element if the static pressure is under 1 PSIA (50 mmHg absolute). In short, this design does not fully eliminate the possibility of plugging, and due to its liquid-filled nature, it will drift with process or ambient temperature changes. The unit is normally considered for high-process temperature applications.

In addition to wafers, a broad variety of chemical seal protectors can also be attached to d/p transmitters to serve as either corrosion or plugging protectors. The extended-diaphragm seals shown in Figure 5.6h are installed in the tank nozzles. This makes the sensing diaphragm flush with

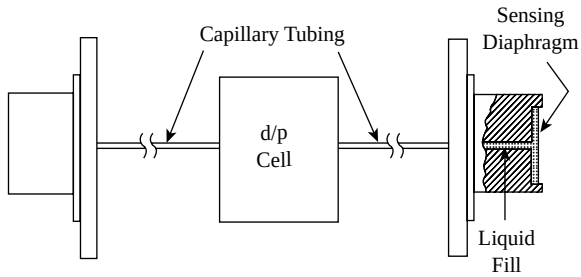

FIG. 5.6h
Differential pressure cell with extended chemical seal elements.

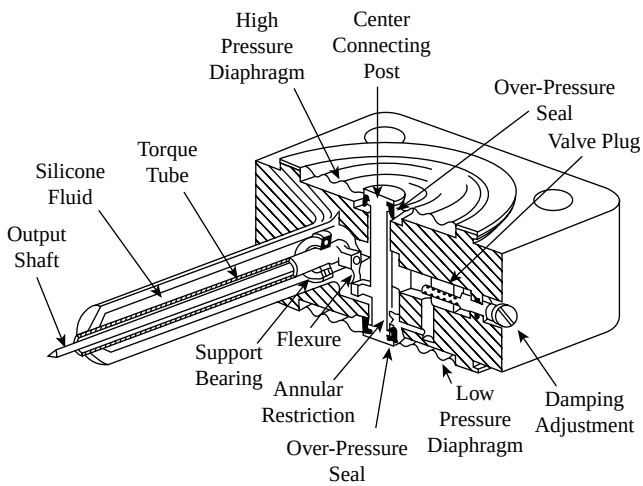

FIG. 5.6i
Combination of differential pressure element and torque tube.

the inside of the vessel or extend slightly into the tank, eliminating any cavities in which material could accumulate and solidify. These are liquid-filled elements in which the pressure sensed by the diaphragm is transmitted through the filling fluid via the capillary tubing into the d/p cell, in much the same way as with the wafer elements. Their features and limitations are also similar to those of the wafer design, and they can be provided with 2, 3, or 4 in. (50, 75, or 100 mm) ANSI Class 150, 300, or 600 flanges and 2, 4, or 6 in. (50, 100, or 150 mm) extensions.

Torque Tube Sensors

In these instruments, torque tubes are subjected to torsion that is proportional to the force (or movement) developed by the sensing element. In pressure instruments, a Bourdon or bellows element produces a linear movement proportional to pressure. In differential pressure units, a diaphragm element produces a linear movement as illustrated in Figure 5.6i. This movement is applied to the torque tube lever arm, which causes an angular displacement of the output shaft. This shaft rotation becomes the input of a motion transmitter that provides an electronic or pneumatic output signal.

© 2003 by Béla Lipták

These are motion transmitting devices and are not supplied with direct indication. All elements produce the same angular movement; consequently, all transmitters of a given type (i.e., pneumatic or electronic) are identical. Zero and span adjustments are made in the transmitter. Electronic transmitters use two wires that conduct both the signal and transmitter power. These transmitters meet Class 1, Group D, Division 1 explosion-proof and intrinsic safety requirements.

Low-Differential Transmitters

Transmitters with differential pressure spans of 0.01 to 0.05 in. H_2O (2.5 to 12.5 kPa) utilize the *pressure balance* principle. Pressure balance measurement is made possible by the unique characteristics of a device that senses and amplifies pressure by means of a membrane rather than a diaphragm. Since the membrane does not move or displace during measurement, the valve has no moving or mechanical parts to wear or contribute to hysteresis. Thus, the device will accurately sense very low pressures at its input ports, while being insensitive to shock, vibration, and mechanical problems normally associated with high-mass pressure-sensing devices. It consumes less than 1/5 the amount of instrument air of a traditional d/p cell.

Because this transmitter does not have bellows or diaphragms that must fill with air, it responds much faster to an input change than any other device measuring pressure changes at very low levels. This means that in an application measuring turbulent air or gas flow, the transmitter will exhibit a higher output than manometers or similar devices because it will respond to true average flow, which has short-term peaks not seen by a manometer or mechanical device.

This transmitter is not wetted by the process, but rather continuously purges the high and low ports with a low flow of air. This prevents the entrance of water, dirt, or process gases into the sensitive measurement cavities of the transmitter. As a result of this constant purge, some back-pressure, or resistance to flow in the connecting tubing, will develop. Therefore, this tubing must never be blocked, and corrections must be made for the tube pressure drop.

Membrane Type Design In the transmitter illustrated in Figure 5.6j, supply air enters through the orifice. When there is no pressure difference between the high and low ports, the membrane does not exert a force on the supply cavity, and output pressure does not appear at the output port. If output is dead-ended, all the supply flow is relieved through the ports.

When a difference exists between the high and low ports, the membrane exerts a force on the supply cavity, which also appears at the output port. This pressure is a function of the gain, which is a function of dimension *a* and *b*. When the pressure in the supply cavity satisfies the gain equation, supply air flows out of the supply cavity through the low port. At this point, the valve is in equilibrium. If the applied pressure decreases, the reverse occurs. The valve has a stable gain and no measurable hysteresis; therefore, the valves can be cascaded (output of one fed into the input of the next valve) for very high total gains.

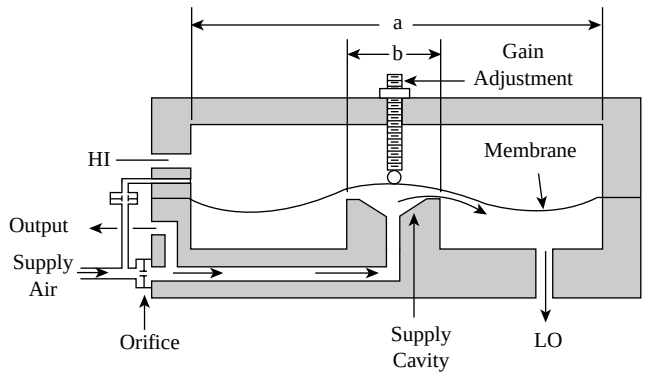

FIG. 5.6j
Membrane low differential pressure transmitter.

Bibliography

Babichev, G.G., Kozlovskiy, S.I., Romanov, V.A., and Sharan, N.N., "Pressure Transducers with Frequency Output on the Base of Strain-Sensitive Unijunction Transistors," Paper 2.31, 1st IEEE International Conference on Sensors (IEEE Sensors 2002), June 2002.

von Beckerath, A., Eberlein, A., Julien, H., Kerstein, P., and Kreutzer, J., *WIKA Handbook on Pressure and Temperature Measurement*, U.S. ed., Lawrenceville, GA: Wika Instrument Corp., 1998.

"Capacitance Change Senses Differential Pressure," *Control Engineering*, June 1970.

Demorest, W.J., "Pressure Measurement," *Chemical Engineering*, September 30, 1985.

Dyer, S.A., *Wiley Survey of Instrumentation and Measurement*, New York: John Wiley & Sons, 2001.

Figliola, R.S. and Beasley, D.E., *Theory and Design for Mechanical Measurements*, 3rd ed., New York: John Wiley & Sons, July 2000.

Hughes, T.A., "Pressure Measurement," EMC series, downloadable PDF, Instrumentation, Systems, and Automation Society, 2002.

"Improved Online Calibration," *InTech*, December 07, 2001.

Instrumentation, Systems, and Automation Society, "Industrial Measurement Series: Pressure" (video VHS, PAL & NTSC), 2002.

Instrumentation, Systems, and Automation Society, "Pressure: Indicators and Transmitters," CD-ROM, 2002.

Johnson, D., "Pressure Sensing: It's Everywhere," *Control Engineering*, April 2001.

Lawford, V.N., "Differential Pressure Instruments: The Universal Measurement Tools," *Instrumentation Technology*, December 1974.

Marrano, S.J., "How to Choose and Apply Pressure Transmitters," *Control*, March 2000.

Merritt, R., "Keeping Up with Pressure Sensors," *Instruments and Control Systems*, April 1982.

Slomiana, M., "Selecting Differential Pressure Instruments," *Instrumentation Technology*, August 1979.

Slomiana, M., "Using Differential Pressure Sensors," *Instrumentation Technology*, September 1979.

"Transmitters," *Measurements and Control*, June 1991.

© 2003 by Béla Lipták

5.7 Electronic Pressure Sensors

B. G. LIPTÁK (1969, 1982, 1995, 2003)

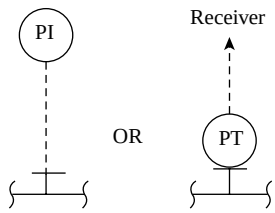

Flow Sheet Symbol

Types:
A. Strain gauge (unbonded, bonded wire or foil, bonded and diffused semiconductor)
B. Capacitive
C. Potentiometric
D. Resonant wire
E. Piezoelectric
F. Magnetic (F1: inductive and LVDT, F2: reluctive)
G. Optical

Ranges:
A. 3 in. H_2O to 200,000 PSIG (750 Pa to 1400 MPa)
B. From high vacuums in the 1 to 1000 μm range and low differentials starting at 0.001 in. H_2O (0.25 Pa) up to 10,000 PSIG (70 MPa)
C. 5 to 10,000 PSIG (35 kPa to 70 MPa)
D. Absolute pressure from 10 mmHg to 600 PSIA (1.2 to 4120 kPa); gauge to 6000 PSIG (42 MPa); differential to 750 in. H_2O (180 kPa)
E. 0.1 to 10,000 PSIG (0.7 kPa to 70 MPa)
F1. 30 to 10,000 PSIG (210 kPa to 70 MPa)
F2. 1 in. H_2O to 10,000 PSIG (250 Pa to 70 MPa)
G. 5 to 60,000 PSIG (35 kPa to 413 MPa)

Operating Temperatures:
A. –66 to 250°F (–54 to 121°C); with seals, up to 650°F (343°C)
B and F1. 0 to 165°F (32 to 74°C)
C. 32 to 300°F (0 to 149°C)
D. –40 to 250°F (–40 to 120°C)
E and F2. From cryogenic up to 600°F (315°C)

Materials of Construction:
Cadmium plated carbon steel, Co-Ni-Cr alloy, 316 stainless steel, Hastelloy C, Monel, Inconel, or tantalum

Vibration Insensitivity:
Excellent (A, E, G); good (D, F2); moderate (B); poor (C, F1)

Inaccuracy:
A. From 0.1% of span to 0.25% of full scale. Drift = 0.25% of full scale over 6 months; temperature effect = 0.25% of full scale per 100°F
B. 0.1% of reading or 0.01% of full scale. Temperature effect = 0.25% of full scale per 100°F; drift is negligible
C. 0.5 to 1% of full scale. Temperature effect = 1% of full scale per 100°F; drift = 1% of full scale per year
D. 0.1% of calibrated span. Drift = 0.1% of reference span per 6 months; temperature effect = 0.2% of maximum span per 100°F
E. 1% of full scale. Temperature effect = 1% of full scale per 100°F
F. 0.5% of full scale. Temperature effect for F1 = 0, for F2 = 1 to 2% per 100°F
G. 0.1% full scale

Costs:
A. $10 to $100 for elements only in OEM quantities
B. $1000 to $4000
C. and F. $300 to $500 per transducer
E. $500 to $1500
A–G. $750 to $2000 for force balance d/p transmitters, with the higher costs corresponding to intelligent units, special materials, or the use of special seals

© 2003 by Béla Lipták

Partial List of Suppliers:

Action Instruments (C, F) (www.actionio.com)
Ametek Drexelbrook (A) (www.drexelbrook.com)
Ametek U.S. Gauge Div. (F1) (www.ametekusg.com)
Barksdale (A) (www.barksdale.com)
Barton Instrument (A, B) (www.barton-instruments.com)
Dresser Instrument (A, B, C, G) (www.dresserinstruments.com)
Druck Inc. (A, E) (www.pressure.com)
Dwyer Instruments (A) (www.dwyer-inst.com)
Endress & Hauser (B) (www.us.endress.com)
Entran Devices Inc. (A) (www.entran.com)
Fisher Controls (B) (www.fisher.com)
Foxboro-Invensys (D, E) (www.foxboro.com)
Honeywell Sensing and Control (www.honeywell.com/sensing)
Jumo Process Control (E, F) (www.jumousa.com)
Kaman Instrumentation (F) (www.kaminsensors.com)
Kistler-Morse (A, E) (www.kistlermorse.com)
MKS Instruments Inc. (B) (www.mksinst.com)
Moore Industries (C, E) (www.miinet.com)
North American Mfg. (B) (www.namfg.com)
PCB Piezotronics (E) (www.pcb.com)
Rosemount Inc. Div. of Emerson (B) (www.rosemount.com)
Scanivalve Corp. (A) (www.scanivalve.com)
Senso-Metrics Inc. (A) (www.senso-metrics.com)
Sensotec Inc. (F) (www.sensotec.com)
Siemens Energy and Automation (B) (www.sea.siemens.com)
Transicoil Inc. (C, F1) (www.transicoil.com)
Validyne Engineering (F2) (www.validyne.com)
Viatran Corp. (A, B) (www.viatran.com)
Yokogawa Corp. of America (C) (www.yca.com)

INTRODUCTION

The electronic pressure sensor categories discussed in this section include the strain gauge, capacitance, potentiometric, resonant wire, piezoelectric, reluctive, and inductive types and their many subcategories. Most of these devices are available either as basic sensor elements or as part of either a conventional or an intelligent transmitter. Each category is separately discussed below. Smart transmitters are discussed at the end.

ELECTRICAL SAFETY

While Chapter 7 discusses the safety aspects of control systems, some hazardous area classifications are also listed in this section. Hazards arising from the use of electricity are controlled by standards[1] that specify the housing requirements for electronic transmitters in locations, where fire and explosion hazards might exist due to the presence of flammable gases, liquids, combustible dust or fibers. American National Standards Institute/National Fire Protection Association 70 classifies the industrial areas according to Class, Division, and Group as follows:

Class:
- I – Vapor
- II – Dust
- III – Fiber

Division:
- 1 – Always present
- 2 – Present only under fault conditions

Group:
- A – Acetylene
- B – Hydrogen
- C – Ethylene
- D – Propane
- E – Metal dust
- F – Carbon dust
- G – Grain dust

The National Electrical Manufacturers Association (NEMA) classifies electrical equipment enclosures that can be used in hazardous locations as follows:

NEMA 7 – For indoor use in Class I, Groups A, B, C, and D locations. These enclosures are designed to withstand the pressure resulting from internal explosion and to contain the explosion from igniting the atmosphere surrounding the enclosure.

NEMA 8 – For indoor or outdoor use in Class I, Groups A, B, C, and D locations. All potentially arcing contacts and connections are immersed in oil to prevent ignition of an explosive atmosphere.

© 2003 by Béla Lipták

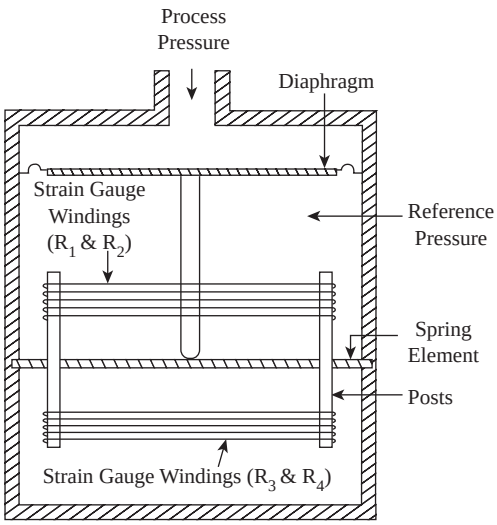

FIG. 5.7a
Pressure transducer with unbonded strain gauge wires.

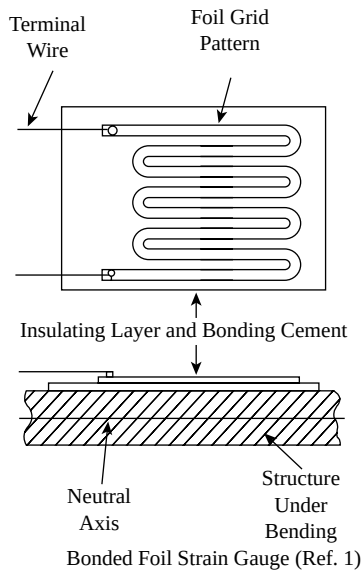

FIG. 5.7b
Bonded foil strain guage.[2]

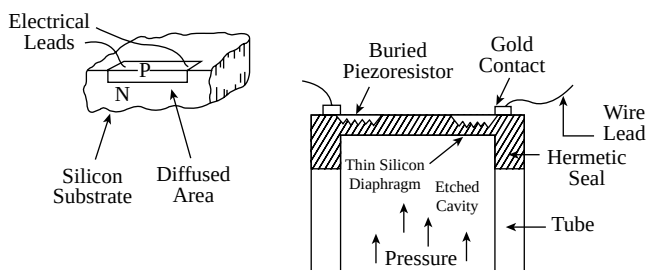

FIG. 5.7c
Diffused semiconductor (piezoresistor) strain gauge.

NEMA 9 – These enclosures are for indoor use in a Class II, Group E or G locations. They serve to prevent the entrance of dust.

NEMA 10 – These are non-ventilated enclosures meeting the requirements of the Mine Safety and Health Administration, 30 C.F.R. Part 18.

STRAIN GAUGE TRANSDUCERS

Strain gauge transducers can be built by using unbonded wire elements that are stretched between a fixed and a moving point on an elastic pressure sensor (Figure 5.7a). These devices are sensitive, but fragile and vibration sensitive. The bonded wire strain gauge was invented in 1938. A wire filament is attached to a test specimen by plastic cement and the strain in the wire is measured in terms of its resistance (Figure 5.7b). Constantan, nichrome, platinum or Karma-type alloy wires, foils, or semiconductor materials can be permanently bonded to the strained surface. Such strain gauge designs are inherently unstable (subject to creep) due to degradation of the bond, temperature sensitivity, and hysteresis caused by thermoelastic strain. In attaching the sensor to the surface, the thin-film sensors use a molecular bond instead of cement. This sputter-deposition technology is also used in the manufacturing of integrated circuitry sensors.

The diffused semiconductor strain gauge, which consists of resistance elements diffused into a single silicon chip, was developed in the 1970s for the automotive field. The silicon wafer acts as the sensor diaphragm, reducing both the size and the cost of the sensor (Figure 5.7c). The silicon wafer is more reliable than the metal diaphragms because after being strained it returns to its original shape due to its excellent elasticity.

The sensitivity of semiconductor-type strain gauges is 100-fold greater than that of wire strain gauges. In manufacturing the diffused strain gauge sensor, boron gas is allowed to diffuse into the silicon chip and units with the silicon at the molecular level. The thickness of the wafer is controlled by chemical etching, and it is this thickness that determines the pressure range of the sensor. Standard units are available from 0–1 to 0–250 PSIG (0–7 to 0–1725 kPa), but they are most often used on instrument air service ranges of 3 to 15 PSIG (0.2 to 1.0 bars). These sensors are small, inexpensive, accurate, and repeatable, and they provide a wide pressure range and a strong output signal level. Their limitations include sensitivity to ambient temperature variations, which can be compensated for in the intelligent transmitter designs.

Historical Development

The word strain means changes in dimensions of solid bodies due to the actions of forces exerted upon them. The earliest devices used to detect strain were the extensometers. These instruments simply determine the change in length of bodies, and the change in length divided by the original length was

© 2003 by Béla Lipták

a measure of the average strain. The true strain gauge does not measure extension, but changes its physical characteristics so that its electrical resistance changes as a function of the strain to which it is subjected.

The operating principle of strain gauges is more than 100 years old, and was discovered when Lord Kelvin reported that metallic conductors subjected to mechanical strain exhibited a corresponding change in electrical resistance. This principle was first put to practical use on strain measurement of concrete structures in the 1930s.

These units are called unbonded wire gauges (see Figure 5.7a) because the wire elements are mounted on a mechanical frame whose parts can move in relation to each other, causing a change in wire tension as load changes. Therefore, the change in electrical resistance is a measure of strain.

The Bonded Strain Gauge The bonded strain gauge represented a major advance in strain gauge technology. This design eliminated the mechanical frame by attaching the sensing view directly to the strained surface. The bond was an insulator that forced the conductor wire to follow the strain on the surface without excessive stresses developing in the bond itself. This can be achieved if the conductor cross-sectional area is small in relation to the surface area per unit length. Strain gauge wires of less than 0.001 in. (0.025 mm) diameter have a surface area that is several thousand times more than their cross-sectional area. Therefore, the bond between the strained surface and the wires (mounted on paper or plastic carriers) is sufficiently strong. Foil gauges have also been used, in which the foil thickness can be as low as 0.0001 in. (0.025 mm).

Semiconductors, such as silicon and germanium, also came into use as the gauge elements. The most attractive characteristic of semiconductors is their sensitivity, which is close to 100 times greater than that of metallic wires. When metallic wires are used, they are likely to be chrome-nickel alloys, although pure metals, such as platinum, are also used as temperature compensators. The desirability of a certain alloy used as a wire element is partially a function of its strain sensitivity. Strain sensitivity (S) is defined as the ratio between unit extension ($\Delta L/L$) and corresponding change in specific resistivity ($\Delta r/r$).

$$S = \frac{\Delta r / r}{\Delta L / L} \qquad \textbf{5.7(1)}$$

where L is the initial length of the wire and r is the specific resistivity in that unstrained condition. If the strain occurs within a certain portion of the elastic range, the strain sensitivity is constant. This means that by detecting resistance, we are sensing a value that is linearly related to strain. In actual installations, several factors, such as geometry of grid, wire size and material, direction of strain, type of bond, and so on, affect the relationship between axial strain and change in resistance. This is expressed by the constant called gauge factor:

$$\text{Axial Strain} = \frac{\Delta R / R}{\text{Gauge Factor}} \qquad \textbf{5.7(2)}$$

Temperature Compensation When strain-gauge-sensing elements are used, process temperature variations must be compensated for because temperature changes will cause both the base material to which the element is bonded and the element itself to expand or contract. In addition, the coefficient of resistivity of the element will vary with temperature. There are several methods of temperature compensation.

1. In near-ambient temperature ranges (−100 to 150°F, or −73°C to 66°C), thermal errors can be made negligible without compensation.
2. The element can be directly calibrated for the anticipated temperature range, and then by detecting process temperature, the reading can be corrected.
3. The element can be selected so that its thermal properties will match those of the mounting surface material.
4. Dual element gauges are also employed (one having positive and the other negative response to temperature changes) when they cancel out each other's effects within a set temperature range.
5. The most frequently employed method is the use of dummy elements. The dummy gauge is mounted on the same surfaces as the active element, and is exposed to the same temperature, but is not subject to the forces applied. If such a dummy is connected in a Wheatstone bridge arm adjacent to the active element, it will automatically compensate for temperature effects.

Detecting the Change in Resistance

The resistance change of strain gauges being small, precise instrumentation is required to detect it with good accuracy. The Wheatstone bridge is one of the common configurations used for strain gauge measurement. Usually each arm of the bridge contains a strain-sensitive element (see Figure 5.7d). Some of the elements can be active or dummies. The bridge will be balanced when $R_1R_3 = R_2R_4$. After an initial condition of balance, the change in output voltage is:

$$\Delta E = V/4R_0(\Delta R_1 + \Delta R_3 - \Delta R_2 - \Delta R_4) \qquad \textbf{5.7(3)}$$

where R_0 is the initial, equal resistance of each element. From this equation it can be seen that if two elements from adjacent arms of the bridge (R_1 and R_2, or R_3 and R_4), the temperature effects will be minimized because their influence on the output is subtractive. If the active gauges are on opposite arms of the bridge, their effect is additive, and dummy elements are needed to achieve compensation. The Wheatstone circuit can detect both static and dynamic strains and is well suited for temperature compensation.

© 2003 by Béla Lipták

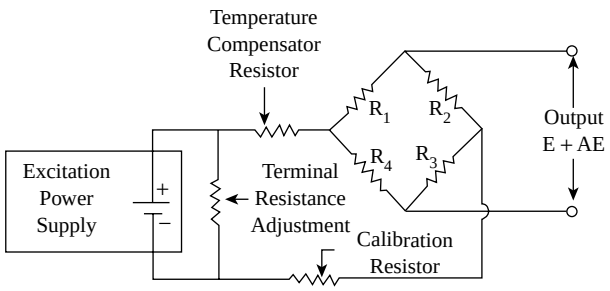

FIG. 5.7d
Wheatstone circuit for strain gauges.

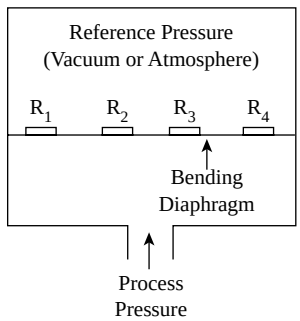

FIG. 5.7e
Strain gauge transducer with diaphragm element.

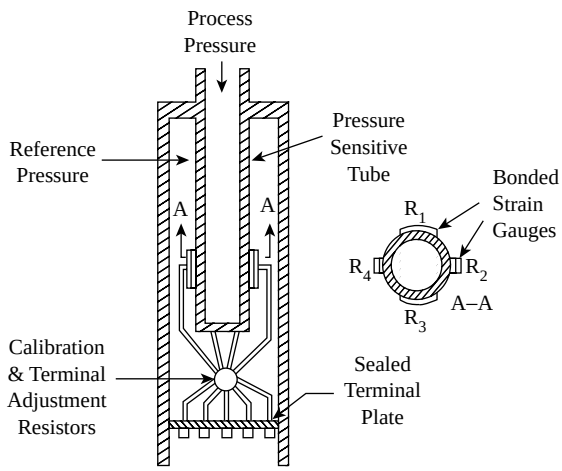

FIG. 5.7f
Strain gauge transducer with elements bonded to tube surface.

The ballast or potentiometric circuit is arrived at by making R_2 = Infinity and R_3 = 0 in Equation 5.7(3). This circuit is simpler than the Wheatstone bridge and has the added advantage of possibility for common ground for the measuring instrument, amplifier, and measuring circuitry. The drawbacks include the difficulty of temperature compensation, and the fact that the circuit is suited to dynamic, not static, strain sensing.

The strain gauge transducers normally have a bridge resistance that varies from 100 to 500 Ω. They can be excited by either AC or DC voltage from a power supply providing an output voltage in the range of 8 to 40 V. The output generated by the bridge can be anywhere from 1 to 4 mV per volt excitation. Calibrated inaccuracy is 0.25% of span or better.

The output millivolt signal from the circuit can be converted to DC milliamperes or sensed directly by analog or digital readout devices, including typewriters or punched tape. Where large numbers of measurements are involved, a switching box with up to 50 channels is provided, which allows a single digital indicator to read any of the measurements. When fluctuating pressures are to be detected, the frequency of vibration has to be taken into account. For frequencies up to 50 cps, conventional recorders are acceptable; up to 2000 cps, galvanometer systems recording on light-sensitive paper are preferred; and at still higher frequencies, the cathode ray oscilloscope is used.

Transducer Designs

In the unbonded design (Figure 5.7a), the pressure to be detected causes displacement of the diaphragm. The force, which is applied to the diaphragm, is transmitted by the force rod to the spring element. Motion of the spring center causes movement of the posts upon which the 0.0003 in. (0.0075 mm) diameter resistive wires are mounted. The strain is increased in two of the windings and is decreased in the other two. These windings in the form of a Wheatstone bridge provide a millivolt output that is a linear function of process pressure.

Bonded Designs One of the bonded designs is shown in Figure 5.7e. Here the process pressure is applied to a flat diaphragm. The strains resulting from the diaphragm deflection are sensed by four strain elements that are bonded directly to the underside of the diaphragm. The changes are resistance of the elements that are measured as an indication of process pressure.

The working element of the strain gauge transducer shown in Figure 5.7f is a tube closed on one end, with the other end open to the process pressure. Four strain gauges are bonded to the outside of this tube. Two of the elements are strained under pressure and two are not because they are mounted longitudinally and circumferentially. When the tube is pressurized, its minute expansion changes the resistance of the gauges, which are connected to a Wheatstone bridge (see Figure 5.7d). Calibration and terminal adjustment resistors are provided outside the tube (see Figures 5.7d and 5.7f).

In Figure 5.7g, two bellows are the working elements. When used to detect differential pressure (d/p), both bellows are connected to the process. Otherwise only one is connected, and the other provides atmospheric or full-vacuum reference for the unit. Here, the strain detector elements are bonded to the bending beam as shown.

Force Balance Still another design is illustrated in Figure 5.7h, in which the strain gauge sensors are adapted to the force balance d/p cell. Here, the pressure difference across the diaphragm transmits a corresponding force to the lower end of the force bar. This bar is connected to the strain tube,

© 2003 by Béla Lipták

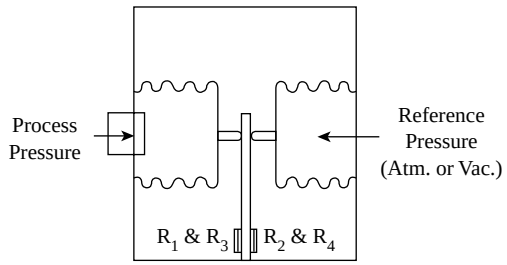

FIG. 5.7g
Bonded strain gauge transducer with bellows elements.

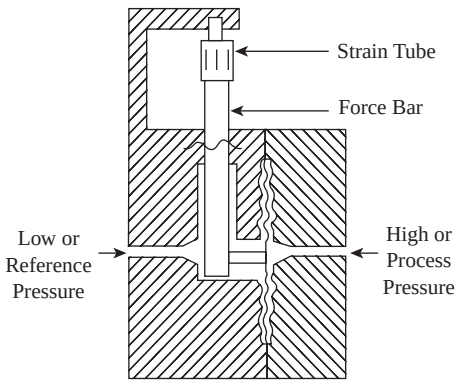

FIG. 5.7h
Force balance d/p cell with strain gauge elements.

and the strain in the tube is in direct proportion to the pressure differential.

In summary, strain gauge elements can detect absolute, gauge, and differential pressures with spans from 30 in. H_2O to 200,000 PSIG (7.5 kPa to 1400 MPa). Their inaccuracy falls between 0.2 and 0.5% of span. Compensated units are available for temperatures between −60 and 250°F (−50 and 120°C). Special designs can handle process temperatures up to 600°F (316°C).

Most transducers are available with steel or stainless steel wetted parts and in very small sizes. They are stable devices with good speeds of response and generate output signals in the range of 15 to 100 AC or DC mV. A large variety of readout devices is available, some of which can be located up to 1000 ft (300 m) from the transducer. Most designs contain no moving parts and are suitable for high overloads; the diffused semiconductor types have good shock and vibration characteristics. All strain gauge installations necessitate regulated power supplies for the excitation voltage.

They are used in installations in which small size, fast speed of response under dynamic loads, or high-static pressures are necessary.

CAPACITANCE TRANSDUCERS

The basic operating principle involved in all capacitive pressure sensors is the measurement of change in capacitance resulting from the movement of an elastic element. The elastic

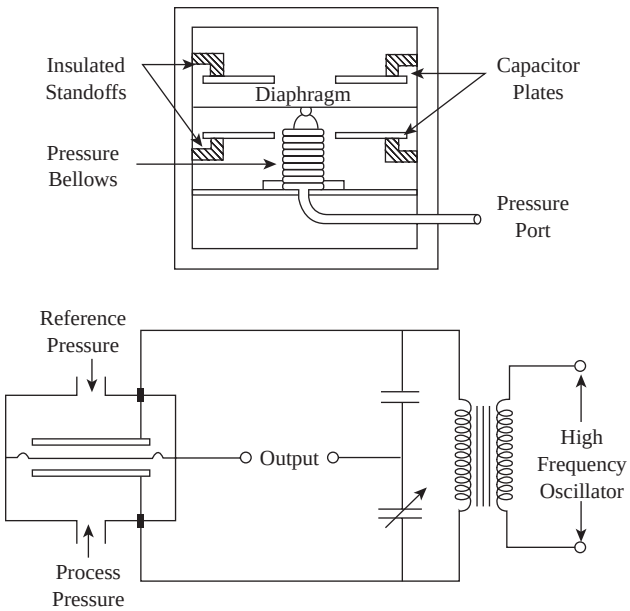

FIG. 5.7i
Capacitance pressure detector.

element in most designs is an Inconel, Ni-Span C, or stainless steel diaphragm or a metal-coated quartz element exposed to the process pressure on one side and to the reference pressure on the other. Depending on the reference pressure used, the unit can detect absolute, gauge, or differential pressures.

The unit shown in Figure 5.7i incorporates two capacitor plates, while other designs have only one such plate. A high-voltage, high-frequency oscillator is used to energize the sensing element. Changes in process pressure deflect the diaphragm, and a bridge circuit detects the resultant change in capacitance. The two-plate design can be operated in balanced or unbalanced modes. If the circuit is operated in the balanced mode, the output voltage is fed to a null detector, and the capacitor arms are varied to maintain the bridge at null. In this mode, the null setting itself is a measure of process pressure. If the circuit operates in the unbalanced mode, the ratios between output voltage and excitation voltage are the indication of process pressure.

In the single-capacitor design, the plate is positioned on one side of the sensing diaphragm. The capacitance of the element, being a function of diaphragm deflection, is a measure of process pressure. The element's capacitance is converted and amplified into a DC mA current signal. If desired, direct DC voltage output can also be used when the readout device preference is similar to a digital voltmeter.

Capacitance pressure sensors are accurate to ±0.1 to ±0.2% of span. With the proper selection of diaphragms, they can handle pressure ranges from 3 in. H_2O up to 5000 PSIG (0.08 kPa to 35 MPa) or vacuum measurements down to the micron range.

Capacitance pressure transducers were originally designed to meet the needs of low vacuum researchers; today they are second only to the strain gauges in popularity. They are

© 2003 by Béla Lipták

frequently used as secondary standards, particularly on low absolute and low differential pressure applications. Their advantages include good accuracy, rangeability, linearity, and speed of response. Their limitations of temperature sensitivity, short leads from the sensor, high output impedance, sensitivity to stray capacitance, sensitivity to vibration, low overpressure capability, and corrosion sensitivity have all been reduced in the newer designs. The single-sided electrode designs are now suited to corrosive gas services, and for high-precision applications, temperature-controlled sensors are available.

POTENTIOMETRIC TRANSDUCERS

The wiper arms of potentiometric pressure transducers are usually linked to Bourdon or bellows elements. In such a transducer, a change in process pressure moves the connecting (wiper) rod over a precision potentiometer, which converts the pressure into electric resistance (Figure 5.7j). The contacting wiper tip is usually made of a noble metal. These transducers require the least sophisticated signal conditioning and therefore are the least expensive. Their spans are available from 5 to 10,000 PSIG (35 kPa to 70 MPa), and their measurement accuracy is about 1% of full scale. Their advantages include low cost, small size, and high output signals without further amplification. Their disadvantages are related to mechanical wear that results in short life and high noise levels as the wiper experiences nonlinear mechanical loading, static friction, or loss of its intimate contact with the resistive element.

RESONANT WIRE TRANSDUCERS

The resonant wire pressure transducer was introduced in the late 1970s. In this design an oscillator circuit causes a wire to oscillate at its resonant frequency, while the wire tension is varied as a function of the process pressure. Figure 5.7k illustrates the resonant wire design used to detect differential pressures. The process pressures are detected by the high pressure and low pressure diaphragms on the right and left of the unit. As the pressure difference rises, the fill fluid

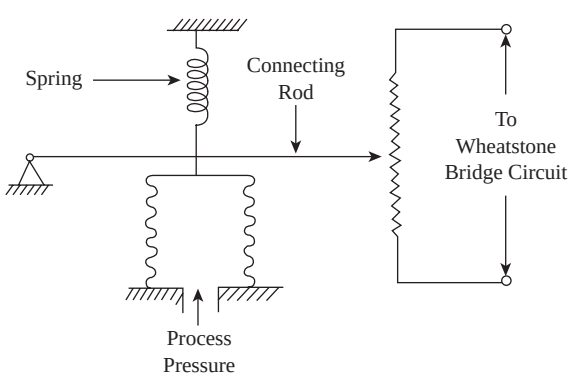

FIG. 5.7j
Resistance pressure sensor.

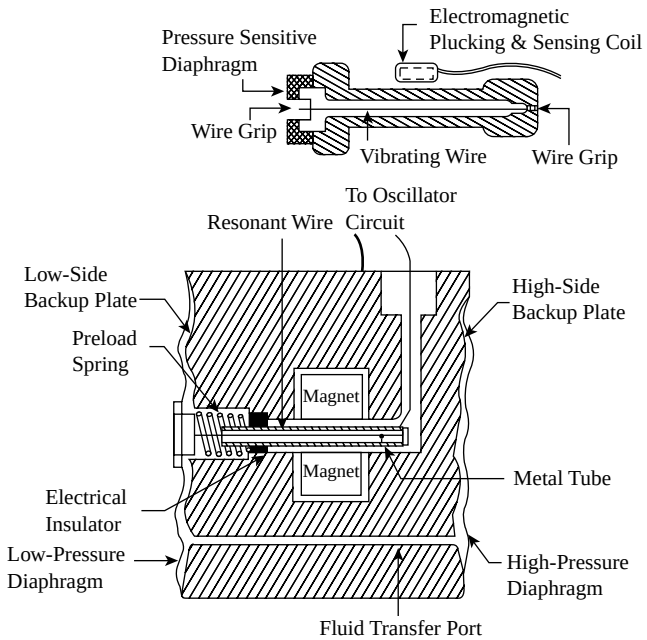

FIG. 5.7k
Resonant-wire-type differential pressure sensor. (Courtesy of Foxboro-Invensys.)

transmits a corresponding force to the wire, excited by the magnetic field. Backup plates support the diaphragms to prevent overpressure damage.

The change in the wire tension modifies the resonant frequency of the wire, which is then digitally counted. Similar configurations are available for the measurement of absolute and gauge pressures. When used as an absolute pressure sensor, the low-pressure diaphragm of Figure 5.7k is covered by a cap and the resulting cavity is evacuated to 0.004 mmHg (0.53 Pa).

The advantages of this design include good repeatability, accuracy, stability, low hysteresis, high resolution, strong output signal, and the generation of an inherently digital signal, which can be sent directly to a stable crystal clock in a microprocessor. The limitations include sensitivity to ambient temperature variations, which requires built-in temperature compensation; a nonlinear output signal; and some sensitivity to shock and vibration.

PIEZOELECTRIC PRESSURE SENSORS

When crystals are exposed to pressures or forces around a particular axis, they are elastically deformed. The experience of deformation produces an electric potential, which results in the flow of an electric charge for a few seconds. As shown in Figure 5.7l, the pressure acting on the sensing diaphragm generates an electrical signal, which is proportional to the amount of force and therefore to the deformation experienced by the crystal. Because the crystal can also be deformed by

© 2003 by Béla Lipták

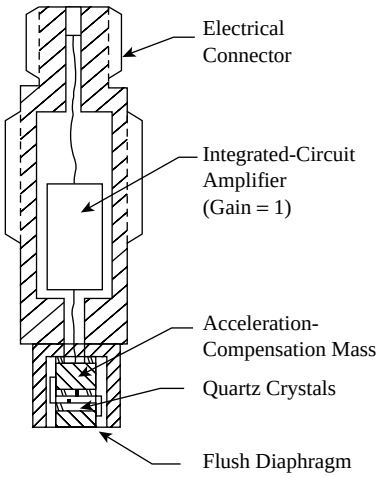

FIG. 5.7l
Piezoelectric pressure sensor provided with an accleration compensator. (Courtesy of PCB Piezotronics Inc.)

acceleration, an acceleration compensator is also provided. These sensors cannot measure static pressures for more than a couple seconds, but are capable of measuring dynamic phenomena such as shock; vibration; pressures associated with blasts, explosions, or pulsation; or the dynamic conditions in rocket motors, engines, compressors, and the like.

Because of the dynamic nature of this sensor, its output is usually expressed in relative pressure units (such as PSIR), where the measurement is referenced to the initial conditions that existed prior to the transient event or to the average of a cycling pressure. Natural or cultured quartz and natural tourmaline are both used as sensors in piezoelectric transducers. Quartz is inexpensive, stable, and insensitive to temperature changes. Tourmaline provides submicrosecond response speeds, which is valuable in blast transducers.

The main advantages of piezoelectric pressure sensors include their small size, rugged construction, high speed of response, and self-generated signal. These sensors are limited to dynamic measurements, are sensitive to temperature variations, and require special cabling and output signal amplification.

MAGNETIC TRANSDUCERS

A number of pressure transducers utilize magnetic phenomenon in converting the elastic movement of a sensor into an electric signal. These magnetic phenomena include induction, reluctance, and eddy currents. As the pressure sensors cause a movement, this changes the inductance or reluctance of an electric circuit. Inductance is the property of an electric circuit which expresses the amount of electromotive force (EMF) induced for a given rate of change of current flow in the circuit. Reluctance is the resistance to magnetic flow, the opposition offered by a magnetic substance to magnetic flux (magnetomotive force).

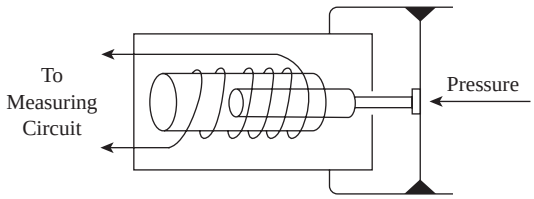

FIG. 5.7m
Schematic representation of a linear motion variable inductance pressure transducer element.

Inductive Elements

Figure 5.7m illustrates a variable inductance element. Here the process pressure moves a magnetic iron core inside a coil, which alters the self-inductance of the coil. The many turns of the solenoid coil are usually wound on a tube of insulating material. As the core is pushed into the solenoid, the inductance of the coil increases in proportion to the amount of metal inside the coil. The ratio inductance element is similar, except that there are two solenoid coils next to each other on the insulating tube and the iron core is always within them. In this design the core movement is detected as a change in the inductance ratio of the two coils. The sensitivity and linearity of the ratio inductance transducers is better than that of the variable inductance units.

As a pressure sensor moves a conductive surface, while the transducing element remains stagnant, the eddy currents cause variations in impedance. Pressure transducers have also been designed to exploit this phenomenon.

Linear Variable Differential Transformer Figure 5.7n illustrates a linear variable differential transformer (LVDT), which can also be called a mutual-inductance element, that operates on the inductance ratio principle. Here three coils are wound onto the same insulating tube containing the high-permeability iron core. Alternating current is applied to the primary coil (P) in the center, and if the core is in the center, equal voltages are induced in the secondary coils (#1 and #2) by the magnetic flux. Usually the secondary coils are wired in series, and therefore when the core is centered, the resulting output is zero. As the core moves to the left or right, the voltage induced in coil #1 or #2 will predominate.

The LVDT-type transducers are also available in the rotary form and can be obtained with ranges from 0–30 to 0–10,000 PSIG (0–210 kPa to 0–70 MPa). Their limitations include mechanical wear and vibration sensitivity.

Inductive Transmitters Figure 5.7o illustrates how the differential transformer design has been adopted for use in a force balance pressure transmitter. The process pressure applied to the elastic element of the unit (not shown) exerts a proportional force on the lower end of the force bar, which pivots on the flexure seal. This force through the levers (shown) is transmitted to an electronic force balance system consisting

© 2003 by Béla Lipták

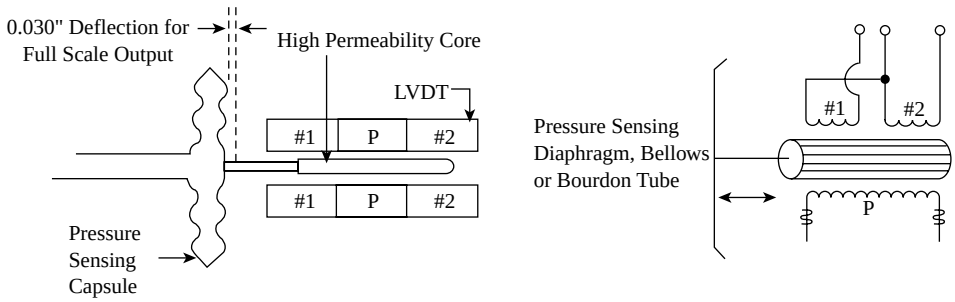

FIG. 5.7n
Linear variable differential transformer.[2]

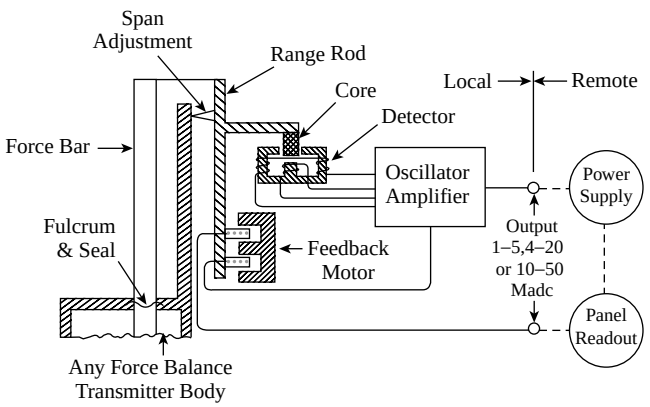

FIG. 5.7o
Differential transformer force balance electronic pressure transmitter.

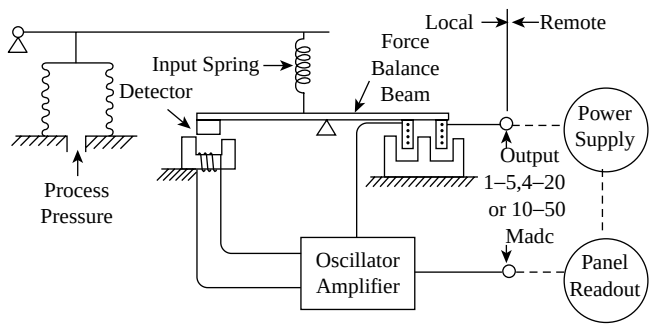

FIG. 5.7p
Inductance electronic force balance pressure transmitter.

of three main components: the detector, the feedback motor, and the oscillator-amplifier. The oscillator-amplifier excites the oscillator.

A change in process pressure results in a slight movement of the laminated core, strengthening the inductive coupling, which increases the secondary voltage to the DC amplifier. The output from the amplifier is fed to the feedback motor in series with the remote readout. As the current in the feedback motor coil increases, an increased force is developed, which repositions the laminated core in the detector. The feedback coil applies an equal and opposite force to that produced by the change in process pressure, and, therefore, maintains the system in continuous force balance.

Figure 5.7p shows a similar electronic pressure transmitter design. Here the elastic sensing element deflects in proportion to the process pressure, thereby exerting a force on the balance beam through the input spring. The resulting motion changes the air gap in the detector assembly. The detector consists of two pieces of ferrite, one mounted on the force beam and the other on the chassis. As the air gap is changed, there is a resulting change in the inductance of the oscillator circuit. When this occurs, the oscillator, acting as a variable resistor, changes the output current correspondingly. The output current is fed through the magnet coil in the feedback motor, producing an equal and opposite force on the beam to balance the force produced by the change in process pressure.

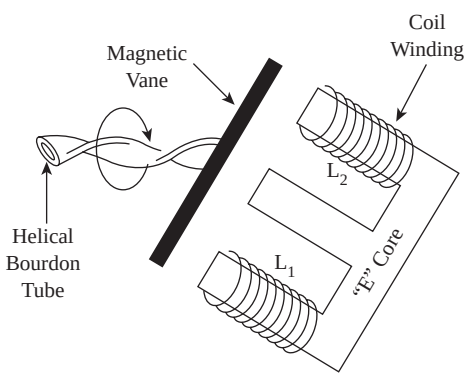

FIG. 5.7q
Variable reluctance pressure transducer.[2]

Reluctive Elements

Electrical reluctance is the equivalent of electrical resistance in a magnetic circuit. Figure 5.7q illustrates a variable reluctance transducer, where a magnetic vane (moved by a helical Bourdon pressure detector) changes the gap in the magnetic flux path of both cores as it moves. The magnetic reluctance varies with the size of these gaps, and the result of the motion of the magnetic vane is a change in the inductance of the two coils (L_1 and L_2). The inductance ratio of L_1/L_2 is therefore related to the process pressure.

© 2003 by Béla Lipták

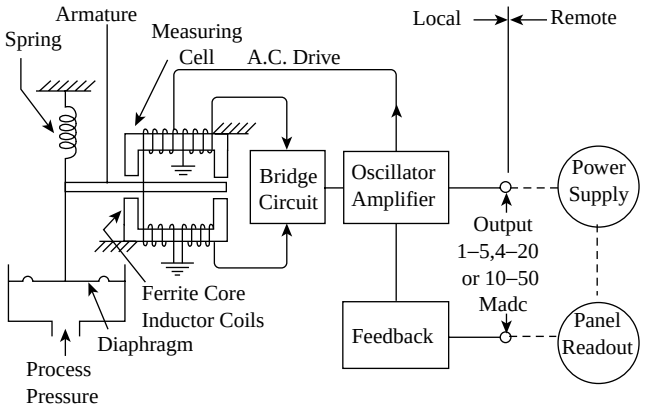

FIG. 5.7r
Variable reluctance electronic force balance pressure transmitter.

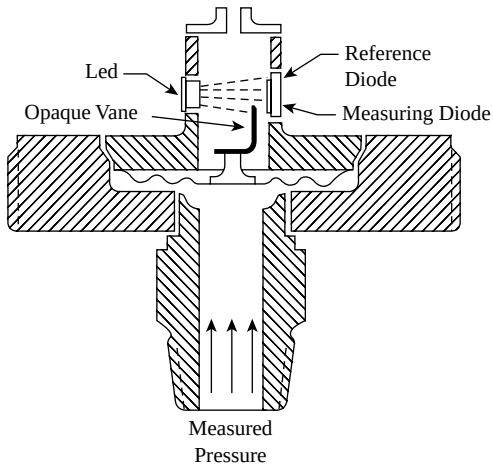

FIG. 5.7s
Optical pressure transducer operates without physical contact and is insensitive to temperature variations. (Courtesy of Dresser Instrument.)

The advantages of the variable reluctance transducers include their wide temperature range, their low sensitivity to shock and vibration (due to their rugged construction), and their high output signal (40 mV/V of excitation). Their disadvantages include their temperature sensitivity (2%/100°F), their requirement for AC excitation, and their susceptibility to stray magnetic fields.

Figure 5.7r illustrates the operation of a variable reluctance electronic transmitter. A change in process pressure exerts a force on the metal diaphragm that moves the armature between two ferrite core coils. The air gap change causes a predetermined change in the inductance ratio of the two coils. The resultant change in core reluctance is detected by the amplifier bridge.

The bridge, in conjunction with the amplifier rebalancing circuits, changes the transmitter output current to flow in direct proportion to the process pressure. The function of the amplifier rebalancing circuit is to change the capacitive reactance of the varactors (voltage sensitive capacitors) in the bridge a like amount. Therefore, the feedback adjusts the varactors so that the capacitance ratio of the two varactors equals the inductance ratio of the two inductors.

OPTICAL TRANSDUCERS

The movement of elastic pressure sensors can also be used to operate optical sensors. As the process pressure moves a diaphragm sensor, which in turn lifts a vane in front of an infrared light beam, the amount of light impinging on the measuring diode[2] varies (Figure 5.7s). A reference diode is also provided to compensate for the aging of the light source (LED) or for dirt buildup on the optics. This transducer is insensitive to temperature variations, as such variations affect the measuring and reference diodes in the same way. Because the amount of movement in the sensor is very small (0.5 mm), both the hysteresis and the repeatability errors are negligible.

SMART TRANSMITTERS

The smart transmitters (see Section 5.1) can also be provided with digital indication and with memory for trending or record keeping. When integrated into a network or into a DCS-, PC-, or PLC-operated system, the calibration steps and the use of stored specifications can all be automated. The calibrator/communicator units range from the palm-sized through the suitcase-sized up to the roll-around packages. Most provide storage of multiple device protocol libraries so that communication is possible with almost any manufacturer's transmitter. Some of the protocols in use, and their year of introduction, include ARCNet (1975), WorldFIP (1988), HART (1989), Foundation Fieldbus H1 (1995), and Profinet (2001).

Smart, microprocessor-based transmitters can be provided with communicators that are integral to or separate from the electronic calibration unit. These communication units allow the operator to modify zeroes or spans, change units, or verify the current values. If a PID algorithm is included in the smart transmitter, the communicator can be used to modify its setpoint or tuning values. Where transmitters are networked into a DCS system, it is not necessary to go to the transmitter to communicate with it. In such installations the individual transmitter can be accessed from the control room or engineer's desk through the data highway.

Establishment of an industry-wide communication protocol for digital control systems (similar to the 3 to 15 PSIG [0.2 to 1.0 bar] or the 4 to 20 mA DC signal ranges that have been developed and accepted worldwide for analog control) still eludes consensus. Nevertheless, sufficient digital bridges and adapters are available so that a completely digital instrumentation system is likely to be possible in any particular plant or system. Also, there are now at least two wireless LAN communication standards, "Bluetooth" and IEEE-802.11b, which may be useful and appropriate for some installations.

© 2003 by Béla Lipták

References

1. Sources and addresses of associations that generate safety standards:
   1a. National Fire Protection Association (NFPA)
   1 Batterymarch Park
   Quincy, MA 02269–9990
   1–800–334–3555
   1b. Factory Mutual Research Corporation (FM)
   1151 Boston-Providence Turnpike
   Norwood, MA 02062
   617–762–4300
   1c. Underwriters Laboratories Inc. (UL)
   333 Pfingsten Road
   Northbrook, IL 60062
   708–272–8800 (Ex. 2612 or 2622)
   1d. Instrumentation, Systems, and Automation Society (ISA)
   67 Alexander Drive
   POB 12277
   Research Triangle Park, NC 27709
   919–549–8411
   1e. National Electrical Equipment Manufacturers Assoc. (NEMA)
   2101 L Street NW
   Washington, D.C. 20037
   1f. Canadian Standards Association (CSA)
   178 Rexdale Blvd.
   Rexdale, (Toronto) Ontario M9WIR3
   416–747–4000
2. Loth, S.E., "Picking the Perfect Pressure Transducer," *InTech*, July 1988.

Bibliography

Babichev, G.G., Kozlovskiy, S.I., Romanov, V.A., and Sharan, N.N., "Pressure Transducers with Frequency Output on the Base of Strain-Sensitive Unijunction Transistors," Paper 2.31, 1st IEEE International Conference on Sensors (IEEE Sensors 2002), Orlando, FL, June 2002.

Bailey, S.J., "Pressure Sensors and Transmitters Affected by Technological Change," *Control Engineering*, January 1984.

von Beckerath, A., Eberlein, A., Julien, H., Kerstein, P., and Kreutzer, J., *WIKA Handbook on Pressure and Temperature Measurement*, U.S. ed., Lawrenceville, GA: Wika Instrument Corp., 1998.

Bradley, C.D., "Semiconductor Strain Gauges," *ISA Journal*, January 1966.

"Capacitance Change Senses Differential Pressure," *Control Engineering*, June 1970.

Comber, J. and Hockman, P., "Pressure Monitoring: What's Happening?" *Instruments and Control Systems*, April 1980.

Demorest, W.J., "Pressure Measurement," *Chemical Engineering*, September 30, 1985.

Dyer, S.A., *Wiley Survey of Instrumentation and Measurement*, New York: John Wiley & Sons, 2001.

Gray, H., "Capacitive Pressure Transducers," *Measurements and Control*, June 1991.

Hall, J., "Monitoring Pressure with Newer Technologies," *Instruments and Control Systems*, April 1979.

Harvey, G.F., "ISA Transducer Compendium," Instrumentation, Systems, and Automation Society, Research Triangle Park, NC, 1969.

Hughes, T.A., "Pressure Measurement," EMC series, downloadable PDF, Instrumentation, Systems, and Automation Society, 2002.

"Improved Online Calibration" *InTech*, December 7, 2001

Instrumentation, Systems, and Automation Society, "Industrial Measurement Series: Pressure" (video VHS, PAL & NTSC), Research Triangle Park, NC, 2002.

Instrumentation, Systems, and Automation Society, "Pressure: Indicators and Transmitters," CD-ROM, Research Triangle Park, NC, 2002.

Johnson, D., "Pressure Sensing: It's Everywhere," *Control Engineering*, April 2001.

Lewis, J.D., "Pressure Sensing: A Practical Primer," *InTech*, December 1990.

Marrano, S.J., "How to Choose and Apply Pressure Transmitters," *Control*, March 2000.

Merritt, R., "Keeping Up With Pressure Sensors," *Instruments and Control Systems*, April 1982.

"Reluctive and LVDT Pressure Transducers," *Measurements and Control*, September 1991.

© 2003 by Béla Lipták

5.8 High-Pressure Sensors

PI High

Flow Sheet Symbol

B. G. LIPTÁK (1969, 1982, 1995, 2003)

Types and Ranges:

A. Optical (Section 5.7), up to 60,000 PSIG (4338 bars)
B. Piezoelectric (Section 5.7), up to 100,000 PSIG (6896 bars)
C. Magnetic (Section 5.7), up to 100,000 PSIG (6896 bars)
D. Dead-weight testers, up to 100,000 PSIG (6896 bars)
E. Helical Bourdon (Section 5.4), up to 100,000 PSIG (6896 bars)
F. Manganin cells, up to 400,000 PSIG (27,586 bars) or more
G. Strain gauge (Section 5.7), up to 200,000 PSIG (13,793 bars)
H. Bulk modulus cells, up to 200,000 PSIG (13,793 bars)
I. Button type pressure repeater, up to 10,000 PSIG (6896 bars)

Inaccuracy:

For dead-weight testers, 0.1% of span or better; for strain gauges from about 0.1% of span to 0.25% of full scale, for Manganin cells from 0.1 to 0.5% of full scale; for pressure repeaters 0.5 to 1% full scale, for helical bourdon tubes 1% of span; for bulk modulus cells from 1 to 2% of full span

Costs:

For types A, B, C, and G, see Section 5.7; for type E, see Section 5.4. Most transducers are from $300 to $500. The simplest dead-weight gauges with moderate ranges and 0.1% inaccuracy cost around $1200 to $1500; the average portable pressure/vacuum calibrator costs around $5000; the most sophisticated 0.03% hydraulic calibrator units cost about $18,000.

Partial List of Suppliers:

3D Instruments LLD (D) (www.3dinstruments.com)
ABB Automation Technology (E) (www.abb.com)
Ametek Inc. (D, E) (www.ametekusg.com)
Ametek Drexelbrook (G) (www.drexelbrook.com)
Barber Colman Industrial (G) (www.barber-colman.com)
Barksdale (G) (www.barksdale.com)
Barton Instrument (G) (www.barton-instruments.com)
Cosa Instrument (D) (www.cosa-instrument.com)
DH Instruments (D) (www.dhinstruments.com)
Dresser Instrument (A, D, E, G) (www.dresserinstruments.com)
Druck Inc. (B, G) (www.pressure.com)
Dwyer Instruments (G) (www.dwyer-inst.com)
Entran Devices Inc. (G) (www.entran.com)
Fisher Controls Int., a Div. of Emerson Process Management (E) (www.emersonprocess.com)
Foxboro-Invensys (E, F) (www.foxboro.com)
Helicoid Instruments Div. of Bristol Babcock (E) (www.bristolbabcock.com)
Honeywell Inc. (E) (www.honeywell.com)
Kistler-Morse (G)
Marsh Instrument Co. (E) (www.marshbellofram.com)
Marshalltown Instruments Inc. (E) (www.marshbellofram.com)
Mensor Corp. (B, E, quartz helix) (www.e-pressure.com)
Mid-West Instrument (E) (www.midwestinstrument.com)
MKS Instruments (D) (www.mksinst.com)
Morehouse Instrument (D)
Moeller Instrument Co. (E) (www.moellerinstrument.com)
Moore Products, now part of Siemens Inc. (E) (www.sea.siemens.com)

© 2003 by Béla Lipták

Noshok Inc. (E) (www.noshok.com)
OCI Instruments Inc. (E) (www.ociinstruments.com)
Palmer Instruments Inc. (E) (www.palmerinstruments.com)
Perma-Cal Corp. (E) (www.perma-cal.com)
Reotemp Instrument (D) (www.reotemp.com)
Rosemount Inc., a Div. of Emerson Process Management (E) (www.emersonprocess.com)
Ruska Instrument (D) (www.ruska.com)
Scanivalve Corp. (G) (www.scanivalve.com)
Senso-Metrics Inc. (G) (www.senso-metrics.com)
Sensotec (G) (www.senso-metrics.com)
Smar International (D) (www.smar.com)
H.O. Trerice Co. (E) (www.hotrerice.com)
Vaisala Inc. (D) (www.vaisala.com)
Validyne Engineering Corp. (E) (www.validyne.com)
Viatran Corp. (G) (www.viatran.com)
Wallace & Tiernan (D) (www.wallace-tiernan.com)
Wallace & Tiernan Inc. (E) (www.usfwt.com)
Weiss Instruments Inc. (E) (www.weissinstruments.com)
Weksler Instruments Corp. (E) (www.dresserinstruments.com)
Wika Instrument Corp. (E) (www.wika.com)
Yokogawa Corp. of America (E) (www.yca.com)

The term *high pressure* is relative, because in an average plant the pressure of 1,000 PSIG (69 bars) is usually considered to be high, while in synthetic diamond manufacturing 100,000 PSIG is viewed as normal. For the purposes of this section, we will define high-pressure instruments as devices that are capable of measuring pressures in excess of 10,000 to 20,000 PSIG (700 to 1,400 bars). Some of these detectors have already been discussed in Section 5.4 (helical Bourdons) and in Section 5.7 (strain gauge, optical, piezoelectric, and magnetic types). Therefore, in this section the emphasis will be on the description of dead-weight piston gauges, bulk modulus, and Manganin cells.

INTRODUCTION

High pressure can be measured by:

1. Dead-weight testers
2. Pressure repeaters
3. Elastic deformation gauges, such as helical bourdon tubes, strain gauges, or bulk modulus cells
4. Detecting the change in electrical resistance in materials like Manganin

One might group these sensors by other characteristics, such as:

1. Mechanical, such as pressure repeaters, helical bourdon tubes, or dead weight testers
2. Electronic, like the strain gauge devices
3. Very high pressure detectors, as the bulk modulus and the Manganin cells.

The only primary high-pressure detector is the dead weight sensor, which is also a rather slow measuring device. The sensors that detect elastic deformation follow Hoke's Law but not with absolute accuracy and all have at least 0.1% hysteresis. The Manganin gauge was first described by the Nobel prize winning physicist Bridgman[1] who recommended it as a secondary gauge.

MECHANICAL HIGH PRESSURE SENSORS

Dead-Weight Piston Gauges

As illustrated in Figure 5.8a, these are piston gauges in which the test pressure is balanced against a known weight that is applied to a known piston area. The test pressure is applied by the secondary piston. The principal purpose of these free-piston gauges is as a primary standard to calibrate other pressure sensors. The National Bureau of Standards (NBS) has been using these devices for many years.

Piston gauges, or dead-weight testers, are normally provided with a number of interchangeable piston assemblies and NBS-certified weights. They can be used to calibrate at pressure levels as low as 5 PSIG (35 kPa) or as high as

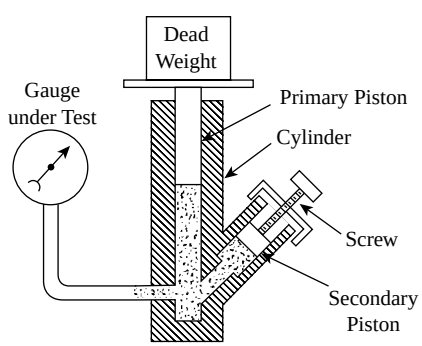

FIG. 5.8a
Dead-weight piston tester.

© 2003 by Béla Lipták

100,000 PSIG (690 MPa). The range has been extended to even greater pressures, but research on piston and cylinder material and their treatment to withstand loads is a limitation. Assuming that one wants to generate a pressure of 100,000 PSIG while keeping the dead weight under 1000 lb (450 kg), it is necessary to reduce the piston area to 0.01 in^2 (6.4 mm^2). This means that a 0.1 in. (2.5 mm) diameter piston will have to support a 1000 lb weight, while also being rotated.

The accuracy of dead-weight piston testers has improved over the years. For higher pressure services, the main improvement resulted from controlling the piston-cylinder clearance by pressurizing the outside surface of the cylinder. Thus, the piston-cylinder clearance is kept constant, resulting in a slow rate of fall for the piston unaffected by pressure level. The laboratory piston gauges are standardized by NBS, calibrating the associated weights and measuring the piston diameter. NBS has found these dead-weight testers to be inaccurate to 1.5 parts in 10,000 of the measured pressure at values greater than 40,000 PSIG (280 MPa) and to 5 parts in 100,000 at lower pressures. The inaccuracy of industrial dead weight testers is better than ±0.1% of span.

The free-piston gauge is limited to its principal purpose, a primary standard for calibrating other pressure sensors, because it is slow in response and is not practical for direct industrial installation.

The utility of the high-accuracy piston gauges is being extended to the lower pressure ranges by the titling-type, air-lubricated designs. With such design, pressures (and pressure differentials) in the millimeter of mercury range have been detected to one part in 100,000 full-scale error.

Button-Type Pressure Repeater

This instrument (Figure 5.8b) is discussed in more detail in Section 5.12. It has been developed for extruder monitoring and control in the plastics and synthetic fiber industries. It can repeat the process pressures within an error of 0.5 to 1%, and it can operate up to 10,000 PSIG (69 MPa) and at temperatures up to 800°F (430°C).

Helical Bourdon

The detailed features of this instrument (Figure 5.8c) are discussed in Section 5.4. The helical elements used in this instrument are available with spans up to 0 to 80,000 PSIG (0 to 550 MPa) and can detect pressures with an error of about 1% of span.

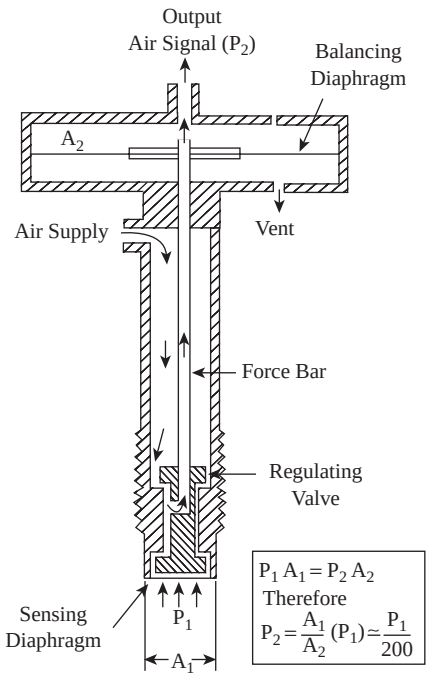

FIG. 5.8b
Button-diaphragm-type pressure repeater.

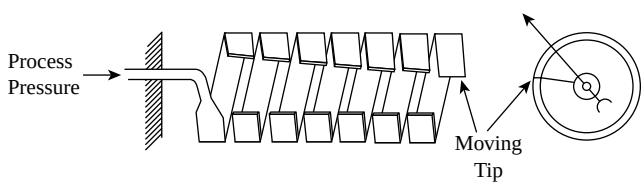

FIG. 5.8c
Helical Bourdon-type pressure sensor.

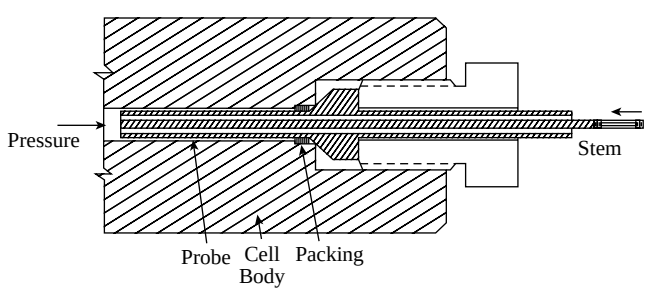

FIG. 5.8d
Bulk modulus cell.

BULK MODULUS CELLS

These cells, shown in Figure 5.8d, are comprised of a hollow cylindrical steel probe closed at the inner end, and a stem that projects beyond the outer end of the probe. When subjected to process pressures, the active part of the probe contracts isotropically, causing its tip to be displaced to the right. As a result, the stem moves outward, increasing the distance it projects beyond the outer end. The stem motion can be detected by electromagnetic pickup, capacitance pickup, or the use of mechanical displacement transmitters (pneumatic or electronic).

The unit is available with ranges of 0–50,000 to 0–200,000 PSIG (0–350 to 0–1,400 MPa), and its inaccuracy is ±1 to 2% of full scale. Its advantages, when compared with other high-pressure sensors, include its relatively fast response, its remote-reading characteristic, and its design that is absolutely

© 2003 by Béla Lipták

safe because the probe is not subject to fatigue. The hysteresis and temperature sensitivity of the bulk modulus cell are similar to those of other elastic element pressure sensors.

PRESSURE-SENSITIVE WIRES

The electric resistance of wires can be changed by applying linear strain or by applying hydrostatic pressure to the surface of a helically wound coil mounted on a core. This second approach is utilized in the operation of the Manganin or gold-chromium wire type pressure sensors. These materials have been selected because their electric resistance changes very little with temperature variations, while it does change appreciably with changes in the applied process pressure.

When a small coil of Manganin wire is subjected to high-process pressures, the coil resistance changes linearly with pressure. The pressure-resistance relationship for Manganin is substantial, positive, and linear, and therefore can be detected by a bridge. Manganin is relatively insensitive to temperature variations.

These cells can be obtained with ranges from 0 to 50,000 PSIG (0 to 3,450 bars) to 0 to 425,000 PSIG (0 to 29,300 bars), and their inaccuracy is between $\pm^1/_{10}$ and $\pm^1/_2$% of full scale.

The main disadvantage of this cell is its delicate nature. Both the gauge coils and the coil protection bellows can be easily damaged by rapid changes in pressure or liquid viscosity.

The pressure-resistance relationship of other materials, such as platinum, gold-chromium, or lead, have some of the same desirable features as Manganin, and they too have been used as elements in pressure-resistance cells.

CHANGE-OF-STATE DETECTION

One other method for high-pressure sensing is to determine the pressure at which change-of-state occurs in various materials and then to apply that as a standard. Some of the change-of-state points have already been determined. For example, it has been established that the melting point of mercury at 0°C is 109,765 ±30 PSIG (757 ±0.2 MPa). Similarly, the first polymorphic transition point of bismuth has been found to be between 365,000 and 370,000 PSIG (2519 and 2553 MPa).

DYNAMIC SENSORS

The interest in dynamic pressure measurement to detect blast pressures, rapid chemical reactions, combustion pressures of rocket propellants, and so on has increased in recent years. Several electronic transducers have been developed for use with elastic elements. Because these devices were covered in Section 5.7, only a brief listing will be given here.

Electronic transducers for dynamic pressure detection include the piezoelectric transducers; the bonded and unbonded strain gauge elements; and the variable reluctance, differential transformer, and electrical capacitance types.

Strain gauges bonded to diaphragm or bellows elements have given good performance in measuring blast pressures. In connection with underwater explosions and noises, piezoelectric crystals have been successfully used. These units are directionally sensitive to force, necessitating a seal interposed between the element and the process and converting pressure to force for optimum response.

Reference

1. Bridgman, P.W., *Physics of High Pressure*, London: G. Bell & Sons, Ltd., New York: MacMillan, 1952.

Bibliography

Babichev, G.G., Kozlovskiy, S.I., Romanov, V.A., and Sharan, N.N., "Pressure Transducers with Frequency Output on the Base of Strain-Sensitive Unijunction Transistors," Paper 2.31, 1st IEEE International Conference on Sensors (IEEE Sensors 2002), Orlando, FL, June 2002.

Bailey, S.J., "Pressure Sensors and Transmitters Affected by Technological Change," *Control Engineering*, January 1984.

von Beckerath, A., Eberlein, A., Julien, H., Kerstein, P., and Kreutzer, J., *WIKA Handbook on Pressure and Temperature Measurement*, U.S. ed., Lawrenceville, GA: Wika Instrument Corp., 1998.

"Bourdon Pressure Gauges," *Measurements and Control*, December 1991.

Buckon, L., "Considerations in Selecting a Pressure Calibration Device," Paper #91–0449, Instrumentation, Systems, and Automation Society, 1991.

Budenberg, G.F., "Dead Weight Pressure Measurement," *Instruments and Control Systems*, February 1971.

Comber, J. and Hockman, P., "Pressure Monitoring: What's Happening?" *Instruments and Control Systems*, April 1980.

Demorest, W.J., "Pressure Measurement," *Chemical Engineering*, September 30, 1985.

Hall, J., "Monitoring Pressure with Newer Technologies," *Instruments and Control Systems*, April 1979.

Hughes, T.A., "Pressure Measurement," EMC series, downloadable PDF, Instrumentation, Systems, and Automation Society, Research Triangle Park, NC, 2002.

Instrumentation, Systems, and Automation Society, "Industrial Measurement Series: Pressure" (video VHS, PAL & NTSC), Research Triangle Park, NC, 2002.

Instrumentation, Systems, and Automation Society, "Pressure: Indicators and Transmitters," CD-ROM, Research Triangle Park, NC, 2002.

Johnson, D., "Pressure Sensing: It's Everywhere," *Control Engineering*, April 2001.

Kaminski, R.K., "Measuring High Pressures Above 20,000 PSIG," *Instrumentation Technology*, August 1968.

Lewis, J.D., "Pressure Sensing: A Practical Primer," *InTech*, December 1990.

Marrano, S.J., "How to Choose and Apply Pressure Transmitters," *Control*, March 2000.

Merritt, R., "Keeping Up With Pressure Sensors," *Instruments and Control Systems*, April 1982.

© 2003 by Béla Lipták

5.9 Manometers

B. G. LIPTÁK (1969, 1982, 1995, 2003), **REVIEWED BY J. WELCH** (1995)

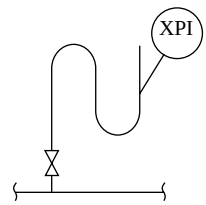

Flow Sheet Symbol

Types:	Liquid sealed designs include the inverted bell, ring balance, U-tube, well type, inclined, float, and barometer types. Laboratory versions include the McLeod and the micro-manometer designs.
Design Pressure:	Generally used in near atmospheric applications, although the float type metallic units are available up to 6000 PSIG (41 MPa).
Design Temperature:	Function of seal fluid, usually near ambient: –70 to 150°F (–57 to 66°C)
Sizes:	Standard lengths from 6 to 140 in. (150 mm to 3.5 m)
Materials of Construction:	Pyrex, brass, steel, aluminum, stainless steel
Ranges:	Minimum span with inclined or micro-manometers is 0 to 0.1 in. (0 to 2.5 mm); maximum span is 60 PSID (0.41 MPa)
Inaccuracy:	Visual manometers can be read within 0.01 in. (0.2 mm); micro-manometers can be read within 0.002 in. (0.05 mm). Special manometers used as primary pressure standards can read within 0.0003 in. (0.001 mm)
Costs:	Laboratory-quality, well-type, glass-tube manometer costs $100 to $150; laboratory-quality, glass U-tube, protected by polycarbonate shield costs about $250; laboratory-quality, glass tube micro-manometer also costs about $250; the cost of National Institutes of Standards and Technology traceable digital manometers with analog or digital outputs range from costs $1750 to $3000.
Partial List of Suppliers:	ABB Inc. (www.abb.com) Druck Inc. (www.pressure.com) Dwyer Instruments Inc. (www.dwyer-inst.com) HyVac Products (www.hyvac.com/products/McLeod) Jumo Process Control Inc. (www.jumousa.com) Kimble Knotes (www.kimble-knotes.com) Meriam Instrument (www.meriam.com) MKS Instruments (www.mksinst.com) Petrometer Corp. (www.petrometer.com) Princo Instrument Inc. (www.princoinstruments.com) Wallace & Tiernan (www.usfwt.com) Yokogawa Corp of America (www.yca.com)

The term *manometer* is used by some people as a name for a variety of pressure detectors, particularly in the vacuum and low-pressure ranges. They include the *wet* pressure detectors, which utilize a working fluid, and *barometers*, which measure atmospheric pressure against a full vacuum reference. Therefore, such devices as the *capacitance manometers* (see Section 5.7) or *quartz helix manometers* (see Section 5.4) are not discussed here. Similarly excluded from this section are the manometric controllers—the cartesian divers and aneroid manostats—because they are covered under vacuum controllers in Section 5.14.

© 2003 by Béla Lipták

INTRODUCTION

Manometers are primary standards of the U.S. National Bureau of Standards and of other standardizing institutions. When so used, their visual reading scales are often replaced by capacitance or sonar devices to provide better precision. In order to achieve primary standard precision, it is necessary to compensate for capillary effects; variations in gravity by location; fluid compressibility; and temperature expansion of the filling fluid, which affects its density and thermal expansion of the readout scale.

There are two major groups of wet pressure instruments: the liquid-sealed and the liquid manometer. The liquid-sealed category includes various bell designs and the ring balance units. The liquid manometer group is subdivided into visual and float types. There are a variety of visual manometers, including barometers; well, U-tube, and inclined tube manometers; and micro-manometers.

Barometric pressure can also be detected by bellows type instruments, which are provided with a sealed-in vacuum reference. These differential pressure sensing bellows are usually coupled to the core of a linear variable differential transformer (LVDT), which generates the required electronic output signal as discussed under Weather Stations in Section 7.23.

The simplest design is a U-tube with one leg connected to an evacuated reference chamber, while the other is exposed to the unknown process pressure. The difference between the two column heights indicates the process vacuum. The precision of reading the manometer is limited to about 0.1 mm when detected by the naked eye. Inclining the manometer tube and using lower-density filling fluids (low-vapor-pressure oils) can improve the sensitivity of the readout to about 10 mtorr. When the units are operated at constant temperatures and are provided with micrometer readouts, vacuums down to the 1 mtorr level can be detected.

The main advantage of manometers is their simplicity and low cost. Their limitations include possible vaporization of the filling fluids at high vacuums or at high temperatures. Density variation and light refraction can make it difficult to read the gauge. Other disadvantages include the toxic nature of mercury; their moving parts, some of which are exposed to the process; their relatively high installation costs; and the various limitations caused by corrosion, temperature, chemical reaction, or plugging.

LIQUID-SEALED DESIGNS

Inverted Bells

In all inverted bell devices, the bell dips into a sealing liquid and generates a vertical motion as a function of the pressure differential acting on the inner and outer surfaces of the bell. The bell motion might be balanced against a calibration spring or by the weight of the bell. Depending on the pressure on the reference side of the bell, this device can detect absolute, positive, negative, or differential pressures.

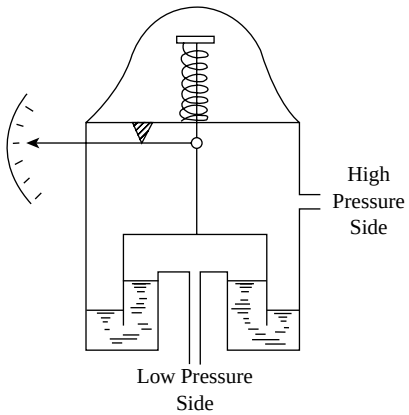

FIG. 5.9a
Inverted bell d/p detector.

Variations include single- and double-bell units, mercury- and oil-sealed types, and designs in which the vertical bell motion is linearly or square-root-related (Ledoux) to the pressure differential sensed.

Cylindrical and Ledoux Bells Figure 5.9a shows the operation of the single cylindrical bell design. If the underside of the bell is evacuated by a vacuum pump, with this full vacuum reference, the unit will detect absolute pressures. If the reference side is left open to the atmosphere, the instrument will measure pressures above or below atmospheric pressure. By changing the calibrated spring, which normally is a temperature-compensated helix, the range of the unit can also be changed.

These instruments are mainly used to measure low-pressure differentials. The two well-known members of this family are the cylindrical and the Ledoux bell designs. Figure 5.9a illustrates the operation of the cylindrical bell unit. Here, the force developed by the differential pressure (d/p) acting on the bell is opposed by a spring. The resulting bell motion is a measure of the pressure differential. Because a large bell acts as a force amplifier, even a small differential can generate a sizeable force to drive the readout mechanism. Depending on design and the type of seal fluid used, these units can respond to full-range differentials from 1 to 15 in. H_2O (from 0.25 to 3.8 kPa) and can withstand substantial static pressures.

The Ledoux inverted bell is different from the cylindrical design in two important aspects. Instead of a spring, the pressure differential on the bell is balanced against the weight of the heavy bell as it rises and falls in the seal fluid, which is normally mercury. Also, the bell is shaped so that its motion corresponds to the square root of the pressure differential acting upon it. This feature makes it suitable to d/p flow measurement, when an inherently linear output signal is desired. The unit can detect differentials up to 200 in. H_2O (50 kPa) can be installed to operate at up to 6000 PSIG (41 MPa) static pressure.

© 2003 by Béla Lipták

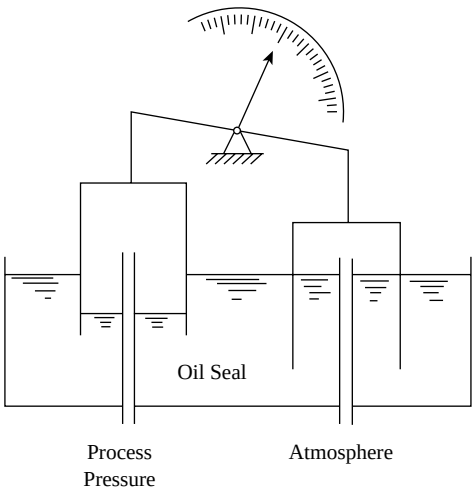

FIG. 5.9b
Double inverted bell manometer.

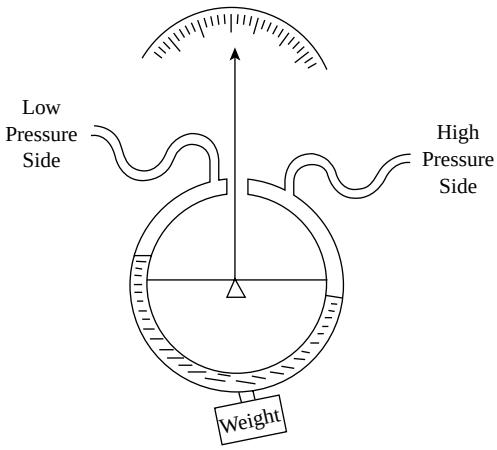

FIG. 5.9c
Ring balance d/p sensor.

Double Bell Unit Figure 5.9b illustrates a double-bell unit, one of the most sensitive pressure sensors when measurement of near-atmospheric pressures is required. It can also be used as a d/p detector with the two process pressures connected to the underside of the two bells. As a result of a change in d/p, one of the bells moves up and the other down in direct proportion to the d/p detected. In this design, there is no calibration spring because the weight of the bells balances the pressure differential.

When the bell is shaped so that its vertical motion corresponds to the square root of the pressure differential acting on it, the resulting signal is linear with volumetric flow rate through orifice elements.

All inverted bell units have the common desirable feature that the large bell area generates ample power to operate the mechanical motion detector levers even at very low process pressures. These units are made of materials that are normally suitable for noncorrosive services only, and the process media have to be compatible with the seal fluid used. Their inaccuracy is ±1% of span (Ledoux is ±2%), and they are bulk units sensitive to ambient temperature variations.

The depth of the sealing fluid determines the maximum d/p these units can withstand. If that limitation is exceeded, the seal fluid will be blown out. The same limitation exists for the measurement of static pressures with vacuum or atmospheric references. When the unit is used for differential pressure sensing, the static pressure limitation is determined by the design of the housing. In the Ledoux bell design, housings can withstand up to 6000 PSIG (41 MPa) service pressures. The spans available with the Ledoux bells are higher (up to 200 in. H_2O, or 50 kPa) than the others. The minimum span available with the cylindrical bells is 0.15 in. H_2O (0.038 kPa), and the maximum is about 15 in. H_2O (3.8 kPa). The actual range can be high-vacuum with vacuum-pump reference or near-atmospheric with open-vent reference. Compound ranges are also available.

Ring Balance Manometers

These meters (see Figure 5.9c) have been widely used in Europe but have found limited acceptance in the United States. Their application and operating principles are the same as those of the inverted bell meters. A tubing ring formed in the vertical plane is pivoted at its central axis, and the pressure differential rotates this ring. The opposing torque is developed by a weight attached to the ring.

Depending on the design and the filling fluid used, the minimum span for these units is 0.2 in. H_2O (0.05 kPa) and the maximum span is 500 in. H_2O (125 kPa). Depending on the reference pressure used, it can detect absolute or near-atmospheric pressures. Although the housings can withstand up to 6000 PSIG (41 MPa), the pressure differential between reference and process pressure should be below that limit, which would cause the sealing fluid to be blown out. Also at high pressures the flexible connections at the sensing leads become a source of errors and require constant maintenance.

McLeod Vacuum Gauges

The McLeod vacuum detector, or barometer gauge, operates by trapping a definite volume of low-pressure gas and compressing this volume with a fixed pressure. The pressurized new volume is then read as a measure of the initial absolute pressure. If the reading is taken at constant temperature, Boyle's Law applies: $V_1P_1 = V_2P_2$. Here P_1 the initial pressure of the rarefied gas is given on the instrument scale, having been calibrated on the basis of $P_1 = P_2V_2/V_1$. The McLeod gauge is considered to be a laboratory standard for calibrating other types of vacuum detectors.

90° Rotation Type Figure 5.9d illustrates the standard 90-degree rotation McLeod gauge. Before measurement, a known volume of mercury is placed into the gauge reservoir, as shown at the left side of the sketch. Then the gauge is connected to the vacuum system to be detected and is rotated

© 2003 by Béla Lipták

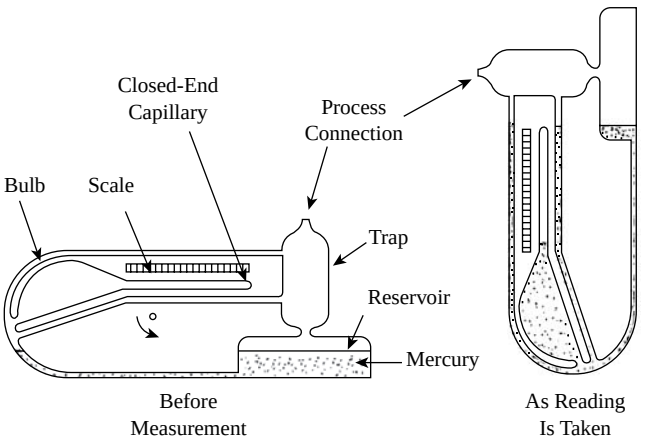

FIG. 5.9d
90-degree rotation McLeod vacuum gauge.

90 degrees, thereby trapping a fixed volume of rarefied gas (the volume of the bulb and capillary), which is compressed by the column of mercury shown at the right side of the sketch. The level to which the mercury rises in the capillary is read on the scale that has been calibrated per Boyle's Law to read in units of initial pressure.

This device has no moving parts, so friction, inertia, or hysteresis does not affect the measurement, making it as basic a measuring instrument as a manometer. Assuming constant temperature and proper quantity of filling mercury, the only limitation of the unit is due to capillary effects. Below 10^4 mmHg, accuracy is affected because it is hard to obtain a flat mercury surface free from capillary effects even at the highest practical compression ratio.

Piston-Type McLeod Gauge Figure 5.9e shows an improved version of the McLeod gauge. In this design, the unit is stationary, and a piston is used to trap in the rarefied gas. One of the advantages of this unit is that it does not use a dead-ended capillary, and, therefore, the problems associated with keeping the capillary clean are eliminated. At the left side of the sketch, the unit is shown just prior to the taking of a measurement. As the piston with micrometer adjustment is moved up, the rarefied gas is trapped when the mercury reaches point D; thus, the initial volume (V_1) is the volume between points A and D. The filling of the gauge with mercury is done through the process connection. It runs down into the well, up the capillary, and syphons over through the bulbs into the reservoir. When the syphon breaks, the mercury level is at point A.

When the instrument is connected to the vacuum system, the mercury level in the reservoir is below point D to allow trapped gases to be liberated. As the piston is moved up, the mercury fills the large bulb up to point C. Here a reading can be taken on the dual scale if the pressure to be detected is in the mmHg range. If the vacuum is higher, the piston is moved further up, increasing the compression ratio until the mercury reaches point B above the small bulb. In this case, the reading is taken on the micron side of a dual scale.

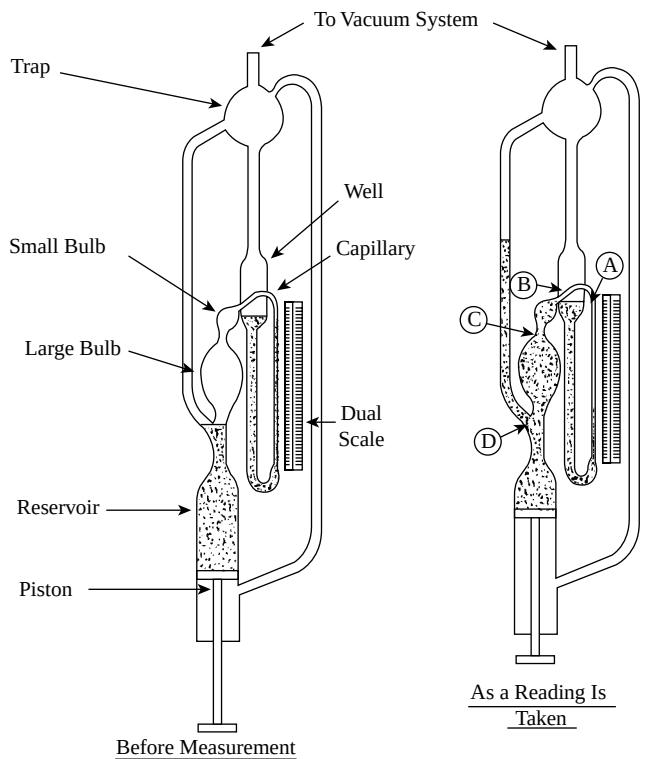

FIG. 5.9e
Piston McLeod gauge.

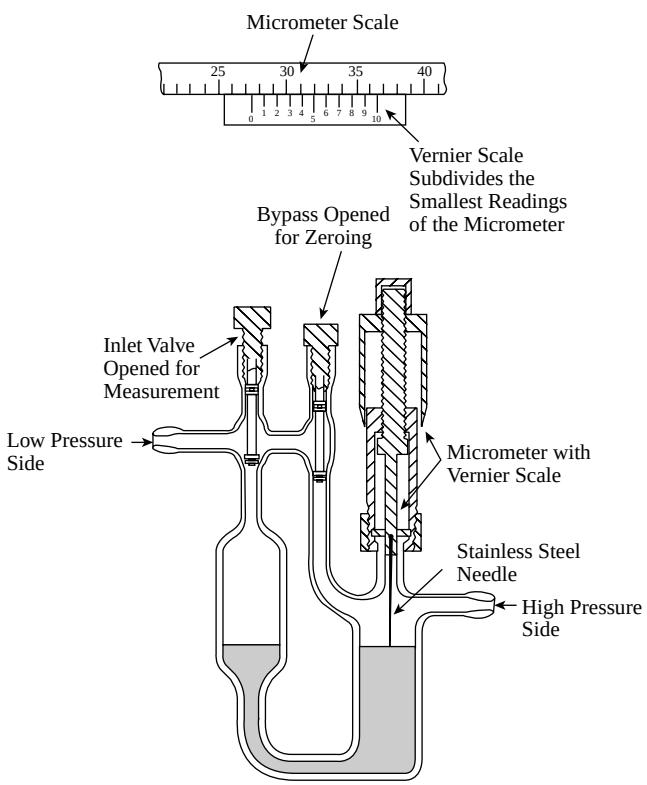

FIG. 5.9f
Micrometer needle position is displayed on a vernier scale for better visibility.

© 2003 by Béla Lipták

McLeod gauges can cover the vacuum range between 1 and 10^{-6} mmHg (133 and 1.3×10^{-4} Pa). At pressures below 10^{-4} mmHg (1.3×10^{-2} Pa), the reading accuracy is limited by capillary effects. This device is a laboratory instrument that measures on a sampling rather than on a continuous basis, but it is also available for industrial installations where a rugged case is required. No remote readout devices are available. Condensation as a result of compression of the gases can contribute to inaccuracy; therefore, it is desirable to condense and trap the condensable vapors before they are admitted into the gauge.

Micromanometer With Precision Needle As a micromanometer, the gauge can be provided with a precision needle with 20 turns/in., which is lowered until the needle touches the surface of the filling fluid. The position of the needle is shown on a vernier scale, which provides for fine adjustment and readout. The range is usually 0 to 2 in. (50.8 mm) and the reading accuracy is about 0.002 in. (0.05 mm). Both legs are made of large-diameter, precision-bore glass tubing to minimize capillary effects, and the two vapor spaces are connected through a bypass valve that allows for zeroing the instrument.

VISUAL MANOMETERS

Indicator Fluids

The performance of any manometer installation is largely a function of the indicating fluid selected. It has to satisfy several criteria, which in many cases are hard to meet. The filling fluid has to be chemically inert and compatible with the process media and produce a clear, visible interface. The fluid should not coat the glass tube and should not be corrosive to standard materials, such as copper-bearing alloys, aluminum, or steel. Its surface tension should be low to minimize capillary effects, and it should be stable so that no flashing occurs under higher operating temperatures or vacuum conditions.

Similarly, the filling fluid should not freeze due to low ambient temperatures. In general, manometer fluids are available for an operating temperature range of –70 to 150°F (–57 to 66°C). The most important characteristic of a good manometer fluid is its ability to maintain density unaffected by temperature variations, so that the height of its column is a reproducible measure of process pressure. Standard filling fluids are available in a variety of colors covering a specific gravity range of 0.8 to 13.6. None of them satisfies all the requirements listed above; therefore, they have to be selected separately for each installation.

Liquid Barometers

The liquid barometer is a fundamental instrument for detecting atmospheric pressure that is used for precise measurements and for calibration of other sensors. As shown in Figure 5.9g, a glass tube that is open on one end is filled with mercury and then inverted into an open mercury bath. The height of the resulting column in the tube is a measure of the barometric pressure in millimeters of mercury. Accuracy is affected only by the visibility of reading and by capillary effects in the tube. The barometer will act as an absolute pressure sensor if it is well connected to the process.

Glass Tube Manometers

Liquid manometers are the simplest d/p detectors, while at the same time they are economical and accurate. Their main limitations relate to their mechanically fragile nature and to the use of toxic mercury as the working fluid. When local visual indication is sufficient and the static pressures are compatible with the transparent tube design, the glass tube manometers can be considered.

U-tube and well manometers are available in lengths of 6 to 140 in. (150 mm to 35 m). Depending on the density of the manometer fluid used, they can read pressure spans from 5 in. H_2O to about 60 PSIG (1.25 to 410 kPa). The commonly available manometer filling fluid specific gravities are 0.827, 1.00, 1.75, 2.95, and 13.56.

Figure 5.9h illustrates the most elementary type of manometer, the U-tube. The difference between the two columns of liquid is an indication of the pressure differential. There are no moving parts and no friction or inertia involved in the measurement; therefore, its accuracy is limited only by the visibility of the scale.

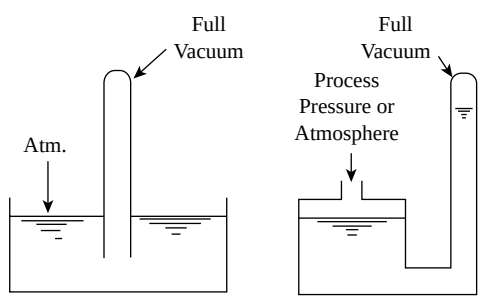

FIG. 5.9g
Liquid column manometer.

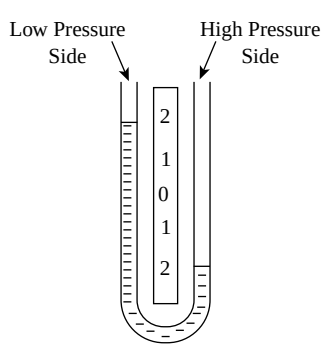

FIG. 5.9h
U-tube.

© 2003 by Béla Lipták

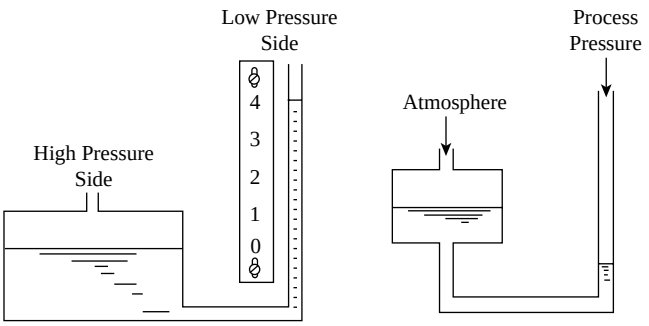

FIG. 5.9i
Raised well-type manometers for the detection of positive (left) and negative (right) pressures.

Well-Type Design An easier-to-read scale can be attached to the well manometer, when the liquid surface area on the high-pressure side is 1000 or more times greater than the area on the low pressure side. Therefore, changes in d/p cause variation only in the column height on the low side, as shown in Figure 5.9i, but leave the high side level practically unaffected. Changes in well liquid level are compensated for by sliding the scale zero to match this level.

The filling fluid is selected on the basis of its chemical inertness to the process materials it comes in contact with. Also important is its compatibility with the process temperature expected, so that it will not freeze or vaporize under operating conditions.

Glass tube manometers are available with up to 120 in. ranges (30 kPa), which is sufficient for most level applications, if the filling fluid is mercury. Design pressure up to 1000 PSIG (6.9 MPa) can be obtained, but their use is discouraged because of mechanical hazards. Because of these considerations and because of the toxicity of mercury, glass tube mercury manometers are no longer used in the processing industries.

The standard construction materials for manometers include brass, steel, aluminum, and stainless steel for the metallic wetted parts, and Pyrex glass for the tube. The glass tube with 1/4 in. (6.3 mm) inside diameter can be exposed up to 400 PSIG (2.8 MPa) pressure, while the extra heavy-wall tube with 1/8 in. (3.1 mm) inside diameter is designed to withstand 2000 PSIG (14 MPa). These pressure ratings must be qualified in two respects.

First, they do not take mechanical damage into consideration. Therefore, if the process material is toxic, hazardous, or should not be allowed to escape for other reasons, glass tube manometers should not be used, even at low operating pressures. Second, the static pressure limitations apply only when the manometer detects pressure differentials. When its purpose is straight pressure measurement, the manometer fluid will be blown out if its range is exceeded. To prevent this from occurring, check valves or return wells can be provided, which will block or collect the seal fluid.

Vacuum Measurement When below-atmospheric pressures are to be detected, two designs can be considered. One is the barometer illustrated in Figure 5.9g, which will give readings in absolute pressure units based on its full-vacuum reference.

The other option is to raise the manometer well (see the right side of Figure 5.9i) and connect the atmospheric reference to the well. This way the manometer will measure negative process pressures relative to atmosphere. In some designs, the well elevation is adjustable, allowing for varying the manometer range from vacuum to compound or to positive pressure detection.

Multitube and Interface Manometers Figure 5.9j illustrates a multitube manometer with atmospheric reference. Up to 50 tubes can be packaged in a common bank; thus the same number of process pressures can be detected from the same reference well. If desired, some or all of the tubes can be provided with separate wells for flexibility.

The accuracy of measurement is largely a function of the operator's ability to read precisely the height of the liquid column. For this reason, designs have been developed that tend to amplify the reading by the use of vernier scales, magnifying eye pieces, or other techniques. One of these units is shown in Figure 5.9k. This design is also called the double inverted-well manometer. If the left leg is filled with a manometer fluid of 1.0 density and the right leg with a fluid of 0.9 density,

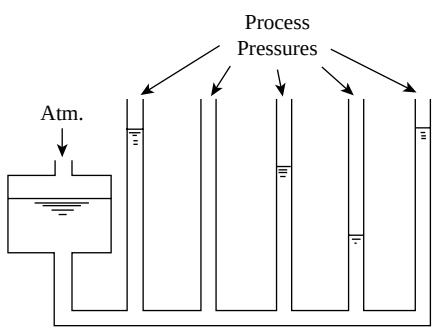

FIG. 5.9j
Multitube manometer.

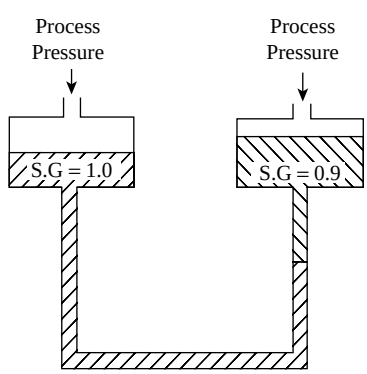

FIG. 5.9k
Double liquid balance manometer.

© 2003 by Béla Lipták

the movement of interface between the two will be 10 times that of a U-tube manometer filled with water.

Inclined Tube Designs If the vertical tube of a well manometer is laid down into an inclined, almost horizontal position, so that a slight change in process pressure will cause a large movement of liquid column, the reading visibility will be improved. With this design, illustrated in Figure 5.9l, full spans of 0.5 to 4 in. H_2O (0.13 to 1 kPa) are available.

Manometers are normally mounted close to the point of measurement to reduce lag time. They are available for bench, wall, or panel mounting, although in modern plants, remote panel-mounted manometers have been replaced by transmitter-receivers. This is desirable not only from space and time-lag point of view, but also for safety reasons in order to prevent process materials from entering the general purpose central panel. When the pressure to be measured is unsteady, pulsation dampeners are installed to steady the indicating column for better readability.

Visual manometers are normally used only as direct indicators, but they can also be provided with switches to detect the level of indicating fluid in the tubes. For this purpose, either photo cells or electric conductivity switches are installed that actuate alarms, solenoids, or any other electrical devices.

Micromanometers

The inclined and the double liquid balance manometers (Figures 5.9k and 5.9l) are capable of amplifying the movement of the manometer fluid column by an order of magnitude. The micromanometer illustrated in Figure 5.9m achieves the same thing, but its amplification capability is much greater.

The unit consists of two large-diameter tubes connected by a small-bore capillary. The capillary either contains an air bubble to indicate filling fluid movement, or the two large-diameter tubes are filled with two nonmixing liquids of different colors,

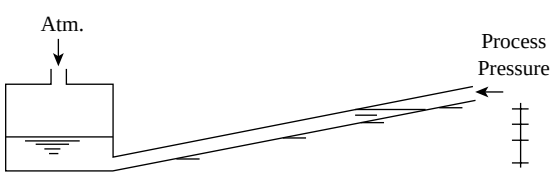

FIG. 5.9l
Inclined manometer.

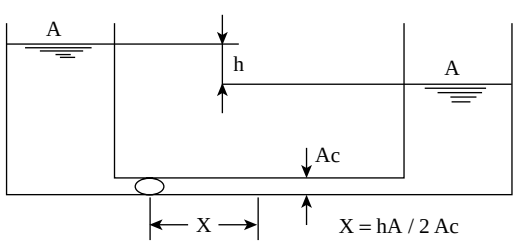

FIG. 5.9m
Micromanometer.

in which case fluid movement is indicated by interface travel. When both wells are exposed to the same pressure, the air bubble comes to rest in the center. Then if one of the wells is connected to the process, the difference between that and the atmospheric reference causes fluid movement from one well to the other, developing a head differential. If we call the well cross-sectional area A and the capillary bore area Ac, the resulting movement of the bubble in the capillary can be expressed as:

$$X - hA/2Ac \qquad \textbf{5.9(1)}$$

Consequently, the head motion has been changed into air bubble motion and has been amplified by the factor A/Ac. This ratio is limited only by the selection of tubes and can be as high as 100:1 or 1000:1. If the operator is capable of determining the bubble position to an accuracy of 1 mm, the actual pressure can be read to an accuracy of $\pm 10^{-2}$ or $\pm 10^{-3}$ mm H_2O. Depending on the reference pressure, this device can then be used for the sensing of near-atmospheric, absolute, or differential pressures. Its performance as a high-vacuum sensor is a function of the quality of the vacuum reference available.

The speed of response of this instrument is relatively slow because the smaller the bore of the capillary, the longer it takes for the bubble to assume its final position. At the same time, small capillaries are desired to prevent fluid leakage between the bubble and the capillary.

FLOAT MANOMETERS

When remote readouts are required or when the process material is hazardous or is at high pressures, float manometers are used. In these units (Figure 5.9n), the variations in pressure differential cause the level of filling liquid to change, and the float moves with the changing level. The float motion is brought out of the chamber by a lever rotating in a pressure seal bearing. Other designs are also available using torque tube or magnetic followers. The lever rotation can be used to drive local indicators or transmitting devices for remote readout.

These instruments can be exposed to static pressures up to 6000 PSIG (41 MPa) and can detect pressure differentials

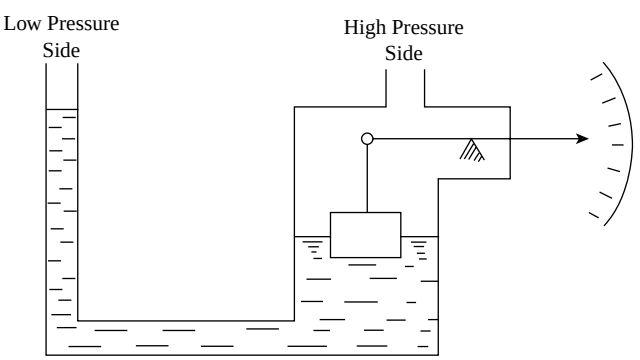

FIG. 5.9n
Float manometer.

© 2003 by Béla Lipták

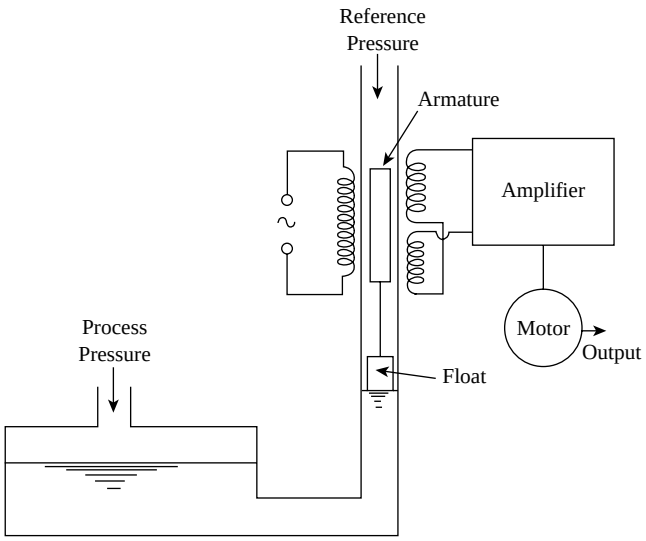

FIG. 5.9o
Metallic tube servomanometer.

from 20 to 1000 in. H_2O (5 to 250 kPa). Lower differentials are not practical from an accuracy point of view, and higher ones would require excessively long reference chambers.

For high precision at static pressures up to 10,000 PSIG (69 MPa), stainless steel U-tube manometers have been used with magnetic floats in both legs. The float positions are detected by electric coils and provide precise measurements of differential pressure.

Figure 5.9n shows the features and the operation of these instruments. When used as a pressure sensor, the process pressure is connected to one side of the manometer and a reference pressure to the other. If the reference pressure is atmospheric, the float movement is related to the pressure differential between the process pressure and atmosphere. Spans are available from 20 to 1000 in. H_2O (from 5 to 250 kPa). The range can be set for positive, negative, or compound pressure detection. Housing is available for up to 6000 PSIG (41 MPa). Measurement inaccuracy is ±1% of span.

Servomanometers

If the float housing is cylindrical, the float motion is linearly related to the pressure differential sensed. By forming the housing tube to variable parabolic cross-sections or other shapes, any desired nonlinear relationship between pressure differential and float motion can be achieved. When precision measurements are required in the area of ±0.05% of reading, the servomanometer illustrated in Figure 5.9o can be considered. The tube of this instrument can be either glass or stainless steel when mechanical strength is desired. The principle of operation is as follows.

Process pressure variations result in float movement that repositions the magnetic armature. A servomotor serves to continuously center a differential transformer about the armature. The shaft position in the servo-transmission is used as a measure of the liquid column height in the manometer tube.

CONCLUSIONS

The main advantages of manometers are their high accuracy, low cost, and simplicity. The measurement precision is limited only by the operator's ability to accurately read the height of the liquid column and by the compensation available for capillary, thermal expansion, and fluid compressibility effects. The main limitations of manometers are related to the potential for mechanical damage and to the problems associated with the filling fluids. There are many processes in which the use of glass is not allowed because toxic or hazardous materials would escape if the glass were to break. The filling fluids themselves also limit the use of manometers. This includes the toxic nature of mercury and the problem of manometer fluid blowout under high-pressure conditions. This second problem can be reduced, but not eliminated, by the use of check valves and return wells.

The filling fluid must be selected for the particular application so that it will not react with the process fluid and will produce a clear and visible interface. If should be stable (should not freeze, flash, or vaporize) under the operating temperature and vacuum conditions, and it should have low surface tension (capillary effect) and low thermal expansion. For high-precision measurements, constant temperature operation or thermal compensation is needed.

Bibliography

von Beckerath, A., Eberlein, A., Julien, H., Kerstein, P., and Kreutzer, J., *WIKA Handbook on Pressure and Temperature Measurement*, U.S. ed., Lawrenceville, GA: Wika Instrument Corp., 1998.

Burka, E.S., "Micromanometers," *Instruments and Control Systems*, September 1964.

Comber, J. and Hockman, P., "Pressure Monitoring: What's Happening?," *Instruments and Control Systems*, April 1980.

Dyer, S.A., *Wiley Survey of Instrumentation and Measurement*, New York: John Wiley & Sons, 2001.

Figliola, R.S. and Beasley, D.E., *Theory and Design for Mechanical Measurements*, 3rd ed., New York: John Wiley & Sons, July 2000.

Hall, J., "Monitoring Pressure with Newer Technologies," *Instruments and Control Systems*, April 1979.

Herceg, E.E., *Handbook of Measurement and Control*, Pennsauken, NJ: Schaeviz Engineering, 1972.

Hughes, T.A., "Pressure Measurement," EMC series, downloadable PDF, Instrumentation, Systems, and Automation Society, Research Triangle Park, NC, 2002.

"Improved Online Calibration," *InTech*, December 7, 2001.

Instrumentation, Systems, and Automation Society, "Industrial Measurement Series: Pressure" (video VHS, PAL & NTSC), Research Triangle Park, NC, 2002.

Johnson, D., "Pressure Sensing: It's Everywhere," *Control Engineering*, April 2001.

Latham, J., "Manometers: Still Widely Used in Industry," *Measurements and Control*, October 1991.

Meriam, J.B., "Manometers," *Instruments and Control Systems*, February 1962.

Stockdale, R., "Advanced Pressure Sensor Designs," *Control Engineering*, June 1990.

Utterbach, N.G., "Reliable Submicron Pressure Readings with Capacitance Manometer," *Review of Scientific Instruments*, July 1966.

© 2003 by Béla Lipták

5.10 Multiple Pressure Scanners

J. D. GOODRICH (1972) **B. G. LIPTÁK** (1982, 1995, 2003)

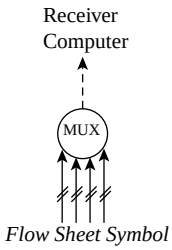

Flow Sheet Symbol

Design Variations:	A. Scanner: rotary B. Scanner: electronic with calibration C. Distributor: rotary D. Distributor: manifold
Applications:	Compressor Testing, Turbine and Boiler Testing, Process Monitoring, Wind Tunnel Testing, Aircraft Flight Testing
Inaccuracy:	A, C, D. ±0.05% with calibration, ±0.1% without B. From ±0.05 to ±0.25% of full scale, as a function of scanning rate and calibration
Data Acquisition/ Distribution Rate:	A. 15 to 20 ports/sec per module B. 10,000 channels/s C. 3 s/point
Cost:	A. $125/point or $8000 for 64 points B, C, D. about $250/point
Partial List of Suppliers:	Foxboro-Invensys (C) (www.foxboro.com) Pressure Systems (B) (www.psih.com) Scanivalve Corp. (A, B, D) (www.scanivalle.com) Texas Instrument (A, B) (www.instrument.com/pci/dasport)

INTRODUCTION

If large numbers of pressures are to be monitored, the sequential scanning of the pressure signals can reduce the total cost of the monitoring system. In aircraft, wind tunnel, and compressor testing or in other applications, where the process materials are air or inert gases, the pressure signals can be connected directly to the scanners. In such applications, the scanned pressures are connected and measured in sequence, by shared transducers, which than transmit their values in analog or in digital form over data buses and networks.

Another application is to integrate a pneumatically instrumented existing plant into a computerized processing facility. In such cases, a large number of analog pneumatic signals need to be converted into their digital electronic equivalents. Figure 5.10a illustrates two alternate methods of providing the required interfacing.

Alternate A illustrates the less expensive solution, where the pneumatic signals are multiplexed prior to being converted into their electronic equivalents; in alternate B, the multiplexer is on the electronic side. Consequently, in alternate B, a P/I

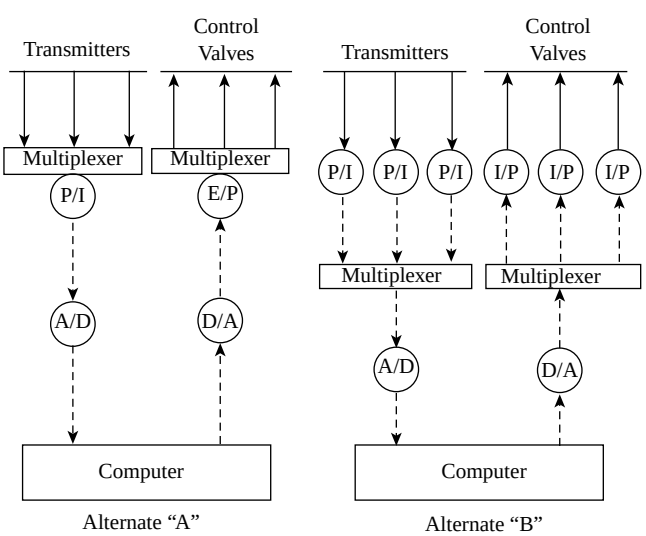

FIG. 5.10a
Alternate methods of computer interfacing for pneumatic systems.

© 2003 by Béla Lipták

converter has to be provided for each pneumatic signal, while in alternate A the converter is shared between many pneumatic signals. Therefore, alternate A accomplishes the same interfacing with a substantially lower investment. In addition, alternate A is likely to also provide better measurement accuracy (0.1% of full scale), because one can afford to pay for one high-quality transducer, which is then used on a time-share basis.

ROTARY PRESSURE SCANNERS AND DISTRIBUTORS

Figure 5.10b illustrates a rotary pneumatic selector with a 0.016 cm^3 switching volume. This is the volume of the rotating U-tube that connects the individual signals to the common transducer in the middle. This pneumatic multiplexer can scan 48 or 64 input signals, and if one of the ports is used for span and one for zero calibration, the pressure transducer can be automatically recalibrated on every scan. Because of the small volume of the rotating U-tube, the response time is less than 50 ms, which theoretically allows a scanning speed of up to 20 samples/s and in practice provides a speed of about 15 pressure signals/s.

The mechanical-drive mechanism is rated at 6 steps/s for continuous duty, in order to limit maintenance. Presently the mean time between failure for pneumatic multiplexers is between 1 and 2 years. Based on that expected performance, it is advisable to replace the scanner module every 3 to 5 years, if the duty cycle is one scan per minute.

Scanning Frequency

All repetitive scanning programs are a form of ring scan; that is, a series of channels are scanned in sequence with the procedure being repeated on some time base. Therefore, it is advantageous to let the hardware do the scheduling of the scan as the valve steps successively from port 0 to port 63 and back to 0. For example, if one signal needs to be looked at very frequently, it can be connected to several of the 64-ports of the multiplexer.

If it is necessary to speed up the sampling time of a large number of signals, the number of ports per multiplexer must be reduced. Two multiplexers, each with half of the ports, would double the scan speed, three would triple it, and so on.

Differential Pressure Scanning

When large numbers of orifice or pitot tube type flow elements are to be monitored, a pair of rotary scanner modules are used with a single differential pressure transducer mounted

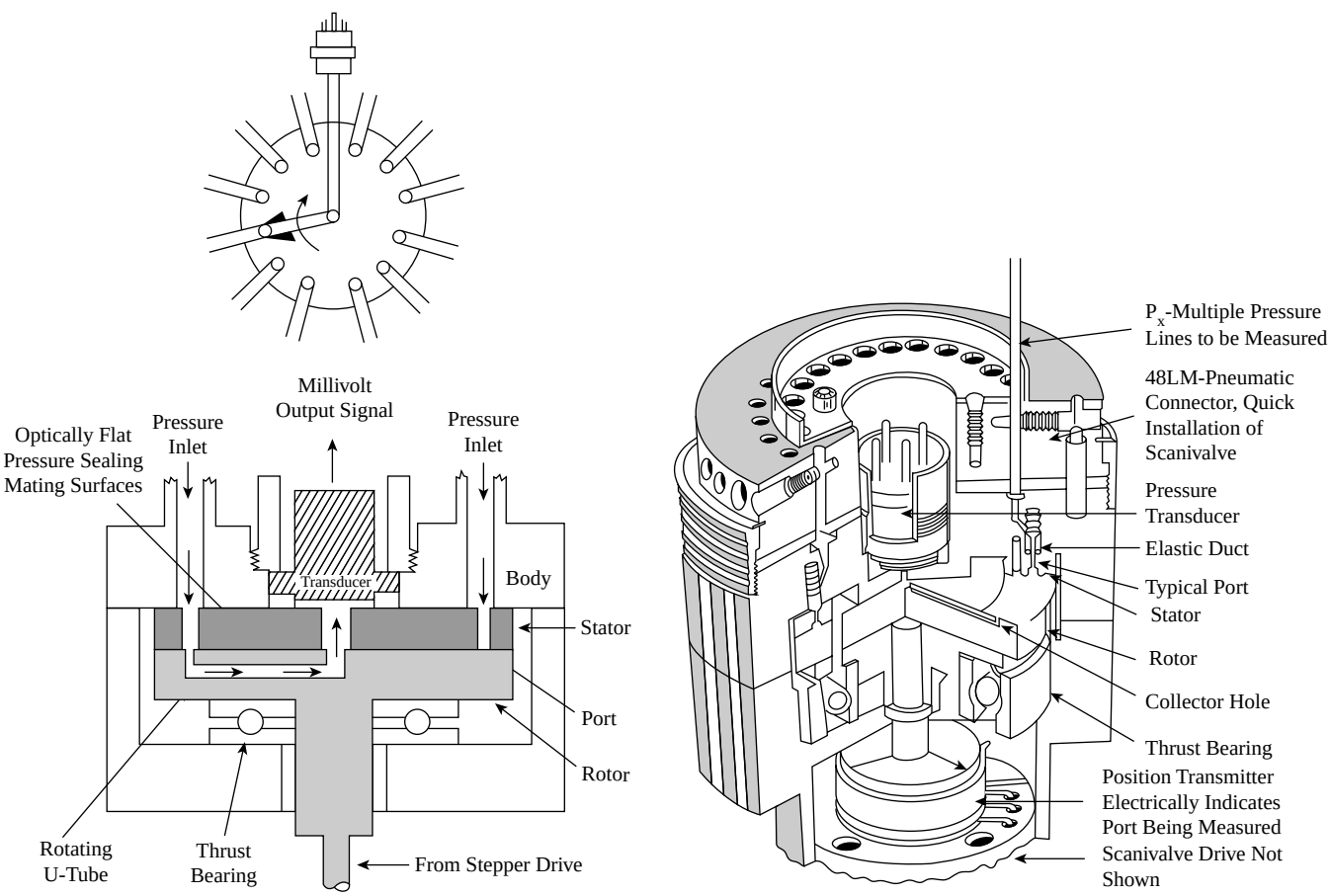

FIG. 5.10b

Scanner module showing "traveling volume" between the various signal ports and the transducer membrane. (Courtesy of Scanivalve Corp.)

© 2003 by Béla Lipták

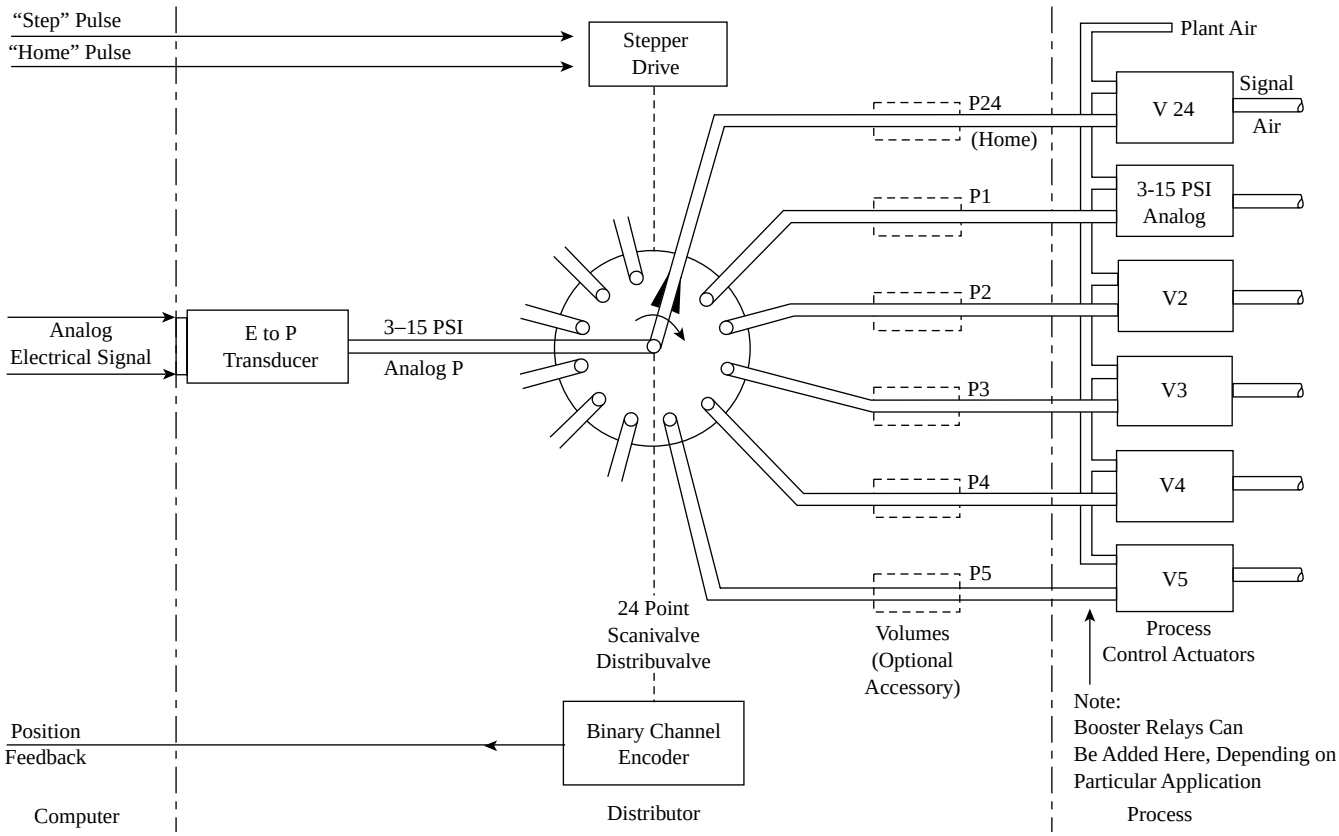

FIG. 5.10c
Rotary signal distributor. (Courtesy of Scanivalve Corp.)

between them. One module scans the pressures on the high (upstream) and the other the low (downstream) side of the flow elements. The two scanning modules are stepped by a timing belt driven by a common stepper drive. Up to 24 pairs of pressures can be transduced and sent to an electronic computer or data logger at a rate of about 1 port/s.

When higher precision is required, 2 of the 24 ports can be assigned for span and zero reference pressures, so that the scanner can be automatically calibrated on every scan.

The scanner is also capable of monitoring high pressure differences, up to 500 PSID.

Digital Interface Units

The digital interface units serve to control the scan cycle and to place the measured values and their addresses in memory. This memory is accessible to the host computer by either RS-232 or IEEE-4888.

Other features of the rotary pressure multiplexers include a nine-track optical disk as a channel encoder. This provides a binary-coded computer address number for each of the pressure input ports and for the home position. Another feature of these scanners is their capability to scan temperatures and pressures at the same address. This requires the addition of a thermocouple scanner module.

ROTARY AIR SIGNAL DISTRIBUTORS

As illustrated in Figure 5.10c, some 24 electronic analog signals can be converted to 3 to 15 PSIG (0.2 to 1.0 atmosphere) signals by time-sharing one E/P transducer. The rotary distributor can be installed in the field, near the actuators served, while being controlled by a central computer. As a stepping motor sequentially connects the 24 outputs, an optical channel encoder provides the required channel position feedback for the computer.

As shown in Figure 5.10c, it is desirable to equalize the volumes of the 24 output tubes. If some of the lines are long, if actuator volumes are substantially different, or if there is substantial leakage at the actuators, the addition of booster relays is recommended. The distributor will spend about 3 s at each port. This means that with 24 outputs, the time between updates is about 1 or 2 min.

AIR SIGNAL DISTRIBUTOR MANIFOLDS

If only a few pneumatic output signals are required or if a manual backup mode of operation is desired when the computer is down, the unit illustrated in Figure 5.10d can be considered.

© 2003 by Béla Lipták

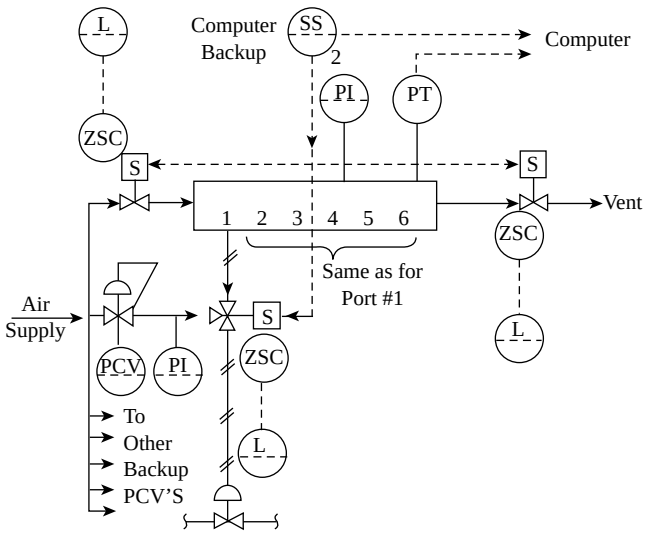

FIG. 5.10d
Air signal distributing manifold.

This type of a multiplexer is capable of sequentially updating six pneumatic output signals. Each line is sequentially pressurized or bled as required, while the solid-state transducer (PT) provides the needed feedback signal. Similar to Figure 5.10c, tube volume equalization and/or boosting should also be considered.

Switchover to the backup mode can be initiated either by the computer or locally by the operator. The manifold cover contains the required toggle switches and light-emitting diodes that serve to indicate the status positions of the solenoid valves within the manifold.

RAMPING PRESSURE SCANNERS

In these scanners all pressure inputs are simultaneously compared to a reference pressure, which changes linearly with time as a linear ramp function. Each input signal will equal the moving reference pressure at different times, and these times will correspond to the signal pressures involved.

Therefore, this system does not use the conventional pressure transducer followed by an analog-to-digital converter. Instead, it uses 64 individual pressure switches and a precision single-slope pressure ramp that has a linear relationship between pressure and time. A binary counter is synchronized to this pressure ramp, providing a digital count proportional to pressure. The multiple pressure inputs are individually compared to this pressure ramp and the digitizing is accomplished as a function of the time at which each comparator trips its enable line. This enable line transfers the binary count into the appropriate memory cell.

At the completion of each pressure ramp, a 64-word memory will contain digital data representing the 64 pressures that are piped into the front panel of the system. The above ramp and update function is completed in less than 800 ms. All or part of the stored data can be accessed, using the appropriate commands. A two-page memory is used so that one page can be updated while the other is being asynchronously accessed by the host system.

ELECTRONIC PRESSURE SCANNERS

Low Level Multiplexer

For cases in which the speed of rotary scanners is insufficient, the electronic scanners illustrated in Figure 5.10e can be used. These units can provide 0.08% of full scale accuracy and are available in 16, 32, and 64 input modules. Each pressure signal is provided with its own field-replaceable sensor.

Because of their large number, these dedicated sensors are usually of relatively low cost and low accuracy, but their performance can be improved by periodic recalibration. As shown in Figure 5.10e, the scanner can be provided with on-line recalibration capability and a 6-point calibration of all sensors can be completed in 2 min. During calibration all sensors are connected to the calibration manifold while their pressure inputs are blocked.

Figure 5.10e illustrates the system in its purge mode where the pressure applied by the calibration manifold is allowed to enter and purge the pressure input lines. This feature

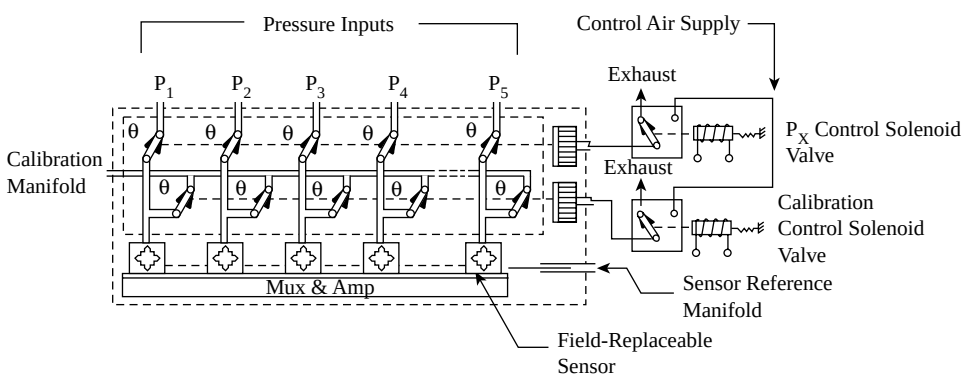

FIG. 5.10e
Electronic pressure scanner shown in its purge position. (Courtesy of Scanivalve Corp.)

© 2003 by Béla Lipták

is also useful if the scanned pressures are not clean pneumatic transmitter signals but come from combustion turbine engines or other processes where dust might contaminate the inlet lines. These scanners can handle pressures up to 500 PSIG (34.5 bars).

The basic element of the pressure sensor is an integrated circuit diaphragm that incorporates a piezoresistive sensor that changes resistance in proportion to the input pressure. The diaphragm is fabricated from a single silicon crystal on which strain-sensitive elements have been diffused in the form of the four-active-arms of a Wheatstone bridge.

The complete miniature module contains the pressure sensors, low-level multiplexer, instrumentation amplifier, and a valving circuit that allows each sensor to be pneumatically switched from its input pressure to a common calibration manifold as often as desired. Channel selection is controlled by a four-bit binary address input to the assembly.

High Level Multiplexer

In the data acquisition and control units used in flight test or automotive test applications, the electronic pressure scanners are provided with 384 channels. Their scanning rate can be 10,000 readings/s and if on-line rezeroing is included, the worst case inaccuracy will not exceed ±0.25% full scale.

Bibliography

Babichev, G.G., Kozlovskiy, S.I., Romanov, V.A., and Sharan, N.N., "Pressure Transducers with Frequency Output on the Base of Strain-Sensitive Unijunction Transistors," Paper 2.31, 1st IEEE International Conference on Sensors (IEEE Sensors 2002), Orlando, FL, June 2002.

Baker, W.L., "Minimizing Costs in Computerizing a Pneumatically Instrumented Plant," Paper #72–527, 27th Annual Instrumentation, Systems, and Automation Society Conference, October 1972.

von Beckerath, A., Eberlein, A., Julien, H., Kerstein, P., and Kreutzer, J., *WIKA Handbook on Pressure and Temperature Measurement*, U.S. ed., Lawrenceville, GA: Wika Instrument Corp., 1998.

Buckon, L.,"Considerations in Selecting a Pressure Calibration Device," Paper #91–0449, Instrumentation, Systems, and Automation Society Conference, Toronto, 1991.

Comber, J. and Hockman, P., "Pressure Monitoring: What's Happening?" *Instruments and Control Systems*, April 1980.

Dyer, S.A., *Wiley Survey of Instrumentation and Measurement*, New York: John Wiley & Sons, 2001.

Figliola, Richard S. and Beasley, D.E., *Theory and Design for Mechanical Measurements*, 3rd ed., New York: John Wiley & Sons, July 2000.

Hughes, T.A. "Pressure Measurement," EMC series, downloadable PDF, Instrumentation, Systems, and Automation Society, Research Triangle Park, NC, 2002.

"Improved Online Calibration" *InTech*, December 7, 2001.

Instrumentation, Systems, and Automation Society, "Industrial Measurement Series: Pressure" (video VHS, PAL & NTSC), Research Triangle Park, NC, 2002.

Johnson, D., "Pressure Sensing: It's Everywhere," *Control Engineering*, April 2001.

Kaufman, E.N., "Multiple Pressure Measurements," *InTech*, September 1976.

Knipe, G., "Applying Computerized Logging to Pneumatic Process Instrumentation," *Control and Instrumentation*, March 1978.

Mamzic, C.L., "Pneumatic Controls Interface with Computers," *Instruments and Control Systems*, October 1975.

Pemberton, J.C., "Pressure Scanning: State of the Art," *Measurement and Data*, January/February 1975.

Scanivalve Corp., "Pressure Measurement System, HyScan 2000," Liberty Lake, WA, 1990.

Weyermuller, G.H., "Pneumatic Control Systems Play Key Process Role," *Chemical Processing*, October 1973.

© 2003 by Béla Lipták

5.11 Pressure Gauges

B. G. LIPTÁK (1969, 1982, 1995) **J. E. JAMISON, S. EDVI** (2003)

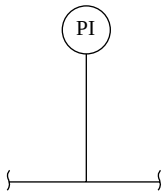

Flow Sheet Symbol

Design Temperature:	Pressure gauge is normally kept at ambient temperature through the use of seals or chemical seals.
Design Pressure:	Up to 100,000 PSIG (690 MPa)
Materials of Construction:	Phosphor bronze, alloy steel, 316 or 403 stainless steel, beryllium copper, Monel, or Ni-Span C element in a steel, stainless steel, or phenolic case.
Standard Ranges:	Vacuum: 30 to 0 in. Hg (760 to 0 mmHg) Compound: 30 in. Hg to 0 to 15 PSIG (760 mmHg to 0 to 1. bars); 30 in. Hg–0 to 30 PSIG (760 mmHg–0 to 2.1 bars); up to 30 in. Hg–0 to 200 PSIG (760 mmHg–0 to 13.8 bars). Pressure: 0 to 15 PSIG (0 to 1 bars); 0 to 30 PSIG (0 to 2.1 bars); 0 to 60 PSIG (0 to 4.1 bars); 0 to 100 PSIG (0 to 6.9 bars); 0 to 200 PSIG (0 to 13.8 bars); 0 to 300 PSIG (0 to 20.7 bars); 0 to 600 PSIG (0 to 41.4 bars); 0 to 1000 PSIG (0 to 69 bars); 0 to 3000 PSIG (0 to 207 bars); 0 to 10,000 PSIG (0 to 690 bars).
Dial Sizes:	1 in. (25 mm), 1.5 in. (40 mm), 2 in. (50 mm), 2.5 in. (63.5 mm), 3.5 in. (89 mm), 4 in. (100 mm), 4.5 in. (114 mm), 6 in. (150 mm), 10 in. (250 mm).
Inaccuracy:	0.1% of full scale for test gauges: 0.5 to 1% of full scale for industrial gauges; 1 to 3% of full scale for utility quality gauges.
Costs:	Note: prices mentioned here are full list prices; significant volume discounts are available from most manufacturers. $10 for a 2 in. (50 mm) copper alloy brass utility gauge (with accessories); $20 for a 4.5 in. (114 mm) utility gauge; $40 for a 2.5 in. (63 mm) stainless steel, glycerine-filled utility gauge; $60 for a 4 in. (100 mm) bronze element (not too common any more) industrial gauge; the same stainless case gauge with 316 stainless element and both PSI/kPa scales costs $72, and if also liquid filled costs $80. A 6 in. (160 mm) test gauge with brass/nickle-silver (inaccuracy of ±0.25% of span) element costs $240; a high precision test gauge (inaccuracy of ±0.1% of span) in 10 in. (250 mm) size with stainless element is $2500. A battery-operated, 1% accurate digital pressure gauge costs $160. Quartz helix units range from $2000 for an electronic transmitter to $17,000 for an IEEE and RS-232 programmable, stand-alone station.
Partial List of Suppliers:	ABB Kent-Taylor (www.abb.com) AMETEK Inc. U.S. Gauge Div. (www.ametekusg.com) Anderson Instrument Co. (www.andersoninstrumentco.com) Ashcroft-Heise Div. of Dresser Industries (www.dresserinstruments.com) Circle Seal Controls Inc. (www.circle-seal.com) Dresser Industries, Instrument Div. Dwyer Instruments Inc. (www.dwyer-inst.com) ENFM Gauges (www.jayco.org) Fischer & Porter, a Unit of ABB (www.abb.com) Fisher Controls Int., a Div. of Emerson Process Management (www.emersonprocess.com) The Foxboro Co. (www.foxboro.com)

© 2003 by Béla Lipták

Griffith Industrial Products Co. (www.versagauge.com)
Helicoid Instruments Div. of Bristol Babcock (www.bristolbabcock.com)
Honeywell Inc. (www.honeywell.com)
Lenz Co.
Marsh Instrument Co. (www.marshbellofram.com)
Marshalltown Instruments Inc. (www.marshbellofram.com)
McDaniel Controls, Inc. (www.mcdanielcontrols.com)
Mensor Corp. (quartz helix) (www.mensor.com)
Mid-West Instrument (www.midwestinstrument.com)
Moeller Instrument Co. (www.moellerinstrument.com)
Moore Products, now part of Siemens Inc. (www.sea.siemens.com)
Noshok Inc. (www.noshok.com)
Nuova-Fima (Italian gauge company) (www.nuovafima.com)
OCI Instruments Inc. (www.ociinstruments.com)
Palmer Instruments Inc. (www.palmerinstruments.com)
Perma-Cal Corp. (www.perma-cal.com)
PSI-Tronics Inc. (digital)
Rosemount Inc. (www.rosemount.com)
Roylyn Inc.
Ruska Instrument Corp. (quartz helix) (www.ruska.com)
Span Instruments Inc.
Techscience International
Texas Instruments (quartz helix)
3D Instruments
Transmation Inc.
H.O. Trerice Co. (www.hotrerice.com)
U.S. Gauge (see AMETEK above)
Validyne Engineering Corp. (www.validyne.com)
Wallace & Tiernan Inc. (www.usfwt.com)
Weiss Instruments Inc. (www.weissinstruments.com)
Weksler Instruments Corp. (www.dresserinstruments.com)
WIKA Instrument Corp. (www.wika.com)
Yokogawa Corp. of America (www.yca.com)

INTRODUCTION

The elastic elements used in pressure gauges have already been discussed in connection with Figures 5.4a and 5.4c, when the gauge movements of the Bourdon-type pressure gauges were discussed. These aspects will not be repeated here. In addition to the type of elastic element used, pressure gauges can also be grouped according to their precision or their dial size.

In test gauges the measurement error is held between 0.1 and 0.25% of range, and in order to obtain that level of precision, the dial size tends to be large. In order to provide good visibility, the diameter of test gauges can be up to 12 in. (300 mm) or more. The error in industrial-quality gauges is usually between 0.25 and 1.0% of span, and the most often used dial sizes are 4.5 or 6 in. (114 mm or 150 mm). In the lower quality utility gauges, the measurement error ranges from 1 to 3%, and the dial size can be 1.5, 2, 2.5, 3.5, 4, or 4.5 in. (40, 50, 63, 94, 100, or 115 mm).

THE GAUGE COMPONENTS

The main components of a pressure gauge are the retaining ring, glass lens, lens gaskets, pointer, dial, movement, sensing element, and the case.

The Gauge Housing

Gauge cases are available in drawn steel, cast iron, aluminum, brass, polypropylene, or phenolic resin materials. Drawn steel is the most economical selection, while cast iron is generally used for ruggedness. Brass is selected for decorative value and for antimagnetic applications, aluminum is utilized on limited-weight installations, and phenolic resin or polypropylene case materials are used in corrosive atmospheres. Other materials, such as stainless steel, are available for special applications.

The standard mounting styles include back flange, front flange, and turret types (see Figure 5.11a). The selection is based on the mounting requirements, which can be for surface mounting, flush-mounting, or pipe line mounting.

Gasket and Lens The gasketed lens is held against the case front by rings. The ring can be attached to the case in several ways, including snap, friction, slip, threaded, and hinged designs. The appearance of the gauge can also be affected by ring design variations, including peaked, flat-flared, and beaded gauges.

The lens crystals are available in a variety of materials, including shatterproof, flat, and beveled glass or cellulose acetate, acrylic, and nonelectrostatic plastics.

© 2003 by Béla Lipták

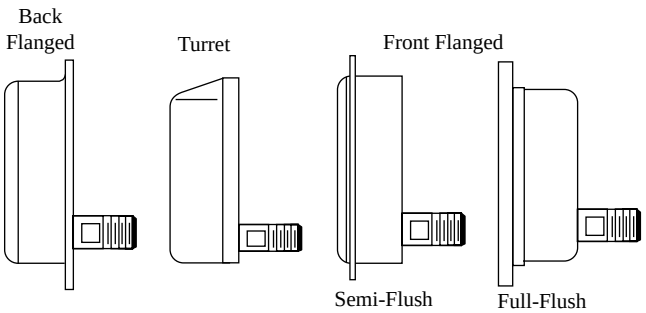

FIG. 5.11a
Pressure gauge case design variations.

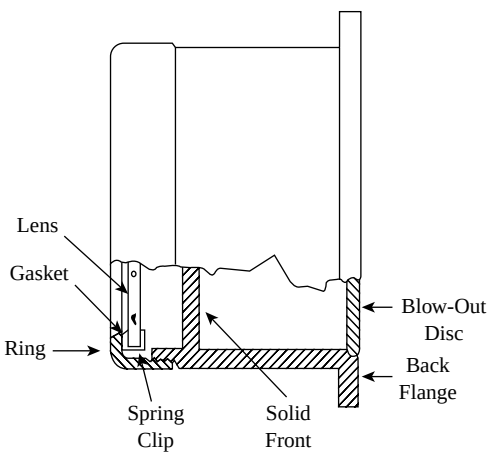

FIG. 5.11b
Safety gauge case.

Sensing Element The elastic pressure-sensing element in the gauge is exposed to the process pressure, and there is a possibility of rupturing this element due to overpressure. Cases are available with various degrees of safety. Almost all industrial gauges are provided at least with a blowout disk that allows the internal pressure to escape. For severe or dangerous services, the solid-front design is recommended. Here, an integrally cast solid wall separates the dial and lens from the sensing elements, and a safety blowout disk covers the entire back of the case (see Figure 5.11b). The disk is gasketed and spring-mounted so that it releases internal pressures as soon as they reach about 1 PSIG (6.9 kPa). As an additional convenience, the full-area disk provides quick access to the element and gauge movement for inspection, recalibration, or repair without need to remove the dial.

Safety Features Figure 5.11c illustrates some additional safety features, such as magnetic coupling between sensor and pointer and an internal pressure relief valve. The sensor in the gauge is a Bourdon tube, available with ranges and characteristics listed in Table 5.4d.

The process connections of most gauges are either 1/4 or 1/2 in. (6.3 or 12.5 mm) in size and are located on either the back or the bottom of the case. Special connection sizes and locations are also available.

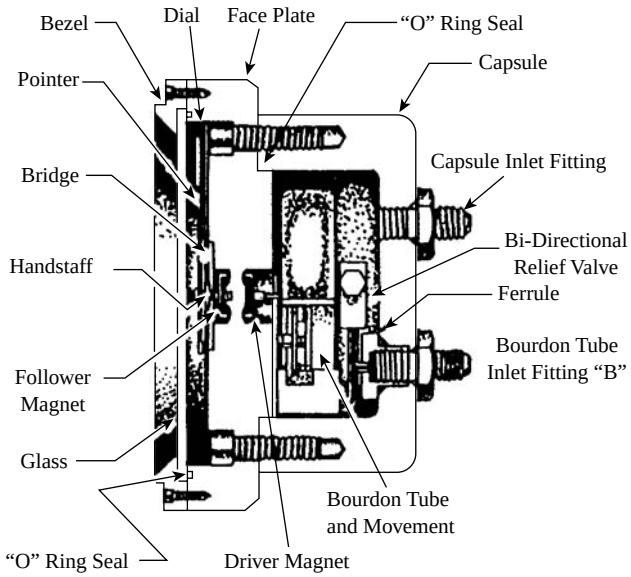

FIG. 5.11c
Magnetically coupled pressure gauge with internal pressure relief. (Courtesy of Mid-West Instrument.)

Dials and Pointers

Gauge dials are made of steel, brass, aluminum, solid plastic, or laminated plastic, with black graduations on white background or in other color combinations. Numerals are placed at the major graduations. The number of minor graduations usually conforms to gauge inaccuracy. For example, a 1000 PSIG (6.9 MPa) gauge with ±1% inaccuracy will have minor graduations at 20 PSI (138 kPa) intervals. On precision gauges, the major graduations are placed on the inner circle and the subdivisions on the outer circle for easier reading.

To eliminate parallax error, one of the following designs can be considered: raised dial, use of split pointer, or use of mirror ring.

For improved readability, gauges are available with 360 or 720 degree dials. For example, on an 8 1/2 in. (212.5 mm) dial with two revolutions corresponding to full-scale reading, the actual scale length is 45 in. (1125 mm). Another common method of improving readability is the use of suppressed scales, which, instead of being zero-based, are selected to cover ±50% of the average operating pressure.

The pointer adjustment methods are a function of gauge quality. On economy designs, the pointer is fixed, so that the hub has to be lifted from the shaft for adjustment and then repositioned. The standard industrial gauges are furnished with adjustable pointers with friction fit between pointer and shaft. Pointer adjustment is made by turning the hub while the shaft is firmly held. Precision or test gauges are furnished with micrometer pointer adjustment.

© 2003 by Béla Lipták

Maximum Pointer When it is desired to have a permanent indication of the highest pressure reached, a *maximum* pointer can be added to the gauge. This pointer is useful, for example, for indicating the maximum pressure reached before a burst disk or a safety valve relieved the system. The maximum pointer can be manually reset by the operator. On some installations it is desirable to provide a set pointer, which is permanently positioned for the operator's information at the normal operating pressure desired.

Digital Displays Pressure gauges are also available with digital displays, as shown in Figure 5.11d. The sensors in these units are electronic, such as semiconductor strain gauges. The electric power supply is usually 129 V AC or a 9 V battery. Due to the low power consumption, the battery life in these units can reach 5 years. The 4-digit LCD displays are usually 0.5 in. (12 mm) high and are accurate to 0.25 to 1% of full scale.

DIAPHRAGM-TYPE VACUUM GAUGES

The diaphragm sensors discussed in connection with Figure 5.5e are also used as elements in direct-reading vacuum gauges. The diaphragm gauge indicates the pressure difference between the process vacuum and the fully evacuated reference chamber. A thin, copper beryllium diaphragm isolates the reference chamber from the process, and the diaphragm movement is a measure of absolute process pressure. Mechanical linkage is used to transmit diaphragm motion to scale readout. The measurement is independent of atmospheric pressure variations.

The scale is nonlinear and is expanded for precise reading below 50 mmHg (6.7 kPa) absolute. Above 50 mmHg, the scale permits rough readings only. The full-scale range is 0.1 to 760 mmHg (0.013 to 100 kPa) on a scale length of approximately 8 in. (200 mm). The unit can tolerate overpressures up to 7 PSIG (48 kPa).

When the diaphragm vacuum gauge is considered for corrosive service, a purge flange accessory is recommended for installation between the gauge and the process. A small, controlled quantity of atmospheric air (or the protective gas) is fed through the purge flange into the process. The purge flow is adjusted to displace all corrosive gases and to prevent their diffusion into the gauge. Care should be taken in selecting the proper dimensions, so that the pressure drop through the purge flange will not affect the reading accuracy.

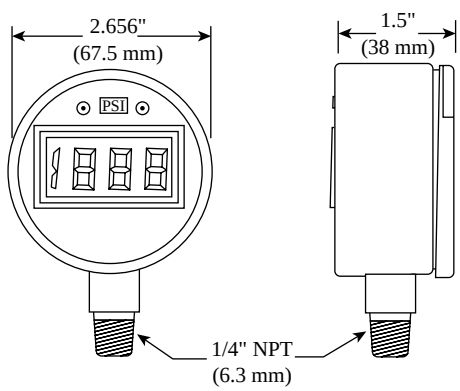

FIG. 5.11d
Battery-operated digital pressure gauge. (Courtesy of PSI-Tronics, Inc.)

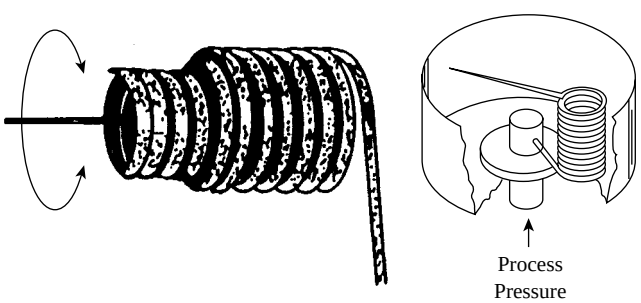

FIG. 5.11e
Gearless gauge movements give longer life and are better suited for heavy-vibration service.

SPECIAL FEATURES

Illumination

When it is desired to read the pressure from a considerable distance, the gauge dial can be illuminated. These dials are normally jet black with white numerals and graduations. The translucent glass dial is illuminated by a number of electric lamps arranged in the case to eliminate all shadows. The lamps can provide standard white or ultraviolet (black) light, and the pointers and graduations can be phosphorescent.

Temperature Compensation

On high-precision gauges, it is necessary to compensate for ambient temperature variations. Temperature changes affect the modulus of elasticity of the sensing element and also cause thermal growth of the linkage members. Compensation is achieved by inserting a bimetallic bar into the linkage between elastic element and the gauge movement.

Duplex and Differential Gauges

When it is desired to indicate two related process pressures on the same dial, duplex gauges can be used. These consist of two independent sensing element, movement, and pointer assemblies. When the differential between two pressures is of interest, a single pointer is available. Differential gauges are available with predetermined or interchangeable high- and low-pressure connections to real differentials in both directions. When severe vibrations exist, the gearless gauges can be considered (see Figure 5.11e).

© 2003 by Béla Lipták

TABLE 5.11f
*Classification of Pressure Gauges According to Their Inaccuracy**

Accuracy Grade	Permissible Error (±Percent of Span) (Excluding Friction)			Maximum Friction (Percent of Span)	Minimum Recommended Gauge Size (270 deg. Dial Arc)
	Lower $^1/_4$ of Scale	Middle $^1/_2$ of Scale	Upper $^1/_4$ Scale		
4A	←	0.1	→	[Note (1)]	$8^1/_2$
3A	←	0.25	→	0.25	$4^1/_2$
2A	←	0.5	→	0.5	$2^1/_2$
1A	←	1.0	→	1.0	$1^1/_2$
A	2.0	1.0	2.0	1.0	$1^1/_2$
B	3.0	2.0	3.0	2.0	$1^1/_2$
C	4.0	3.0	4.0	3.0	$1^1/_2$
D	5.0	5.0	5.0	3.0	$1^1/_2$

*From Reference 1.

Note: (1) Grade 4A gauges must remain within specified tolerance before and after being lightly tapped.

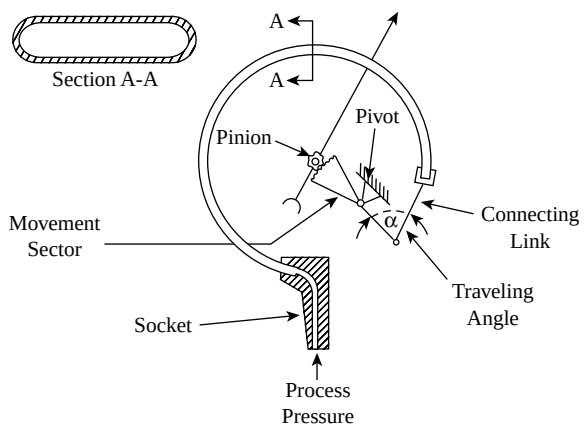

FIG. 5.11g
Traditional pressure gauge design involves many moving parts and therefore they tend to be high maintenance devices.

Failure Causes and Reliability

Table 5.11f provides a summary of the permissible errors of the various grades of pressure gauges. In addition to the precision of pressure gauges, another important feature is their reliability and life span.

The C-Bourdon movement illustrated in Figure 5.11g is a complicated and delicate mechanism consisting of many moving parts: gears, links, pins, and cams. The low reliability and high maintenance of such designs is in contrast with the simplicity of the single Bourdon coil illustrated in Figure 5.11e. Such single-element movements (sometimes constructed of Inconel) provide rugged reliability under vibrating process conditions.

Another frequent cause of pressure gauge failure has been the condensation of ambient humidity inside the case. Such condensation can contribute to corrosion and also to mechanical damage due to freezing in the winter. The liquid (usually glycerin) filling in pressure gauges serves not only to dampen pointer vibration, but also to eliminate the potential for the condensation of ambient humidity by keeping out ambient air. The combination of using single-element Bourdon-coils and providing liquid fillings has contributed to improved reliability and reduced requirements for pressure gauges maintenance.

CONCLUSIONS

Much has been written on the subjects of pressure gauge design, ranges, calibration, and test procedures.[1] The data in Table 5.11f is taken from the American Society of Mechanical Engineers and describes the accuracy grade classifications used in connection with pressure gauges.

Reference

1. American National Standard for Gauges: Pressure Indicating Dial Type: Elastic Element, ASME B40.1, New York, 1991.

Bibliography

von Beckerath, A., Eberlein, A., Julien, H., Kerstein, P., and Kreutzer, J., *WIKA Handbook on Pressure and Temperature Measurement*, U.S. ed., Lawrenceville, GA: Wika Instrument Corp., 1998.

"Bourdon Pressure Gauges," *Measurements and Control*, December 1991.

Buftenmyer, W.L., "Selecting Bourdon-Tube Gauges," *Instruments and Control Systems*, February 1961.

Comber, J. and Hockman, P., "Pressure Monitoring: What's Happening?" *Instruments and Control Systems*, April 1980.

Dyer, S.A., *Wiley Survey of Instrumentation and Measurement*, New York: John Wiley & Sons, 2001.

Faust, E., "Pressure Calibration Standards: How Accurate Should They Be?" *Hydrocarbon Processing*, January 1994.

© 2003 by Béla Lipták

Figliola, R.S. and Beasley, D.E., *Theory and Design for Mechanical Measurements*, 3rd ed., New York: John Wiley & Sons, July 2000.

Giitein, K., "A Dimensional Analysis Approach to Bourdon Tube Design," *Instrumentation Practice*, September 1952.

Gillum, D., "Industrial Pressure, Level, and Density Measurement," Research Triangle Park, NC: ISA Press, 1995.

Hall, J., "Monitoring Pressure with Newer Technologies," *Instruments and Control Systems*, April 1979.

Hughes, T.A., "Pressure Measurement," EMC series, downloadable PDF, Instrumentation, Systems, and Automation Society, Research Triangle Park, NC, 2002.

Instrumentation, Systems, and Automation Society, "Industrial Measurement Series: Pressure" (video VHS, PAL & NTSC), Research Triangle Park, NC, 2002.

Instrumentation, Systems, and Automation Society, "Pressure: Indicators and Transmitters," CD-ROM, Research Triangle Park, NC, 2002.

Johnson, D., "Pressure Sensing: It's Everywhere, *Control Engineering*," April 2001.

Moore, R.L., "Basic Instrumentation Lecture Notes and Study Guide: Measurement Fundamentals," Instrumentation, Systems, and Automation Society, Research Triangle Park, NC, 1976.

"Precision Pressure Gauges," *Instruments and Control Systems*, June 1961.

© 2003 by Béla Lipták

5.12 Pressure Repeaters

B. G. LIPTÁK (1982, 1995, 2003)

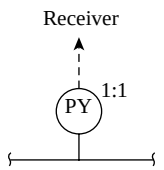

Flow Sheet Symbol

Design Variations:	A. Booster relays B. Flange-mounted repeaters C. Button-diaphragm repeaters
Pressure Range:	A. Up to 100 PSIG (6.9 bars) B. Vacuum to 100 PSIG (6.9 bars) C. 1000 to 10,000 PSIG (69 to 690 bars)
Operating Temperatures:	A. Up to 180°F (82°C) B. Up to 375°F (190°C) for diaphragm and up to 600°F (316°C) for bellows design C. Up to 800°F (430°C)
Materials of Construction:	A. Brass, stainless steel, and neoprene B. Wetted parts can be 316 stainless steel; Monel; Hastelloy; tantalum; or coated by Kel-F, Teflon, or Polyphenylene sulfide C. 316 stainless steel wetted parts
Inaccuracy:	A. 0.5 to 5% of repeated pressure B. 0.01 to 0.1 in. H_2O (0.36 to 3.6 Pa)/PSIG repeated. A 100°F (55°C) shift in ambient or operating temperature can result in added error of 1 in. H_2O (249 Pa) C. 1.0% of full scale
Costs:	A. $75 to $250 B. $500 and up depending on materials of construction C. $1000 and up depending on construction
Partial List of Suppliers:	ABB Inc.-Instrumentation (B) (www.abb.com/instrumentation) Fisher Controls (B) (www.fisherregulators.com) Foxboro-Invensys (A,B) (www.foxboro.com/level/acc-repeat-seals) Moore Products, now part of Siemens Inc. (www.sea.siemens.com) Rosemount Div. of Emerson (C) (www.rosemount.com) Siemens Energy and Automation (B) (www.sea.siemens.com)

Pressure repeaters are used to repeat either the pressure of an instrument air signal or to repeat the process pressure with an air signal of equal pressure or vacuum.

BOOSTER RELAYS

When an instrument air signal is being repeated, the device used is called a booster relay. Its purpose is to provide a higher airflow at the same pressure as the input signal (Figure 5.12a). In the design shown, the input pressure acts on the upper diaphragm. The force, which results from the dead-ended application of the input pressure, is balanced by the output pressure. This force is acting on the effective area of the lower diaphragm. If the input pressure rises, this opens up the pilot valve, which then admits more supply air to rebalance the booster.

FLANGED REPEATERS

Figure 5.12b shows a bellows-type pressure repeater. In this design the process pressure acts on the outside of the bellows, and is balanced by the repeated air pressure on the inside of the bellows. This design is capable of repeating pressures up to 200 PSIG (13.8 bars) and can operate at process temperatures from –60 to 600°F (–51 to 316°C). As the airflow through this unit is very low, a booster relay is usually added,

© 2003 by Béla Lipták

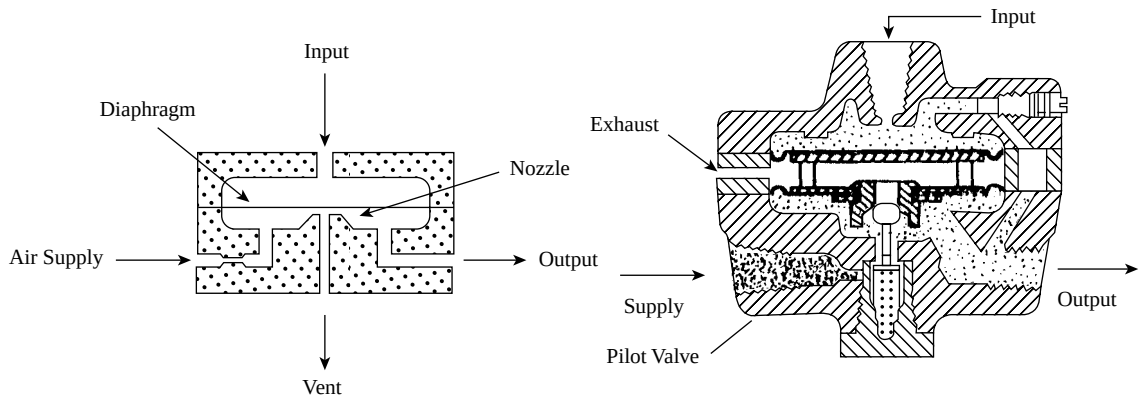

FIG. 5.12a
The configuration of a 1:1 repeater or booster relay. The low flow design on the left does not have a pilot valve; the high flow (up to 10 SCFM or 300 lpm) design does. (Courtesy of Moore Products Co.)

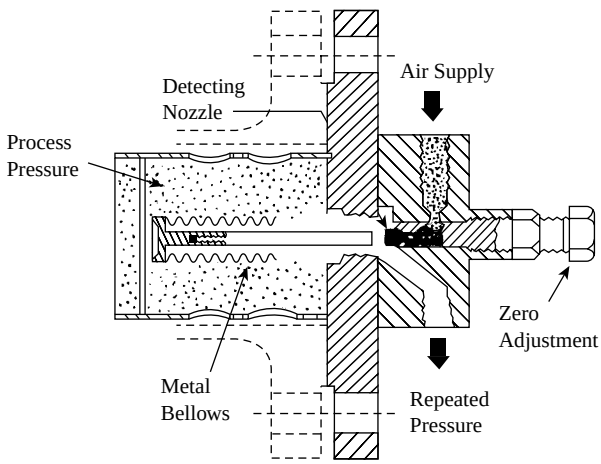

FIG. 5.12b
Bellows-type flanged pressure repeater. (Courtesy of Moore Products Co.)

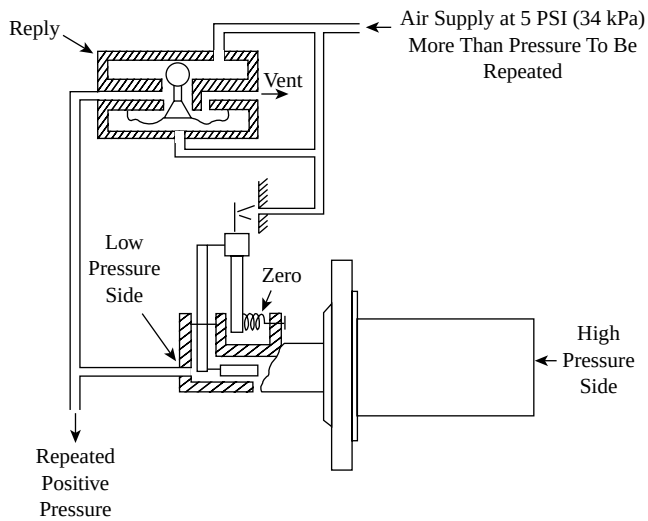

FIG. 5.12c
Extended diaphragm positive pressure repeater.

when the output signal is not dead-ended. As shown in Figure 5.12b, the zero output is adjustable. The flange is available in either steel or stainless steel construction.

FORCE BALANCE PRESSURE REPEATERS

Both the flat and the extended diaphragm differential pressure (d/p) transmitters are available as repeaters, and they can be used to repeat both positive and vacuum pressures. The basic design features for these units are the same as those of their transmitter versions.

Figure 5.12c illustrates the operation of the positive pressure repeater, which can reproduce process pressures up to 100 PSIG (690 KPa) with an accuracy of about 0.1 in. H_2O (3.6 Pa)/PSIG repeated. To repeat higher pressures, a high-pressure relay, which can be obtained on special order, is required. This device is very similar to the transmitting unit, except that the feedback from the relay is piped to the low-pressure side of the d/p cell instead of to the feedback bellows, which have been eliminated. The relay itself is modified for the higher operating pressure and the capsule filling is different, but otherwise the repeater is identical to the transmitter.

The operation of the unit is as follows: An increase in the process pressure is detected by the high side of the diaphragm capsule, transmitting additional force to the force bar. This in turn causes the nozzle to be covered by the flapper, which in turn increases the back pressure to the relay. The relay responds to this by restricting the vent connection and opening the air supply to the relay outlet. This increased relay output pressure is then sent to the low-pressure side of the d/p cell diaphragm capsule. When the pressures on the high and low side are equal, the flapper is repositioned in relation to the nozzle in its throttling band and remains in that position until the process pressure changes again. The air signal that is sent to the low-pressure side of the capsule is the same as the process pressure.

© 2003 by Béla Lipták

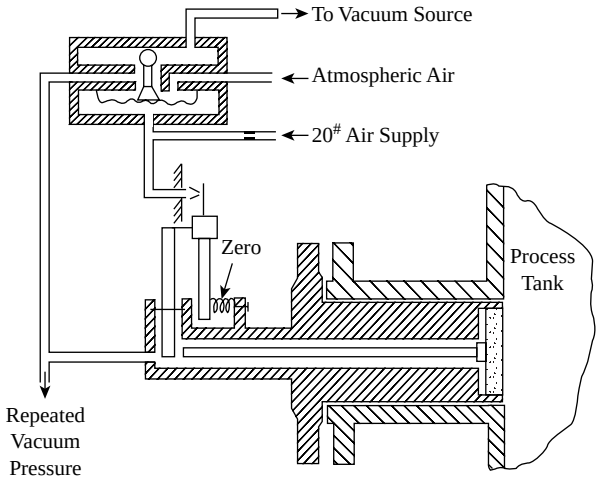

FIG. 5.12d
Extended repeater for vacuum service.

Vacuum Repeaters

When it is desired to repeat vacuum instead of positive pressures, two techniques can be employed. One involves the use of a suppression spring, and the other is an external vacuum source (Figure 5.12d).

The methods of using range depression (or suppression) springs have already been illustrated in Figure 3.6o. For example, if the suppression spring is set for 16.5 PSI (114 kPa), the output signal from the repeater will be the sum of the pressure sensed by the high-pressure side of the capsule and the setting of the suppression spring. Therefore, with the above setting, the output signal from the repeater will be 16.5 PSI higher than the pressure of the process vapors. If the process is at atmospheric pressure, the output is 16.5 PSIG, and if it is full vacuum, the output is 1.5 PSIG (10 kPa). By the use of this bias, the need for a vacuum reference source is eliminated.

With a reference vacuum source that is at least 2 in. of water column lower than the minimum absolute pressure to be repeated, the design illustrated in Figure 5.12d can be considered. This unit incorporates a special vacuum relay. When the absolute pressure in the tank increases, a force is exerted on the force bar. This tends to draw the flapper away from the nozzle, causing a reduction in the pressure on the relay diaphragm. This moves the ball down, closing off the vacuum supply and opening the connection to the atmosphere. The net effect is an increase in the relay output pressure, which is piped to the low-pressure side of the diaphragm capsule to balance the equal pressure on the process side.

When the absolute pressure of the process decreases, the opposite sequence of events takes place; namely, the force bar tends to cover the nozzle, which increases the pressure on the relay diaphragm, pushing the ball up, thereby closing the connection to the atmosphere and opening it to the vacuum source. The net effect is a lowering of the relay output pressure, which then matches the lower process pressure on the other side of the capsule.

BUTTON-DIAPHRAGM REPEATERS

These instruments have been developed for the plastic extrusion and synthetic fiber industries, in which high pressures and temperatures are encountered together with a need to eliminate dead-ended cavities to prevent plugging.

Figure 5.12e illustrates a button diaphragm that operates on a direct force balance principle. Basically, this is a pressure repeater that generates an air signal that is about 1/200 of the process pressure. The main components of the unit are the sensing and balancing diaphragms connected by the force bar and the regulating valve.

The process pressure acting on the sensing diaphragm is in force balance with the air output acting on the balancing diaphragm. The air output is proportional to the process pressure by the inverse ratio of the two diaphragm areas. When the process pressure increases, the measuring diaphragm raises the force bar, thereby opening the regulating valve to the air supply. This causes a corresponding increase in the air output signal, which rebalances the system.

The unit is available with ranges from 0–150 PSIG to 0–10,000 PSIG (0–10 MPa to 0–69 MPa) and can be used on process temperatures up to 800°F (430°C). The temperature effect is relatively small, ±0.5% of span/100°F (56°C) change, and inaccuracy is 1/2 to 1% of full scale. The wetted parts are made of 316 stainless steel, and the button diaphragm requires a process connection size of only 1/2 in. (12.5 mm).

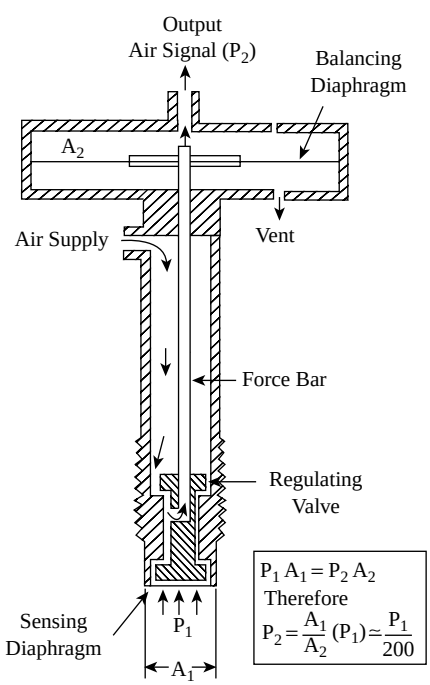

FIG. 5.12e
Button-diaphragm repeater.

© 2003 by Béla Lipták

PRESSURE REPEATER APPLICATIONS

When detecting the level in pressurized vessels, the vapor space pressure must be connected to the low side of the d/p cell to serve as a reference. On hard-to-handle materials, a one-to-one pressure repeater may be used to provide this reference and simultaneously to isolate the d/p cell from the process. Repeaters develop an air output pressure, equal to the vapor space pressure. They are inexpensive, but their accuracy is limited. The error in the repeated output pressure increases as the repeated pressure rises. At a pressure level of 40 PSIG (0.27 MPa), the error is 2 in. (51 mm) H_2O; at a pressure level of 400 PSIG (2.7 MPa), the error is 20 in. (508 mm) H_2O. Obviously, errors of this magnitude are not acceptable for most process level measurements.

The repeaters discussed in connection with Figures 5.12c and 5.12d are modifications of the d/p cell and are available with a flat or extended diaphragm. Designs are available for vacuum and for positive pressures of up to 150 PSIG (1 MPa). Figure 5.12c illustrates the operation of the positive pressure repeater, which can reproduce pressures from 5 to 35 PSIG (0.35 to 2.4 bars) with an inaccuracy of 0.1 in. H_2O/PSIG repeated. A high-pressure relay is required when the pressure to be repeated is above 100 PSIG. This device is similar to the d/p transmitter except that feedback from the relay is piped to the low-pressure side of the d/p cell rather than to a bellows.

Repeating a Vacuum

When it is desired to repeat vacuum instead of positive pressure, either a suppression spring or an external vacuum source can be applied. The range suppression (or depression) spring is illustrated in Figure 5.6e. If the suppression spring is set for 16.5 PSI (114 kPa), the output signal of the repeater will be the sum of the pressure sensed by the high-pressure side of the capsule plus the setting of the suppression spring. In other words, the output signal from the repeater will be 16.5 PSI (114 kPa) higher than the pressure of the process.

If the process is at atmospheric pressure, then the output will be 16.5 PSIG (114 kPa); if it is at full vacuum, the output will be 1.8 PSIG (12.4 kPa). By the use of this bias, the need for a vacuum reference source is eliminated. The bias added in the repeater is eliminated at the d/p cell by proper setting of its suppression spring.

It should be noted that this approach to repeating vacuum pressures is rather inaccurate as it is referenced to the barometric pressure, which can vary by as much 1 in. Hg (13.6 in. of H_2O, or 0.34 m of H_2O). When a reference vacuum source is available that is at least 2 in. (50 mm) of water column lower than the minimum process pressure to be repeated, the design with the special vacuum relay illustrated in Figure 5.12d can be considered.

Level Measurement Applications

Figure 5.12f illustrates two versions of the continuous level detector, both limited to atmospheric tanks, and to applications where low cost is more important than quality or accuracy of measurement. The diaphragm box unit, shown on the left side of the sketch, is similar in operation to the previously discussed riser pipe diaphragm switches, except that the diaphragm isolates the captive air from the process fluid. The unit consists of an air-filled diaphragm box connected to a pressure detector via capillary tubing. As the level rises above the diaphragm, the liquid head pressure compresses the captive air inside. The air pressure in the capillary tubing is sensed by a pressure element and displayed as level indication.

A one-to-one pressure repeater is illustrated on the bottom part of Figure 3.12f. This unit is submerged in the vessel; the static head of the liquid exerts an upward force on the diaphragm. This upward force increases as the level rises and is opposed by the air supply pressure on the other side of the diaphragm. The force due to rising level moves the diaphragm toward a bleed orifice, restricting its flow to atmosphere and causing the air pressure to build up until it equals the static head pressure. When the forces on the two sides of the diaphragm are equal, the unit is in equilibrium.

The speed of response of the unit is changed by an adjustable restriction, which, if opened, will increase sensitivity by allowing more air to flow onto the diaphragm. Air supply to the unit should be regulated at a pressure of

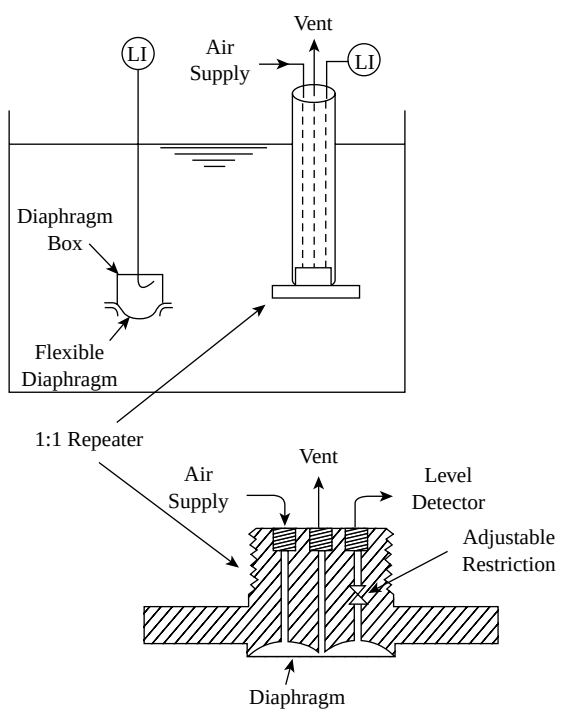

FIG. 5.12f
Diaphragm-type repeaters for continuous level detection.

© 2003 by Béla Lipták

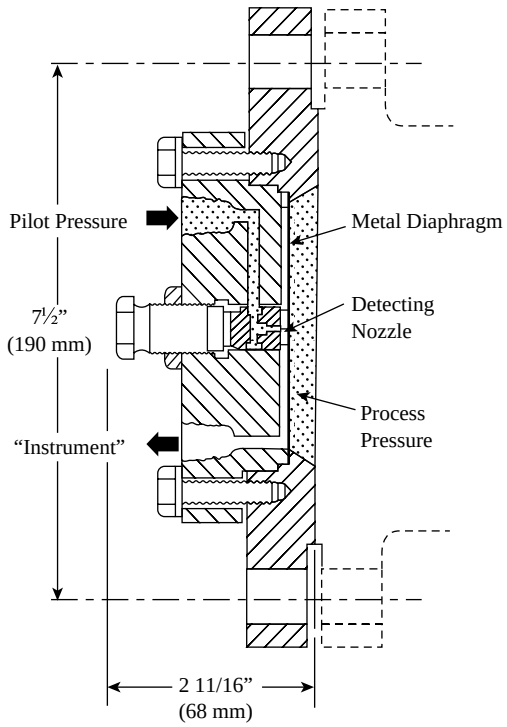

FIG. 5.12g
Tank nozzle mounted pressure repeater.

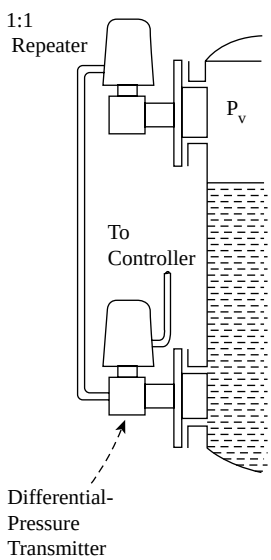

FIG. 5.12h
The vapor pressure (Pv) in the process vessel is repeated and is sent to the low pressure side of the d/p transmitter in the form of a clean and cold air signal.

3 to 5 PSIG (0.2 to 0.3 bars) in excess of the maximum hydraulic head to be repeated.

The pressure repeater can be submerged, as shown in Figure 3.12f, or mounted on a nozzle near the bottom of an atmospheric tank (Figure 3.12g). These flange-mounted units are available with stainless steel diaphragms and steel or stainless steel bodies. They can operate with up to 160 PSIG (11 bars) air supply and can repeat hydrostatic pressures up to within 5 PSI (0.35 bars) of the air supply pressure. The air consumption of these repeaters is under 0.2 SCFM (5.7 lpm).

In pressurized or evacuated tanks, when it is desirable to seal the process vapors inside the vessel, pressure repeaters can serve that purpose. Figure 5.12h illustrates how the extended diaphragm type pressure repeaters (Figures 5.12c and 5.12d) can complement the d/p transmitters in such level measurement applications.

Bibliography

von Beckerath, A., Eberlein, A., Julien, H., Kerstein, P., and Kreutzer, J., *WIKA Handbook on Pressure and Temperature Measurement*, U.S. ed., Lawrenceville, GA: Wika Instrument Corp., 1998.

Demorest, W.J., "Pressure Measurement," *Chemical Engineering*, September 30, 1985.

Dyer, S.A., *Wiley Survey of Instrumentation and Measurement*, New York: John Wiley & Sons, 2001.

Elliott, T.C., "Temperature, Pressure, Level, Flow: Key Measurements in Power and Process," *Power*, September 1975.

Figliola, R.S. and Beasley, D.E., *Theory and Design for Mechanical Measurements*, 3rd ed., New York: John Wiley & Sons, July 2000.

Herceg, E.E., *Handbook of Measurement and Control*, Pennsauken, NJ: Schaeviz Engineering, 1972.

Hughes, T.A., "Pressure Measurement," EMC series, downloadable PDF, Instrumentation, Systems, and Automation Society, Research Triangle Park, NC, 2002.

Instrumentation, Systems, and Automation Society, "Industrial Measurement Series: Pressure" (video VHS, PAL & NTSC), Research Triangle Park, NC, 2002.

Johnson, D., "Pressure Sensing: It's Everywhere," *Control Engineering*, April 2001.

Labs, W., "Level Measurement, Pressure Methods Dominate," *Instruments and Control Systems*, February 1990.

Marrano, S.J., "How to Choose and Apply Pressure Transmitters," *Control*, March 2000.

Merritt, R., "Keeping Up with Pressure Sensors," *Instruments and Control Systems*, April 1982.

Moore, R.L., "Basic Instrumentation Lecture Notes and Study Guide: Measurement Fundamentals," Instrumentation, Systems, and Automation Society, Research Triangle Park, NC, 1976.

Soisson, H.E., *Instrumentation in Industry*, New York: John Wiley & Sons, 1975.

© 2003 by Béla Lipták

5.13 Pressure and Differential Pressure Switches

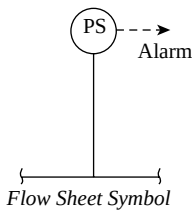

Flow Sheet Symbol

B. G. LIPTÁK (1969, 1982, 1995, 2003)

Design Pressure:	Up to 20,000 PSIG (138 MPa)
Operating Temperatures:	Usually kept near ambient by the use of syphons or chemical seals. Ambient limits: –4 to 140°F (–20 to 60°C). Maximum Fluid temperatures: with Buna-N, 180°F (82°C); with Viton, 400°F (205°C); with stainless steel, up to 750°F (399°C).
Materials of Construction:	Wetted parts can be aluminum, bronze, brass, 303 or 316 stainless steel, Monel, Teflon, Buna-N, Viton, or neoprene
Set Point Repeatability:	0.5 to 2% of full scale
Ranges:	From 0.1 in. H_2O to 12,000 PSIG (25 Pa to 83 MPa)
Differentials:	Fixed or adjustable. Fixed differentials are preset to about 2 to 5% of range. Adjustable differentials can be set from a couple of percent up to full scale.
Costs:	From $25 to $500. For example, a NEMA l, general-purpose, SPDT, UL-listed switch with aluminum stem and Buna-N diaphragm costs about $75; a NEMA 4, watertight, SPDT, UL-listed switch with stainless steel stem and diaphragm costs about $100; an explosion-proof, UL-listed unit, having 2 SPDT switches, aluminum housing, Teflon diaphragm, and stainless steel wetted parts, costs about $300. Extras, such as a calibrated set point scale, external setting dial, adjustable differential, or local indication, add to the cost.
Partial List of Suppliers:	W.E. Anderson Inc. (www.andinst.com) Automatic Switch Co. (www.asco.com) Barksdale (www.barksdale.com) Barton Instruments (www.barton-instruments.com) Bristol Babcock Inc. (www.bristolbabcock.com) Custom Control Sensor Inc. (www.ccsdualsnap.com) Dresser Instrument (www.dresserinstruments.com) Dwyer Instruments, Mercoid Div. (www.microid.com) Honeywell Sensing and Control (www.honeywell.com/sensing) Mid-West Instrument (www.midwestinstrument.com) SOR Inc. (www.sorinc.com) Square D Co. (www.squared.com) United Electric Controls Co. (www.ueonline.com)

Switches are point-sensing safety devices, serving to actuate alarms or initiate safety interlocks. In this section, both pressure switches and differential pressure (d/p) switches are discussed. Pressure switches detect a single process pressure and energize an electric circuit when that pressure has reached its set point. In case of d/p switches, the difference between two process pressures is being monitored and the switch is actuated if that difference reaches the preset limit.

PRESSURE SWITCH FEATURES

Features and Configurations

Pressure switches are used to energize and deenergize electrical circuits as a function of the relationship between the process pressure and a predetermined set point. Figure 5.13a shows some of the typical electrical contact configurations

© 2003 by Béla Lipták

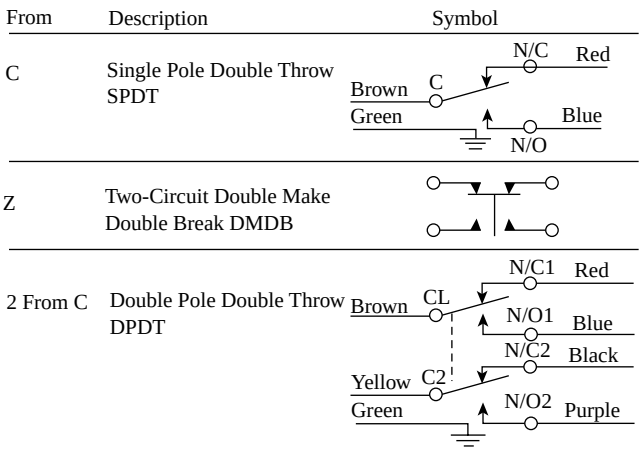

FIG. 5.13a
Standard electric contact configurations used in pressure switches.

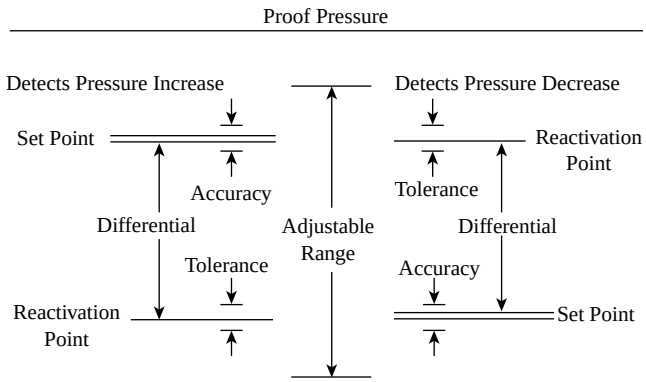

FIG. 5.13b
Pressure switch terminology.

and the standard wire colors used. The contacts are designated as normally open (N/O) and normally closed (N/C). In case of a single-pole-double-throw (SPDT) switch, as the process pressure or d/p changes, the normally closed (N/C) contact opens and the common (C) side of the switch is closed to the contact designated as normally open (N/O).

The electrical rating of pressure switches at 115-V operating level varies from 0.3 to 15 A, on AC or DC circuits. Generally, the dual control and the fixed differential switches have the lower ratings, and the double-adjustment units have the higher ratings. The available circuit arrangements are very flexible. Some of the standard arrangements include the single-pole-single-throw (SPST), SPDT, and the double-pole-double-throw (DPDT) designs, but units are available with up to four poles (Figure 5.13a).

Pressure switches are available to detect absolute, compound, gauge, and differential pressures, with inaccuracies up to ±1/2% of span. The sensing elements can be bellows, bourdon tubes, diaphragms, or other elastic sensors, which have already been discussed in Sections 5.3, 5.4, and 5.5. In addition, some designs utilize sealed piston or Belleville disc springs for their operation. The electric switching assemblies can be the snap-acting types, mechanical microswitches, or mercury switches. The latter has no mechanical moving parts and must be mounted level and in vibrations-free locations.

Terminology

Figure 5.13b illustrates some of the terminology used in connection with pressure switches. The pressure range within which the actuation point can be set is called adjustable range. The switch may actuate at its set point on rising or falling pressure as distinguished in the sketch. The set point is the pressure that actuates the switch to open or close an electric circuit.

The set point accuracy defines the band within which repetitive actuations will occur. Differential or dead-band is the difference between set point and reactuation point. For example, if a switch is set to actuate (close) at 100 PSIG (690 kPa) on rising pressure, it will close at that point, and when the pressure drops, it may not open again until the pressure has fallen to 95 PSIG (656 kPa). Here, the differential is 5 PSI (35 kPa). Tolerance is the repeatable accuracy of the reactuation point.

Selection

Pressure switch elements should be selected on the basis of service life and proof pressures. Most elastic elements will have a service life of close to a million cycles, if the cycle time is not less than 5 s. If longer service life or higher cycle frequencies are required, metal fatigue tends to limit the usefulness of elastic elements, and special designs, such as sealed piston elements, should be considered.

Selection of the adjustable range for a specific installation should consider both set point actuation accuracy and the life factor. For greatest accuracy, the set point should fall in the upper half of the range, but for a most favorable life factor, it should be in the lower half. The usually acceptable compromise is to locate the set point in the middle third of the range.

It is desirable to have an external calibrated knob provided on the pressure switch for set point adjustment. Uncalibrated or internal set point adjustments are inconvenient and seldom used on industrial installations (Figure 5.13c).

Differentials

The fixed differential pressure switches are furnished with a single adjustment for set point. These units are factory-set with close differentials amounting to 1/2 to 5% of span. On double-adjustment designs, both set points and reactuation points can be independently adjusted. The maximum differential in such designs is the range of the switch, while the minimum varies between 2 and 8% of span.

Pressure switches with dual control are also available (Figure 5.13d). Here, two independent switches mounted in the same housing are responding to the same process pressure in opening or closing two independent circuits.

© 2003 by Béla Lipták

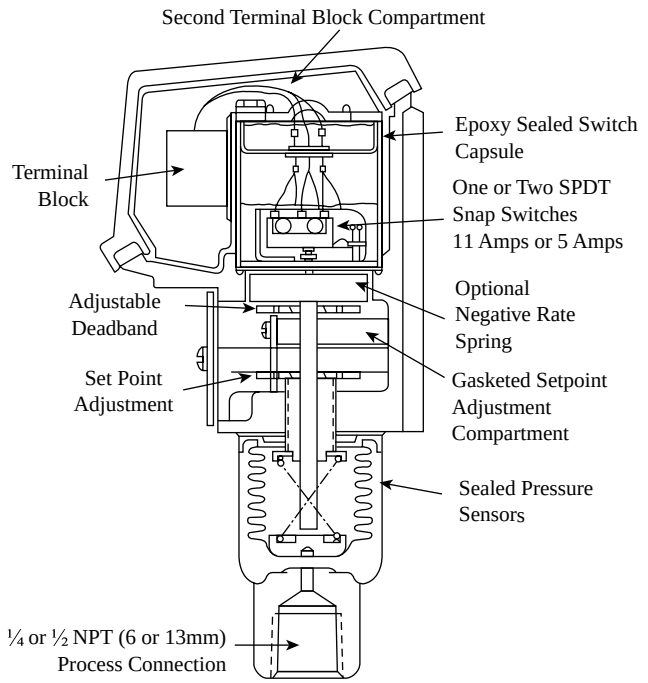

FIG. 5.13c

Set point and dead-band can be adjusted after the removal of a cover plate. Set point adjustment is done in a chamber that is separate from where the terminal block is located. Sensitive to 316 S/S welded; higher pressure. (Courtesy of United Electric Controls Co.)

Designs for Hazardous Area Applications

For pressure switches the electrical area classification is an important consideration. Table 5.13e provides some definitions for both hazardous locations and for the National Electrical Manufacturers Association (NEMA) standards. There are three standard case designs: the general-purpose (NEMA 1), the weather-resistant (NEMA 4), and the explosion-proof (NEMA 7) cases.

In some designs, the control mechanism is an integral part of the explosion-proof case, while in others, it can be removed in the field for maintenance. The set point is preferred to be externally adjustable so that the explosion-proof case does not need to be opened in order to change the set point. For added convenience of the operator, some pressure switches also provide continuous process pressure indication.

As shown in Figure 5.13f, flanged, flat-diaphragm type, explosion-proof switches are also available for those applications in which smaller pressure taps are undesirable, because they are likely to plug up.

Differential Pressure Switches

Transportation energy costs are increased when part of the energy is invested in overcoming the pressure drop across dirty filters. In order to identify the filters that are in need of cleaning, filter status indicators have been developed. One of these units is shown in Figure 5.13g. Here the pressure difference across the filter is applied to a spring-loaded piston.

In this design, the high pressure is applied to the top of a piston and the low pressure to the underside of the piston against which a spring presses. A given d/p produces a corresponding spring movement. A magnet is attached to the piston which, through a nonmagnetic body, positions a pivot magnet, thereby driving the pointer or tripping as many as four switches, or both. Since piston movement is not transmitted mechanically, there are no associated moving seals. The only seals required are the piston seals and the static seals for the end caps.

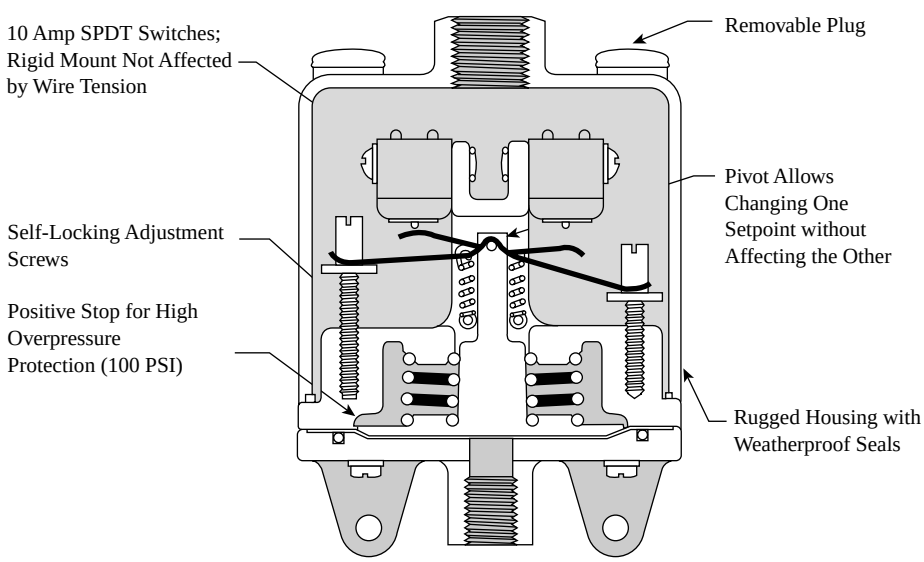

FIG. 5.13d

Two independent switches are acting in response to the same measurement. There is no interplay of dual settings; unique pivot assembly allows independent adjustment of either setting with no effect on the other. (Courtesy of Custom Control Sensors Inc.)

© 2003 by Béla Lipták

TABLE 5.13e
Definitions of NEMA Standards and of Hazardous Areas

NEMA Standards				*Hazardous Areas*	
Type 1	General Purpose	Indoor	Accidental contact	CLASS I	Locations in which flammable gases or vapors are or may be present in the air in quantities sufficient to produce explosive or ignitable mixtures.
Type 2	Drip-proof	Indoor	Falling noncorrosive liquids and falling dirt	CLASS II	Locations that are hazardous because of the presence of combustible dust.
Type 3	Dust-tight, raintight	Outdoor	Windblown dust, water, sleet, ice-resistant	CLASS III	Locations that are hazardous because of the presence of easily ignitable fibers or flyings, but in which such fibers or flyings are not likely to be suspended in air in quantities sufficient to produce ignitable mixtures.
Type 3R	Rainproof, sleet/ice	Outdoor	Same as above, plus melting of sleet/ice will not damage external enclosure or mechanisms	DIVISION 1	Locations in which hazardous concentrations in the air exist continuously, intermittently, or periodically under normal operating conditions.
Type 4	Watertight/dust-tight	Indoor/outdoor	Splashing water, outdoor seepage of water, falling or hose-directed water	DIVISION 2	Locations in which hazardous materials are handled, processed, or used, but where such materials are normally within closed containers or closed systems from which they can escape only in case of accidental rupture or breakdown.
Type 4X	Watertight/dust-tight corrosion resistant	Indoor	Same as above, plus corrosion resistant	GROUP A	Atmospheres containing acetylene.
Type 5	Dust-tight	Indoor	Dust and falling dirt	GROUP B	Atmospheres containing hydrogen, or gases or vapors of equivalent hazard, such as manufactured gas.
Type 6	Watertight/dust-tight	Indoor/outdoor	Temporary entry of water, limited submersion, formation of ice on enclosure	GROUP C	Atmospheres containing ethyl-ether vapors, ethylene, or cyclopropane.
Type 6P	Watertight/dust-tight	Indoor	Same as previous, plus prolonged submersion	GROUP D	Atmospheres containing gasoline, hexane, naphtha, benzine, butane, propane, alcohol, benzol, lacquer solvent vapors, or natural gas.
Type 7	Explosion proof/Class I Group D Hazardous Locations	Indoor	Hazardous chemicals and gases	GROUP E	Atmospheres containing metal dust, including aluminum, magnesium, and their commercial alloys, and other metals of similarly hazardous characteristics.
Type 9	Explosion proof/Class II Hazardous Locations	Indoor	Hazardous dust	GROUP F	Atmospheres containing carbon black, coal, or coke dust.
Type 11	Oiltight/Corrosion Resistant	Indoor	Oil immersion, corrosive effects of liquids and gases	GROUP G	Atmospheres containing flour, starch, or grain dust.
Type 12	Oiltight/dust-tight	Indoor	Fibers, lint, dust and splashing, seepage, and dripping condensation of noncorrosive liquids		

© 2003 by Béla Lipták

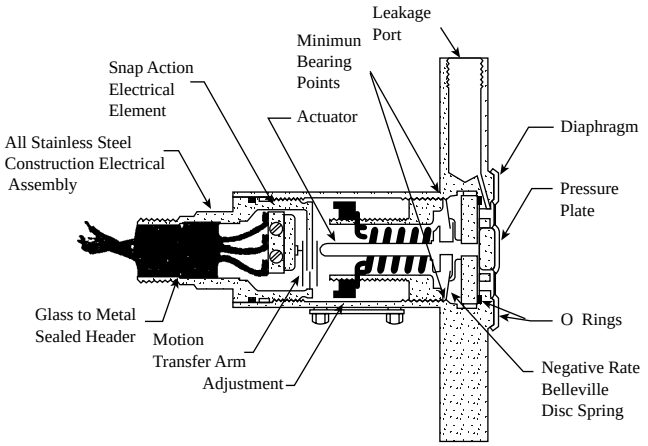

FIG. 5.13f

Flanged, explosion-proof pressure switch. (Courtesy of ITT Industrial Controls.)

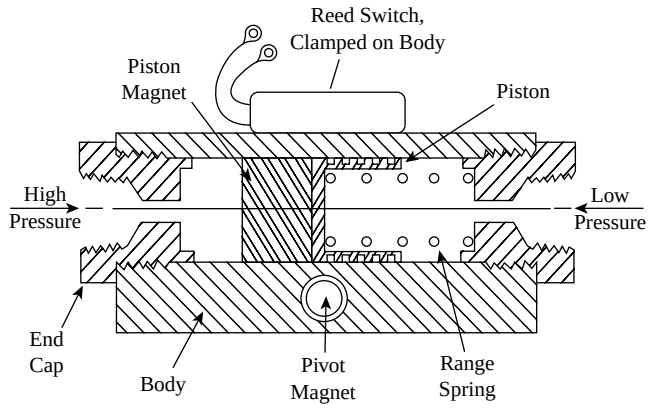

FIG. 5.13g

Piston type d/p switch for filter status monitoring.

Bibliography

von Beckerath, A., Eberlein, A., Julien, H., Kerstein, P., and Kreutzer, J., *WIKA Handbook on Pressure and Temperature Measurement*, U.S. ed., Lawrenceville, GA: Wika Instrument Corp., 1998.

Demorest, W.J., "Pressure Measurement," *Chemical Engineering*, September 30, 1985.

Dyer, S.A., *Wiley Survey of Instrumentation and Measurement*, New York: John Wiley & Sons, 2001.

Elliott, T.C., "Temperature, Pressure, Level, Flow: Key Measurements in Power and Process," *Power*, September 1975.

Figliola, R.S. and Beasley, D.E., *Theory and Design for Mechanical Measurements*, 3rd ed., New York: John Wiley & Sons, July 2000.

Godfrey, P.E., "Choosing the Right Pressure Switch," *Instruments and Control Systems*, April 1979.

Harvey, G.F., "ISA Transducer Compendium," Instrumentation, Systems, and Automation Society, Research Triangle Park, NC, 1969.

Herceg, E.E., *Handbook of Measurement and Control*, Pennsauken, NJ: Schaeviz Engineering, 1972.

Hughes, T.A., "Pressure Measurement," EMC series, downloadable PDF, Instrumentation, Systems, and Automation Society, Research Triangle Park, NC, 2002.

Instrumentation, Systems, and Automation Society, "Industrial Measurement Series: Pressure" (video VHS, PAL & NTSC), Research Triangle Park, NC, 2002.

Johnson, D., "Pressure Sensing: It's Everywhere," *Control Engineering*, April 2001.

Marrano, S.J., "How to Choose and Apply Pressure Transmitters," *Control*, March 2000.

Merritt, R., "Keeping Up with Pressure Sensors," *Instruments and Control Systems*, April 1982.

Moore, R.L., "Basic Instrumentation Lecture Notes and Study Guide: Measurement Fundamentals," Instrumentation, Systems, and Automation Society, Research Triangle Park, NC, 1976.

Rhodes, T.J., *Industrial Fundamentals for Measurement and Control*, New York: McGraw-Hill, 1972.

© 2003 by Béla Lipták

5.14 Vacuum Sensors

B. G. LIPTÁK (1969, 1982, 1995), **REVIEWED BY J. WELCH** (1995)
R. A. GILBERT (2003)

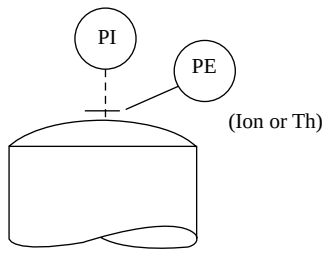

Flow Sheet Symbol

Design Variations:

A. Mechanical
- A1. Liquid manometers (Section 5.9)
- A2. Capacitance diaphragm manometers (Section 5.7)
- A3. Quartz helix gauge (Section 5.4)
- A4. Spinning ball viscous friction gauge
- A5. Molecular momentum gauge
- A6. Bourdon gauge
- A7. Bellows gauge

B. Thermal
- B1. Pirani (thermistor) gauge
- B2. Thermocouple, thermopile gauge
- B3. Convectron gauge

C. Ionization
- C1. Hot cathode (Bayard-Alpert)
- C2. Hot cathode (Suhultz-Phelps)
- C3. Cold cathode (Philips)
- C4. Cold cathode (Redhead)

D. Vacuum gauge calibration
- D1. McLeod gauge
- D2. Calibration reference tubes

Range:

See Figure 5.14a

Inaccuracy:

A1. Visibility limited to 0.1 mm
A2. Usually ±0.05% or reading at 1 torr, increasing as vacuum rises to about 3% of reading at 10^{-4} torr
A3. ±0.01% of full scale
A4. Usually ±3 to 4% of actual reading
A5. Usually 1 to 3% of actual reading
A6, A7. Limited range (only about 1% of atmosphere)
B1, B2, B3. From 2% of reading at point of calibration to over 10%; reading changes with composition
C. Reading changes with composition
C1, C2. 10% of reading or less
C3, C4. 10 to 20% of reading

Cost:

A1. $150 to $500
A2. $400 to $1000
A3. Over $5000
A4. Sensing head $2000; with controller, $11,000 to $14,000
A6. $50 to $100
A7. $75 to $300
B1. $350 to $700; with controller, $900 to $1100
B2. $300 to $800; with controller, $800 to $1200
B3. $120; tube and indicator, $500; tube, readout, and controller, $1100 to $1500
C1. $150 to $350; tube and controller, $1500
C2. $400

© 2003 by Béla Lipták

C3, C4. $200 to $600
D1. $200 to $600
D2. $300

Partial List of Suppliers:

Ametek Inc. (A6, A7) (www.ametekapt.com)
Cooke Vacuum Products (B, C) (www.cookevacuum.com)
Dresser Industrial Instruments (A6, A7) (www.dresserinstruments.com)
Dwyer Instruments Inc. (A1) (www.dwyer-inst.com)
Edwards High Vacuum International (B, C, D1) (www.edwards.boc.com)
Fountain Valley Instruments Inc. Televac Div. (hand-held) (www.telvac.com)
Fredericks Co. (www.frederickscom.com)
GFV Associates Inc. (B, C) (www.gfvassociates.com)
Granville-Phillips Co. (B, C) (www.helixtechnology.com)
Hastings (A, B, C, D2) (www.hastings-inst.com)
International Pressure Products Leopold Inc. (A6, A8, B1, B2, C)
Leybold Inficon Inc. (A) (www.inficon.com)
Marshalltown Instruments Inc. (A)
Meriam Instrument, a Scott Fetzer Co. (A5) (www.meriam.com)
MKS Instruments Inc. (A, B, C, D2) (www.mksinst.com)
Moeller Instrument Co. (A5) (www.moellerinstrument.com)
Rosemount Inc. Div. of Emerson (A2) (www.rosemount.com)
Stokes Div. of PermaH (D1)
Uehling Instrument Co. (A5, C1) (www.uehling.com)
Vacuum Technology Inc. (C) (www.vacuumtechnology.com)
Varian, Vacuum Products Div. (B, C) (www.varianinc.com)
Weksler Instruments Corp. (A6, A7) (www.monarchinstrcorp.com)

INTRODUCTION

From a working definition perspective, atmospheric pressure is considered to be 1.01 bar, 14.7 psia, 29.9 in. Hg, 760 mmHg absolute, 760 torr, 760,000 μm, or 101,300 Pa. An obvious impact of this statement is the potential for confusion due to the various unit options people have when it comes to reporting pressure. Fortunately, it is not an issue that the atmospheric pressure at sea level is not one fixed value, nor is there any deleterious impact of defining 1 atmosphere of pressure—the pressure at sea level on a clear cold nonstormy day, to be 1,013,250 dynes/cm^2. Industrial vacuum measurements are expressed in pressure units that reflect a pressure range and historic preference of the industrial practice. Thus, it is common for vacuum applications that are near atmospheric pressure to be described in inches of water or mercury. However, it is also expected that the pressure associated with a semiconductor metalization industrial application that uses physical vapor deposition be described in Pascals, microns, or perhaps millitorr units.

The reader should also be prepared to deal with pressure unit selection variations with respect to the pressure units that appear on various vacuum pressure gauges. The unfortunate realities when dealing with industrial applications that require a vacuum environment is that there is no universal vacuum gauge that will work for all applications and that different types of gauges will use different pressure units. The normal measurement ranges for various gauges are summarized in Figure 5.14a. A variety of pressure units will be used in this section.

People new to vacuum gauges and vacuum technology should also be prepared to deal with potentially confusing vocabulary when describing various pressure situations. People with different technical backgrounds may use the terms low vacuum, low pressure, and/or high vacuum, and high pressure imprecisely at different times. The reader should refer to a pressure that is very much lower than atmospheric pressure as a low pressure or a high vacuum environment. For a process situation that is very close to but below atmospheric pressure, the terms to use would be low vacuum or high pressure. In all situations, when a vacuum is referenced or described, the maximum pressure value being considered is atmospheric pressure. Therefore, vacuum chambers located in Denver, CO, or Geneva, Switzerland, have maximum pressure values that are less than 1 atm (760 mmHg).

VACUUM GAUGE CLASSIFICATIONS

There are a variety of ways to categorize vacuum gauges. Grouping gauges by operational principle is one common way. Thus, the Bourdon tube and the bellows gauge are classified as mechanical gauges, but the spinning element gauge is know as a momentum transfer gauge. Figure 5.14a provides a list of vacuum gauges and their operating range grouped by operational principle. Vacuum gauges that function because of a mechanical principle typically perform a differential pressure measurement.

Gauges that operate within the same pressure range can also be grouped together. Pirani gauges work in the same general pressure range as thermocouple (TC) gauges but the

© 2003 by Béla Lipták

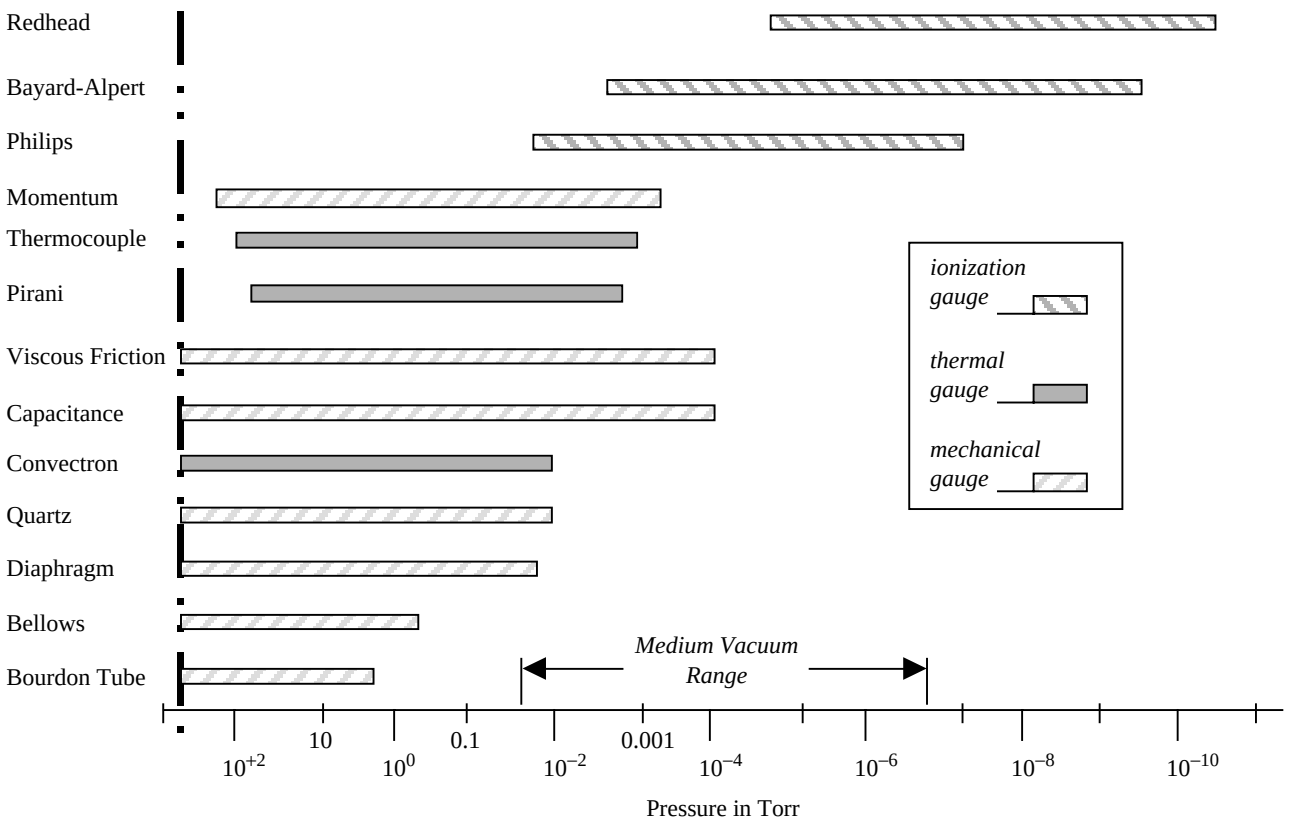

FIG. 5.14a
Ranges of the different types of vacuum gauges.

ion gauge would not be grouped with these two. A third way to categorize vacuum gauges is to identify if they actually make a direct or an indirect pressure measurement. Thus, a direct vacuum pressure measurement gauge will provide a new measurement signal value simply because the pressure being measured changes. The indirect pressure measurement gauge is actually monitoring some other parameter of the system that proportionally responds as the pressure of the system changes. A vacuum gauge that uses a TC as the pressure-sensing element is one example of an indirect pressure gauge. The increase or decrease in pressure near the thermocouple does not directly alter the electromagnetic force generated by that TC. However, that pressure change does reflect a change in the molecular population near the TC. This molecular density change affects the heat transfer near that TC, which, in turn, alters the value of voltage, measured across the TC.

Finally, it is also important to identify if the vacuum gauge performs an absolute pressure measurement. Similar to pressure gauges designed for above atmospheric pressure measurement applications, vacuum pressure gauges may provide an absolute or gauge pressure reading. Naturally, it is important for instrumentation and controls personnel to know which type of pressure measurement is being taken. The adjustment from gauge to absolute pressure is straightforward and may be provided as an electronic correction within the gauges. Elastic element based vacuum gauges are simple and inexpensive examples. If the vacuum is measured against an internal vacuum reference, the instrument is called an absolute pressure sensor; when the vacuum is compared to the barometric pressure, the instrument will measure gauge pressure and is sometimes identified as a compound pressure gauge. Examples of absolute pressure vacuum sensors include the copper-beryllium alloy bellows elements shown in Figures 5.3a, 5.3b, and 5.3c. Diaphragm-type vacuum gauges (Figure 5.5f) use hermetically sealed, thin-walled, copper-beryllium alloy, circular capsules. Similarly to the diaphragm and bellows elements, thin-walled, multiturn spiral Bourdon tube elements can also be used to measure vacuum when a second reference Bourdon tube, containing a near absolute zero vacuum, is also provided as reference.

MECHANICAL VACUUM GAUGES

Manometers

Manometers (Section 5.9) that use a liquid working fluid represent the classical differential pressure measurement device. They are simple and inexpensive and some of their design variations are also shown in Figures 5.9a, 5.9c, 5.9h, and 5.9i. The simplest design for a vacuum pressure measurement application is a U-tube with one leg connected to an evacuated reference chamber, while the other is exposed to the unknown process pressure. The difference between the two column

© 2003 by Béla Lipták

heights indicates the process vacuum. The precision of reading the manometer is limited to about 0.1 mm when detected by the naked eye. Inclining the manometer tube and using lower-density filling fluids (low-vapor-pressure oils) can improve the sensitivity of the readout to about 10 mtorr. When the units are operated at constant temperatures and are provided with micrometer readouts, vacuums down to the 1 mtorr level can be detected. Manometers are not used in vacuum related processes that require medium to high vacuum or a clean vacuum environment. This limitation reflects the possible vaporization of the filling fluids at high vacuums or at high temperatures. Density variation and light refraction can also make it difficult to read the gauge. Although liquid manometers have limited use in today's process environment, the term manometer has become ubiquitous. It is now generally applied to vacuum gauges that make differential measurements, but do not necessarily contain a working fluid.

Capacitance Manometers

The capacitance-type pressure detectors are examples of manometers that do not have a moving fluid as a sensor element. Capacitance manometers have already been described in connection with Figure 5.7i. These gauges provide high precision differential measurements because of their ability to detect extremely small diaphragm movements. The thinnest diaphragms are capable of measurement down to the 10^{-5} torr level, while for the thicker diaphragms the measuring range can be extended to atmospheric or higher pressures.

A single capacitance manometer can report vacuum pressures values over a four- or five-decade range. Their inaccuracy in units of percent reading rises from about 0.1 to about 3% as the vacuum rises from 1.0 torr to 10^4 torr. These devices, also called micromanometers, are differential pressure detectors that use a flexible diaphragm in an electrical capacitance circuit. One plate of the capacitor is the pressure-sensitive diaphragm in the bridge circuit. The DC balancing voltage connected across the plates of the capacitor exerts an electrostatic force. When a pressure change occurs, the diaphragm deflects and the electrostatic force restores the balance that opposes the initial diaphragm movement. The magnitude of this rebalance voltage is a measure of the pressure exerted on the flexible diaphragm.

The materials used in single capacitance manometer detectors include Monel, Inconel, high-nickel alloys, and ceramics. The single-sided design illustrated in Figure 5.14b is corrosion-resistant because only one side of the diaphragm is exposed to the process vapors. Some models can operate at temperatures up to 750°F (400°C). The two main sources of error are nonlinearity and temperature effects. As an alternative to temperature compensation, the sensor can also be heated and operated at a constant temperature.

Quartz Helix Vacuum Gauge

The quartz helix vacuum gauge is an example of a mechanical vacuum gauge that makes a differential pressure measurement without a working fluid element. The quartz helix element

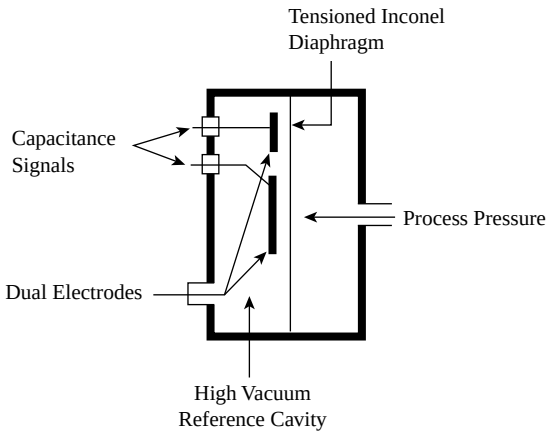

FIG. 5.14b
One-sided capacitance manometer detector can also be used on corrosive services.[1]

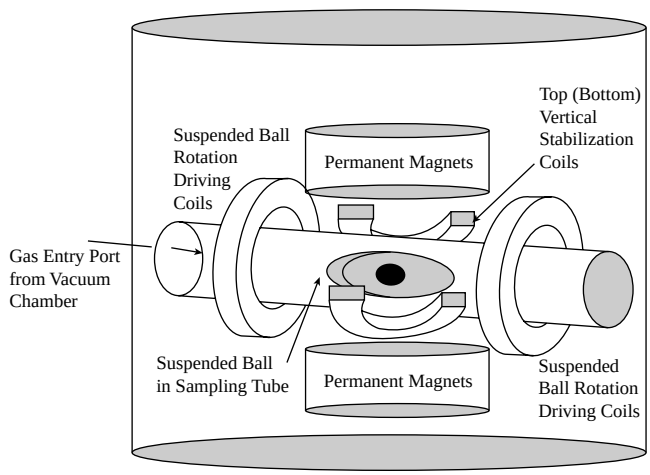

FIG. 5.14c
Spinning ball element type vacuum gauge.

and the mirror used to detect its deflection have already been discussed in connection with Figure 5.4i. When used for vacuum detection, two quartz Bourdon elements are formed into a helix. The reference tube contains a sealed vacuum, while the measuring tube is connected to the unknown process vacuum. The pressure difference between the two (at constant temperature) results in an angular deflection, which is detected optically. The optical readout is used to eliminate friction effects and to guarantee high resolution (about one part in 100,000). The main advantages of this detector are its precision and the corrosion resistance of quartz; however, it is an expensive gauge.

Viscous Friction of Spinning Ball

At high vacuums, viscosity and friction are pressure-dependent. This instrument detects vacuum pressures down to 10^7 torr by detecting the deceleration caused by molecular friction on a levitating and spinning ball in a magnetic field. As suggested in Figure 5.14c, the vacuum is measured in this instrument by

© 2003 by Béla Lipták

first driving the ball until it reaches a rotational speed of about 425 r/s. When the drive is turned off, the rotational speed drops as a function of the viscous friction of the process vapors. When the speed has dropped to 405 r/s, the ball is accelerated again. The pressure of the gas in the gauge is related to the time that it takes for the speed to drop from 425 to 405 r/s. As the process pressure decreases, the time needed to reach the lower rotational speed increases.

This instrument has several process advantages. Since its wetted parts are made of stainless steel, the gauge is suitable for corrosive services. It is also suited for operation at baking temperatures up to 750°F (400°C). When calibrated, the inaccuracy (uncertainty) can be as low as 1.5% of the reading. Without calibration, the uncertainty is 4% or more.

Molecular Momentum Vacuum Gauges

Molecular momentum type gauges have two basic working parts: a rotating and a restrained cylinder. The gas molecules from the vacuum chamber come in contact with the rotating cylinder (at a constant speed of 3600 rpm), experience a momentum change, and are set in motion in the direction of rotation. These molecules acquire energy from contact with the spinning cylinder, and then, in turn, strike and transfer that energy to the restrained cylinder. The pressure measurement is possible because these molecular collisions move the restrained cylinder a distance that is proportional to the energy transferred and represents a function of the number of gas molecules in that space. The number of molecules is related to the absolute pressure of the gas. The pointer attached to the restrained cylinder indicates the gas pressure on the scale, somewhat similar to the operation of the viscous drag gas density sensor in Chapter 6.

The energy transferred in momentum transfer gauges is not just related to the number of molecules (pressure) and the velocity of molecules. The molecular weight of the gas is also a factor. Thus, the full-scale range of the gauge depends on the type of gas to be detected. For air, the range is 20 to 10^{-3} mmHg (2.7 to 1.3×10^{-4} kPa), while for hydrogen, the maximum reading on the instrument is 280 mmHg (37 kPa). Thus, molecular momentum transfer vacuum gauges have to be calibrated for each application.

Molecular momentum transfer gauges give continuous direct readout, but are not usually available as a signal transmitter for remote indication or control. The inaccuracy of the unit is between ±5 and 25%, with accuracy decreasing at lower pressures. Additional inaccuracy can be caused by process temperature variations, which in the range of 50 to 100°F (28 to 56°C), can amount to 2%. External vibration in the range of 50 cps should be protected against by the use of bellows couplings on the process connection. The gauge is not damaged by exposure to atmospheric pressure, but the sample from the process has to be kept clean, free of dust, oil, or other particles.

Mechanical Linkage Vacuum Gauge

The only vacuum gauges that operate by a mechanical linkage are the ones used for vacuum measurements, such as the Bourdon gauge and the bellows gauge. The Bourdon gauge is also know as a C tube gauge and operates by the curving and uncurving of a hollow tube that is connected to the process under vacuum. The movement of this "C" shaped tube alters the position of a needle pointer connected to the end of the sensing tube by a ratchet and spring mechanism. Although inexpensive and robust, the Bourdon gauge will demonstrate a memory effect and does not fit into automated data recording or process control situations. In addition, it has a limited range and is not used in vacuum processes that operate at pressures below 1 torr.

The Bellows vacuum gauge is another example of a mechanical linkage type gauge. In this case, the bellows expands or contracts based on the pressure difference across the inside and outside of the bellows unit. The gauge readout is also the result of a mechanical interaction between the bellows and the needle pointer. These gauges do not have electronic readouts.

THERMAL VACUUM GAUGES

Heat transfer is a useful characteristic of a gas with respect to the operational basis for a grouping of vacuum gauges. If a heated element with constant power input is placed in a vacuum environment, the surface temperature of that element will be a function of the heat conductance of the process gas, which also relates to the pressure of the process gas near the heating element. Thermal vacuum gauges consist of three basic elements: a heater, a temperature sensor, and a compensator for process temperature variations. There are two basic designs, depending on the type of temperature sensor used: the resistance wire and the TC. In general, thermal vacuum gauges measure pressures down to 1 mtorr (10^{-3} mmHg, 0.13 Pa) absolute pressures. Although this limit can be extended with special designs involving special amplifiers and liquid nitrogen cooling around the gauge tube to reduce radiation losses, an ion gauge is the single gauge of choice when the pressure drops below 10^{-4} torr. Usual applications for thermal vacuum gauges include refrigeration, vacuum furnaces, freeze-drying, air conditioning, pharmaceutical productions, and the manufacture of thermal food containers.

Thermal vacuum gauges may be orientation sensitive. Once attached to the vacuum system and calibrated, the pressure readings from the gauge are dependent on that physical location and orientation. If the gauge is remounted at the same location but rotated from its original position, the gauge may need to be recalibrated. Most thermal vacuum gauge manufacturers will indicate if their gauge is position sensitive and also indicate on the gauge housing the recommended gauge orientation.

© 2003 by Béla Lipták

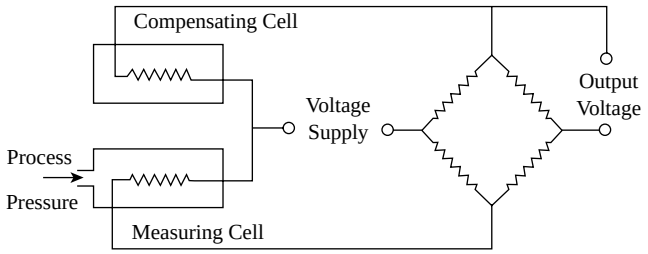

FIG. 5.14d
Resistance wire (Pirani) vacuum detector.

Pirani Vacuum Gauge

The Pirani gauge is a popular example of a thermal vacuum gauge. In this device, a constant current heats a filament that is cooled by the gas present in the vacuum environment. Since the amount of heat transferred changes with the number of molecules, the equilibrium temperature, which is detected as the resistance of the metal wire, ribbon, or thermistor element, is a function of the gas pressure near the wire. Figure 5.14d outlines the components of operation for the Pirani gauge. The heating and sensing elements are often combined as part of a Wheatstone bridge type sensing circuit. A second resistance wire, which is enclosed in a reference vacuum, is used to compensate for process temperature variations. The readout device detects the amount of current or voltage that is necessary to return the bridge circuit to balance after a change in the vacuum being measured.

The standard pressure-sensing range for a Pirani gauge is between 10^{-3} and 1 mmHg (0.13 to 133 Pa) absolute. The inaccuracy of the gauge is about 2% at the calibration pressure and ±10% over the operating range. Maximum output signal is about 0.1 mA at full-scale reading.

Pirani gauges are relatively inexpensive and convenient to use. They are not used for reliable pressure measurements higher than 1.0 torr, because at higher pressures the thermal conductivity of gases does not decrease with the decrease in pressure. The scale of the Pirani gauge is linear between 10^{-3} to about 2×10^{-2} torr. Above these pressures it becomes roughly logarithmic. The two scales, when provided, are usually calibrated in terms of air. However, the gauge is gas dependent since different gases have different thermal conductivity. Therefore, the Pirani gauge is composition-dependent and needs to be calibrated for the process gas in the application.

Pirani gauges are not highly accurate. As they depend on the detection of thermal conductivity, the surface conditions and emmissivity of the heated elements do affect the reading. As these surfaces are coated, oxidized, or carbonized, their temperatures rise and the sensor is likely to read high by as much as 2×10^{-2} torr. This represents a very large error at the low end of the pressure range. Another substantial error source is changes in the bridge voltage.

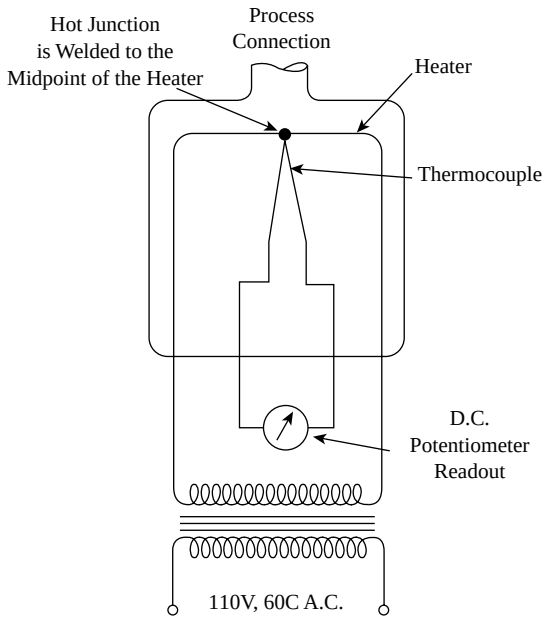

FIG. 5.14e
Single thermocouple vacuum gauge.

Thermocouple Vacuum Gauge

As shown in Figure 5.14e, the single TC detector consists of a wire heated by the passage of constant AC or DC current. A TC is welded to the center of this heated filament, thereby providing means to measure the temperature of the filament directly. An opening in the tube is provided for connection to the vacuum system being measured.

In operation, the constant current passing through the heater wire is in the order of 20 to 200 mA, and the TC sensor develops a full-scale output in the order of 20 mV DC. For any constant value of current through the filament, the temperature increases as the pressure in the tube is reduced. The temperature detected by the TC depends on the thermal conductivity of the gas surrounding the junction. For the same gas, thermal conductivity is related to pressure when the pressure is at or below 1.0 torr. Like the Pirani gauge, TC gauge response is process gas dependent and the gauge must be calibrated for specific applications.

The available readout devices are as varied as the receiving instruments that measure TC output signals. Sensitive millivolt meters and potentiometers are common choices. At higher ranges, such as 5 to 10^{-2} mmHg (665 to 0.13 Pa), dual scales are usually used, while for the standard range, 0.1 to 10^{-3} mmHg (133 to 0.13 Pa), a single scale is sufficient. The reading inaccuracy at midscale is ±2%, while ±10% covers the full range. On multistation installations, a single readout device can serve several TC gauges through a manual selector switch. Because all filaments are on at the same time, the readings are instantaneous.

The filament temperature is kept below 400°F (250°C) to reduce the possibility of the sample gases decomposing or forming a deposit on the gauge tube elements. Compensation can

© 2003 by Béla Lipták

be provided for process temperature variations, which otherwise would introduce an error by affecting the filament temperature. This is achieved by the use of a reference gauge that has been fully evacuated and sealed. The same current and voltage are applied to both the measuring and the reference gauges. The temperature of the two heater wires is then compared, and the difference is used as a measure of process vacuum. The reference tube compensates for ambient temperature changes because the two cells are at the same temperature. Generally, the inherent low accuracy of these sensors does not make it worthwhile to compensate for ambient temperature variations.

It is also important that the filament current and voltage be carefully maintained for stable calibration. Filaments should not become dull or tarnished due to contamination because this would cause radiation losses affecting calibration. One way to overcome this problem is to precoat the filaments so that further contamination would have no effect. Unfortunately, precoating tends to impair gauge sensitivity. However, several precoated TCs connected in series, a thermopile, provide extra potential output that compensates for sensitivity losses due to filament precoating.

Thermopile Vacuum Gauge

To increase sensitivity, thermopiles can be used to detect heater temperature. A thermopile vacuum gauge is a series of TCs, and a typical design is shown in Figure 5.14f. In this design, the TCs (A and B) are heated by low-voltage alternating current so that the heater and the temperature-sensing functions are combined in the same noble (noncorrosive) metal thermopile. A change in process pressure results in a change of thermopile temperature causing a new DC output from the TCs. A third unheated thermocouple (C) is included in the circuit to compensate for operating process temperature variations. This couple is the same size as the heated ones, but it is connected in opposite polarity. A change in process temperature develops voltages in all the TCs, but the transient effects are equal and opposite in the heated and unheated elements. Therefore, compensation is achieved.

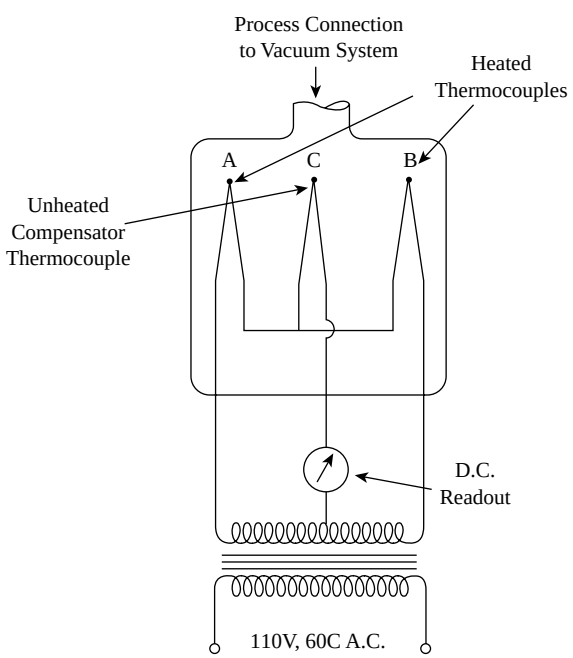

FIG. 5.14f
Multiple thermocouple (thermopile) vacuum gauge.

Thermopile vacuum gauges have the same features and accessories normally associated with a single TC gauge. However, the following additional characteristics should be noted. First, because of the noble metals used in the thermopile, oxidation of the couples does not occur. Second, the operating temperature of the heated thermopile is lower than that of the hot filament used in the single couple design. Therefore, the probability of sample gas decomposition or deposit formation is remote. Third, thermopile gauges that withstand several thousand PSIG overpressures are available. Fourth, the gauges are corrosion resistant, rugged under demanding conditions, and provide stable calibrations. The cold junctions are kept at ambient temperature by heavy mounting studs. Thus, the amplified electromagnetic force generated between the hot and cold junctions tends to be a stable signal that reflects the temperature change at the hot junctions. Finally, accurate readings are obtained in the range of 10^{-1} to 10^{-3} mmHg (13 to 0.13 Pa), but extended coarse detection is feasible over a broader range from 100 mmHg (13 KPa) to 10^{-4} mmHg (1.3×10^{-2} Pa) absolute pressures.

Convectron Vacuum Gauge

A convectron gauge is similar to thermal conductivity type vacuum detectors, except that it provides a wider (six-decade) range, from 10^{-3} to 1000 torr within a single gauge. The heat loss sensor is a temperature-compensated gold-plated tungsten wire that detects both conduction and convection cooling effects. At lower pressures (higher vacuums), it operates as a thermal conductivity vacuum gauge, while at higher pressures (in excess of 1.0 torr), it depends on convective cooling as the sensing principal. In this pressure regime, the process gas molecules are circulated in the sensor tube by gravitational forces.

In most respect, the features and limitations of convectron vacuum gauges are similar to the Pirani and TC gauges, but in addition to the extended range, there are some other notable differences. These include a lower sensor wire temperature, which is likely to reduce the coating and carbonization on the sensor wire surface. The gauge tube is stainless steel and can be baked to up to 300°F (150°C), when not operating. The maximum ambient or operating temperature is 122°F (50°C). The bridge circuit is an integral part of the gauge tube, which is vibration and position-sensitive (it must be horizontal). The gauge is calibrated for nitrogen, and must be recalibrated when used on other gases.

© 2003 by Béla Lipták

IONIZATION VACUUM GAUGES

Ionization vacuum detectors have been available since 1916. However, practical, reliable, and sturdy ionization vacuum gauges did not come into common use until the 1930s. Today, ionization gauges are routinely used to detect pressure levels from 10^{-4} to 10^{-9} torr. All ionization vacuum gauges detect an electric current that is generated from the ionization of the gas whose pressure is being measured. Ion gauges are distinguished by the method applied in producing the ions. To convert a gas molecule into a positive ion, an electron must be removed. If an atom or a molecule is supplied with energy equal to its ionization potential, an outer orbit electron will escape and a positive ion will be created. The approximate energy values required for ionization range from 5 to 30 eV. If this energy is supplied at a constant rate and sufficient atoms and molecules are available, the ions will be produced at a similarly constant rate. This ion stream is directed to the gauge's cathode, and the current that flows through that cathode is proportional to the pressure of the gas in the gauge. The initial ion current is also proportional to molecular weight. The ionic current generally rises with molecular weight. In any case, calibration is usually done with dry nitrogen or air. The various designs for ionization gauges can be grouped by the method used to generate and direct the ion current. One broad grouping for ion gauges includes hot cathode and the cold cathode gauges.

Hot Cathode Ionization Gauges

In the Bayard-Alpert hot cathode filament vacuum gauge illustrated in Figure 5.14g, the ionization energy is supplied by electron bombardment. The electrons are derived from thermionic emission from the hot filament. As these electrons are attracted to and passing through the helix shaped grid, they acquire kinetic energy. When the electrons finally collide with the gas molecules from the vacuum system, positive ions are produced. These ions are then attracted to the negatively charged collector electrode in the center of the grid to form an ion current. At constant accelerating voltage, the number of ions formed is proportional to the gas pressure if it is below 10^{-3} mmHg (0.13 Pa). Variations on the design include capping the end of the grid to prevent electron escape. A fine wire collection electrode reduces the x-ray-generated photo current. A spare emission filament is also often provided. At higher pressures, the relationship between plate current and pressure is not linear. This is because the mean free path becomes so short that an ionized molecule may pick up a free electron to become a molecule before it reaches the collector plate.

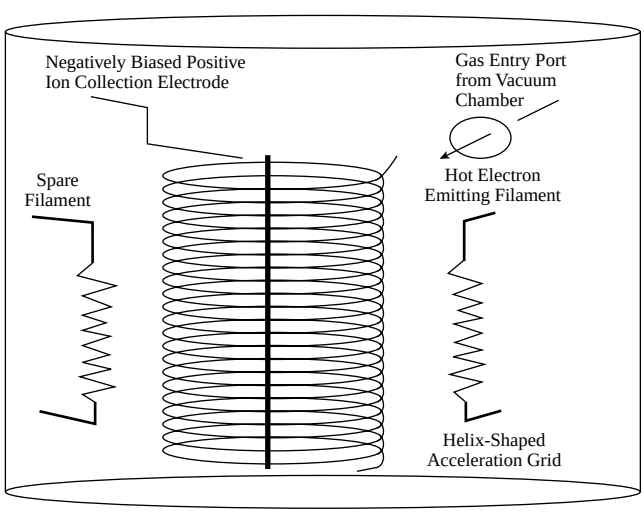

FIG. 5.14g
Hot cathode ionization vacuum gauge. (Courtesy of Bayard-Alpert.)

The accuracy of a hot cathode ionization gauge is poor because the number of gas molecules to be measured is very small. At an absolute pressure of 10^{-5} mmHg (1.3×10^{-3} Pa), the inaccuracy would be about 10%. The vacuum range detectable by the hot cathode gauge is 10^{-3} to 10^{-11} mmHg (1.3×10^{-1} to 1.3×10^{-9} Pa). The minimum span of the readout device is one decade, and it can be furnished with five or six ranges. Range switching can be automatic or manual from the instrument's front panel.

The sensitivity of the hot cathode gauge is 100 μA/μm (10^{-3} mmHg) pressure. The readout device can be combined with thermocouple readout to extend its coverage to vacuums in the range of 1 to 10^{-3} mmHg (133 to 0.13 Pa). This is a common practice, but a protective relay circuit is also furnished to prevent filament burnout by keeping it off at pressures higher than 10^{-3} mmHg. Besides multirange indicators, the readout device can provide signals for actuate electrical control and alarm circuits. When several ionization sensors are involved, the output signals can be multiplexed to reduce the number of signal detectors and pressure monitors, reducing total system cost.

The hot filament vacuum gauge provides a wide pressure reading range with fast response. Its application is limited to gases that will not decompose on the hot filament. The glass ionization tube, by its nature, is subject to mechanical damage. However, gauges for industrial process applications are commercially available. The filament current is controlled in such a way that a constant flow of electrons is emitted from it. In some designs, calibration is maintained by controlling the grid charge so that if emissivity of the filament is decreasing, the grid receives a correspondingly greater charge to maintain the entire circuit in equilibrium.

The limitations of the hot-cathode design are related to the high filament temperatures (about 4000°F, or 200°C) involved. At such temperatures, the incandescent filament tends to deteriorate and is also susceptible to chemical attack. The sorption of gas by the hot filaments and the degassing that follows is another potential error source. These effects are addressed by alternative gauge designs that use large diameter tubes and minimize in vacuum connection lengths.

As suggested above, various modified Bayard-Alpert hot cathode vacuum gauges are available from different ion gauge manufacturers. One example is the Schultz and Phelps modification shown in Figure 5.14h. This gauge covers the

© 2003 by Béla Lipták

vacuum range of 1 to 10^{-5} torr and can be obtained in an integrated unit with the Bayard-Alpert unit, when a wider vacuum range needs to be covered.

Cold Cathode Ionization Gauges

The cold cathode vacuum gauge is a composition sensitive gauge traditionally known as Philips gauges, after its first manufacturer, or a Penning gauge after F.M. Penning, who outlined its operating principle in 1937. The basic difference between cold and hot cathode gauges is in the method by which ions are produced. In the hot filament unit, the electrons are derived from thermionic emission. In the cold cathode design, a high-potential field withdraws the electrons from the electrode surface. Because the rate of electron emission is lower in the cold cathode units, the collision frequency between gas molecules and electrons would also be lower if the electrons traveled in a straight path. To increase the path length of the electrons, a magnetic field is created around the tube to deflect the electrons. Thereby, the emitted electrons spiral as they move across a magnetic field to the anode (Figure 5.14i). This spiraling action greatly increases the electron path of travel and the corresponding chance of electron collision with gas molecules from the vacuum chamber. The overall result is greater sensitivity of the cold cathode gauge than that of the hot cathode.

The inaccuracy of the cold cathode unit is about 20% at an absolute pressure of 10^{-5} mmHg (1.3×10^{-3} Pa). The gauge response is gas molecular weight dependent and its detectable vacuum range is from 10^{-2} to 10^{-7} mmHg (1.3 to 1.3×10^{-5} Pa). As with the hot cathode gauges, the minimum span is one decade and readout devices are available with one, two, or three ranges, which are selected automatically or by manual action at the front of the instrument. The gauge sensitivity is 5 mA/μm micron pressure.

There are several advantages of the cold cathode gauge relative to the hot cathode gauges. First, they cost less. Second, they are more robust and do not burn out as easily. Third, they do not subject the process gas to thermal stress. Cold cathode gauge disadvantages include lower accuracy, nonlinear output signal, and gas take-up caused by the high-voltage operation. In order to remove polymerized organic contaminants, periodic cleaning of the electrodes and the vacuum chamber is required.

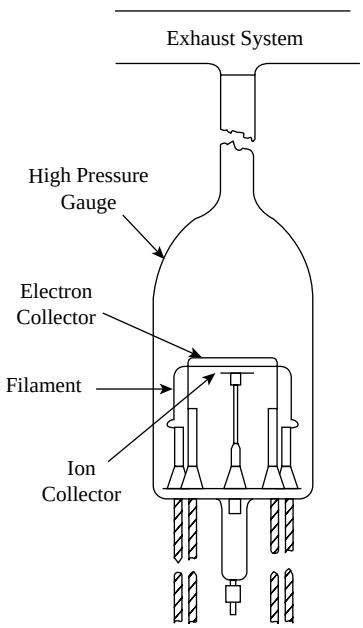

FIG. 5.14h
Hot cathode vacuum gauge. (Courtesy of Schultz-Phelps.)[2]

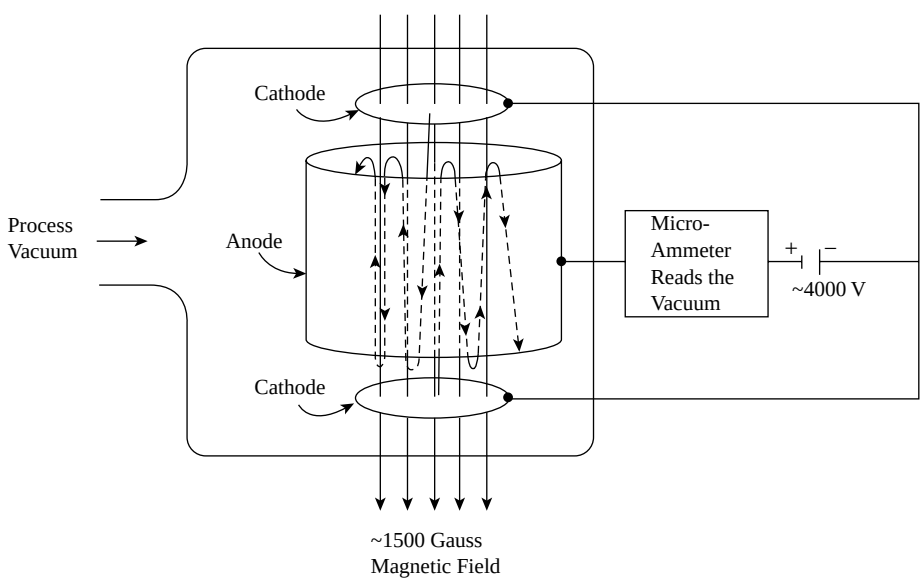

FIG. 5.14i
Philips cold cathode ionization vacuum gauge. (The electrons travel from the cathode to the anode through a path of multiple spiral oscillations which increase the opportunity for them to encounter and ionize molecules.)

© 2003 by Béla Lipták

Similar to the hot cathode gauge, manufacturers have offered modified designs for the cold cathode gauge. One example is a modification developed by Paul Redhead. In the Redhead gauge, a cylindrical electrode is configured around the anode that has a probe shape at the center axis. This arrangement is like an inverted magnetron: the electrons ionize the gas molecules while they are spiraling in toward the central anode, while the gas ions are collected on the cylindrical cathode surface. The Redhead gauge operates at around 5000 V in a 1000-Gauss magnetic field and can detect vacuums in the 10^{-6} to 10^{-12} torr range.

During the 1990s, a combination ionization gauge was designed. This gauge is basically a cold cathode unit but is furnished with a hot cathode serving to trigger the discharge from the cold cathode. This design extends the detectable pressure range to 10 decades, or from 10^{-4} to 10^{-14} mmHg (1.3×10^{-2} to 1.3×10^{-12}) absolute.

VACUUM GAUGE CALIBRATION

Vacuum gauge calibration is an issue for two reasons. First, a single vacuum gauge type does not work over the total vacuum pressure range. Second, most vacuum gauges do not directly measure pressure, and the pressure reading provided by the gauge is dependent on a property of the gas molecules being measured. Some common ways to calibrate vacuum gauges are provided below.

McLeod Vacuum Gauges

The McLeod vacuum detector, or barometer gauge, is the classic reference or calibration gauge. Figure 5.14j shows one version of this gauge. In this design, the unit is stationary, and a piston is used to trap the rarefied gas. The filling of the gauge with mercury is done through the process connection. This improved design does not use a dead-ended capillary, and, therefore, the problems associated with keeping the capillary clean are eliminated. The diagram on the left side of Figure 5.14j shows the unit just prior to the taking of a measurement. As the piston with micrometer adjustment is moved up, the rarefied gas is trapped when the mercury reaches point D; thus, the initial volume (V_1) is the volume between points A and D. When the instrument is connected to the vacuum system, the mercury level in the reservoir is below point D to allow trapped gases to be liberated. As the piston is moved up, the mercury fills the large bulb up to point C. At this point, a reading can be taken on the dual scale if the pressure to be detected is in the mmHg range. If the vacuum is higher, the piston is moved further up, increasing the compression ratio until the mercury reaches point B above the small bulb. In this case, the reading is taken on the micron side of dual scale.

McLeod gauges can cover the vacuum range between 1 and 10^{-6} mmHg (133 and 1.3×10^{-4} Pa). At pressures below 10^{-4} mmHg (1.3×10^{-2} Pa), the reading accuracy is limited by capillary effects. These gauges are laboratory instruments that measure on a sampling rather than on a continuous basis. They are not recommended for industrial installations.

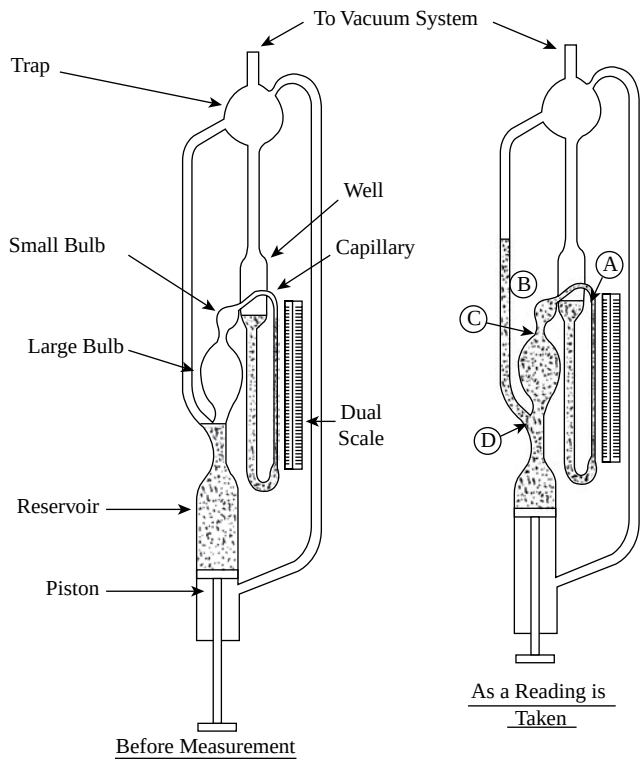

FIG. 5.14j
Piston McLeod vacuum gauge.

Calibration Reference Tubes

A relatively new method of vacuum gauge calibration involves the use of calibration reference tubes. These tubes are available from most gauge manufacturers for application with their specific gauges. These reference tubes are fundamentally evacuated, sealed vacuum tubes accurately calibrated to precisely simulate an operating pressure environment of the gauges to be calibrated. The tubes permit quick and easy gauge recalibration by simply connecting the gauge to be calibrated to the appropriate reference tube and adjusting the gauge's pressure reading to reflect the value stated on the reference tube.

VACUUM CONTROLLERS

Vacuum gauges are one part of a vacuum process instrument system. In the complete instrument system, the process vacuum pressure is compared to a desired set point value, and, if necessary, a corrective signal is sent to a final control element. The vacuum controller is the component of the system that will alter a control signal to adjust the vacuum pressure when a process disturbance occurs. Process controllers do not have to have a pressure readout system; they only require

© 2003 by Béla Lipták

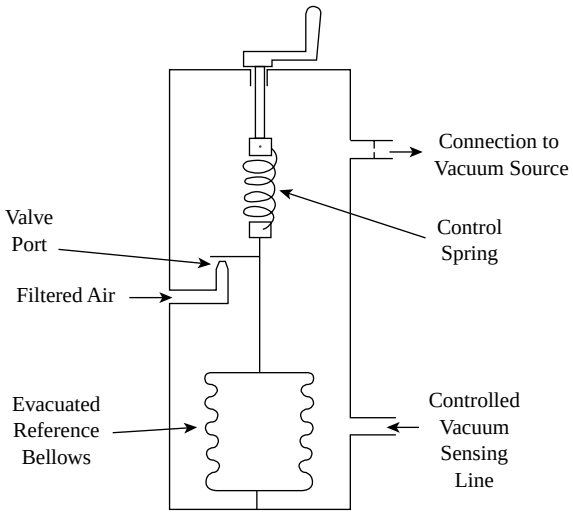

FIG. 5.14k
Aneroid manostat.

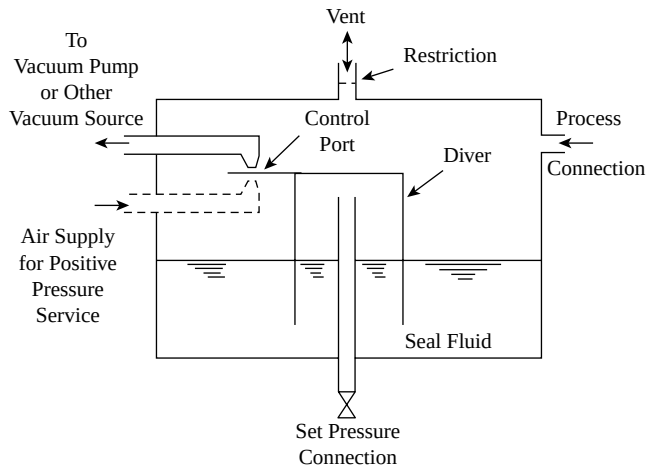

FIG. 5.14l
Cartesian diver.

a way to determine if the current vacuum is at the desired set point condition. Three types of vacuum controllers are briefly discussed.

Aneroid Manostats

The aneroid manostat illustrated in Figure 5.14k is a self-contained bellows-type vacuum controller. The bellows are fully evacuated to provide a zero absolute pressure reference unaffected by barometric changes. The spring is temperature-compensated, and its tension is adjustable over the entire range of the controller, which is 1 to 60 in.Hg (3.4 to 200 kPa) absolute pressure. The sensitivity of setting is about 0.5 mmHg (0.07 kPa) and the inaccuracy of control is 2% of set pressure.

The aneroid manostat works at above and below atmospheric process conditions. When a below-atmospheric pressure is to be maintained, connections are made both to the vacuum source (usually a vacuum pump) and to the controlled system. The spring tension is set for the desired set pressure, and expansion or contraction of the bellows moves the valve port to control the airflow through the manostat. The manostat is primarily designed for dead-ended service, but it will handle small flows. For example, at a setting of 300 mmHg (2000 kPa) without any restrictions in the vacuum source line, it will pass 0.2 ft^3 (6 l) of air each minute. When an above-atmospheric pressure is to be controlled, the filtered air supply is not atmospheric any longer, but connected to a pressurized supply, and the vacuum source connection is left open to vent the unit.

Cartesian Diver Regulators

Cartesian divers are self-contained pressure, or vacuum, regulators operating on principles somewhat similar to those of the aneroid manostats. As shown in Figure 5.14l, the set pressure for this controller is sealed in under the diver. The process pressure acts on the outside of the diver causing it to sink or rise as pressure varies. If the unit is to control a vacuum process, a vacuum pump (or other vacuum source) is connected to the unit. A process pressure increase causes the diver to sink, opening the control port and connecting the vacuum pump to the process to lower its pressure. If the unit is installed for positive pressure control, a pressure source, not a vacuum source, is connected to the control port, which is closed by an increase in process pressure and opened by its reduction.

This device is capable of maintaining process pressures between 1 mmHg absolute to 100 psia (0.13 to 690 kPa) to an approximate inaccuracy of 0.1% of set point. The unit is available in both glass and metal, requires no external power source, and is simple to operate or to change its set pressure. Because of its limited flow capacity, it can control small volume systems only.

Analog Electronic Controllers

Continuous reading, relay action, analog gauge, electronic controllers are also available and used for vacuum control. These instruments provide dependable control with simplicity and economy. The desired set point is established by positioning the gauge need set point indicator at the desired value. The system's integrated vacuum gauge is stable and rugged and provides reliable measurements over the 1 to 50 torr range commonly provided. If the pressure-indicating needle passes the set point, the relay is activated. The relay action is typically available as 115 V 5A SPDT @VAC normally open or normally closed contacts. The relay automatically drops out when set point vacuum value returns.

Mass Flow Controllers

Many vacuum related processes require vacuum control, while process gases are admitted on a continuous basis. A (PID) process control loop for such circumstances is possible with a mass flow controller. Vacuum process mass flow controllers

© 2003 by Béla Lipták

usually detect the temperature change as the gas passes through a small, typically 3-in. flow chamber. The temperature is monitored with a TC gauge, and chambers can have stream splitter bypass elements to allow adaptation to different process gas flow ranges. The differential temperature measurement signal becomes the input to an electronic PID controller and the resulting control signal is sent to the final control element.

There are several final control element choices for mass flow controllers dedicated to vacuum process gas control. The solenoid proportional valve is one widely used cost effective control value that is coupled to a mass flow controller. This final control element uses a solenoid coil, a spring-supported armature, plug, and orifice. The unit can be configured with an elastomer sealed valve. The assembly also usually contains both external seals, which isolate the gas flow path from atmosphere, and an internal seal for the valve seat. All metal versions of the value are available when the process gas is also corrosive.

Other control value options include a pieazoelectric control valve and moving coil actuator valve. In the former, a stack of piezoelectric elements drives the value. This valve type has a fast response time with high valve action force. The counter valve action can be spring or diaphragm driven. Piezo valves are all constructed from metal. For the latter valve option, the actuator is a moving coil that surrounds a permanent magnet. As current passes through the coil, it is displaced. The displacement is transferred by a pivot arm and diaphragm action to the wetted volume on the other side of the diaphragm. This type of valve action produces a low valve sweep volume. This all-metal construction valve is good for contamination-sensitive applications.

References

1. Welch, J., "Capacitance Manometers," *Measurements and Control*, December 1989.
2. Melling, R.J., "Ionization Vacuum Gauge Measures Absolute Pressure," *Instruments and Control Systems*, September 1964.

Bibliography

Alvesteffer, W.J., Jacobs D.C., and Baker, D.H., "Miniaturized Thin Film Thermal Vacuum Sensor," *Journal of Vacuum Science and Technology*, Vol. 13(6), 1995, p. 2980.

von Beckerath, A., Eberlein, A., Julien, H., Kerstein, P., and Kreutzer, J., *WIKA Handbook on Pressure and Temperature Measurement*, U.S. ed., Lawrenceville, GA: Wika Instrument Corp., 1998.

Brombacher, W.G., "40 Years of Pressure Measurement," *Instruments and Control Systems*, September 1967.

Comber, J. and Hockman, P., "Pressure Monitoring: What's Happening?" *Instruments and Control Systems*, April 1980.

Delajoud, P. and Girard, M. "The Need for Evaolution in Standards and Calibration to Improve Process Measurement and Control of Low Mass Flow," 1996 National Conference of Standards and Laboratories Workshop and Symposium, Monterey, CA, 1996.

Dyer, S.A., *Wiley Survey of Instrumentation and Measurement*, New York: John Wiley & Sons, 2001.

Elliott, T.C., "Temperature, Pressure, Level, Flow: Key Measurements in Power and Process," *Power*, September 1975.

Hall, J., "Monitoring Pressure with Newer Technologies," *Instruments and Control Systems*, April 1979.

Harvey, G.F., "ISA Transducer Compendium," Instrumentation, Systems, and Automation Society, Research Triangle Park, NC, 1969.

Hughes, T.A., "Pressure Measurement," EMC series, downloadable PDF, Instrumentation, Systems, and Automation Society, Research Triangle Park, NC, 2002.

Instrumentation, Systems, and Automation Society, "Industrial Measurement Series: Pressure" (video VHS, PAL & NTSC), Research Triangle Park, NC, 2002.

Instrumentation, Systems, and Automation Society, "Pressure: Indicators and Transmitters," CD-ROM, Research Triangle Park, NC, 2002.

Johnson, D., "Pressure Sensing: It's Everywhere," *Control Engineering*, April 2001.

Marrano, S.J., "How to Choose and Apply Pressure Transmitters," *Control*, March 2000.

O'Hanlon, J.F., *User's Guide to Vacuum Technology*, 2nd ed., New York: John Wiley & Sons, 1989.

Roper, D.L. and Ryans, J.L., "Select the Right Vacuum Gauge," *Chemical Engineering*, March 1989.

Sullivan, J.J., *Journal of Vacuum Science and Technology*, Vol. 3, 1985, p. 1721.

Sullivan, J.J. and Uttaro, F.L., "Performance and Calibration of Capacitance Diaphragm Gauges," Measurement Science Conference, Irvine, CA, 1985.

Tompkins, H.G., *Vacuum Technology: A Beginning*, New York: American Vacuum Society, AVS Education Committee Book Series, July 2002.

© 2003 by Béla Lipták

Density Measurement

6

6.1
DENSITY: APPLICATIONS AND SELECTION 809

Introduction 809
Orientation among Densitometers 809
Units and Definitions 809
  Reference Temperatures 809
  Industry-Specific Specific Gravity Units 809
Density Detectors for Liquids 811
  Selection of the Densitometer 812
  Indirect Sensors 813
Gas Density Detectors 813
  Composition Measurement 813
Mass Flow Measurement 813
  Super-Compressibility Detection 814
  Selection 814
    Composition Detectors 814
    Direct Density Measurement 814
Conclusions 814
Bibliography 815

6.2
DISPLACEMENT- AND FLOAT-TYPE DENSITOMETERS 816

Introduction 817
Displacer-Type Densitometers 817
  The Torque-Tube-Type Displacer 817
    Sizing the Displacer Float 818
    Features and Limitations 818
  Chain-Balanced Densitometer 819
    Transmitters 819
  Electromagnetic Suspension Densitometer 820
    Design Features 821
  Angular Position Densitometer 821
    Performance 822
Conclusions 822
Bibliography 822

6.3
HYDROMETERS 823

Introduction 823
Design Variations 823
  In-Line Designs 824
  Industrial Designs 824
  Transmitters 824
Conclusions 825
Bibliography 825

6.4
HYDROSTATIC DENSITOMETERS 826

Introduction 827
Sizing the Hydrostatic Head Tank 827
Using Bubblers 827
Using d/p Cells 828
  Elevation Considerations 828
  Design Example 829
  Narrow Spans 829
  Temperature Compensation 829
Conclusions 829
Bibliography 830

6.5
OSCILLATING CORIOLIS DENSITOMETER (GAS, LIQUID, AND SLURRY SERVICES) 831

Introduction 832
The Sensor 832

© 2003 by Béla Lipták

Temperature Correction 832
Theory of Operation 833
The Calibration Constant 833
Electronics 833
Output Options 834
Applications 834
Developments and Trends 835
Bibliography 835

6.6 RADIATION DENSITOMETERS 836

Introduction 837
Radioisotopes 837
The Radiation Densitometer 838
Radiation Source 838
Radiation Detectors 838
Geiger Tubes 839
Ionization Cells 839
Scintillation Detectors 839
Temperature Control and Calibration 839
Amplifier and Power Supply 839
Span and Error 839
Beta Radiation Densitometers 839
X-Ray Densitometers 839
Limitations 840
Conclusions 840
Bibliography 840

6.7 ULTRASONIC SLUDGE AND SLURRY DENSITOMETERS 841

Introduction 841
Ultrasonic Sludge Densitometers 841
Calibration 842
Sonic Densitometers 843
Bibliography 843

6.8 LIQUID/SLURRY/GAS DENSITY—VIBRATING DENSITOMETERS 844

Introduction 845
Basic Theory 845
Real Life Behavior 846
Effects of Temperature, Pressure, and Flow 846
Effects of Sample Properties 847
Vibrating U-Tube 847
Vibrating U-Tube with Period of Oscillation Measurement 847
Vibrating U-Tube with Vibration Amplitude Measurement 848
Vibrating Cylinder or Straight Tube 848
Vibrating Cylinder 848
Vibrating Straight Tube 849
Vibrating Twin-Tube 850
Vibrating Fork 850
Multivariable Transducer for Density and Sound Velocity 851
References 851
Bibliography 851

6.9 WEIGHT-BASED AND MISCELLANEOUS DENSITOMETERS 852

Introduction 852
Weight-Based Densitometers 852
Weighed-Bulb-Type Densitometer 852
Design Features 853
U-Tube Density Gauge 853
Applications 854
Temperature Compensation 854
Straight-Tube Density Transmitter 854
Direct Density Controller 855
Ball-Type Densitometer 855
Capacitance Densitometers 856
Fuel Weight Measurement 856
Bibliography 856

6.10 GAS DENSITOMETERS 857

Introduction 858
Theory of Operation 858
Displacement-Type Densitometers 858
Continuous Units for Pressurized Operation 859
Electromagnetic Suspension-Type Units 860
Centrifugal Gas Density Sensors 860
Fluid Dynamic Densitometer 861
Gas Column Balance Sensors 861
Thermal Conductivity Density Gauges 862
Viscous Drag-Type Density Sensors 863
Ultrasonic Density Detection 863
Conclusions 863
Bibliography 864

© 2003 by Béla Lipták

6.1 Density: Applications and Selection

C. H. HOEPPNER (1982) **B. G. LIPTÁK** (1969, 1995), **REVIEWED BY J. A. LIVINGSTON** (1995)
J. E. JAMISON, S. EDVI (2003)

INTRODUCTION

By measuring the density of a process stream, one can determine its concentration, composition, or in the case of fuels, one can identify its calorific value. Density measurement is also necessary to convert volumetric flow into mass flow (Section 2.12).

When measuring the mass flow of gases, direct density measurement is simpler and more accurate than the indirect calculation of density, which has to consider pressure, temperature, super compressibility, and humidity.

One method of measuring the density of solids is to weigh a fixed volume. The various aspects of weighing are discussed in Chapter 7.

ORIENTATION AMONG DENSITOMETERS

The features and capabilities of the various densitometers that are discussed in this chapter are summarized in Orientation Table 6.1a. When considering the selection of a density sensor for a particular application, one would consider both the nature of the process fluid (slurry, viscous, or clean) and the operating pressure and temperature conditions. The table also provides information on the density spans and inaccuracies of the various densitometer designs.

For liquid densitometers, the narrowest spans (0.005 SG [specific gravity] based on water) can be provided by the displacement-type units. With such a span, an inaccuracy of 1% corresponds to 0.00005 SG. In the case of gas densitometers, the electromagnetic suspension-type unit provides the narrowest span (0.01 SG based on air), and the lowest error it can provide is 0.0001 SG.

Another important factor in the selection process is the cost of the instrument. Pricing information and data on the suppliers of the various densitometer designs are given at the beginning of each section of this chapter, in the feature summaries.

UNITS AND DEFINITIONS

Density is defined as the quantity of matter per unit volume. The most common unit is kilograms per cubic meter but the units of grams per cubic centimeter, pounds per cubic foot, or pounds per gallon are also used. To convert from one set of density units to another, refer to Table 6.1b. For converting from a variety of density units into the SI unit of kg/m^3, refer to Table 6.1c.

Relative density, which in our everyday language is called specific gravity, is the ratio between the density of a process material to that of water or air at specified standard conditions. Being a ratio, specific gravity has no units associated with it. For liquids, SG = 1.0 corresponds to 1 g/cm^3 or, in the SI system of units, it corresponds to 1000 kg/m^3.

Reference Temperatures

Both density and specific gravity characterize the same physical property of the process media, and they are meaningful only if defined at stated temperature levels. In the case of specific gravity, the temperatures might be different for the process and the reference fluid, which is acceptable, but must be clearly stated. For example, a specific gravity table might list a process fluid as having a specific gravity of $0.87^{80/40}$. This means that this liquid at 80°F (27°C) will have a density of 0.87 times that of water at 40°F (4.4°C).

For gases, the specific gravity is based on air at standard conditions. This means that both the process vapors and the reference air density are measured at 60°F (16°C) and at atmospheric pressures. For ideal gases, the ratio of molecular weights is equal to their specific gravity.

Industry-Specific Specific Gravity Units

A variety of specific gravity scales have evolved in the various industries. They are defined below so that one might be able to convert from one set of units to another.

For petroleum products in the United States, the American Petroleum Institute (API) introduced in 1921 the unit of API degrees:

$$°\text{API} = \frac{141.5}{\text{SG @ } 60°\text{F}} - 131.5 \qquad \textbf{6.1(1)}$$

© 2003 by Béla Lipták

TABLE 6.1a
Orientation Table for Density Sensors

LIQUID Density Sensor Design	*Applicable to*			*Minimum Span Based on Water SG = 1.0*	*Inaccuracy in % of Span or SG Units*	*Design Pressure and Temperature Limitations*		*Temperature Compensation Available*	*Direct Local Indicator*	*Transmitter*
	Clean Process Streams	*Slurry Service*	*Viscous or Polymer Streams*			*PSIG/°F*	*Bars/°C*			
Angular Position Type	✓			0.1	0.5%	1000/500	69/260	N.S.		✓
Ball Type	✓			Digital	0.01 SG	600/160	41/71	N.S.	✓	✓
Capacitance Type	✓	✓	✓	0.1	1%	500/160	34.5/71	✓		✓
Displacement Type Buoyant Force Displacer	✓			0.005	1%	1500/850	130/472	N.S.		✓
Chain Balance Float	✓			0.005	1–3%	500/450	34/232	✓	✓	✓
Electromagnetic Suspension	✓			0.01	0.5–1%	200/350	14/177	✓		✓
Hydrometers	✓			0.05	1%	100/200	7/93	✓	✓	✓
Hydrostatic Head Type	✓	✓	✓	0.05	0.2–1%	5000/350	345/177	N.S.	✓	✓
Oscillating Coriolis	✓	✓	✓	0.1	0.02 SG or better	5000/800	345/426	✓		✓
Radiation Type	✓	✓	✓	0.05	1%	Unlimited	Unlimited	✓		✓
Sonic/Ultrasonic	✓	✓	✓	0.2	1–5%	1000/390	69/199	✓		✓
Twin Tube	✓	✓		Digital	0.0001	1440/356	100/180	✓	✓	✓
Vibrating Fork Type	✓	L	L	0.02	0.001 SG	3000/392	207/200	✓		✓
Vibrating Plate Type (also for gases) (currently not manufactured)	✓	L	L	0.1	0.2%	1440/200	100/95			✓
Vibrating Spool Type (also for gases)	✓	L	L	0.3	0.001 SG	725/300	50/149	✓		✓
Vibrating U-Tube Type	✓			0.05	0.00005-0.005 SG	2900/500	200/260	✓		✓
Weight of Fixed Volume Type	✓	✓	✓	0.05	1%	2400/500	165/260	✓	✓	✓

GAS Density Sensor Design	*Minimum Span*		*Inaccuracy in % of Span or in SG Units*	*Design Pressure and Temperature Limitations*		*Manually Operated Indicator*	*Continuous Indicator*	*Transmitter*
	lbm/ft³	*kg/m³*		*PSIG/°F*	*Bars/°C*			
Sensors Operating at Actual Flowing Conditions Centrifugal Type	1.0	16	0.1–0.5%	2000/300	138/49		✓	✓
Displacement Type	1.0	16	0.25%	1500/200	103/93	✓	✓	✓
Fluid Dynamic Type	0.5	8	2%	50/450	3.5/232	✓	✓	✓
Specific Gravity Detectors Operating at Near-Ambient Conditions	Minimum Span Based on Air SG = 1.0							
Electromagnetic Suspension Type	0.01 SG		0.0001 SG	ATM/120	ATM/49			✓
Gas Column Balance Type	0.1 SG		0.001 SG	20/140	1.4/60		✓	✓
Manual Displacement Type Elements	0.1 SG		0.002 SG	ATM/120	ATM/49		✓	
Thermal Type	0.5 SG		0.01 SG	ATM/120	ATM/49	✓		✓
Viscous Drag Type	0.1 SG		0.001–0.002 SG	ATM/120	ATM/49		✓	✓

N.S.: Nonstandard
L: Limited

© 2003 by Béla Lipták

TABLE 6.1b
Density Conversions

1 lb/cu. in. = 1728 lb/cu. ft. = 0.864 tons°/cu. ft. = 23.3 tons/cu. yd = 231 lb/gal	1 lb/gal = .00433 lb/cu. in. = 7.48 lb/cu. ft. = .00374 tons/cu. ft. = .1010 tons/cu. yd
1 lb/cu. ft. = .000579 lb/cu. in. = .000500 tons/cu. ft. = .0135 tons/cu. yd = .1337 lb/gal	1 ton/cu. ft. = 1.157 lb/cu. in. = 2000 lb/cu. ft. = 27 tons/cu. yd = 267 lb/gal
1 ton/cu. yd = .0429 lb/cu. in. = 74.1 lb/cu. ft. = .0370 tons/cu. ft. = 9.90 lb/gal	
°Tons are short = 2000 lb.	

TABLE 6.1c
Conversion to Kilograms per Cubic Meter

To convert to kg/m³	*Multiply by*
grain (lb avoirdupois/7000)/gal (U.S. liquid)	1.711 806 E − 02
g/cm³	1.000 000 E + 03
oz (avoirdupois)/gal (U.K. liquid)	6.236 021 E + 00
oz (avoirdupois)/gal (U.S. liquid)	7.489 152 E + 00
oz (avoirdupois)/in³	1.729 994 E + 03
lb/ft³	1.601 846 E + 01
lb/in³	2.767 990 E + 04
lb/gal (U.K. liquid)	9.977 633 E + 01
lb/gal (U.S. liquid)	1.198 264 E + 02
lb/yd³	5.932 764 E − 01
slug/ft³	5.153 788 E + 02
ton (long)/yd³	1.328 939 E + 03
ton (short)/yd³	1.186 553 E + 03

The brewing and sugar industries use Balling degrees to express the percentage of "worth" or weight percentage of dissolved solids at 60°F (17.5°C):

$$°\text{Ba} = \%\text{ by weight of dissolved solids} \qquad \textbf{6.1(2)}$$

The tanning and tanning-extract industry expresses specific gravity in Barkometer degrees. Each degree is 0.001 SG above or below SG = 1.0. Therefore, the Barkometer degrees can be negative or positive (+10°Bk = 1.01 SG).

$$°\text{Bk} = (\text{SG} - 1.0)(1000) \qquad \textbf{6.1(3)}$$

The density of acids and of light and heavy syrups is expressed in Baumé degrees. This scale was introduced by Antoine Baumé in 1768 and consists of two scales, one for "heavy" (above SG = 1), the other for "light" (below SG = 1) liquids at 60°F (17.5°C):

$$°\text{Be (light)} = (140/\text{SG at } 60°\text{F}) - 130$$
$$°\text{Be (heavy)} = 145 - (145/\text{SG at } 60°\text{F}) \qquad \textbf{6.1(4)}$$

The sugar industry also uses the Brix degree, which represents the weight percentage of pure sucrose in a 60°F (17.5°C) solution.

$$°\text{Br} = \text{weight\% of sucrose} \qquad \textbf{6.1(5)}$$

The dairy industry uses the Quevenne degrees in testing the fat content of milk. Each degree corresponds to 0.001 SG in excess of SG = 1.0, so 40°Q = 1.04 SG.

$$°\text{Q} = (\text{SG} - 1.0)(1{,}000) \qquad \textbf{6.1(6)}$$

The alcohol industry uses Sikes, Richter, or Tralles scales on its alcoholmeters. They each read the volumetric percentage of ethyl alcohol in water.

$$°\text{S, }°\text{R, }°\text{T} = \text{volume\% of ethyl alcohol} \qquad \textbf{6.1(7)}$$

The alcohol industry also uses the unit of proof, which is °S, °R, or °T multiplied by 2.

$$\text{proof} = 2(\text{volume\% of ethyl alcohol}) \qquad \textbf{6.1(8)}$$

The sugar, tanning, acid, and other industries working with liquids that are heavier than water all use Twaddell degrees. Twaddell divides the SG range between SG = 1.0 and 2.0 into 200 equal parts, each representing 0.005 SG.

$$°\text{Tw} = 200(\text{SG} - 1.0) \qquad \textbf{6.1(9)}$$

If one wants to transfer density data from one scale to another, refer to the density conversion table (Table 6.1d).

DENSITY DETECTORS FOR LIQUIDS

Either the density or the specific gravity of process fluids can be measured. Specific gravity is the ratio of the density of the measured substance and that of the density of water. The effects of pressure upon density measurement can generally be disregarded, because the compressibility of most liquids is slight.

In this chapter, a number of liquid density gauges are described. When a selection is to be made for a particular installation, several considerations should influence the decision.

© 2003 by Béla Lipták

TABLE 6.1d
*Density Conversion Table**

SG	Pounds per Gallon	°Be	°API	% Proof	Vol. % of Alcohol	°Be	°Bk	Degrees Brix or Balling	°Tw
0.6087	5.066	100	100.96						
0.6364	5.296	90	90.86						
0.6667	5.549	80	80.75						
0.7000	5.827	70	70.64						
0.7368	6.134	60	60.54					LIQUIDS	
0.7778	6.475	50	50.43					LIGHTER	
0.7955	6.623	46	46.39	199.36	99.68			THAN WATER	
0.8235	6.857	40	40.32	186.00	93.00				
0.8750	7.286	30	30.21	151.72	75.86				
0.9333	7.772	20	20.11	101.00	50.50				
1.0000	8.328	10	10.00	0.00	0.00				
1.000	8.328					0	0	0	0
1.007	8.385					1	7	1.75	1.4
1.036	8.625					5	36	9.00	7.2
1.074	8.945					10	74	18.00	14.8
1.115	9.289					15	115	27.00	23.0
1.160	9.660					20		36.20	32.0
1.208	10.063					25		45.40	41.6
1.261	10.501					30		55.00	52.2
1.318	10.978		LIQUIDS			35		64.66	63.6
1.381	11.501		HEAVIER			40		74.72	76.2
1.450	12.076		THAN WATER			45		85.00	90.0
1.526	12.711					50		95.84	105.2
1.543	12.849					51		98.14	108.6
1.611	13.417					55			122.2
1.706	14.207					60			141.2
1.813	15.095					65			162.6
1.933	16.101					70			186.5
2.000	16.656					72.5			200.0

*Values from Bureau of Standards Circular C-410.

Selection of the Densitometer

If a transmitter is needed, the most economical selections are the hydrostatic head and the displacement-type sensors. Of these two, the hydrometers represent the least expensive choice, if only local indication is required.

The inaccuracy of density detectors is usually expressed as percent full span; the narrower the range of the sensor, the higher will be the precision of the measurement. Where operating temperatures vary, it is necessary to compensate the densitometer readings for these changes. All density detectors can be furnished with means for temperature compensation. As can be seen in Table 6.1a, this feature is standard for a number of the densitometer designs.

Most density gauges are suitable only for use on process fluids that are clean and nonviscous. When that is the case, the densitometer is usually selected on the basis of the allowable error and economics. If the process fluid is viscous or of the slurry type, then the radiation, Coriolis, ultrasonic, vibrating, hydrostatic head, and U- or straight-tube type sensors can be considered.

Of these types, the U- or straight-tube gauges are limited in their pressure and temperature ratings and can handle only moderately viscous or slurry-type streams.

The main limitation of the hydrostatic head-type measurement is in detecting narrow spans of density, because the corresponding standpipe height required becomes excessive. In addition, when the process fluid is a heavy slurry or is very viscous, the low-pressure side of the differential pressure (d/p) detector is likely to be plugged, if piped into the process without protection. If the required protection is provided by purging or by using pressure repeaters, the densitometer cannot be used on high pressure services, because the operating pressure ratings of the pressure repeaters or by the available supply pressure of the purge media is limited.

© 2003 by Béla Lipták

The limitations and capabilities of the various vibrating densitometers include:

1. The oscillating Coriolis-type design is not suited for measuring the density of gas or vapor mixtures.
2. The vibrating tube and the vibrating cylinder types are not suited for heavy slurry services because of plugging.
3. The vibrating plate design is not suitable for slurry services, if the slurry is abrasive.

The best, but not the least, expensive densitometer choice for viscous and slurry-type applications is the radiation-type density detector.

Indirect Sensors

Density can also be detected indirectly through the measurement of some process property that is related to density.

The detection of boiling point elevation is one of the common methods of indirect density gauging. In this design, resistance elements are used to compare the boiling temperature of the process sample with the boiling temperature of water at the same pressure. In this case, the scale for the boiling temperature difference of the particular solution can be calibrated in terms of density. This method of density detection is also used to determine the end point in evaporation type processes.

GAS DENSITY DETECTORS

While in liquid density measurement, the process pressure has little influence, and the effect of pressure on gas density cannot be disregarded. Because gases are compressible materials, the same detector might not be capable of detecting both specific gravity (or molecular weight) and density at operating conditions.

Composition Measurement

When the purpose of measurement is to determine the composition of a gas stream, the sample gas gravity is detected at ambient conditions, disregarding the actual operating pressures and temperatures. The scales of these gauges are calibrated either in specific gravity units based on air or in molecular weight units. The two scales are interchangeable because:

$$SG = \frac{M_{wg}}{M_{wa}} \qquad \textbf{6.1(10)}$$

This can be proved by considering that:

$$SG = \frac{\rho_g}{\rho_a} = \frac{P_g Z_a R_a T_a}{P_a Z_g R_g T_g} \qquad \textbf{6.1(11)}$$

But the pressures and temperatures are the same,

$$SG = \frac{Z_a R_a}{Z_g R_g} \qquad \textbf{6.1(12)}$$

and,

$$\frac{R_a}{R_g} = \frac{M_{wg}}{M_{wa}} \qquad \textbf{6.1(13)}$$

therefore,

$$SG = \frac{Z_a M_{wg}}{Z_g M_{wa}} \qquad \textbf{6.1(14)}$$

For gases (substantially superheated vapors), the ideal gas equations are quite accurate at ambient conditions, and, therefore, the compressibility factors can be considered as unity.

$$SG = \frac{M_{wg}}{M_{wa}} \qquad \textbf{6.1(15)}$$

In Equations 6.1(10) to 6.1(15) the letters used are defined as follows:

SG = specific gravity based on air = 1.0

ρ_g, ρ_a = gas and air densities, respectively (lbm/ft^3)

P_g, P_a = gas and air pressures, respectively (lbf/in.^{2} abs. or bars absolute)

Z_g, Z_a = gas and air compressibility factor

R_g, R_a = gas and air engineering gas constant (ft-lbf/lbm °R or cal/g °K)

T_g, T_a = gas and air temperature (°R or °K)

M_{wg}, M_{wa} = gas and air molecular weight

MASS FLOW MEASUREMENT

When the purpose of the density measurement is to determine the mass flow of a process gas stream, the density must be detected under actual operating conditions. The relationship between gas properties and density is as follows (using English units):

$$\rho_g = \frac{M_{wg} P_g}{10.73\, T_g Z_g} \qquad \textbf{6.1(16)}$$

The volumetric flow rate at standard conditions can be calculated by dividing the mass flow rate with the specific gravity. If, for example, the pressure drop across an orifice

© 2003 by Béla Lipták

plate and the gas density at operating conditions are both measured, then the mass and volumetric flow rates can both be calculated by using the following equations:

$$Q = \frac{C_2\sqrt{\Delta P \rho_g}}{SG} \qquad \textbf{6.1(17)}$$

$$W = C_1\sqrt{\Delta P \rho_g} \qquad \textbf{6.1(18)}$$

where

W = mass flow rate (lbm/hr)
ΔP = differential pressure (lbf/in.^{2})
C_1, C_2 = constants containing appropriate orifice and other factors
ρ_g = gas density (lbm/ft^3)
Q = volumetric flow rate (ft^3/hr)

Super-Compressibility Detection

Sensors that are capable of measuring the vapor's density at operating conditions can also be used to determine the compressibility factor of the vapor. Super-compressibility is a measure of the *deviation* between ideal and actual gas behavior. It is defined as the *ratio* between the actual specific weight and the theoretical one, based on the perfect gas law. If the gas pressure, temperature, specific gravity, and flowing density are measured, then the super-compressibility factor is calculated as follows:

$$Z = \frac{P \times SG}{\rho \cdot T \cdot R_{air}} \qquad \textbf{6.1(19)}$$

where

Z = supercompressibility factor (dimensionless)
P = operation pressure (lbf/in.^{2})
SG = specific gravity (dimensionless)
ρ = flowing density (lbm/ft^3)
T = absolute temperature (°R)
R_{air} = gas constant for air 53.3 (ft-lbf/lbm °R)

Selection

When selecting gas and vapor density gauges, the application engineer should first consider the purpose of making the measurement. If it is for composition or concentration gauging, then the information desired is specific gravity or molecular weight, which can be obtained by measuring the sample under near-ambient conditions.

If the purpose of the measurement is direct density detection under operating conditions for the purpose of mass flow rate determination, then the instruments described in Figures 6.10c, 6.10e, and 6.10f should be evaluated.

The important difference between these two groups is that in case of mass flow rate determination, there is no need for separate pressure, temperature, super-compressibility, or humidity measurements. However, when gas composition is the purpose of the installation, these variables must be taken into consideration and their effects compensated for.

Composition Detectors In the category of gas-specific gravity sensors (composition detectors), economics would favor the displacement-type, manually operated indicators (Figure 6.10a). If continuous indication or remote signal transmission is required, the gas column balance and the viscous drag type instruments will be the most economical selections (Figures 6.10g and 6.10i).

When the overriding consideration is high sensitivity and accuracy, the electromagnetic suspension-type sensors will satisfy that requirement (Figure 6.10d).

If the process gas samples are corrosive and therefore the sensing elements should not come in contact with the process stream, the thermal gauges can be considered (Figure 6.10h). All of these units operate at near-ambient conditions. Therefore, in case of nonambient samples, it is necessary to regulate their pressures and temperatures. In addition, it is necessary to establish the moisture content of both the sample and the reference gas, which is usually air.

Direct Density Measurement If the purpose of measurement is direct density detection under operating conditions, the most economical choice is the manually operated displacement indicator (Figure 6.10b). Continuous indication or remote readout can be provided by both the displacement and the centrifugal-type designs (Figures 6.10c and 6.10e). It can also be provided by some of the vibrating densitometers, which are discussed in Section 6.8.

These units are accurate and capable of withstanding high operating pressures and temperatures. An important consideration is to minimize the pressure and/or temperature loss in the sampling system so as to maintain the gas sample under operating conditions. This is achieved by close-coupling the instruments to the process and by providing good thermal insulation for the sample lines. Another important consideration is to protect all restrictions and moving parts from deposits by filtering the sample.

CONCLUSIONS

Some of the mechanical and thermal gas density sensors described here are not widely used anymore. The general trend seems to be to replace such indirect composition (or energy content) measurements as ones based on the detection of specific gravity with direct composition analyzers such as chromatographs. In case of direct density measurement, the various vibration type density sensors, discussed in Section 6.8, seem to be the most popular choices.

© 2003 by Béla Lipták

Bibliography

Agar, J., "Vibrating Spool Densitometer," *Instruments and Control Systems*, January 1970.

Babb, M., "New Coriolis Meter Cuts Pressure Drop in Half," *Control Engineering*, October 1991.

Benabdelkarim, M. and Galiana, C., "Non-Radioactive Densitometer for Continuous Monitoring of Cement Mixing Process," in *Proceedings of the First International Conference on Health, Safety, and Environment in Oil and Gas Exploration & Production*, Part 1of 2, Richardson, TX: Society of Petroleum Engineers, November 1991.

Berkowitz, P.N. and Hardin, M.B., "Mass Flow and Density Sensor Tightens Control of Alumina Extraction," *Instruments and Control Systems*, December 1991.

Berto, F.J., "Hydrostatic Tank Gages Accurately Measure Mass, Volume, and Level," *Oil and Gas Journal*, May 14, 1990.

Blickley, G.J., "Mass Flow Measurement Aided by Coriolis Methods," *Control Engineering*, April 1991.

Blickley, G.J., "Tank Gauging Transmitter Performs More Functions," *Control Engineering*, August 1991.

Blumenthal, J., "Direct Mass Flow Rate and/or Density Monitoring using Coriolis/Gyroscopic Sensor Base," in *TAPPI Proceedings: 1985 Papermakers Conference*, Seattle, WA, 1985.

Blumenthal, J., "Simultaneous Direct Mass Flow and Density Monitoring," Annual Meeting: Technical Section, Canadian Pulp and Paper Association, 72nd Annual Meeting CPPA, Montreal, 1986.

Boyes, W., "Practical Uses of Non-Contacting Density Instrumentation," in *Advances in Instrumentation and Control: ISA/93 Proceedings*, Part 2, Research Triangle Park, NC: Instrumentation, Systems, and Automation Society, 1993.

Bugher, G., "Coriolis Flowmeters," *Measurements and Control*, September 1990.

Cameron, D., "An Instrument for Measurement of Liquid Density," *Industrial Electronics*, March 1967.

Capano, D., "The Ways and Means of Density," *InTech*, November 2000.

Cook, H.L., "Slurry Measurement and Control," *ISA Journal*, June 1964.

"Density and Specific Gravity," *Measurements and Control*, October 1991.

Frost & Sullivan, Inc., "On Stream Process Analyzer Market," Report No. 669, London, August 1979.

Gillum, D., *Industrial Pressure, Level, and Density Measurement*, Research Triangle Park, NC: ISA Press, 1995.

Greene, G. Jr., "Measure and Sell Gas by the Pound," *Pipeline Industry*, January 1967.

Hall, R., "Measuring Mass Flow and Density with Coriolis Meters," *InTech*, Vol. 37, No. 4, April 1990.

Holzschuler, P., "Hazard Free Analysis," *Processing*, October 1989.

Hough-Grassby, A.W., "The Evaluation of Process Analyzers," in *Advances in Instrumentation*, Vol. 34, Research Triangle Park, NC: Instrumentation, Systems, and Automation Society, 1979.

Jutila, J.M., "On-Stream Analyzers," *InTech*, October 1980.

Kalotay, P., "Density and Viscosity Monitoring Systems Using Coriolis Flow Meters," *ISA Transactions*, Vol. 38 No. 4, 1999.

Kotnik, P., et al., "Accurate Fluid Density Measurement Using Oscillating Type Density Meters Under Rapid Temperature Variations," ACHEMA, Frankfurt, 2000.

Lipták, B.G., "Instruments to Measure Slurries," *Chemical Engineering*, February 1967.

Livingston, A.J., "Density Measurement, Nuclear Gauge Measurement of Density," *Measurements and Control*, December 1990.

Magaris, P., "On-Line Density Measurements Is Fast and Accurate," *Control Engineering*, June 1981.

November, M.H., "Electronic Density Measuring Systems," Instrumentation, Systems, and Automation Society, ASI 73207, 1973, pp. 19–24.

November, M.H., "Measuring Fluid Density and Specific Weight," *Instrumentation Insight*, Vol. 2, No. 3, August 1975.

Plache, K.D., "Coriolis/Gyroscopic Flow Meter," ASME Publication 77-WA-M4, New York.

Puzniak, T.J., "Analyzers: The Key to Advanced Control," in *Proceedings of the 1980 Instrumentation, Systems, and Automation Society Symposium on Analysis*, Research Triangle Park, NC: Instrumentation, Systems, and Automation Society, 1980.

Schietinger, M., "Mass Flow vs. Volumetric Flow," *Measurements and Control*, September 1990.

Smith, B.W., "Radioisotope Gauge in the Mining Industry," *The Canadian Mining and Metallurgical Bulletin*, January 1964.

"Standard Practice for Calibration of Transmission Densitometers," *ASTM Standard*, 1998.

Torrance, J.W., "LPG Mass Flow Using a Densitometer of Resonating Twin Tube Design," Paper #76-852, Instrumentation, Systems, and Automation Society Conference, 1976.

Valentine, J. and Duffill, R., "Coriolis Meters Used To Measure Density-Related Physical Properties," *Annual ISA Analysis Division Symposium-Proceedings*, Vol. 33, 2000.

Waterbury, R.C., "Transmitter Keys Hydrostatic Gauging," *InTech*, July 1990.

Wenzel, S.W., Costello, B.J., and White, R.M., "Liquid Viscosity and Density Measurement with Flexural-Plate-Wave Sensors," Integrated Monitoring, Diagnostics, and Failure Prevention Proceedings: Joint Conference, Mobile, AL, April 1996.

Yokogawa, T., "Vibration Type Liquid Density Measuring System," Yokogawa Electric Works, Tokyo, Japan.

Zacharias, E.M., "The Sonic Interface Detector," *Oil & Gas Journal*, July 8, 1970.

© 2003 by Béla Lipták

6.2 Displacement- and Float-Type Densitometers

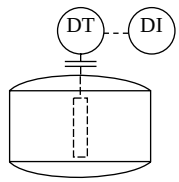

Flow Sheet Symbol

C. H. HOEPPNER (1982) **B. G. LIPTÁK** (1969, 1995)
J. E. JAMISON, S. EDVI (2003)

Types of Designs:	A. Conventional displacer B. Chain-balanced float C. Electromagnetically suspended float D. Angular position of displacer floats
Design Pressure:	A. C. Up to 1500 PSIG (103 bars) B. Glass tubes up to 100 PSIG (7 bars); others to 500 PSIG (34 bars) C. Up to 200 PSIG (14 bars) D. Up to 1000 PSIG (69 bars)
Design Temperature:	A, Generally in the range of –50 to 450°F (–45 to 230°C); special designs from –350 to 850°F (–212 to 472°C) B. Up to 450°F (232°C) C. Up to 350°F (177°C) D. Up to 500°F (260°C)
Materials of Construction:	A. Displacers available in 316 stainless steel, Monel, polypropylene, or solid Teflon; hanger assembly available in 316 stainless steel, Monel, or Hastelloy C; cage is usually steel or stainless steel B. Wetted parts can include Pyrex, Teflon, 316 stainless steel, tantalum, polyvinyl chloride, Alloys 20, Hastelloy, K-Monel C. Stainless steel D. Aluminum or stainless steel
Minimum Span:	A, B. 0.005 SG C. 0.01 SG D. 0.1 SG
Inaccuracy:	A. 0.5% of span B. The larger of 0.0002 SG or 3% of span C. 0.5 to 1% of span D. 0.0005 SG
Costs:	A. A 32 in. (0.81 m) displacer in a steel cage with an electronic transmitter costs about $2000 B. An indicator in a Pyrex glass tube costs $900; an electronic transmitter with temperature compensation costs about $3500 C, D. Over $3000
Partial List of Suppliers:	Delta Controls Corp. (A) (www.delta@deltacnt.com) Eckardt Process Instrumentation Ltd. Div. of Invensys (A) (www.foxboro-eckardt.com) Fisher Controls International, a Div. of Emerson Process Management (A) (www.emersonprocess.com) The Foxboro Co., a Div. of Invensys (A) (www.foxboro.com)

© 2003 by Béla Lipták

Instruments & Control Inc. (A) [(203) 481–7278]
Kimray Inc. (A) (www.kimray.com)
Lucas Schaevitz (A) (www.schaevitz.com)
Masoneilan, a Div of Dresser (A) (www.masoneilan.com)
Moore Products, a Div. of Siemens (A) (www.sea.siemens.com)
Norriseal Controls, a Dover Resources Co. (A) (www.norriseal.com)
Potter Aeronautical Corp. (D)
Princo Instruments Inc. (B) (princoinstruments.com)
Robertshaw Controls, a Div. of Invensys (A) (www.robertshaw.com)
Sangamo Controls Ltd. (C) (www.sangamo.com)

INTRODUCTION

Density is the weight of a fixed volume. When an object of a fixed volume and of a known density is submerged in a process fluid, the resulting buoyant force can be detected as an indication of process density. As the density of the process fluid increases, the apparent weight of the displacer will drop.

If the submerged float is lighter than the process fluid, the buoyant force will try to lift it out of the fluid, and a force will be needed to keep the float submerged. If the displacer is heavier than the process fluid, it will have a tendency to sink and a force will be required to hold it in position.

The liquid densitometers covered in this section all operate with floats or displacers that are permanently submerged in the process fluid. They all detect the buoyant force variations as it changes with fluid density.

DISPLACER-TYPE DENSITOMETERS

Archimedes' principle states that a body that is wholly or partially immersed in a fluid is buoyed up by a force equal to the weight of the fluid displaced. When this principle is used to build densitometers, they will be distinguished by the ways this force is detected and how that force-detecting mechanism is sealed from the process.

In this section, the force detecting mechanisms discussed will include the torque tubes, the chain balanced, electromagnetically suspended, and the angular momentum generating designs. In each of these cases, the seal has to be frictionless and suited for a wide range of pressures, temperatures, and corrosive conditions. In case of the chain loaded or magnetically suspended design, the problem of sealing is eliminated, because the float position is detected through the pipe wall by linear variable differential transformer (LVDT) or search coil type electrical methods. In case of the torque tube type buoyant force detector, this tube also acts as the seal (Figure 6.2a), while with the diaphragm type force-balance transmitters, the diaphragm itself is the seal.

The Torque-Tube-Type Displacer

The basic difference between a level and a density displacer is that the displacer float, in the case of level sensing (see Section 3.7), is only partially covered with the process fluid, while for density detection, it is always totally immersed. Therefore, in the second case, changes in buoyant force are only a function of density variations.

Figure 6.2a shows the basic components of a torque-tube-type displacer instrument, and Figure 6.2b illustrates some of the modifications that are desirable when this device is used as a density sensor. The sample fluid enters around the center section of the cage, through a piezometer ring that eliminates the velocity effects of the flowing liquid. If the sample fluid velocity is below 2 ft (0.6 m)/min, the piezometer ring is not essential. The sample fluid leaves the cage through the top and bottom connections. It is recommended that these flows be maintained constant by the use of flow regulating purgemeters.

The above system applies when the density measurement is made in a sample bypass of the process piping. If the density is to be detected in tanks or vessels, the flange mounted displacers illustrated in Figures 6.2c and 6.2d should be considered if the level in the tanks will never drop below the top

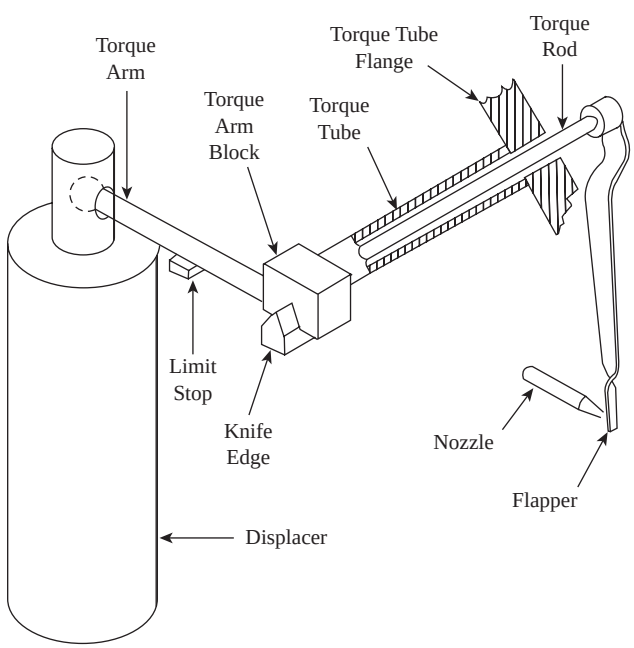

FIG. 6.2a
The buoyant force generated by a suspended displacer can be detected by a torque tube.

© 2003 by Béla Lipták

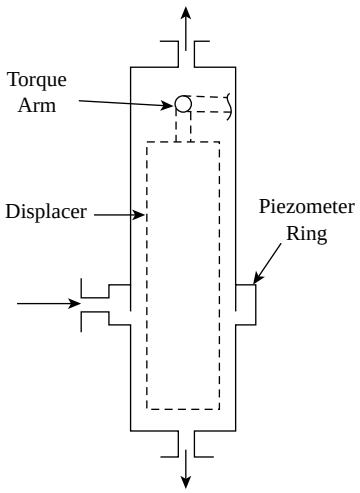

FIG. 6.2b
Displacer density sensor.

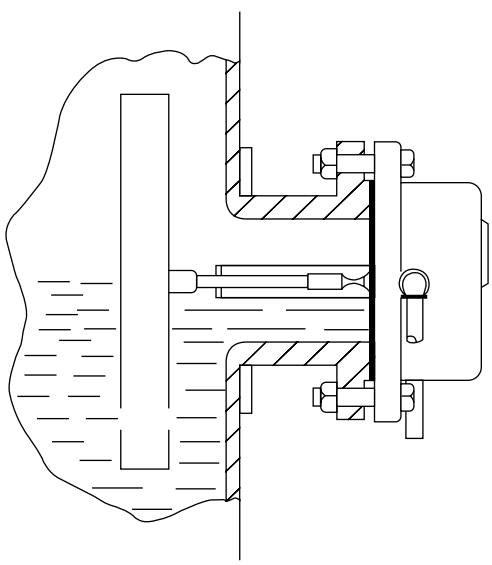

FIG. 6.2c
Displacer mounted on the side of a tank. (Courtesy of Siemens Moore Energy and Automation.)

of the displacer floats. For dimensional information, construction materials, pressure ratings, and density ranges of some of the standard displacers, refer to Table 6.2e.

Sizing the Displacer Float In a torque-tube-type displacer, the standard force range is 0 to 0.72 lbf (0 to 0.33 kgf), while for a thin-wall tube it is half as much, or 0 to 0.36 lbf (0 to 0.17 kgf). Therefore, the sizing of the displacer involves the selection of a displacer volume that will change its apparent weight by these amounts as a result of the process fluid density changing from its minimum to its maximum value. The required displacer volume can be calculated as:

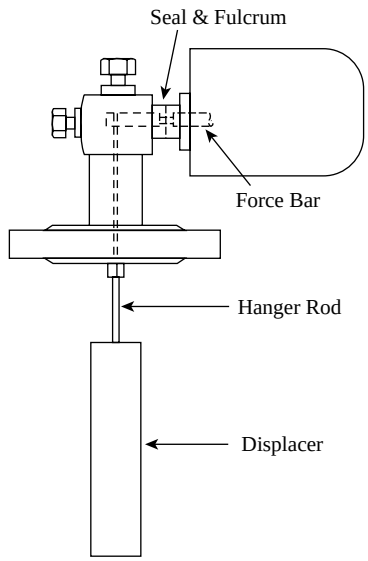

FIG. 6.2d
Diaphragm sealed displacer mounted on top of a flooded tank. (Courtesy of The Foxboro Company, a Division of Invensys.)

$$\text{volume (in.}^3\text{)} = \text{torque tube force}/(SG_{max} - SG_{min}) \times (\text{weight of in.}^3 \text{ of } H_2O) \qquad \textbf{6.2(1)}$$

If a thin-wall torque tube is to be used (0 to 0.36 lbf) and if the density range required is between 0.99 SG and 1.00 SG, then the volume (V) required can be calculated as:

$$V = 0.36/(1.00 - 0.99) \times 0.036 = 1000 \text{ in.}^3 \qquad \textbf{6.2(2)}$$

This would approximately correspond to a 36 in. long, 6 in. diameter (914 mm long, 152 mm diameter) displacer.

Table 6.2f lists some of the standard displacers with their corresponding volumes and the density spans that will generate the required buoyant force change for standard and thin-wall torque tubes. As can be seen from the table, increasing displacer volume will reduce the span, and therefore the minimum span corresponds to the maximum available displacer volume.

Features and Limitations The displacer-type density sensors are available either as transmitters or local controllers. Temperature compensation is available and should be specified whenever high precision is needed.

The displacement-type density sensors are recommended for use on clean and nonviscous services. This is because viscous or slurry-type materials would stick to the displacer, which would change its volume. This is unacceptable because for accurate measurements, both the displacer volume and weight must remain constant.

Displacer-type densitometers should not be placed directly into the process pipeline, but be located in a bypass, where the sample flow to them can be kept low and constant. The velocity effects can be eliminated by the use of piezometer rings (Figure 6.2b). Therefore, the displacement-type density

© 2003 by Béla Lipták

TABLE 6.2e
*Data on Displacer Materials, Sizes, and Other Features**

	Metric Displacer Data				English Displacer Data				
			Maximum Working Pressure						
Material	L (mm)	OD (mm)	MPa	bar or kg/cm^2	L (in.)	OD (in.)	Maximum Working Pressure (psi)	Approximate Relative Density of Displacer (Specific Gravity)	Permissible Process Liquid Relative Density Limits (SG Term)
	356	76	6.9	69	14	3	1000	2.95	0.42 and 1.6
	610	51	10.3	10.3	24	2	1500	2.52	0.56 and 2.7
		76	6.9	69	24	3	1000	1.69	0.25 and 0.98
	813	51	10.3	103	32	2	1500	2.28	0.42 and 1.6
	813	76	6.9	69	32	3	1000	1.22	0.18 and 0.7
	1016	51	10.3	103	40	2	1500	2.38	0.33 and 1.4
	1219	42	10.3	103	48	1.66	1500	2.27	0.39 and 1.6
	1270	51	7.6	76	50	2	1100	1.90	0.27 and 1.0
316 ss	1524	38	10.3	103	60	1.5	1500	2.41	0.39 and 1.6
	1524	76	10.3	103	60	3	600	1.31	0.10 and 0.4
	1829	33	10.3	103	72	1.31	1500	2.58	0.42 and 1.7
	2134	32	10.3	103	84	1.25	1500	2.60	0.40 and 1.6
	2438	27	10.3	103	96	1.05	1500	2.96	0.49 and 2.0
	2540	32	10.3	103	100	1.25	1500	2.43	0.34 and 1.4
	2743	27	10.3	103	108	1.05	1500	2.80	0.44 and 1.8
	2743	51	6.7	67	108	2	975	1.64	0.12 and 0.5
	3048	25	10.0	100	120	1	1450	2.47	0.44 and 1.8
	3810	25	10.0	100	150	1	1450	2.44	0.35 and 1.4
	356	76	6.9	69	14	3	1000	1.63	0.42 and 1.6
	610	76	6.5	65	24	3	950	1.69	0.25 and 0.98
Monel	813	51	10.3	103	32	2	1500	2.28	0.42 and 1.6
	1524	51	6.9	69	60	2	1000	1.88	0.22 and 0.89
	2134	33	10.3	103	84	1.31	1500	2.60	0.36 and 1.5
	3658	25	5.2	52	144	1	750	2.47	0.37 and 1.5
Solid	356	76	10.3	103	14	3	1500	2.28	0.42 and 1.6
Ptfe	813	51	10.3	103	32	2	1500	2.28	0.42 and 1.6
	1219	41	18.3	183	48	1.6	2650	2.28	0.42 and 1.6

*Courtesy of The Foxboro Company

sensors should only be considered for clean, nonviscous process streams and for bypass installations with sample flow regulated in the low gal/h flow range.

Chain-Balanced Densitometer

Figure 6.2g illustrates this flow-through-type density indicator in which the submerged float and chain assembly displaces a fixed fluid volume. The buoyant force generated by the float is a function of the density of the process fluid, and an increase in density causes the float to rise. As it rises, it will support a larger portion of the calibrated chain until that weight matches and cancels out the increase in buoyancy so that a new equilibrium condition is achieved. The new float position is an indication of the change in fluid density.

The wetted parts of this indicator are available in a large variety of corrosion-resistant materials, including Pyrex, and clear plastics for the chamber. Specific gravity (SG) spans from 0.005 to 0.2 can be obtained within the limits of 0.5 and 3.5 SG. The inaccuracy is the larger of ±1% of full span and 0.0002 SG.

This densitometer should only be used for applications where the process stream has less than 50 cP (0.05 Pa·s) viscosity. The sample flow rate through the instrument should be kept between 5 and 30 gal/h (19 and 114 l/h). Higher viscosities or higher flow rates will introduce velocity and friction effects that will reduce the measurement accuracy.

Transmitters The chain-balanced density sensor is also available as a transmitter. Here the density-related vertical position of the float is detected by the inductance pickup arrangement shown in Figure 6.2h. This arrangement consists of a magnetic core inside the float and a three-winding LVDT

© 2003 by Béla Lipták

TABLE 6.2f
Minimum Spans and Float Dimensions for Displacement-Type Densitometers

Displacer Float			Minimum Specific Gravity Span	
Diameter (in./mm)	*Length (in./mm)*	*Volume ($in.^3/cm^3$)*	*Standard Tube*	*Thin-Wall Tube*
3/76	14/356	99/1622	0.202	0.101
3/76	32/813	226/3703	0.088	0.044
3/76	48/1219	340/5572	0.059	0.030
3/76	60/1524	425/6964	0.047	0.024
4/102	14/356	176/2884	0.114	0.057
4/102	32/813	402/6588	0.050	0.025
4/102	48/1219	602/9865	0.033	0.017
4/102	60/1524	753/12339	0.027	0.014
6/152	14/356	396/6489	0.051	0.026
6/152	32/813	905/14830	0.021	0.011
6/152	48/1219	1360/22286	0.015	0.008
6/152	60/1524	1700/27858	0.012	0.006

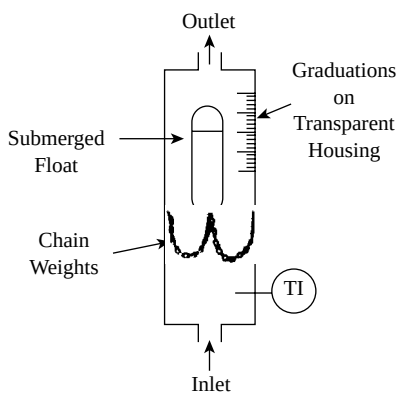

FIG. 6.2g
Chain-loaded density indicator.

outside the chamber. Float movement causes an inductance change in the transformer with a resultant change in the differential voltage output. This output is rectified and detected by a potentiometer as a measure of density.

When the process temperature varies, automatic temperature compensation should be specified to correct the apparent fluid density for the difference between the actual temperature and a predetermined reference temperature. To accomplish this goal, a resistance temperature detector-type temperature sensor is furnished and the readout instrument is provided with adjustments to permit setting the correct compensation values for the application.

The features of the chain-balanced density transmitter are similar to those of the chain-balanced indicator. The only exception is that the chamber can be furnished in corrosion-resistant metallic or plastic-lined materials, and, consequently,

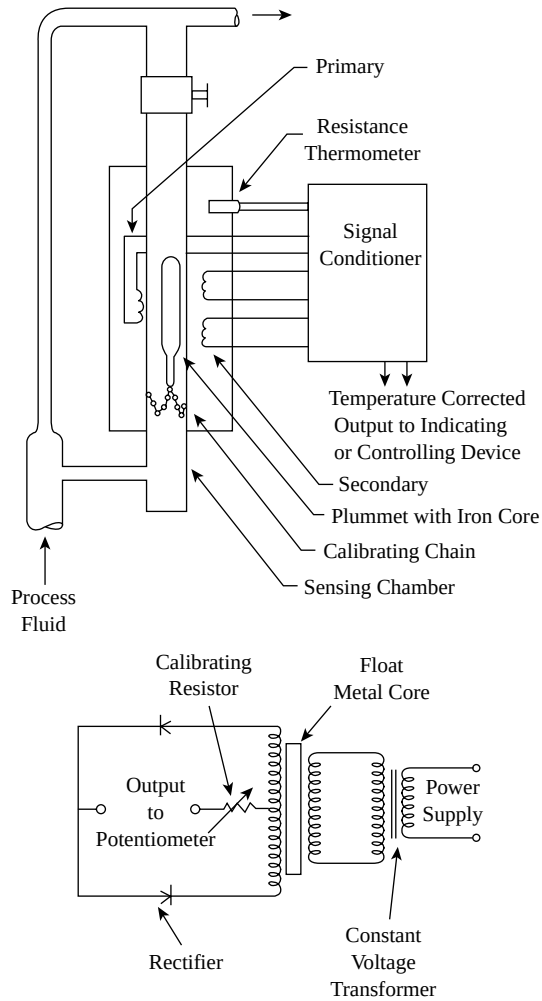

FIG. 6.2h
Chain-balanced density transmitter with automatic temperature compensation. (Courtesy of Princo Instruments Inc.)

pressure and temperature limits can be increased to 500 PSIG (3.4 MPa) and 450°F (232°C), respectively. The specific gravity spans of the transmitters are the same as of the indicators, but their inaccuracy is somewhat greater. These transmitters can be calibrated to keep the measurement error within ±1% at the desired control point, but at the extreme ends of the span, the inaccuracy will increase to about ±3%. The speed of response is a function of sample flow rate, and averages to be around 30 s.

Electromagnetic Suspension Densitometer

The instrument illustrated in Figure 6.2i has a float that is totally immersed in the process fluid and is electromagnetically suspended. A pair of search coils, which are fed by a high frequency supply, detect the position of the gold-plated ferrous alloy float. The float selected should be slightly denser than the maximum density of the fluid to be measured so that it always tends to sink.

© 2003 by Béla Lipták

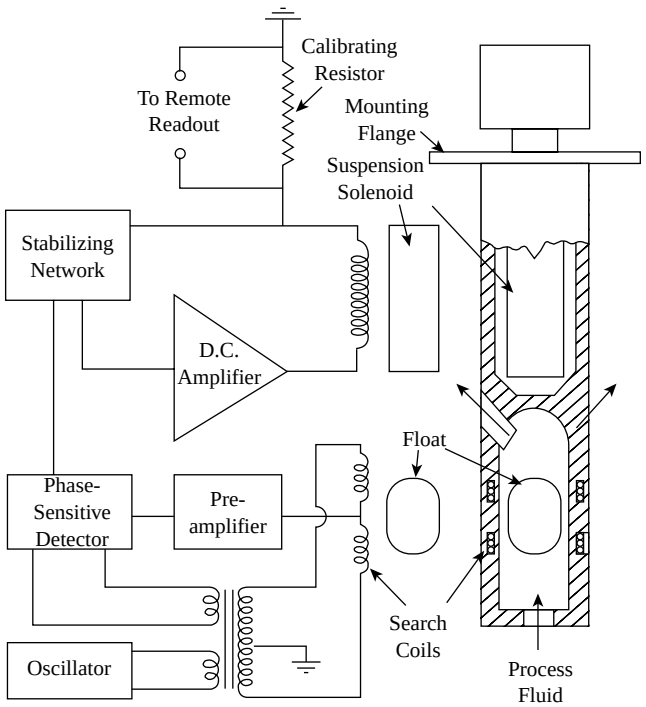

FIG. 6.2i
Magnetic suspension density sensor.

The float is prevented from sinking by the solenoid situated directly above the float, which generates the electromagnetic force required to hold the float in place. The float is maintained centrally between the two search coils by the electronic circuit in the head of the instrument. These circuits adjust the amount of current required for the solenoid to maintain the float centrally between the two search coils.

If the density of the fluid decreases, the float will start to sink. This change in position is detected by the search coils and results in an unbalance signal to the amplifier and demodulator, causing an increase in the current to the solenoid. This increases the force of magnetic attraction on the float and restores it to its original centered position. Thus, a closed-loop servo system within the instrument accurately positions the float by varying the current to the solenoid. Using a stable calibrating resistor, this current is measured as a measure of fluid density.

Design Features Where operating temperatures are expected to vary, the density transmitter is furnished with a temperature compensation unit using platinum resistance wire elements. The adjustments on this unit allow for setting the temperature reference anywhere between 32 and 212°F (0 and 100°C). The temperature coefficient for the particular fluid is also adjustable between zero and 0.009 SG/°F.

The plummet floats inside the lower portion of the epoxy probe housing, touching nothing but the process liquid. Therefore, it is insensitive to the effects of liquid surface tension. This density sensor can be directly immersed into the process by being mounted on a tank or pipeline nozzle. It can also be provided with a sample chamber for mounting in a bypass line. In either case, it is to be mounted within one degree of the vertical, and in a location where magnetic materials will not be closer than a foot (305 mm) from the float.

The wetted parts are made of epoxy, stainless steel, and gold-plated for corrosion resistance. For proper operation, the sample flow rates should not exceed a few gal/h and process viscosities should not exceed a few centipoises. Higher flows or viscosities will cause measurement errors, because they will result in vertical forces on the float. Deposits on the float will also result in measurement errors. For this reason this instrument is not recommended for slurry service.

The available full spans for this instrument range from 0.01 to 0.4 specific gravity units within the limits of 0.4 and 2.0 SG. Measurement inaccuracies are between1/2 to 1% of full span. One reason for this high accuracy is that the instrument detects only the difference between float and fluid densities. Consequently, the highest precision can be obtained when the liquid density to be measured is close to the density of the float. Pressure and temperature limitations are 200 PSIG (138 kPa) and 350°F (177°C), respectively.

Angular Position Densitometer

As illustrated in Figure 6.2j, in this density detector the process fluid sample flows continuously through the detector at a constant rate of under 30 gal/h (114 l/h). The gauge chamber contains three displacer floats, each of different density and volume. The solid displacers are spaced 90 to 100 degrees apart and attached to a common shaft. Any process fluid density causes the shaft to be rotated by the displacers to a precise angular position. This rotation is a function of the float positions and of the buoyant forces. By balancing the three displacer moments, the assembly is continuously in equilibrium. The angular position of the assembly is transmitted to the electrical components through magnetic coupling. The output signal to the remote readout or control devices can be in either analog or digital form.

Because the displacers are made of solid materials, process pressure variations will have no effect on their volume.

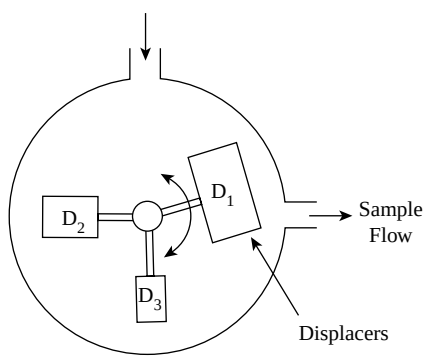

FIG. 6.2j
Angular position density sensor.

© 2003 by Béla Lipták

Similarly, the influence of process temperature variations is minor because the floats are made of materials with low coefficients of expansion. A change of 200°F (111°C) will result in a measurement shift of only 0.0001 SG.

Performance Detection accuracy is ±0.0005 to 0.001 SG and is unaffected by the span used. Due to the magnetic coupling utilized in transmitting the angular position of the shaft, the design pressure and temperature rating of the unit are high.

It is desirable to maintain the sample flow rate constant and to remove any particles that are 20 μm in size or larger. This density detector is limited to clean, nonviscous services, although viscosities up to 500 cP (0.5 Pa·s) can be tolerated. Temperature compensation can be obtained through the installation of additional sensing and computing elements.

CONCLUSIONS

The various displacement-type density sensors covered in this section are reliable and reasonably accurate instruments. When only local indication is desired and glass or plastic materials can be used, the chain-balanced unit is the logical choice. Where a density transmitter is required and temperature compensation is not essential, the torque tube type conventional displacer is the most economical selection. It is compatible with most corrosive fluids, and its pressure and temperature rating are high enough for most applications.

Bibliography

Cameron, D., "An Instrument for Measurement of Liquid Density," *Industrial Electronics*, March 1967.

Capano, D., "The Ways and Means of Density," *InTech*, November 2000.

"Density and Specific Gravity," *Measurements and Control*, October 1991.

Garside, J. and Mullin, J.W., "Continuous Measurement of Solution Concentration in a Crystallizer," *Chemistry and Industry*, 1966, pp. 2007–2008.

Gillum, D., "Industrial Pressure, Level, and Density Measurement," Research Triangle Park, NC: ISA Press, 1995.

Honeywell Instrumentation Data Sheet #10.14–3a, "Continuous Measurement and Control of Density," Morristown, NJ.

Magaris, P., "On-Line Density Measurement Is Fast and Accurate," *Control Engineering*, June 1981.

"Standard Practice for Calibration of Transmission Densitometers," *ASTM Standard*, 1998.

© 2003 by Béla Lipták

6.3 Hydrometers

C. H. HOEPPNER (1982) **B. G. LIPTÁK** (1969, 1995, 2003)

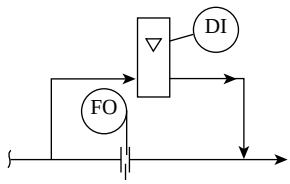

Flow Sheet Symbol

Types:	Laboratory or industrial, can be indicating or transmitting
Design Pressure:	Generally atmospheric, but the glass variable area flowmeter designs can be used up to 100 PSIG (6.9 bars)
Design Temperature:	Generally to 200°F (93°C)
Materials of Construction:	Laboratory units are made of glass and unbreakable plastics; industrial units are available in similar materials as are variable area flow-meters (Section 2.27).
Ranges:	Minimum span is 0.05 SG; maximum span is 0.5 SG. Spans can be selected within the specific gravity range of 0.6 and 2.1. Minimum scale divisions are 0.0005 SG.
Inaccuracy:	1% of span
Cost:	Laboratory units cost between $15 and $50. Industrial indicators start at around $500, and transmitters at $2000 in standard materials. (Costs are higher for corrosion-resistant materials.)
Partial List of Suppliers:	ABB Inc. (www.abb.com); Brooklyn Thermometer Co. (www.brooklynthermometer.com) Cole-Parmer Instrument Co. (www.coleparmer.com) Elite Scientific Corp. (www.ambalayellowpages.com) ERTCO (Ever Ready Thermometer Co.) (www.ertco.com/hydrometers) H-B Instrument Co. (www.hbinstruments.com) Princo Instruments Inc. (www.princoinstruments.com)

INTRODUCTION

According to Archimedes' principle, when a body is immersed in a fluid, its weight drops by the same amount as the weight of the liquid that it has displaced. Therefore, all hydrometers will sink until they displace the same mass of liquid as their own mass. The volume of liquid displaced is indicated by the level on the scale and density is the ratio of the hydrometer's mass divided by the displaced volume. As the density of liquids change with temperature, most hydrometers include a thermometer for temperature compensation purposes.

DESIGN VARIATIONS

The hydrometer element consists of a weighted float with a small-diameter indicator stem attachment at the top of the float as shown on Figure 6.3a. The stem is graduated in any of the density units discussed in Section 6.1. The hydrometer has a constant-weight body, which, if immersed in fluids with differing densities, will displace differing volumes of fluid. Therefore, the degree of stem scale submersion is an indication of the fluid's density. Readings are made at the point where the stem emerges from the liquid. The accuracy of

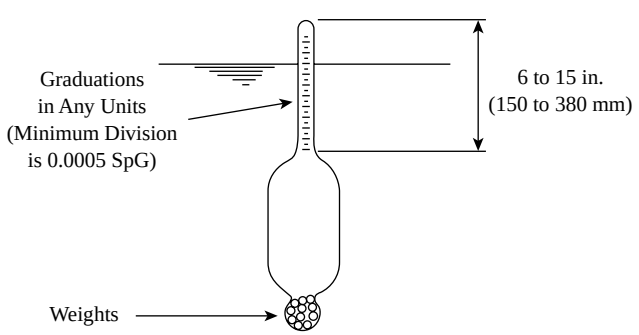

FIG. 6.3a
Hand hydrometer.

© 2003 by Béla Lipták

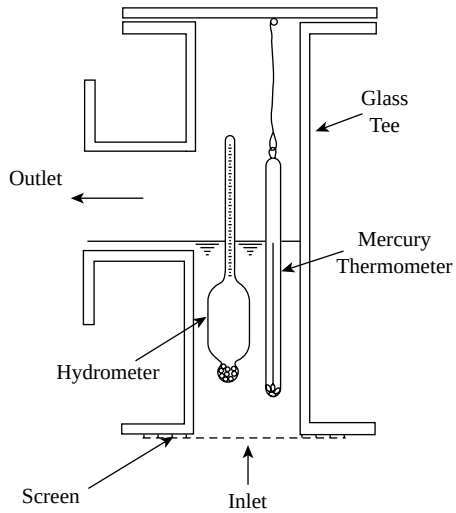

FIG. 6.3b
In-line hydrometer indicator.

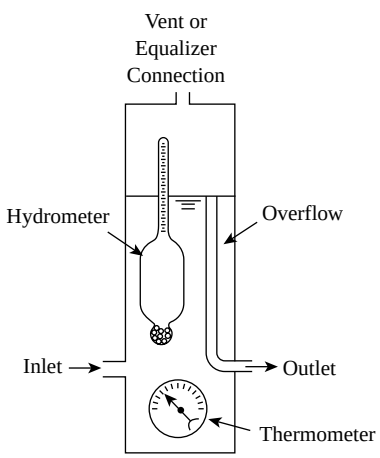

FIG. 6.3c
In-line hydrometer in rotameter housing.

measurement is a function of the combined effects of surface tension, turbulence, and sample contamination.

In-Line Designs

One of the simplest in-line density indicators is illustrated in Figure 6.3b. It consists of a transparent glass tee with a hydrometer and a thermometer inside. Constant level is maintained in this tee, because the process fluid sample enters from the bottom and overflows. The sample flow rate is maintained at less than l gal/m (3.78 l/m) to minimize the effects of velocity and turbulence. If the process temperature varies, a thermometer is added to allow for manual temperature compensation.

Industrial Designs

The hydrometer element can be mounted inside a variable-area flowmeter (Section 2.27) housing. In such designs, as shown in Figure 6.3c, overflow pipes are provided to maintain the constant level inside the glass tube. Standard accessories include needle valves for sample flow rate control at about 15 gal/h (57 l/h) and integral thermometers.

Wetted parts are available in the same range of materials as for variable area flowmeters. These units can withstand up to 200°F (93°C) and 100 PSIG (690 kPa). Specific gravity (SG) spans of 0.1 to 0.5 are available and can be selected within the limits of 0.6 and 2.1 SG. Reading inaccuracy is 1% of span or the smallest division on the scale, which can range from 0.001 to 0.005 SG.

Transmitters

The variable immersion hydrometer element mounted in a rotameter housing can also be obtained as a transmitter for remote readout, as illustrated in Figure 6.3d three-dimensional. This electronic transmitter can be the servo-operated impedance bridge type and can be provided with automatic temperature compensation. Such compensation will convert the actual density, which is detected to the density that it would correspond to at a predetermined base temperature. Ranges, accuracies, and design limitations are the same as given for the local indicator version, discussed earlier.

The stem position of the hydrometer can also be detected optically. In this design, as the stem rises and falls it changes the amount of light that passes to a photocell. The photocell output is calibrated in specific gravity units.

Another transmitting hydrometer design is the capacitance type. Here, a stainless steel hydrometer positions a dielectric cup inside two insulated, concentric cylinders. The resulting change in capacitance is proportional to density. Automatic temperature compensation is provided with this unit so that the transmitted output signal can be referenced to 60°F (16°C). The transmission can either be analog or digital.

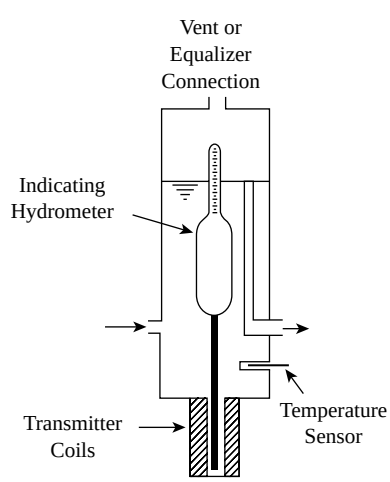

FIG. 6.3d
Hydrometer transmitter in rotameter housing.

© 2003 by Béla Lipták

CONCLUSIONS

The hydrometers discussed above are basic to density measurement. They are accurate, frictionless, and direct-indicating without the need for mechanical linkages or external energy sources. They are compatible with most corrosive fluids.

Their limitations are also multiple, because the float position should not be affected by anything except the fluid density. Effects of the velocity, friction, turbulence, and viscosity of the process must all be minimized. In addition, material buildup on the float cannot be tolerated, because the basis of hydrometer operation is the assumption that the weight of the float is constant. For these reasons, hydrometers should only be considered for use on clean, nonviscous process fluids when the sample flow rate is controlled at around 1 gal/h.

Bibliography

Cameron, D., "An Instrument for Measurement of Liquid Density," *Industrial Electronics*, March 1967.

Capano, D., "The Ways and Means of Density," *InTech*, November 2000.

"Density and Specific Gravity," *Measurements and Control*, October 1991.

Gupta, S.V., *Practical Density Measurement and Hydrometry*, Bristol, U.K.: Institute of Physics, 2002.

Honeywell Instrumentation Data Sheet #10.14–3a, "Continuous Measurement and Control of Density," Morristown, NJ, latest edition.

Magaris, P., "On-Line Density Measurement Is Fast and Accurate," *Control Engineering*, June 1981.

November, M.H., "Measuring Fluid Density and Specific Weight," *Instrumentation Insight*, Vol. 2, No. 3, August 1975.

"Standard Practice for Calibration of Transmission Densitometers," *ASTM Standard*, 1998.

© 2003 by Béla Lipták

6.4 Hydrostatic Densitometers

C. H. HOEPPNER (1982) **B. G. LIPTÁK** (1969, 1995, 2003)

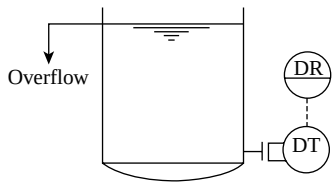

Flow Sheet Symbol

Types:	A. Bubbler B. d/p cell
Design Pressure:	Up to 5000 PSIG (34.5 MPa)
Design Temperature:	Up to 350°F (177°C); higher with filled volumetric elements
Materials of Construction:	Stainless steel, Hastelloy, Monel, tantalum, titanium, duranickel, or Kel-F and Teflon linings
Inaccuracy:	For standard d/p transmitters, the basic error is ±0.1 to 0.5% of actual span plus the temperature and pressure effects on span and zero. For intelligent transmitters, the total error is between ±0.1 and 0.2% of actual span.
Costs:	A manometer-type indicator costs about $250. A complete air bubbler assembly costs about $500. Motion balance bellows indicators cost around $1000, and force balance d/p transmitters range from $1500 to $2500, with the higher costs corresponding to the intelligent units.
Partial List of Suppliers:	Aalborg Instruments & Controls (www.aalborg.com) ABB Instrumentation Inc. (A, B) (www.abb.com) ASCO (A) (www.ascovalve.com) Barton Instrument (B) (www.barton-instruments.com) Blue White Industries (A) (www.bluewhite.com) Brooks Instrument Div. of Rosemount (A) (www.brooksinstrument.com) Dwyer Instruments Inc. (A, B) (www.dwyer-inst.com) Endress + Hauser Instruments (B) (www.systems.endress.com) Enraf (B) (www.enraf.com) Fisher Controls International Inc. (B) (www.fisher.com) Flowmetrics Inc. (A) (www.flowmetrics.com) Foxboro-Invensys (B) (www.foxboro.com) Honeywell Industrial Controls (B) (www.honeywell.com/acs/cp/index/jsp) King Engineering Corp. (A, B) (www.king-gage.com) Krone America Inc. (A) (www.kroneamerica.com) Meriam Instrument (A) (www.meriam.com) McMillan Co. (A) (www.mcmillancompany.com) Omega Engineering (A) (www.omega.com) Porter Instrument Co. (A) (www.porterinstrument.com) Rosemount Inc. (B) (www.rosemount.com) Scannivalve Corp. (A) (www.scannivalve.com) Schlumberger Industries (B) (www.sbl.com/rms/measurement) Siemens Energy and Automation (B) (www.sea.siemens.com) Smar International (www.smar.com/products/function.asp) U.S. Filter Wallace & Tiernan Inc. (A) (www.usfwt.com) Viatran Corp. (B) (www.viatran.com) Yokogawa Corp. of America (B) (www.yca.com)

© 2003 by Béla Lipták

INTRODUCTION

The weight or hydrostatic head of a liquid column of fixed height will vary as a function of its density. The hydrostatic head method of density measurement requires the same components and installation as does the measurement of liquid interface levels (see Figure 3.6r). The two features that distinguish density or interface measurement from conventional level detection are:

1. Both hydrostatic head detection taps are located below the liquid surface.
2. The range of the d/p (differential pressure) cell is suppressed.

SIZING THE HYDROSTATIC HEAD TANK

In density measurement installations, the output signal of the d/p cell is expected to be zero when the density of the process fluid is at its minimum. This means that the d/p cell span needs to be elevated (see Figure 6.4a for the definitions of associated terms) by the product of the minimum density (SG_{min}) and the height of the hydrostatic column (H).

The output signal of the density sensing d/p cell is expected to be 100% when the process fluid density reaches its maximum (SG_{max}). Therefore, the required d/p cell span is $H(SG_{max} - SG_{min})$. Knowing the expected minimum and maximum values of the process density and knowing the minimum span available for the d/p cell, one can calculate the required (minimum) height of the hydrostatic head tank, which is used for the density measurement.

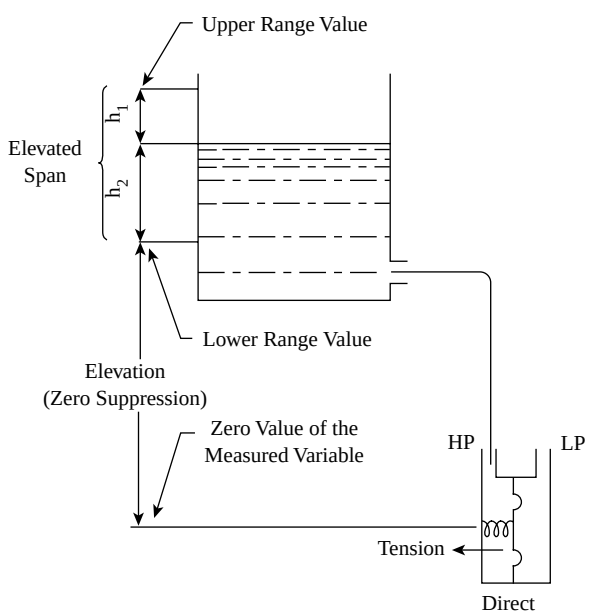

FIG. 6.4a

The terminology associated with an installation—such as density detection—where the d/p cell requires the elevation of its span.

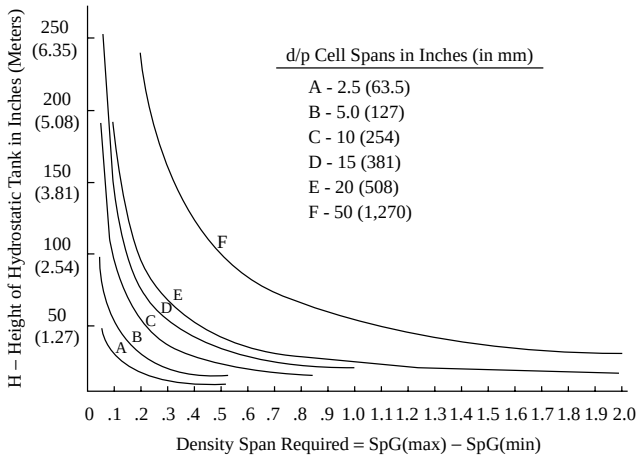

FIG. 6.4b

Knowing the required density span and the span of the d/p cell to be used, one can determine the minimum height required for the hydrostatic tank.

Assuming that the minimum span of the d/p cell is 5 in. (127 mm) of H_2O and the specific gravity (SG) is to be detected from a minimum of 0.65 SG up to a maximum of 0.70 SG, the minimum column height (H) required is:

$$H = 5/(0.7 - 0.65) = 100 \text{ in. (or } 2.54 \text{ m)} \qquad \textbf{6.4(1)}$$

Figure 6.4b has been prepared to relate density span (in specific gravity units) and d/p cell range to hydrostatic tank height. It can be seen that the narrower the density range, the taller the hydrostatic tank needs to be. It can also be seen that one way to reduce the tank height is to select a d/p cell with a narrower span.

USING BUBBLERS

One of the oldest methods of hydrostatic density measurement is the use of a dual-bubbler (Figure 6.4c). In this installation two bubbler pipes of different lengths are installed in the tank where the process density is to be detected. The bubbler pipes are inserted to different depths so that the pressure difference they detect reflects the hydrostatic head of the process liquid column having a height of H. Usually an inclined manometer is used as a readout, because it can amplify the visibility of small pressure differences.

A complete dual-bubbler-type densitometer package is illustrated in Figure 6.4d. The components of this preassembled package include a reference tank, provided with the same H dimension as the H dimension in the process tank. If the reference tank is filled with a reference fluid having the same density as the minimum value on the densitometer span (SG_{min}), then by periodically switching the air purge into the reference tank, the inclined manometer can be rezeroed.

© 2003 by Béla Lipták

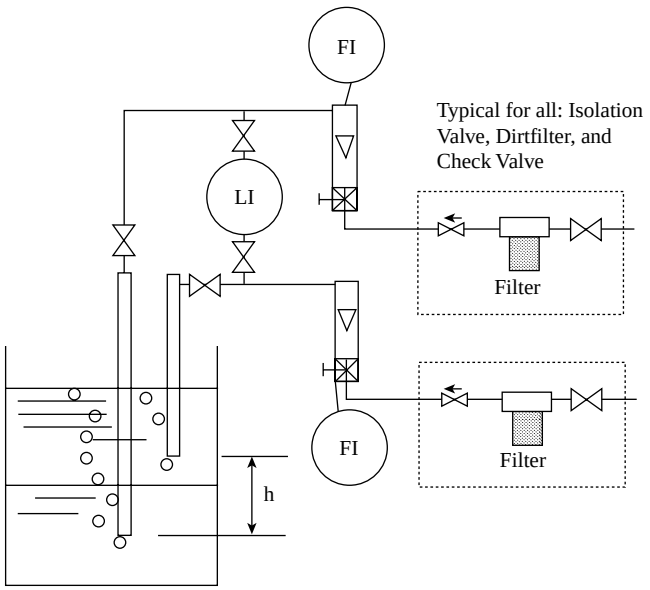

FIG. 6.4c

The measurement of density by using a local d/p indicator in combination with a dual-bubbler system.

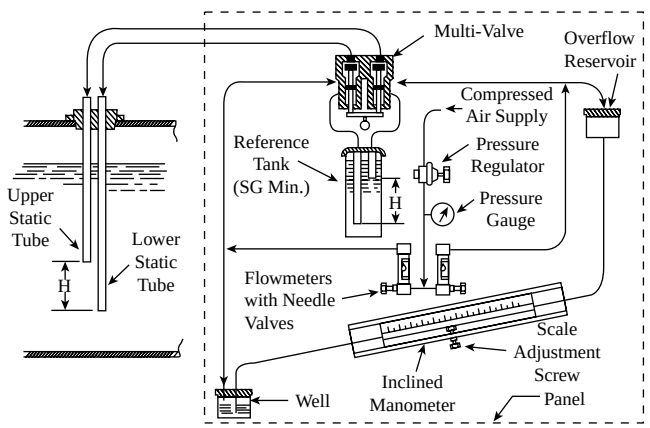

FIG. 6.4d

Reference tank filled with a reference fluid of SG_{min} density and manometer with adjustable scale provide the means for rezeroing the densitometer.

Rezeroing is made convenient by providing a scale adjustment screw to shift the scale on the manometer.

USING D/P CELLS

Figures 6.4e and 6.4f illustrate the basic configurations of using hydraulic head measurement in detecting the density in atmospheric and pressurized tanks. In these figures, H designates the constant liquid column height that is being measured. If it is desired to measure the specific gravity in the range of SG_{min} to SG_{max}, the span (or range) of the d/p detector is always $H(SG_{max} - SG_{min})$, regardless of the type of installation.

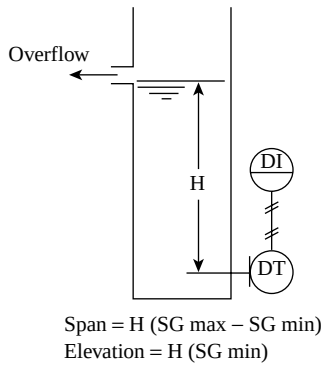

FIG. 6.4e

Density detection in fixed level atmospheric tank.

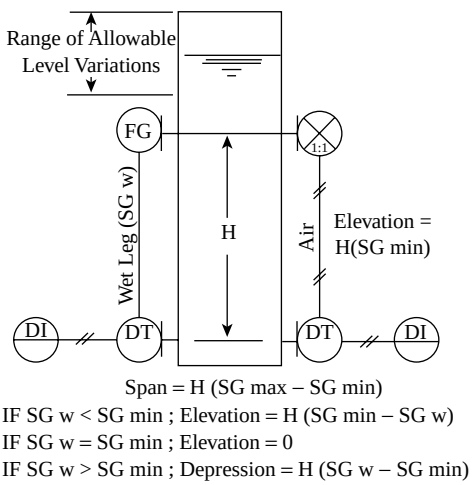

FIG. 6.4f

Density detection in variable level open or pressurized tanks.

Elevation Considerations

If the span is so selected, when the specific gravity of the process fluid is SG_{min}, the d/p cell output must be zero. Therefore, it is necessary to elevate the instrument zero, (suppress the range), allowing the d/p cell to devote its full range to the differential caused by the changes in density. The range is elevated by $H(SG_{min})$ when density is detected in an open tank, operating at a fixed level (Figure 6.4e). The range is also elevated by $H(SG_{min})$ when a pressure repeater is used at the upper sensing point (right side of Figure 6.4f).

When the installation is of the wet leg type (left side of Figure 6.4f), the required shift in the instrument "zero" is a function of the density of the fluid used in filling the wet leg. If the filling fluid is of the same density as the minimum of the densitometer range (SG_{min}), then the d/p cell elevation is zero; it requires no adjustment. If the filling fluid density is below SG_{min}, the zero must be depressed. If the filling fluid density is greater than SG_{min}, elevation is required.

In some d/p cells, only zero suppression (range elevation) is provided, and, therefore, if the wet leg hydrostatic head is

© 2003 by Béla Lipták

higher than the tank side head, the d/p cell is reversed, so that its "high pressure" side will be connected to the wet leg.

The following practical considerations should be kept in mind when designing a hydrostatic density sensor loop:

1. The height of the liquid column detected has to be kept within practical limits.
2. The pressure differential generated due to density variations must be sufficient to match the range of the d/p cell.
3. The elevation (or depression) requirements of the installation must be within the capabilities of the selected d/p cell.

If the above requirements conflict with each other, the method for selecting the best compromise can be illustrated by an example.

Design Example

Assume that the tank contains a slurry and therefore an extended-diaphragm-type d/p cell (Figure 3.6a) has to be used. This type of d/p cell has a minimum differential range of 20 in. (0.5 m) H_2O and a maximum depression of 250 in. (6.35 m) H_2O. Let us also assume that the specific gravity is to be measured between 0.65 and 0.70 SG, and the specific gravity of the filling fluid in the wet leg is 1.20 SG.

Based on the above data, we will first calculate the minimum height (H) of the required fluid column and the required zero elevation or range depression of the d/p cell:

$$H = \frac{\text{span}}{(SG_{max} - SG_{min})} = \frac{20}{0.05} = 400'' = 33.4 \text{ ft (or } 10.16 \text{ m)} \qquad \textbf{6.4(2)}$$

$$\text{Zero elevation} = \text{Range depression} = H(SG_w - SG_{min})$$
$$= 400(1.20 - 0.65) = 18.4 \text{ ft } H_2O \text{ (or } 5.6 \text{ m)} \qquad \textbf{6.4(3)}$$

Table 6.4g provides some data on the span, suppression (depression), and elevation capabilities of one manufacturer's d/p cells. These values change with both the manufacturer and with the age of the instrument (Table 6.4h). Therefore, when making a specific selection, such as in the example here, it is necessary to check the capabilities of the selected hardware.

The combination of a 20 in. (0.51 m) span and a 220 in. (5.6 m) range depression is available in the d/p cell category shown in Table 6.4h, but is not available in the d/p cell designs described in Table 6.4g. Therefore, if one wants to use the d/p cell represented by Table 6.4g, the d/p cell pressure taps must be reversed, turning its high pressure side toward the wet leg. Such reversals are perfectly acceptable when using conventional d/p cells, but are usually unacceptable with the extended diaphragm design.

TABLE 6.4g
d/p Cell Capsule Capabilities

	Low Range	*Medium Range*	*High Range*
Minimum Span—in. H_2O	0–2	0–25	0–30 PSID
Minimum Span—kPa	0–0.5	0–6.2	0–210
Maximum Span—in. H_2O	0–150	0–1000	0–3000 PSID
Maximum Span—kPa	0–37.5	0–250	0–207 bars
Maximum Zero Suppression (also called range "elevation")	(Maximum span) – (Calibrated span)		
Maximum Zero Elevation (also called range "suppression" or "depression")	Minimum span		

TABLE 6.4h
The Span, Elevation, and Depression Capabilities of Older d/p Cell Designs (1 in. = 25.4 mm)

d/p Cell Type	*Min. Range (in. H_2O)*	*Max. Range (in. H_2O)*	*Max. Range Elevation (in. H_2O)*	*Max. Range Depression (in. H_2O)*
Low	0–5	0–25	50–(Range)	50
Medium	0–20	0–250	250–(Range)	250
High	0–200	0–850	850–(Range)	850

Narrow Spans

To detect narrow density spans using conventional d/p cells, tall standpipes are required. If low-range d/p detectors can be used, the column height can be reduced correspondingly. However when the process fluid is not compatible with low-range d/p cell designs, the only alternate choice is to consider some other method of density detection. For these reasons, hydrostatic densitometers are not practical for specific gravity spans under 0.05.

Temperature Compensation

Temperature compensation is not a standard feature in hydrostatic head type density detectors. It can be provided by the addition of temperature sensors and computing components, but it is required only if high precision measurement accuracy is desired. As shown in Figure 6.4i, the amount of density change resulting from near-ambient temperature variations is relatively small for most liquids.

CONCLUSIONS

The choice of d/p cell designs for density measurement should be based on the same considerations discussed in connection with level sensors (see Figures 3.6h to 3.6k).

© 2003 by Béla Lipták

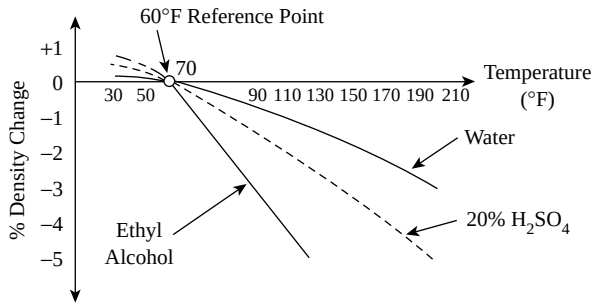

FIG. 6.4i
Density change as a function of near-ambient temperature variations.

Bubblers or purging of the pressure taps should only be considered for open tank applications. Whenever a pressure tap is purged, the speed of response of the density sensor will be slow due to the volume of the purge system. This reduced response speed will in turn degrade the performance of closed density control loops. In addition, due to the many mechanical components of purging systems, frequent maintenance will be required, and without frequent recalibration, the measurement accuracy will also suffer.

Pressure repeaters contribute an error component to the total inaccuracy of the measurement. On vacuum service, they also require an independent vacuum source or biasing of the repeater signal. These considerations place additional restrictions on the achievable density spans and required tank depths.

In hydrostatic head density loops, the force balance d/p cells are the most reliable. When the process fluid is viscous, dirty, or a slurry, the extended-diaphragm type design should be selected.

The main limitation of d/p type density measurement is the maximum available height of the hydrostatic liquid column. Other limitations involve the minimum spans and maximum depressions and elevations of the different d/p cell designs.

Bibliography

Berto, F.J., "Hydrostatic Tank Gages Accurately Measure Mass, Volume, and Level," *Oil and Gas Journal*, May 14, 1990.

Blickley, G.J., "Tank Gaging Transmitter Performs More Functions," *Control Engineering*, August 1991.

Capano, D., "The Ways and Means of Density," *InTech*, November 2000.

Early, P., "Solving Old Tank Gauging Problems with the New Hydrostatic Tank Gauging Technology," in *Advances in Instrumentation*, Vol. 42, Research Triangle Park, NC: Instrumentation, Systems, and Automation Society, 1987, pp. 143–153.

Fischer & Porter Co., Bulletin 91–14–02, "Measurement of Liquid Density and Specific Gravity," Warminster, PA, latest edition.

The Foxboro Company Technical Information Brochure TI-1-50a, "Density Measurement Methods for Liquids and Liquid Slurries," Foxboro, MA.

Gupta, S.V., *Practical Density Measurement and Hydrometry*, Bristol, U.K.: Institute of Physics, 2002.

Honeywell Instrumentation Data Sheet #10.14–3a, "Continuous Measurement and Control of Density," Morristown, NJ, latest edition.

Lanini, L. and Schneider, L., "The Dawn of a New Tank Gauging System," in *Advances in Instrumentation*, Vol. 42, Research Triangle Park, NC: Instrumentation, Systems, and Automation Society, 1987, pp. 155–161.

Lawford, V.N., "Differential Pressure Instruments: The Universal Measurement Tools," *Instrumentation Technology*, December 1974.

Mascone, C., "New Gauging System Wins Measure of Approval," *Chemical Engineering*, September 14, 1987, pp. 25–29.

Piccone, R.P., "Combining Technologies to Compute Tank Inventor," *Sensors*, October 1988.

Rowe, J.D., "Hydrostatic Tank Gaging Systems Set Inventory Accuracy Standards," *Instrumentation and Control Systems*, February 1987.

Slomiana, M., "Using Differential Pressure Sensors for Level, Density, Interface, and Viscosity Measurements," *Instrumentation Technology*, September 1979.

"Specific Gravity Recorder-Controller," Honeywell Instrumentation Data Sheet #10.14-lb, latest edition.

"Standard Practice for Calibration of Transmission Densitometers," *ASTM Standard*, 1998.

Waterbury, R.C., "Transmitter Keys Hydrostatic Gauging," *InTech*, July 1990.

© 2003 by Béla Lipták

6.5 Oscillating Coriolis Densitometer (Gas, Liquid, and Slurry Services)

C. H. HOEPPNER (1982) **C. APPLE** (1995) **J. E. JAMISON** (2003)

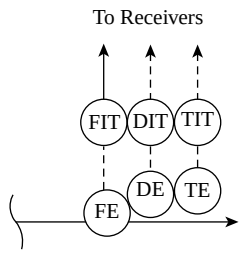

Flow Sheet Symbol

Density Range:	0.0 to 5.0 g/cm^3 (0 to 5000 kg/m^3); can also measure mass flow, volumetric flow, and temperature
Sizes (Diameter):	1/25 to 10 in. (1 to 250 mm)
Flow Range:	0 to 63,000 lb/min (0 to 28,300 kg/min)
Fluids:	Liquids, slurries, compressed gases, liquified gases (not suited for gas-liquid mixtures)
Output Signal:	Linear frequency, analog, digital serial protocols, display, Highway Addressable Remote Transducer (HART), Profibus, Foundation Fieldbus, Modbus, scaled pulse, display, alarm outputs, manufacturer specified protocols.
Detector Types:	Electromagnetic, optical, and capacitive
Operating Pressure:	Depends upon tube size and flange rating; 1400 PSIG (100 bars) is the typical standard; 5000 PSIG (345 bars) is a typical high pressure. At 650°F temperature, the maximum operating pressure is 1160 PSIG (80 bars).
Required Pressure Drop:	From under 10 PSIG (0.7 bar) to over 100 PSIG (6.9 bars)
Operating Temperature:	Depends upon design: –400 to 400°F (–240 to 204°C) is the standard rating; 32 to 800°F (0 to 426°C) is the rating of high temperature units. Special low temperature designs can also be used on cryogenic applications from –40 to 140°F (–40 to 60°C). Temperature ratings can be affected by hazardous area classification.
Materials of Construction:	304/316L/316 Stainless steels, high alloy Ferritic Stainless 17-7PH, Hastelloy C, titanium, Ni-Span C as standard; tantalum, zirconium, Tefzel-lined as special
Inaccuracy:	±0.0002 to 0.05 g/cc, depending upon design; typical is ±0.002 g/cm^3 over a 0.3- to 3.0-g/cm^3 range
Repeatability:	±0.0001 to 0.01 g/cm^3, depending upon design; typical is ±0.001 g/cm^3 over a 0.3- to 3.0-g/cm^3 range.
Digital Communications:	Most manufacturers provide electronics, which are equipped with digital communications that support RS232/RS422 or RS485 physical interfaces and/or protocols such as ModBus. Other electronic transmitters support a variety of other digital communications protocols such as HART as well as FOUNDATION Fieldbus, DeviceNet, and Profibus-PA/DP.
Costs:	1/25th in. (1.0 mm), $5000; typical 1 in. (25 mm) meter, with full-scale flow rate of 400 to 1000 lb/min (180 to 450 kg/min), $7000; typical 3 in. (75 mm) meter, with full-scale flow rate and FOUNDATION Fieldbus transmitter, with full-scale flow of 9800 to 39,500 lb/h (4500 to 18,000 kg/h), $13,500; 6 in. (150 mm), $27,500.

© 2003 by Béla Lipták

Partial List of Suppliers:

ABB Inc. (www.abb.com)
Bopp & Reuther (www.burhm.com)
Brooks Instrument, a Unit of Emerson Process Management (www.emersonprocess.com/brooks)
Danfoss A/S (Denmark) (www.danfoss.com)
Endress & Hauser Inc. (www.us.endress.com)
Fischer and Porter, a Unit of ABB (www.us.abb.com)
Foxboro-Invensys (www.foxboro.com)
Heinrichs GmbH & Co. (www.heinrichs-mt.com)
Krohne (www.krohne.com)
Micro Motion Inc., a Unit of Emerson Process Management (www.emersonprocess.com/micromotion)
Oval (www.oval.co.jp)
Rheonik (www.rheonik.de)
Schlumberger Industries (www.slb.com)
Smith Meter Inc. (www.fmcenergysystems.com)
Yokogawa (www.yokogawa.com)

INTRODUCTION

It requires the least amount of energy to cause an object to go into natural frequency vibration. This frequency is a function of the mass of the object. In case of a Coriolis densitometer, the mass of the vibrating object is the sum of the pipe, the fluid within the pipe, and the mass of the driver and sensors (Figure 6.5a). Therefore, since the masses of the pipe, driver, and sensors are constant, a change in natural frequency is a direct indication of a change in the density of the process fluid.

A unique feature of the Coriolis flowmeter is its ability to determine, in addition to its flow rate, the density of the process fluid. This ability can be used even when the measurement of the fluid flow rate is of no interest. The density measurement requires the main components illustrated in Figure 6.5a.

THE SENSOR

One design of a Coriolis densitometer is shown in Figure 6.5b. This density sensor is comprised of either one or two flow tubes (usually two), a driving mechanism for oscillating the flow tubes, detectors for the measurement of natural frequency, and a temperature-measuring device.

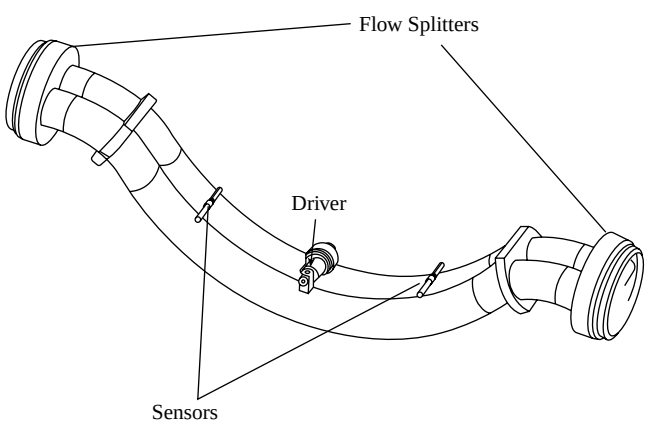

FIG. 6.5a
The components and the tube assembly of a Coriolis meter.

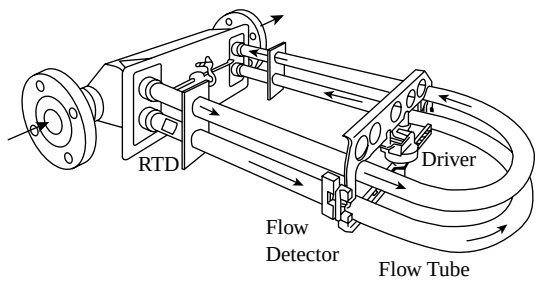

FIG. 6.5b
Design of a typical Coriolis density meter.

The process fluid stream is split into two and flows through the flow tubes. A coil-and-magnet driver is used to oscillate the flow tubes in opposition at their natural frequency. The oscillation of the tubes causes the flow detectors to output a sinusoidal voltage signal that reflects this motion. The frequency of the sinusoidal voltage from the flow detectors represents the natural frequency of the tube vibration. Typically, the flow detectors are electromagnetic sensors, although capacity detectors and optical sensors are also used.

Changes in the density of the process fluid will cause the mass of the fluid-filled flow tube system to change. This in turn will change the natural frequency of the sensor. This change will cause the frequency of the sinusoidal voltage from the flow detectors to change. By measuring the frequency of the sinusoidal voltage developed by the Coriolis detector, the density of the process fluid is determined.

Temperature Correction

The temperature of the tube affects its natural frequency of vibration. If the tube temperature increases, the tube becomes more elastic, which causes the natural frequency to decrease

© 2003 by Béla Lipták

even though the mass of the system has not changed. The measurement of the tube's temperature is used to correct the natural frequency for changes in the elastic modulus of the flow tube material. A resistance temperature detector is typically used to measure the tube temperature.

THEORY OF OPERATION

The natural frequency of vibration is described by the equation:

$$\omega_n = \sqrt{\frac{k}{m}} \qquad \textbf{6.5(1)}$$

where

ω_n = natural frequency, rad/s
k = spring constant, pound-force/in. or lb/s^2 (N/m or kg/s^2)
m = mass of the system, lb (kg)

For the Coriolis meter, the mass of the system is the combined mass of the fluid and the flow tube assembly and can be expressed by the following relationship:

$$m = \rho_f A_f l_t + \rho_t A_t l_t \qquad \textbf{6.5(2)}$$

where

ρ_f = fluid density, lb/in.^{3} (g/cc)
ρ_t = tube material density, lb/in.^{3} (g/cc)
A_f = tube internal area, in.^{2} (cm^2)
A_t = tube cross-sectional area, in.^{2} (cm^2)
l_t = tube length, in. (cm)

The spring constant (k), from Equation 6.5(1), is a function of geometry and material properties and is determined from the following equation:

$$k = \frac{MEI}{I_t^3} \qquad \textbf{6.5(3)}$$

where

M = modal constant
E = modulus of elasticity, pound-force/in.^{2} (kPa)
I = moment of inertia, in.^{4} (cm^4)

The natural frequency (ω_n), from Equation 6.5(1), can also be expressed by the following equivalent relationships:

$$\omega_n = 2\pi f = \frac{2\pi}{T} \qquad \textbf{6.5(4)}$$

where

f = oscillation frequency, cycles/s
T = tube period, s (time for one cycle of oscillation)

Substituting Equations 6.5(2), 6.5(3), and 6.5(4) into Equation 6.5(1) and solving for ρ_f gives the following relationships:

$$\rho_f = \left(\frac{MEI}{4\pi^2 l_t^4 A_f}\right) T^2 - \frac{\rho_t A_t}{A_f} \qquad \textbf{6.5(5)}$$

The Calibration Constant

The variables that depend upon the tube geometry and materials properties can be combined to obtain the calibration constants, such as: $K_1 = (MI)/4\pi^2 l_t^4 A_f$ and $K_2 = (\rho_t A_t)/A_f$. A correction factor C_T is used to compensate for changes in the material modulus of elasticity (E) with temperature. Equation 6.5(5) can then be rewritten as:

$$\rho_f = K_1 C_T T^2 - K_2 \qquad \textbf{6.5(6)}$$

Values for the calibration constants are determined by measuring the period of oscillation of the tube at two known fluid densities. With the two fluid densities and their respective tube periods, two simultaneous equations with two unknowns can be solved to obtain K_1 and K_2. Any two fluids of known density can be used to determine the calibration constant.

Calibration fluids should be so selected as to have sufficiently different densities to minimize the amount of error associated with the calibration constants K_1 and K_2. Air and water are commonly used as the calibration fluids. The value of C_T depends upon the material of the flow tube and is determined by the manufacturer from experimental data.

ELECTRONICS

A typical block diagram of the density measurement electronics is shown in Figure 6.5c. The electronics is comprised of interfaces to the sensor, signal-processing components, and outputs to external devices. The interfaces between the sensor and the electronics include the flow detectors, the drive mechanism, and the temperature detector.

The electronics vibrates the tubes at their natural frequency by minimizing the amount of energy input into the driver while maintaining sufficient tube displacement to produce the forces required to measure the fluid flow rate. The electronics applies an alternating current to the drive coil that is mounted on one of the flow tubes. This alternating current generates an alternating magnetic field in the coil. The alternating magnetic field causes the fixed magnet mounted on the other tube to be repelled and attracted, forcing the tubes alternately away from and toward one another at their natural frequency. The flow detectors generate a sinusoidal voltage signal that reflects the oscillation of the flow tubes.

© 2003 by Béla Lipták

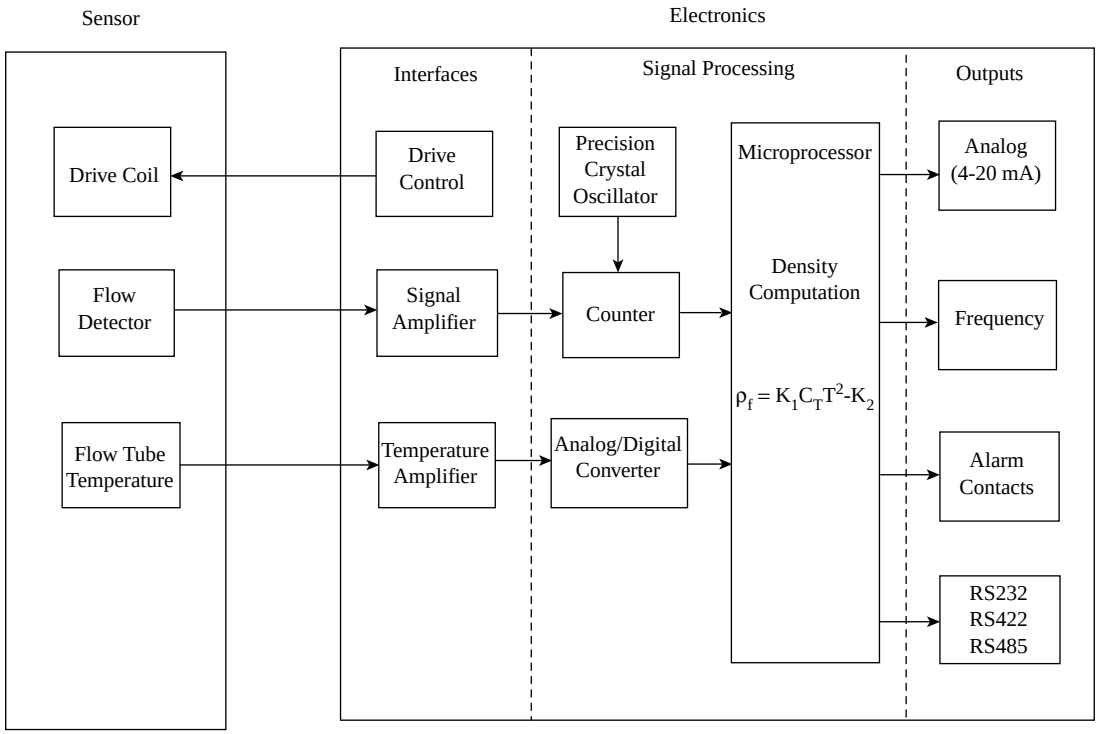

FIG. 6.5c
Signal processing block diagram.

The sinusoidal voltage signal from one of the flow detectors is input into a counter that detects the start and end of each tube cycle. The tube cycles are gated by the counter, which triggers the counter to make a time measurement over the duration of the tube cycle. The time or period over which the tube cycle occurred is obtained from a precision crystal oscillator. The microprocessor reads the counter time measurement and uses this value along with the tube temperature and calibration constants, K_1 and K_2, to calculate the fluid density using Equation 6.5(6).

Output Options

Electronics are available to provide several different output options. The most common output is an analog (4 to 20 mA) output, which can be scaled to represent the desired density range. Some manufacturers provide a scalable frequency output that can also be used to represent the fluid density. Many of the meters are equipped with built-in displays that can be used to directly display the density of the process fluid (or any other process variable acquired by the meter including volumetric flow, mass flow, temperature, and total flow). The user can select a variety of units for the density display, such as g/cc, lb/ft^3, °API, °Baumé, etc.

Most manufacturers provide electronics that are equipped with digital communications that support RS232/RS422 or RS485 physical interfaces and/or protocols such as ModBus. Other electronic transmitters support a variety of other digital communications protocols, such as Highway Addressable Remote Transducer (HART), as well as FOUNDATION Fieldbus, DeviceNet, and Profibus-PA/DP. The latter two can provide high-speed transmission of all sensor process variables back to the host distributed control system (DCS) for display and/or control purposes.

A density output is occasionally optional on some devices. A typical Coriolis flowmeter comes standard with one pulse or frequency output that usually represents flow rate and another output that can represent density. Two analog outputs can be configurable for a choice of flow rate, density, or temperature; a local display can be purchased which is independent of the other outputs. Digital discrete outputs are also normally standard issue including alarm outputs. Several data communications options are available including basic RS-232/422/485 physical links, ModBus, and HART. Other optional multivariable transmitters can provide fieldbus serial digital data communication outputs such as FOUNDATION Fieldbus, DeviceNet, and Profibus-PA/DP, and can send many process variables (flow rate [mass or volumetric], density, temperature, and flow total) back to a host DCS. The number and type of outputs, both standard and optional, vary from one manufacturer to another.

APPLICATIONS

A Coriolis meter can measure the density and the flow rate of a wide variety of process fluids. In addition to indicating density, the electronics can be configured to provide additional information such as the concentration of one or more components in a mixture.

© 2003 by Béla Lipták

Microprocessors can be programmed to determine the composition of mixtures. Common options that are provided allow for the determination and monitoring of % solids by mass or volume, °Brix, % fructose, % alcohol, and % solids in black liquor. Many of these relationships are temperature-dependent, and the temperature reading from the flow tube is used to correct for the variations in fluid temperature.

Since the flow rate is measured by the Coriolis meter, the net flow rate of one or more components in a multicomponent mixture can also be determined. An example of this is the ability to determine the flow rate of oil in an oil-water emulsion.

DEVELOPMENTS AND TRENDS

In addition to monitoring several variables, the newer systems allow the transfer of calibration and diagnostic related information to and from the host DCS. Some Coriolis meters not only support the use of many different density units, such as °Baume, °Balling, °Plato, but are also able to convert their readings into specialized units as required by the particular industry. For example, in the hydraulic well fracturing process of the oil and gas industry, the sand added per cubic meter of liquid can be monitored.

Two- and three-dimensional polynomial calculations can yield relationships between concentration and reference density or can correlate relationships between concentration, density, and temperature.

The Coriolis electronics can support up to four detector assemblies and can provide high precision under widely variable operating conditions. For example, it can detect the density within an error of ±0.0005 g/cm^3 over a range of 0.001 to 1.8 g/cm^3, while the temperature varies from 5 to 80°C.

The Coriolis meter is a multivariable sensor. It is hoped that in the future it might become capable of measuring even more variables, possibly including viscosity.

Bibliography

Babb, M., "New Coriolis Meter Cuts Pressure Drop in Half," *Control Engineering*, October 1991.

Babb, M., "New Mass Flowmeter Design Claims Improved Reliability," *Control Engineering*, May 1990.

Benabdelkarim, M. and Galiana, C., "Non-Radioactive Densitometer for Continuous Monitoring of Cement Mixing Process," in *Proceedings of the First International Conference on Health, Safety, and Environment in Oil and Gas Exploration & Production*, Part 1of 2, Richardson, TX: Society of Petroleum Engineers, November 1991.

Berkowitz, P.N. and Hardin, M.B., "Mass Flow and Density Sensor Tightens Control of Alumina Extraction," *Instruments and Control Systems*, December 1991.

Blickley, G.J., "Mass Flow Measurement Aided by Coriolis Methods," *Control Engineering*, April 1991.

Blickley, G.J., "Tank Gauging Transmitter Performs More Functions," *Control Engineering*, August 1991.

Blumenthal, J., "Direct Mass Flow Rate and/or Density Monitoring using Coriolis/Gyroscopic Sensor Base," in *TAPPI Proceedings: 1985 Papermakers Conference*, 1985.

Blumenthal, J., "Simultaneous Direct Mass Flow and Density Monitoring," Annual Meeting: Technical Section, Canadian Pulp and Paper Association, 72nd Annual Meeting CPPA, Montreal, 1986.

Bugher, G., "Coriolis Flowmeters," *Measurements and Control*, September 1990.

Capano, D., "The Ways and Means of Density," *InTech*, November 2000.

Corser, G.A. and Hammond, G.C., "A Combined Effects Meter," *InTech*, April, 1993.

Cheesewright, R., Clark, C., and Bisset, D., The Identification of External Factors Which Influence the Calibration of Coriolis Mass Flowmeters," *Flow Measurement Instruments*, Vol. 11, 2000, pp. 1–10.

Eibl, C., "Is Mass Flow Measurement Increasing Too Rapidly?" *Measurements and Control*, September 1990.

Eide, J.M. and Gwaspari, S.C., Comparison test and calibration of Coriolis meters, North Sea Flow Measurement Workshop, Peebles, Scotland, 1996.

"Flowmeter Measures Mass of Fluid Motion," *Chemical Processing*, November 1982.

Ginesi, D. and Annarummo, C. Application and installation guidelines for volumetric and mass flowmeters, *ISA Transactions*, Vol. 33, No. 1, 1994, pp. 61–72.

Ginesi, D., "Flow: A Performance Review," *Chemical Engineering*, June 22, 1987.

Gordon, I., "Vibrating Element Technology for Measuring Liquid Density in Process Applications," ACHEMA, Frankfurt 2000.

Gupta, S.V., "Practical Density Measurement and Hydrometry," Bristol, U.K.: Institute of Physics, 2002.

Hall, J., "Coriolis Mass Flowmeter Reduces Pressure Loss," *Instrumentation and Control Systems*, October 1989.

Hall, R., "Measuring Mass Flow and Density with Coriolis Meters," *InTech*, Vol. 37, No. 4, April 1990.

Heinonen, E.W. and Tapscott, R.E., "Secondary Properties of Aqueous Lithium Bromide Solutions," *ASHRAE Transactions*, Vol. 105 (Part 1) 1999.

Kalotay, P., "Density and Viscosity Monitoring Systems Using Coriolis Flow Meters," *ISA Transactions*, Vol. 38 No. 4, 1999.

Keita, N.M., Behaviour of Straight Type Coriolis Mass Flowmeters in the Metering of Gas: Theoretical Predictions with Experimental Verifications, *Flow Measurement Instruments*, Vol. 5, 1994, pp. 289–294.

Kolahi, K., Gast, T.H., and Rock, H., Coriolis Mass Flow Measurements of Gas Under Normal Conditions, *Flow Measurement Instruments*, Vol. 5, 1994, pp. 275–283.

Kotnik, P., et al., "Accurate Fluid Density Measurement Using Oscillating Type Density Meters Under Rapid Temperature Variations," ACHEMA, Frankfurt 2000.

"Mass Flow Control Ups Polyurethane Production," *Instruments and Control Systems*, December 1981.

Menke, D., Use of Coriolis Mass Flowmeters in Custody Transfer, *FLOMEKO '96 8th Int. Conf. On Flow Measurement*, Beijing, China, 1996, pp. 232–237.

Plache, K., "Coriolis/Gyroscopic Flow Meter," *Mechanical Engineering*, March 1979.

Robinson, C., "Obstructionless Flowmeters," *InTech*, December 1986.

Schietinger, M., "Mass Flow vs. Volumetric Flow," *Measurements and Control*, September 1990.

"Standard Practice for Calibration of Transmission Densitometers," *ASTM Standard*, 1998.

Valentine, J. and Duffill, R., "Coriolis Meters Used To Measure Density-Related Physical Properties," in *Annual ISA Analysis Division Symposium-Proceedings*, Vol. 33, Research Triangle Park, NC: Instrumentation, Systems, and Automation Society, 2000.

© 2003 by Béla Lipták

6.6 Radiation Densitometers

C. H. HOEPPNER (1982) **B. G. LIPTÁK** (1969, 1995, 2003),
REVIEWED BY A. J. LIVINGSTON (1995, 2003)

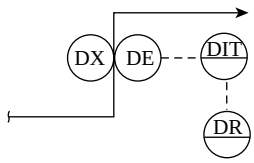

Flow Sheet Symbol

Applications:	Noncontact and nonintrusive density measurement of liquids and solids.
Radiation Sources:	The most commonly used radioisotope is cesium 137, because it decays more slowly (30 years half life). Cobalt 60 is selected when the tank/pipe walls are thick (5.3 years half life). Americum 241 (455 years half life) and radium (1602 years half life) are less frequently used.
Source Sizes:	For external types, generally a few hundred millicuries (mCi) or less. For low level applications: from 0.1 to 2 mCi. For normal applications: from 5 to 2,000 mCi with 10,000 mCi being the maximum. A curie equals 3.7×10^{10} disintegrations/s and is generated by 1 g of radium, 0.88 mg of cobalt, or 11.5 mg of cesium.
Process Pressure:	Unlimited; sensor is external to pipe.
Ambient Temperature:	External detectors are suitable for –40 to 160°F (–40 to 71°C) ambient conditions. Heaters or coolers are available for ambient temperatures outside these limits.
Materials of Construction:	Detector is normally carbon steel or aluminum; other parts are optional.
Inaccuracy:	1% of actual span
Limitations:	Errors caused by entrained air, deposits on pipe wall and stratification. The detector requires a 5% change in the detected radiation intensity as the process density changes from minimum to maximum. Therefore, when detecting narrow spans, compensation is needed for source decay and process temperature. The source decay effect with cesium 137 is 3% per year. A minimum of 6 in. (150 mm) radiation path length is required.
Range (Span):	From 0.3 to 3.0 SG
Applicable to Pipe Sizes:	2 to 30 in. (51 to 762 mm) diameter
Radiation Intensity:	Generally under 5 mR/h at 12 in. (0.3 m) from instrument
Allowable Radiation Dose:	One roentgen is received during a period of 1 h, if spent within 1 m of a 1 Ci radiation source. One receives a dose of 1 rem (roentgen equivalent man), when exposed to one roentgen in any period of time. Allowable limits for the general public are 2 mrem/h, 100 mrem/year. The allowable dose for occupational worker is 5000 mrems/year (see Table 6.6d).
Costs:	A clamp-on unit for a 6 in. (150 mm) pipe with 0.28 in. (7 mm) wall and 1 in. (25 mm) fiberglass insulation, for 80 to 120°F (27 to 49°C) ambient temperature and a range of 1.0 to 1.25 SG, cost from $ 7000 to $ 8000. For a 20 in. (0.508 m) pipe, the same unit costs from $ 12,000 to $ 14,000.
Partial List of Suppliers:	Barton Instrument Systems LLC (www.barton-instruments.com) Bedford Control Systems Inc. (x-ray)

© 2003 by Béla Lipták

Berthold Industrial Systems Inc. (www.berthold.com.au)
Endress + Hauser Inc. (www.us.endress.com)
Flow-Tech Inc. (www.flowtechonline.com)
Ohmartvega Corp. (www.ohmartvega.com)
Ronan Engineering Co. (www.ronanmeasure.com)
Thermo MeasurTech (www.thermomt.com)

INTRODUCTION

Radiation is caused by the spontaneous disintegration of the nucleus of an atom. Wilhelm Roentgen discovered x-rays in 1895, while radioactivity as such was discovered by Antoine-Henri Becquerel in 1896. The three forms of radiation are alpha (the emitted particle is the nucleus of helium and travels only a few centimeters in air), beta (electrons are emitted that can travel a few meters in air), and gamma. Gamma radiation consists of high-energy electromagnetic waves that can travel a couple of hundred meters in air.

The range in source sizes for density measurement applications has been lowered in recent years. This occurred partly because of changing regulations and partly because the high sensitivity sodium iodide detectors have been developed. These new detectors allow for the use of reduced (down to 0.1 mCi) source sizes, because the sodium iodide crystal detectors are larger and more stable than their predecessors.

Such density gauges are permitted under a General License, which requires no fees, no wipe tests, and no shutter check, and allows the user to do the initial start-up. These features reduce the overall cost of ownership.

Radioisotopes

The emitters of gamma radiation and their half-lives in years are listed in Table 6.6a. The size of a radiation source is expressed in millicuries (mCi). One millicurie is defined as 37 million disintegrations. The range of source sizes for level and density applications generally ranges from 5 to 10,000 mCi. The most commonly used isotope is cesium 137. Due to its half-life, the activity of a 100-mCi cesium source will be 50 mCi after 30 years and 25 mCi after 60 years.

TABLE 6.6a
Half Lives of Radioisotopes

Isotope	*Half-Life in Years*
Americum (Am 241)	455.0
Cesium (Cs 137)	30.0
Cobalt (Co 60)	5.3
Radium (Ra 226)	1602.0

The strength of the radiation field is measured in milliroentgens (mR). In a 1-mR radiation field, 2.08 million pairs of ions are produced in a cubic centimeter of air. The intensity of the radiation field is a function of the size (activity) of the source, the distance from the source (Figure 6.6b), and the material that the radiation has to pass through. The higher the density of a material, the more radiation it is likely to absorb. Table 6.6c lists the half-value thicknesses (H) and specific gravities (SG) of some common industrial materials when exposed to radiation generated by Cs137. H is the thickness of a material necessary to reduce incident radiation by 50%.

The amount of radiation exposure received (dose) by an operator is expressed in roentgen equivalent man (rem) units.

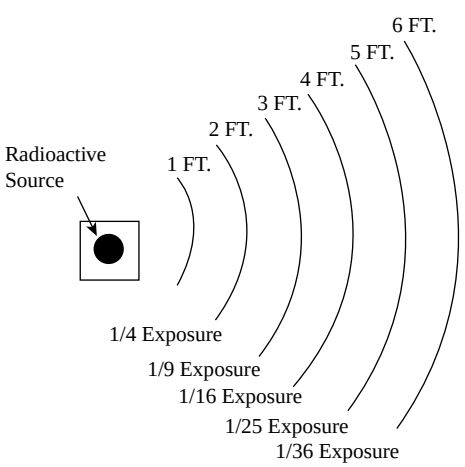

$$D = 1000 \frac{K\ mCi}{d^2}$$

Where

D = intensity, mr/hr,
mCi = size of source in millicuries,
d = distance to source in inches, and
K= constant, 1.3 for Ra 226
0.6 for Cs 137
2.0 for Co 60.

FIG. 6.6b
Radiation intensity and therefore exposure drops with the square of distance to the radiation source.

© 2003 by Béla Lipták

TABLE 6.6c
Half-Value Thickness of Materials When Exposed to Radiation from a Cs 137 Source

Material	Specific Gravity	Half-Value H	
		Inches	mm
0.5 SG bulk material	0.5	7.87	200
Water	1.0	3.9	99
Al_2O_3 refractory	2.25	1.77	45
Aluminum	2.7	1.5	38
Steel	7.86	0.6	15.2
Copper	8.96	0.47	11.9
Lead	11.4	0.25	6.35

TABLE 6.6d
Radiation Exposure Limits in Millirems (mrem)

Exposure Period	General Public	Occupational Workers
Hour	2	
Quarter		1250
Year	100	5000

A rem is the dose received when an operator is exposed to a radiation field of 1 R. In most countries, the radiation dose limit in the workplace is 1250 mrem/calendar quarter, 100 mrem/week, or 2.0 mrem/hr. See Table 6.6d for a more complete set of data.

THE RADIATION DENSITOMETER

The basic components of the density gauge comprise a radioactive source beaming through a pipe and a detector system to measure the amount of transmitted radiation (Figure 6.6e).

When gamma rays pass through a process fluid, they are absorbed in proportion to the density of the process material (see Figure 6.6f). An increase in process density results in a reduced output current because a denser process fluid absorbs more of the gamma rays.

When the density inside large pipes (or containers) is measured, the radiation source and detector would be mounted as illustrated on Figure 6.6e. In a smaller diameter pipe (under 6 in., or 150 mm) the radiation path is not adequate to provide high accuracy and sensitivity. Therefore, the *Z* installation shown on the right side of Figure 6.6f would be used. This method of mounting lengthens the radiation path and consequently increases accuracy.

Radiation Source

For the majority of density measurement applications, cesium 137 is used as the radioisotope. Source sizes normally vary between 200 and 2000 mCi as a function of pipe diameter and specific gravity span. Gauge sensitivity is increased by

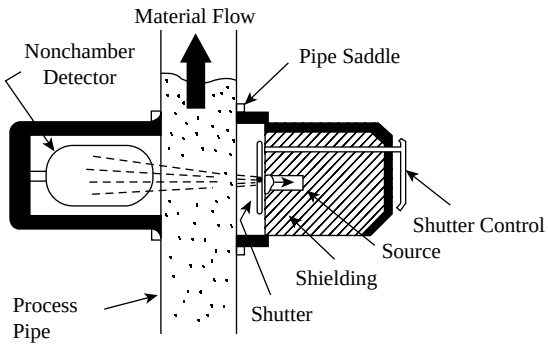

FIG. 6.6e
The gamma source is housed in a lead-shielded holder. When the shutter mechanism is opened, a collimated gamma beam passes through the pipe wall and the process material inside; its intensity at the detector is interpreted into process density.

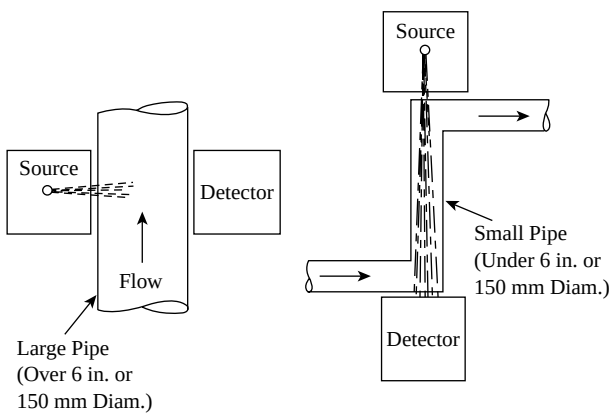

FIG. 6.6f
Radiation density sensors.

the use of the collimated (narrow) beam geometry, which restricts radiation in all directions except for a direct path to the detector. This minimizes scatter and permits the use of larger sources with increased measurement sensitivity.

Most designs are such that the radiation intensity at one foot from the gauge surface in any direction will not exceed 5 mR/h. This is a safe value for any process area where the operator's occupancy is 20 hours or less per week.

The source holder is provided with a shutter mechanism to close the radiation beam port during installation. Available shutter features include the fail-safe design, which automatically closes the shutter whenever power fails; the shutter switch, which permits remote light display of shutter position; and the remote shutter control, which allows closing the radiation beam from a central control board.

Radiation Detectors

There are three basic types of gamma ray detectors: the Geiger tube, the ionization chamber, and the scintillation crystal/photomultipler tube detector.

© 2003 by Béla Lipták



FIG. 6.6g
Actual installation of a densitometer.

Geiger Tubes The Geiger tube is a low-accuracy device that measures radiation through the ionization of a halogen gas at about 500 V DC potential.

Ionization Cells Ionization cells operate by the ionization of pressurized gas between two dissimilar metals under incident radiation, generating a low current signal (10^{-10} A). For density gauging, the ionization chambers are used almost without exception (Figure 6.6g). They require stable amplification, but when this is provided they supply simple, accurate, and reliable measurements.

Scintillation Detectors The scintillation detector senses the light photons resulting from gamma rays incident on certain crystal materials. This is the most sensitive but least stable detector. It is particularly affected by variations in environmental conditions such as temperature.

Temperature Control and Calibration It is desirable to heat and thermostatically control the detector chamber to eliminate temperature variation and moisture condensation problems. The process temperature is of no consequence, but it is necessary to use thermal insulation between cell and process, so that detector temperature will not rise above 140°F (60°C).

Calibration checks for both zero and span can be performed by the use of equivalent absorbers. These absorbers are accurately made for the specific measurement and are inserted between source and detector with the pipe empty.

Periodic recalibration is necessary to overcome the effects of source aging and material buildup on the walls. If zeroing and calibration is to be done in place using air and some known density calibration liquid, it is necessary to install a calibration fluid sample valve near (usually below) a densitometer that is mounted in a vertical pipe.

Amplifier and Power Supply

Amplifiers are available in both digital and DC designs. Economics favor the DC design, while the digital amplifier guarantees better accuracy and less drift. The DC amplifier needs weekly or bimonthly standardization, while the solid-state, digital unit requires less frequent standardization.

Span and Error The minimum full-scale span is about 0.05 specific gravity units with a corresponding accuracy of 0.0005 SG or better. When measuring small spans, the zero drift due to source decay becomes an important consideration. The source decay compensator unit is a must for such installations. For wider ranges, it is essential only if the source is cobalt 60. The source decay effect with cesium 137 is only 3%/year.

Densitometers for applications involving process materials with high temperature expansion coefficients are provided with temperature compensation if variations in process temperature are expected.

The output signal from the detector to the amplifier is in digital pulses. Therefore, the signal should be protected by the use of two-wire, shielded cable. The maximum distance between detector and amplifier is about 5000 ft (1500 m), but should be made shorter whenever possible.

BETA RADIATION DENSITOMETERS

Beta-ray absorption has been successfully used in cryogenic density applications. The source in this unit is strontium-90 and the receiver is a silicon surface-barrier detector.

The system counts the number of beta particles that strike the detector with an energy greater than the discrimination level.

The source and receiver are packaged in a small, light, corrosion-resistant probe. In addition to detecting density, it can be used for level and other measurements.

X-RAY DENSITOMETERS

"Soft," low-energy x-rays have also been used in density measurement applications (Figure 6.6h). x-ray systems do not require lead shielding and produce passive radiation. This means that radiation stops when the power supply to the unit is turned off. In the example shown on Figure 6.6h, safety interlocks can be provided to turn off the power supply if the hopper is empty or when either the source or the detector is removed, or if the hopper access door is opened.

The excitation voltage is about 35,000 V, and the x-rays are collimated (focused) to a beam diameter of about 3 in. (76 mm) at the end of a 40 in. (1.01 m) path through air. The supplier claims that the instrument meets both the U.S. Federal Drug Administration's 1000 rad limit on radiation absorption of food and the 100 mrem/week limit of Occupational Safety and Health Administration on human exposure to radiation.

© 2003 by Béla Lipták

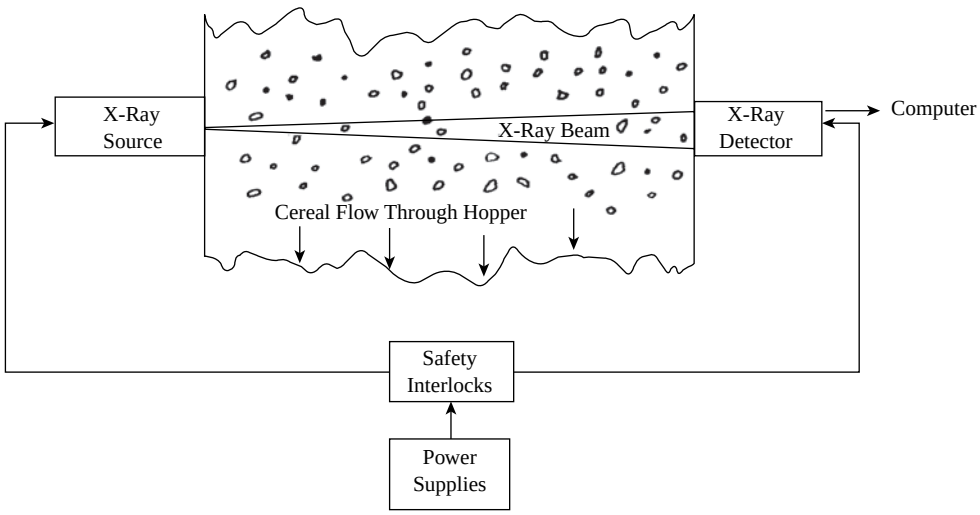

FIG. 6.6h
X-ray densitometer used on cereal hopper contents. (Courtesy of Bedford Control Systems Inc.)

LIMITATIONS

The main limitations of radiation densitometers include air entrainment, pipe wall deposits, source decay (about 3%/year for Cs 137), and stratification. Some of these problems can be minimized by installing the gauge in vertical upward flow with a positive head pressure at the location of the gauge. Other remedies include the use of glass or Teflon-lined pipes and the maintaining of a flow velocity of 5 ft/s (1.5 m/s) at the gauge. Frequent recalibration is also recommended.

Another limitation involves minimum spans, as the detector requires a 5% change in the detected radiation intensity as the process density changes from minimum to maximum. Therefore, on a 2-in. (50-mm) pipe, the minimum span is 0.2 SG, while on a 6-in. (150-mm) pipe or on a *Z* installation, the minimum span is 0.05 SG. Microprocessor-based densitometers can compensate for source decay and can also provide automatic temperature compensation (water density at 176°F [80°C] changes by 0.0005 SG/°C of temperature change).

CONCLUSIONS

For source sizing and licensing information, refer to Section 3.15. Where it is possible for the operator to get in the path of the radiation beam (when moving the gauge or when cleaning a tank), a Specific License must be obtained. In all other cases, a General License is sufficient.

The applications of radiation densitometers include the consistency control in such processes as lime kiln feeds, density measurements of sewage sludges, black and green liquors, food products, granular materials, and the detection of pipeline interfaces. While relatively high in cost, these density detectors, which have no moving parts and require no contact with the process, perform reliably on hard-to-handle (flammable, toxic, hot, corrosive, sticky, etc.) processes.

Bibliography

Boyes, W., "Non-contacting Density Instrumentation," Instrumentation, Systems, and Automation Society/93 Technical Conference, Chicago, September 19–24, 1993.

Capano, D., "The Ways and Means of Density," *InTech*, November 2000.

"Continuous Density Analyzer Records Sludge Concentration," *Wastes Engineering*, April 1959.

Cook, H.L., "Slurry Measurement and Control," *ISA Journal*, June 1964.

Haffner, J.W., "Radioisotopes for On-Stream Analysis," *ISA Journal*, May 1964.

Holzschuler, P., "Hazard Free Analysis," *Processing*, October 1989.

Livingston, A.J., "Density Measurement, Nuclear Gauge Measurement of Density," *Measurements and Control*, December 1990.

"Nuclear Disarmament," *Flow Control*, (www.flowcontrolnetwork.com), April/May 2000.

Paris, T. and Roede, J., "Back to Basics," *Control Engineering*, June 1999.

Smith, B.W., "Radioisotope Gauging in the Mining Industry," *The Canadian Mining and Metallurgical Bulletin*, January 1964.

"Standard Practice for Calibration of Transmission Densitometers," *ASTM Standard*, 1998.

U.S. Nuclear Regulatory Commission, "Working Safely With Nuclear Gauges," NUREG/BR-0133, latest edition, Washington, D.C.

© 2003 by Béla Lipták

6.7 Ultrasonic Sludge and Slurry Densitometers

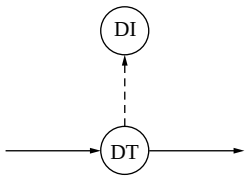

C. H. HOEPPNER (1982) **B. G. LIPTÁK** (1995, 2003)

Types:	Sonic and ultrasonic
Design Pressure:	10,000 PSIG (690 bars)
Design Temperature:	–20 to 390°F (–29 to 199°C)
Materials of Construction:	Stainless steel, Hastelloy, epoxy, titanium
Limitations:	Requires constant bulk modulus of elasticity and no gas bubbles in process fluid
Range:	0.5 to 1.5 SG. The range of ultrasonic sludge detectors is 0.1 to 20% (1000 to 200,000 mg/l).
Inaccuracy:	0.1% of span, or 1000 mg/l for ultrasonic sludge sensors
Cost:	Ultrasonic suspended solids monitors, $5000 to $6000
Partial List of Suppliers:	Agar Corp. Inc. (www.agarcorp.com) Delavan Process Instrumentation, an L&J Company (www.ljtechnologies.com) Markland Specialty Engineering Ltd. (www.sludgecontrols.com) Monitek (www.monitek.com) Sigrist (www.chemicals-technology.com) ThermoMeasureTech (www.thermi.com)

INTRODUCTION

Sludge and slurry densities can be detected by several methods, including radiation, sonic/ultrasonic, and optical. The radiation type densitometers have been described in the previous section and their main limitation is their high cost. The photometric densitometers are usually called turbidity analyzers and are described in Chapter 8. They are limited to low solids concentration applications, usually in the ppm range, and are not suited for use on thick slurries or sludges. This is because fouling, abrasion, and coating by slime, scale, or grease would interfere with their operation.

For these reasons, the most popular sludge densitometers are the sonic or ultrasonic types. They are well known and widely used in suspended solids and sludge applications and will be discussed in some detail in this section.

ULTRASONIC SLUDGE DENSITOMETERS

The attenuation of an ultrasonic pulse is a function of the amount of suspended solids in the path of the pulse and of the length of that path (Figure 6.7a). When an ultrasonic pulse is directed across a gap of a probe or across a pipe section, the ratio between the ultrasonic energy emitted and received is related to the sludge density and can be converted into an electronic output signal.

The ultrasonic pulse cannot penetrate through air bubbles or heavy solids, but it can pass through biological and other lighter sludges at concentrations in the 0.1 to 20% range (Figure 6.7b). When the purpose of the installation is to provide a sludge density switch, which can signal the interface between different density layers of slurry, the density switch shown in Figure 6.7c can be considered. This dual-headed sludge blanket

© 2003 by Béla Lipták

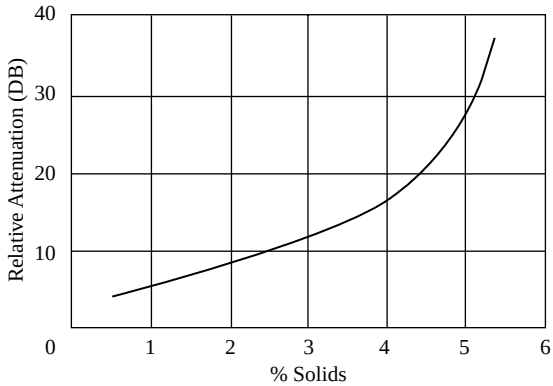

FIG. 6.7a
The attenuation of sonic or ultrasonic pulses increases as the sludge density rises.

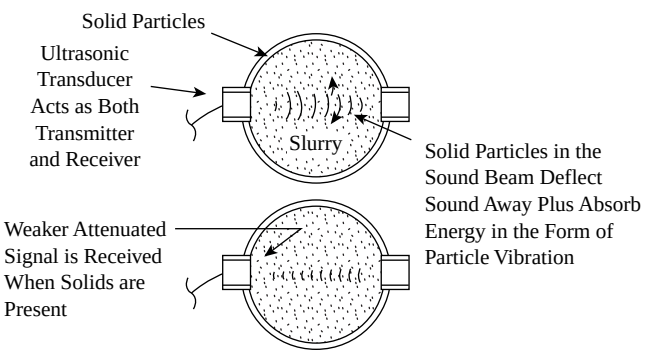

FIG. 6.7b
The operation of an ultrasonic slurry densitometer. (Courtesy of Markland Specialty Engineering Ltd.)

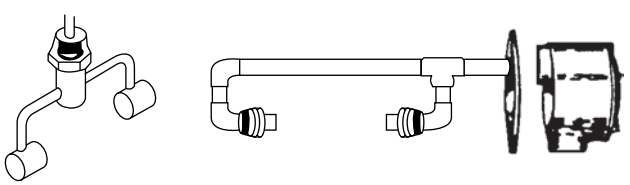

FIG. 6.7c
Sludge density switch can signal the interface between sludge blankets. (Courtesy of Delavan Inc.)

monitor is an ultrasonic sludge density sensor; its main use is in signaling the interface level between sludge blankets.

Calibration

The microprocessor-based sludge-and-slurry densitometer units can be provided with on-site calibration capability. These units are calibrated by filling the gap of the probe or the flow-through sensor first with water, and after that, pushing a button. This automatically sets the zero for the instrument.

Next the sensor head is filled with a sludge of known concentration and the output is adjusted until it reads this known value. At that point, a second button is pressed, and the sludge densitometer is now calibrated and will give linear readings between these two settings.

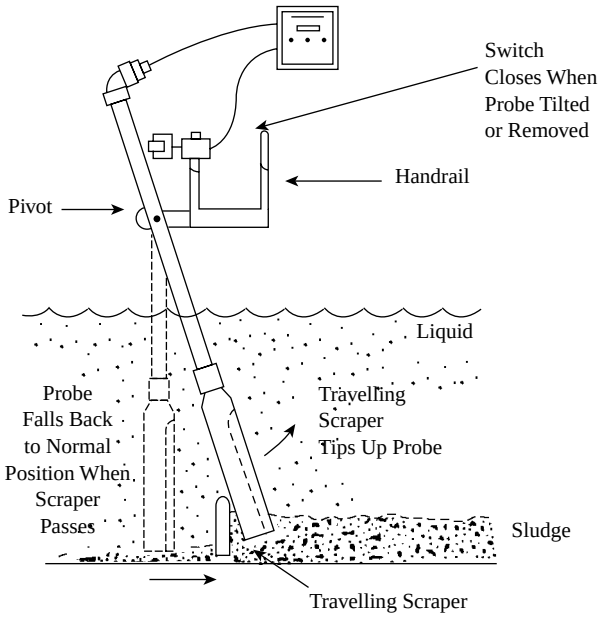

FIG. 6.7d
Sludge densitometer probe lifts to let traveling scraper pass. (Courtesy of Markland Specialty Engineering Ltd.)

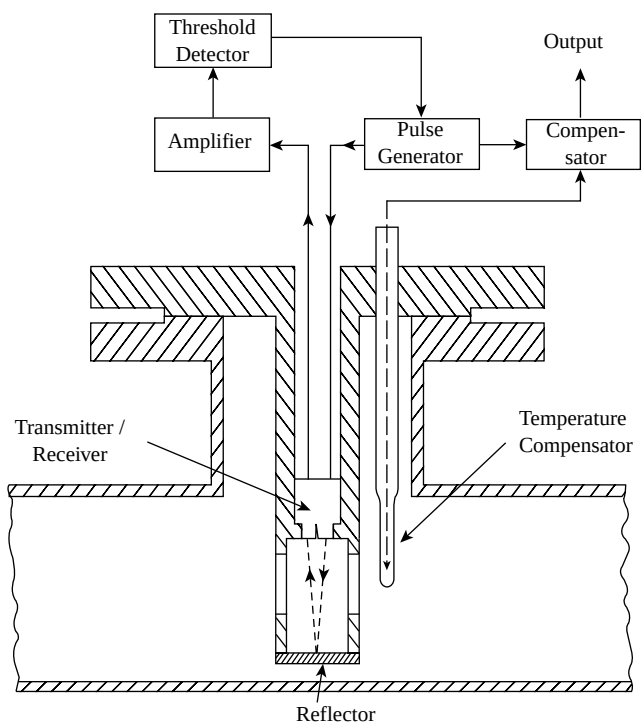

FIG. 6.7e
Sound velocity meter.

Another valuable feature of the microprocessor-based sludge density sensor is its ability to average and thereby damp its fluctuating and noisy measurement signal. This is desirable on closed-loop, on-line control applications, where a relatively steady output is needed for stability.

© 2003 by Béla Lipták

The probe-type designs, made to lift out of the way of a traveling scraper, are illustrated in Figure 6.7d.

SONIC DENSITOMETERS

This density detector consists of a device for measuring the speed of sound in the liquid, while compensating the detected speed for the effects of temperature and pressure. The speed of sound can be expressed as the square root of the ratio of E/ρ, where E is the bulk modulus and ρ is the mass density of the process fluid.

The sensor is calibrated by being immersed in distilled water, where the temperature is closely controlled at intervals between 32 and 167°F (0 and 75°C), and by measuring cycle repetition frequencies to an accuracy of 0.001% (Figure 6.7e).

Sound velocity meters have several limitations. The liquid must be clear; emulsions, dispersions, and slurries scatter the sound waves and cannot be monitored. Similarly, undissolved gases and bubbles (even those as small as several thousandths of an inch in diameter) cause errors and can render the instrument inoperable. Since the velocity of sound is a function of bulk modulus and density, variations in bulk modulus will cause significant measurement errors.

This instrument is used in pipelines to detect the interface between two different types of hydrocarbon products.

Bibliography

Capano, D., "The Ways and Means of Density," *InTech*, November 2000.

"Density and Specific Gravity," *Measurements and Control*, October 1993.

Gupta, S.V., *Practical Density Measurement, and Hydrometry*, Bristol, U.K. Institute of Physics, 2002.

Magaris, P., "On-Line Density Measurement Is Fast and Accurate," *Control Engineering*, June 1981.

"Standard Practice for Calibration of Transmission Densitometers," *ASTM Standard*, 1998.

Zacharias, E.M., "The Sonic Interface Detector Meets Field Tests in Pipelining," *Oil & Gas Journal*, July 8, 1970.

Zacharias, E.M., "Sonic Monitor for Solution Analysis," *InTech*, September 1970.

© 2003 by Béla Lipták

6.8 Liquid/Slurry/Gas Density—Vibrating Densitometers

B. G. LIPTÁK (1969, 1995) **C. H. HOEPPNER** (1982)
G. H. MURER (2003)

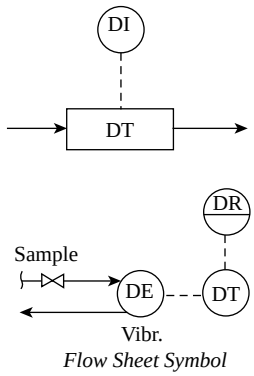

Flow Sheet Symbol

Types:	A. Oscillating Coriolis (see Section 6.5) B. Vibrating U-tube C. Vibrating cylinder or straight tube D. Vibrating twin-tube E. Vibrating fork F. Multivariable transducer for density and sound velocity
Applications:	B. Homogeneous liquids, light slurries, gases C. Homogeneous liquids, slurries, gases, gas-liquid mixtures D. Homogeneous liquids, light slurries E. Homogeneous liquids, slurries F. Homogeneous three-component liquids
Designs:	B. Bypass with sample flow required, or in-line for small pipes C. Bypass with sample flow required, or in-line for small pipes; retractable probe designs for large pipes D. In-pipe flange mounted design; bypass with sample flow required, or in-line for small pipes E. Tank or in-line installation F. Bypass with sample flow required, or in-line for small pipes
Design Pressure:	B. Up to 2900 PSIG (200 bars), depends on model and process connections C. Up to 2175 PSIG (150 bars), depends on model and process connections D. Up to 1440 PSIG (100 bars), depends on model and process connections E. Up to 3000 PSIG (207 bars), depends on process connection F. Up to 725 PSIG (50 bars)
Design Temperatures:	B. –13 to 500°F (–25 to 260°C), depends on model C. –328 to 392°F (–200 to 200°C), depends on model D. –58 to 356°F (–50 to 180°C), depends on model E. –58 to 392°F (–50 to 200°C) F. –13 to 257°F (–25 to 125°C)
Materials of Construction/Wetted Parts:	B. Stainless steel, Hastelloy, tantalum, Incoloy, borosilicate glass, and others C. Stainless steel, Ni-Span C, Hastelloy D. Stainless steel, Ni-Span C, Hastelloy E. Stainless steel, Hastelloy, Monel F. Hastelloy, Incoloy
Immunity to Pipe Vibration:	All types: Pipe vibration frequencies near the densitometer operating frequency or multiples thereof and/or mechanical stress introduced through process connections may increase errors; special precautions are recommended.

© 2003 by Béla Lipták

Interference from Temperature, Pressure, Viscosity, Sound Velocity, and Flow Velocity Changes:	All types: Effects are partially compensated by design. Error increases if certain limits are exceeded or measurement conditions are very different from the calibration conditions. Temperature compensation is usually provided but rapid measuring temperature changes may still cause error. Pressure compensation may be necessary if the line pressure varies. Flow velocity changes should be kept small for the smallest error. Sound velocity changes due to sample composition changes may cause error.
Limitations:	All types (except for special models): not suited for gas-liquid mixtures, foams, and for abrasive slurries B, D, and F. May be plugged by heavy slurries B, C. Not suitable for gases except for special models D, E, and F. Not suitable for gases
Minimum Span:	Most manufacturers now provide microprocessor-based controllers, with which almost any span can be set. For a rough estimation of the minimum span, take 20 times the value given for error.
Error:	B. 0.005 to 0.00005 SG, depending on model and SG range; typically 0.01 SG for gases, relative to dry air C. 0.001 to 0.0001 SG, depending on model; typically 0.01 SG for gases, relative to dry air D. 0.0001 SG E. 0.001 SG F. 0.0001 to 0.00005 SG, % concentration error depends on the application
Repeatability:	B. 0.0002 to 0.000005 SG, depending on model and SG range; typically 0.001 SG for gases C. 0.0001 to 0.00001 SG; typically 0.001 SG for gases D. 0.00002 SG E. 0.0001 SG F. 0.00001 SG
Cost:	B. Liquid density transmitter with 4–20 mA output, $4,000 to $6,000; high precision density transducer with separate controller, $8,000 to $12,000 C. Gas density system, $10,000 to $15,000; liquid density system, $6,000 to $10,000 D. $5,000 to $8,000 E. Appr. $6,000 F. $10,000 to $15,000
Partial List of Suppliers:	Anton Paar (www.anton-paar.com) (B, D, F) Automation Products Inc. Dynatrol Div. (www.dynatrolusa.com) (A) Chandler Engineering (www.chandlerengineering.com) (B) Solartron Mobrey (www.solartronmobrey.com) (C, E) Thermo Measurement Ltd. (www.thermomeasurement.com) (C, D) Yokogawa Corp. (www.yca.com) (B, C)

INTRODUCTION

A variety of widely used and accurate densitometers have been designed by exploiting the phenomenon that the natural frequency of oscillation varies with the mass of the oscillating body. Therefore, if the mass varies with density, the frequency of oscillation can be used to measure the density. The shape of the oscillating elements in the densitometers distinguishes their designs, and they are grouped on that basis in this section. The oscillating Coriolis element is not covered here, as it has been discussed in detail in Section 6.5. The other types include the vibrating U-tube; the vibrating cylinder and straight tube; the vibrating twin-tube; the vibrating fork; and multivariable transducers combining vibrating elements with other useful sensor principles for the concentration analysis of multi component liquids. These are discussed in the following paragraphs.

BASIC THEORY

Most of the theory behind vibrating densitometers can be derived from a simple mass-spring model (Figure 6.8a). The start of the derivation is the well-known formula defining

© 2003 by Béla Lipták

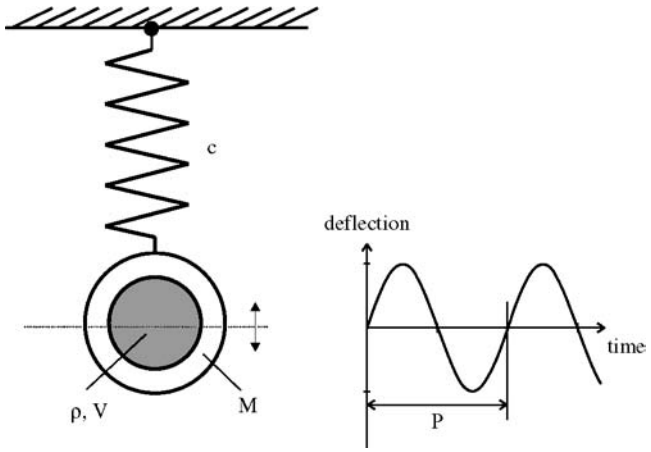

FIG. 6.8a
Mass-spring model of a vibrating densitometer.

the period P of resonant oscillation of a mass-spring model with mass m and spring constant c:

$$P = 2\pi\sqrt{\frac{m}{c}} \qquad \textbf{6.8(1)}$$

The oscillating mass of a vibrating densitometer consists of the following: the mass of the vibrating element M and the mass of the fluid participating in the oscillation, being the volume of the participating fluid V times its density ρ.

$$m = M + \rho \times V \qquad \textbf{6.8(2)}$$

Replacing m in Equation 6.8(1) with the right side of Equation 6.8(2) and rearranging leads to:

$$\rho = \frac{c}{4\pi^2 V} \times P^2 - \frac{M}{V} \qquad \textbf{6.8(3)}$$

Equation 6.8(3) relates the period of oscillation of a vibrating densitometer to the density of the fluid it is measuring. The two terms containing c, V, and M are now renamed for reasons of clarity:

$$A = \frac{c}{4\pi^2 V} \qquad \textbf{6.8(4)}$$

$$B = \frac{M}{V} \qquad \textbf{6.8(5)}$$

This leads to the "fundamental" equation for density measurement using vibrating sensors:

$$\rho = A \times P^2 - B \qquad \textbf{6.8(6)}$$

Equation 6.8(6) contains two unknowns, A and B, often referred to as transducer constants, which are determined by a process called calibration. This is carried out by measuring at least two standard materials of known density, typically air and water.

REAL LIFE BEHAVIOR

Now the question arises whether real life densitometers behave in such a simple way. The answer is that they do behave almost as simply as that. However, it is now time to reveal some of the difficulties associated with real life vibrating densitometers.

The first question is: How do damping forces, which are always present, influence the system? The answer is that, in a properly designed vibrating densitometer, the excitation system (an electronic device which keeps the densitometer oscillating at its natural frequency) exactly compensates for the damping effects. Therefore, damping forces do not need to be considered for normal operation.

Effects of Temperature, Pressure, and Flow

What happens with changing measuring temperatures? Looking at Equations 6.8(4) and 6.8(5) it can be seen that both transducer constants should be influenced by temperature, as a volume and a spring constant are involved. Therefore, an extended equation is necessary which is able to compensate for temperature influences on the transducer constants, provided that the temperature t is also measured:

$$\rho = A \times f_a(t) \times P^2 - B \times f_b(t) \qquad \textbf{6.8(7)}$$

$f_a(t)$ and $f_b(t)$ are functions of the temperature t which are again determined by calibration with standard materials of known density, this time at different temperatures within the operating range of the densitometer. Accurate temperature compensation can become very demanding if rapid measuring temperature changes occur.[1]

A very similar extension of the fundamental Equation 6.8(6) can be made if the compensation of pressure variations is needed. However, in many cases, the oscillating element is designed to minimize pressure influences to an extent that pressure compensation is not necessary. Flow variations also have a small, typically negligible influence on vibrating densitometers. As its speed increases, the fluid stream increasingly resists the lateral deflection caused by the oscillation of the sensing element. This can result in slight changes of the oscillation frequency of the sensor and consequential measurement errors.

There is still more to consider. All the equations above are based on a mass-spring model which is supported by an unlimited amount of "countermass." In real life, the countermass is either some additional mass built into or attached to the densitometer, another (counteracting) vibrating element, or, as in the case of circumferential oscillations, a part of the

© 2003 by Béla Lipták

same vibrating element. If the countermass does not behave like an unlimited amount of mass, the volume of fluid participating in the oscillation changes as its density changes. This is due to the fact that the nodal points of the oscillation of the vibrating element shift as the mass load changes with different densities. To compensate for this, for most densitometers a third transducer constant is introduced into Equation 6.8(7). This third transducer constant is multiplied by the period of oscillation or a function thereof.

Effects of Sample Properties

The validity of Equation 6.8(7) is subject to another important limitation:[2] the underlying model is only accurate if all of the fluid participating in the oscillation always follows the movement of the surface of the vibrating element in the same way. In real life, there are three cases in which this rule is broken:

1. The "sound velocity effect:" If the speed of the vibrating element's surface becomes significant in relation to the sound velocity in the fluid, part of the participating fluid will lag behind the movement of that surface depending on the actual sound velocity. This causes the fluid to exert different inertial forces with different sound velocities, leading to different oscillation frequencies of the sensor and consequential measurement errors. In the case of gas density measurement with high frequency oscillating sensors, this effect can lead to excessive error if no countermeasures are provided.

   The "viscosity effect:" If the movement of the vibrating element's surface is such that shear flow is generated in the fluid, the flow pattern will change depending on the actual viscosity of the fluid. This causes the fluid to exert different inertial forces with different viscosities, again leading to different oscillation frequencies of the sensor and consequential measurement errors if no countermeasures are provided. The viscosity effect has to be taken into consideration for high-precision density measurement when the viscosity varies greatly.
2. Measurement of highly inhomogeneous fluids: If the constituents of an inhomogeneous fluid differ considerably in their density and flow behavior, they will move relative to each other when subject to oscillating forces. This leads to different inertial forces depending on the degree of inhomogeneity, again causing different oscillation frequencies of the sensor and consequential measurement errors.

Some additional, practical aspects are as follows: if a fluid forms deposits on surfaces, the mass M of the vibrating element will increase and the fluid volume V will decrease. This leads to drifts of the densitometer and requires suitable periodic cleaning and readjustment of the sensor. If abrasive fluids are measured, M and c will typically decrease and V will increase, again resulting in drifts of the densitometer. The solution is to use abrasion-resistant materials or to carry out frequent readjustments and replace the sensor once it is seriously degraded.

VIBRATING U-TUBE

In this section, two different designs based on the vibrating U-tube concept are discussed. The first design utilizes the period of oscillation measurement for density determination; the second design relies on vibration amplitude measurement.

Vibrating U-Tube with Period of Oscillation Measurement

Figure 6.8b shows a typical design in which the sample fluid flows continuously through a U-shaped tube and the frequency of oscillation is measured. This design is mainly used in high-precision online density measurements, as required for the determination of concentration in the brewing, soft drink, pharmaceutical, and chemical industries. Here, the oscillating U-tube is driven by a magnet and coil assembly and a feedback amplifier so as to maintain the oscillation at the resonant frequency of the system. A resistance-type platinum temperature sensor is attached to the U-tube for automatic temperature compensation. In order to avoid measurement errors at measuring temperatures below ambient, the U-tube is sealed in a metal box to prevent humidity condensations forming.

The resonant frequency of the U-tube and the measured temperature are transmitted to a controller through a twin wire cable which also supplies power to the densitometer. Resonant frequency and temperature are converted into density at measuring temperature, density at reference temperature, and concentration by the microprocessor-based controller. There, analog and digital outputs provide corresponding signals for further processing.

This densitometer type is also available with a built-in controller and 4–20 mA output at the expense of a slightly increased error. Several design variations with special materials for the wetted parts and U-tube diameters from 1/8 in. (3 mm) up to 1 in. (25 mm) are available. Intrinsically safe versions are provided for applications in hazardous atmospheres.

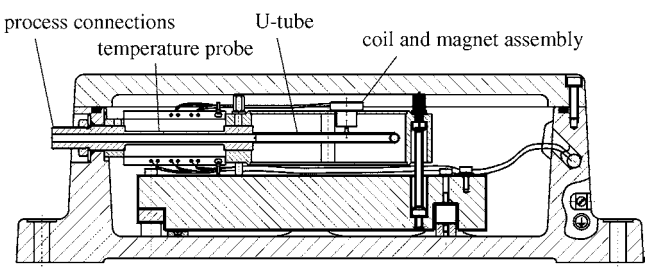

FIG. 6.8b
High-precision vibrating U-tube densitometer. (Courtesy of Anton Paar GmbH.)

© 2003 by Béla Lipták

This design can handle gases, homogeneous fluids, and light slurries with low to medium viscosities. Larger amounts of entrained gas cause the oscillation to stop due to excessive damping. Therefore, such samples cannot be measured unless increased line pressure causes the gas bubble volume to be compressed to a suitable extent and/or causes the gas to become dissolved in the liquid. Connecting the densitometer to the process with flexible hoses prevents influence from pipe vibration. If the densitometer is used in a bypass configuration, proper means have to be provided to secure a representative sample flow through the bypass (orifice in main line; bypass around pump in main line; pump in bypass; etc.).

Vibrating U-Tube with Vibration Amplitude Measurement

A different, low cost/low accuracy concept is used in the detector illustrated in Figure 6.8c. The process fluid flows continuously through a 1/2 in. (12.5 mm) diameter U-tube section which is welded at the node points. The total mass of the U-tube assembly is affected by the process fluid density. A pulsating current through the drive coil brings the U-tube into mechanical vibration. An increase in process density increases the effective mass of the U-tube and, therefore, decreases the corresponding vibration amplitude. An armature and coil arrangement is provided to detect the vibration at the "pickup" end. The armature vibrates together with the U-tube and induces an AC voltage proportional to the fluid density in the pickup coil. This AC voltage is then converted into DC millivolts, which is more compatible with remote recorders or controllers. In installations where the process temperature is expected to vary, an automatic temperature compensating circuit performs the required temperature correction.

If the process stream contains entrained gases, then low flow velocities can cause separation and trapping of the gas. The measured value then represents some average value of the liquid and gas density. As with most vibrating densitometer designs, the entrained gas influence on the measured density can be compensated to some degree by offsetting the measurement result, provided that line pressure and flow remain suitably constant.

Several different materials for the wetted parts are available for this densitometer, e.g., for applications with aggressive liquids or abrasive slurries. This densitometer can handle homogeneous fluids or light slurries with low or moderate viscosities. High-viscosity streams or heavy slurries are likely to plug the small diameter U-tube. If the densitometer is used in a bypass configuration, proper means have to be provided to secure a representative sample flow through the bypass.

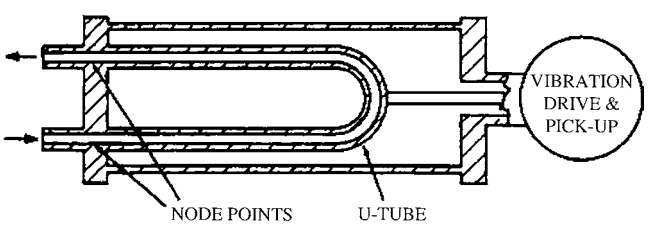

FIG. 6.8c
Vibrating U-tube density detector.

VIBRATING CYLINDER OR STRAIGHT TUBE

These two densitometer designs have a similar shape of vibrating element, but different oscillation modes are applied. In the vibrating cylinder design, circumferential oscillation of a cylinder is used for density measurement. In the vibrating straight tube design, lateral oscillation of a single tube is utilized.

Vibrating Cylinder

In the vibrating cylinder design for gas density measurements as shown in Figure 6.8d, the gas flows around (or both through and around, as in similar designs) a thin-walled cylinder that is located concentrically inside the housing of the densitometer. If circumferential oscillation normal to the cylindrical element is induced and sustained, the element will vibrate at a frequency that is a function of its stiffness and the oscillating mass. Since the gas surrounding the cylinder is caused to oscillate, the mass of the entire system in vibration consists of the mass of the spool plus that of the fluid. If a loop closed around the oscillator exhibits a proper phase

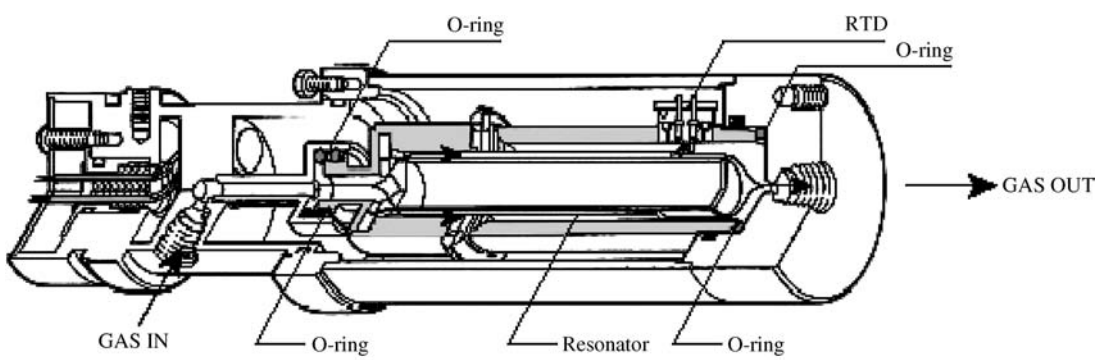

FIG. 6.8d
Gas densitometer using the vibrating cylinder concept. (Courtesy of Yokogawa Corp.)

© 2003 by Béla Lipták

shift, vibration is sustained at the natural frequency. Thus, for a cylinder of a fixed stiffness and mass, variations in oscillating frequencies are due to variations in gas densities. In this particular design, both fundamental and overtone harmonic oscillations are applied in order to compensate for interferences from other gas and process properties.

Only specific vibrating cylinder densitometer designs are suitable for gas density measurements, whereby special consideration has to be given to measurement errors induced by sound velocity changes due to gas composition changes.[3] When used as a gas mass-flow meter system, the densitometer should be installed in a pocket of the pipeline (Figure 6.8e) in order to keep the gas temperature in the densitometer at the same temperature as in the pipeline.

In a design suitable for liquids as shown in Figure 6.8f, oscillations are induced in a cylindrical spool and sustained by a feedback amplifier. A predetermined number of oscillations is counted and the elapsed time is measured by a high-frequency clock. The density signal is then developed from these data. Variations in spool stiffness and natural oscillating frequencies are minimized by several means. Temperature effects on spool dimensions and elastic modulus are kept as small as possible by alloys such as Ni-Span C. Fluid pressure is exerted on both surfaces of the spool, so that pressure variations have no influence on oscillation. This design is suitable for light and clean liquids of low viscosity such as light hydrocarbon mixtures, and not for slurries and viscous and/or abrasive materials. Typically a bypass type of installation is needed.

The vibrating cylinder densitometers are usually provided with platinum RTD (resistance temperature detector) elements for temperature compensation. Microprocessor-based converters serve to compensate for pressure and temperature effects and also to calculate mass flow rates based on density and volumetric flow rate signal inputs, if required.

Vibrating Straight Tube

The vibrating straight tube design is popular for all kinds of liquid density applications (Figure 6.8g). It utilizes lateral oscillation of a single straight tube of 1 in. diameter. To minimize measurement errors introduced by mechanical stress from the ambient, flexible bellows located between the process connections and the vibrating straight tube are applied. Temperature measurement for automatic temperature

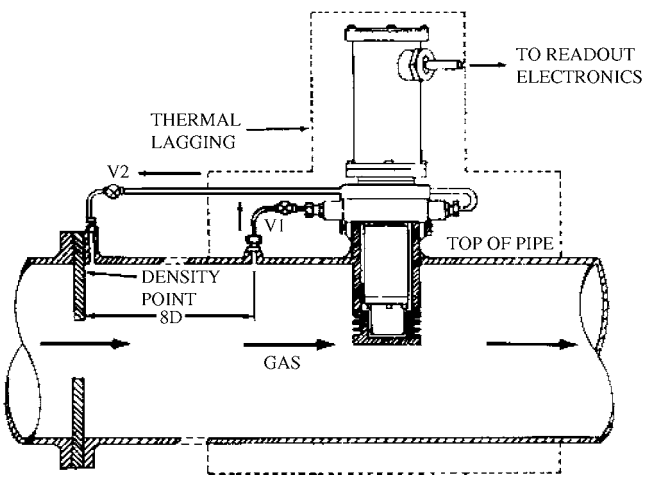

FIG. 6.8e
Vibrating cylinder densitometers are often used to calculate mass flow rates of natural gas or similar flows from orifice pressure drops. (Courtesy of Schlumberger Transducer Division)

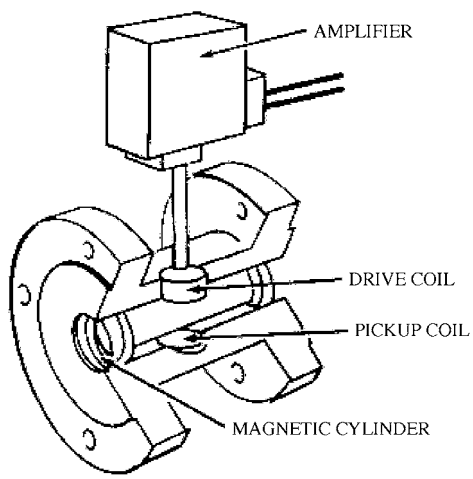

FIG. 6.8f
Thin-walled stainless steel spool, which is secured at one end, is oscillated, and the oscillation frequency is detected as a measure of density. (Courtesy of Sarasota Automation Inc.)

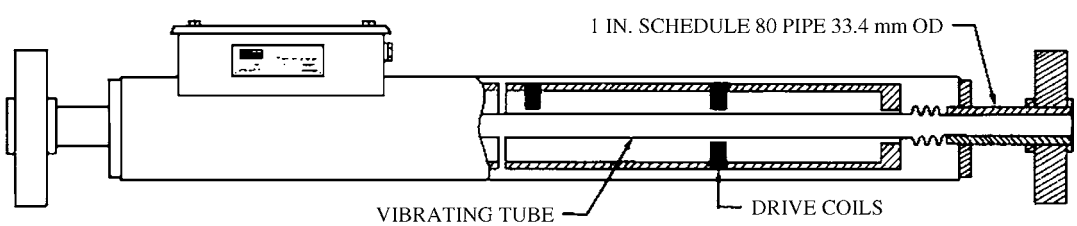

FIG. 6.8g
The 1 in. (25 mm) densitometer can be installed in the process pipe or, when the line size is larger, in a bypass. (Courtesy of Schlumberger Transducer Division)

© 2003 by Béla Lipták

compensation purposes is provided by a resistance-type platinum temperature sensor.

Due to the single straight tube of 1 in. diameter, highly viscous fluids and heavy slurries can be measured. The design is also applicable for difficult liquids such as crude oils, although regular mechanical cleaning and readjustment[4] is then necessary to avoid measurement errors due to the formation of residue layers on the wall of the vibrating straight tube. Special versions for applications with entrained gas are available. Intrinsically safe versions are provided for applications in hazardous atmospheres. A wide variety of materials for the wetted parts and special versions for hygienic and other applications are offered.

Measurement errors due to the potential separation effects on inhomogeneous samples have to be considered. Specific installation rules must be followed in this case. Sound velocity changes due to sample composition changes may also have some influence on the result. If the densitometer is used in a bypass configuration, proper means have to be provided to secure a representative sample flow through the bypass.

VIBRATING TWIN-TUBE

A successful design to avoid measurement error being introduced by mechanical stress is based on the twin-tube concept (Figure 6.8h). It consists of two parallel tubes of equal geometry through which the sample flows. The sample stream is equally distributed between the two parallel tubes. Ideally, these two tubes have the same natural frequency and oscillate against each other (180° phase shift) driven by a suitable feedback system. The twin-tube concept allows the production of relatively lightweight densitometers providing a reasonable level of accuracy.

Transducers are available as flange-mounted devices for in-pipe installation. Other manufacturers provide designs with 1 in. (25 mm) process connections which are normally applied in a bypass-type installation. Temperature measurement for automatic temperature compensation purposes is provided by a resistance-type platinum temperature sensor. Several materials for the wetted parts and intrinsically safe versions for applications in hazardous atmospheres, as well as special versions for hygienic and other applications are offered. Twin-tube designs can be used for homogeneous, low to medium viscosity liquids. If the densitometer is used in a bypass configuration, proper means have to be provided to secure a representative sample flow through the bypass.

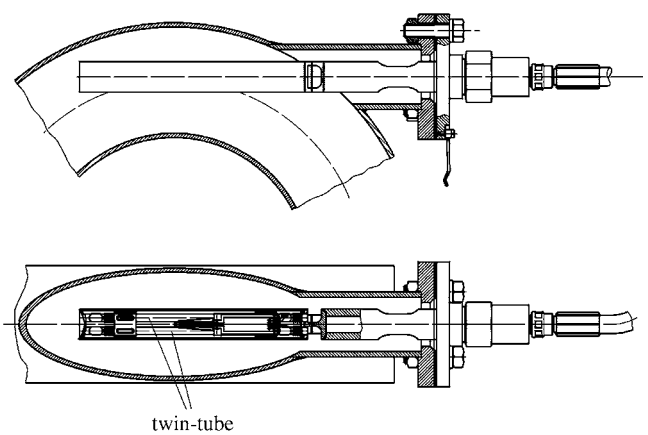

FIG. 6.8h
Vibrating twin-tube densitometer for in-pipe flange-mounted installation. (Courtesy of Anton Paar GmbH.)

VIBRATING FORK

The vibrating fork design became popular in the late 1990s due to its low cost and simplicity (Figure 6.8i). The main feature of this type of densitometer is that it can be mounted directly on a tank or large diameter pipe wall. The sensor acts like a tuning fork immersed in a liquid. Piezo-ceramic elements and a suitable feedback amplifier drive the oscillation of the sensor. Although its natural oscillation frequency is heavily influenced by both the density and viscosity of the liquid, ways have been found to compensate for most of the viscosity influence. Thus density can be measured with reasonable accuracy.

The viscosity influence is compensated by determining both the natural frequency of oscillation and the damping of the oscillation exerted by the liquid. The same sensor design can also be used for liquid viscosity determination. Temperature measurement for automatic temperature compensation purposes is provided by a resistance-type platinum temperature sensor.

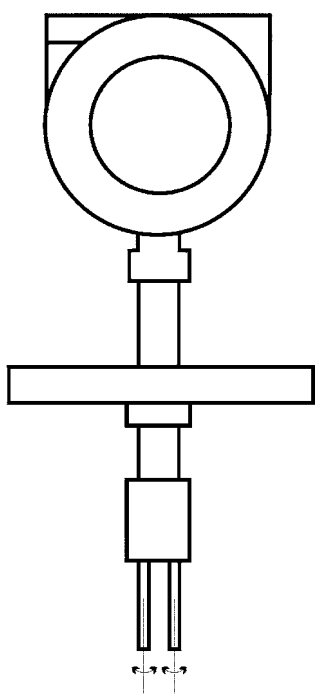

FIG. 6.8i
Vibrating fork densitometer.

© 2003 by Béla Lipták

An explosion-proof version and a selection of different wetted materials are offered. A microprocessor-driven controller is built into the densitometer, allowing various conversions of density and temperature into density-related properties. A 4–20 mA output and an RS 485 interface are provided. The vibrating fork densitometer can be used for both low and high viscosity liquids and slurries.

MULTIVARIABLE TRANSDUCER FOR DENSITY AND SOUND VELOCITY

High-precision density measurement is often applied for the accurate concentration determination of binary liquids such as alcohol/water solutions, sugar/water solutions, acids, and many other types of binary solvent/solute systems. There was a need for a similarly simple and precise method for the concentration determination of ternary systems such as alcohol/sugar/water or NaOH/NaCl/H_2O. Although such determinations have already been performed for many years by combining, e.g., density with separate refractive index or conductivity transducers, in the 1990s a transducer was developed which combines a vibrating U-tube densitometer and a high-precision sound velocity measurement in one housing (Figure 6.8j).

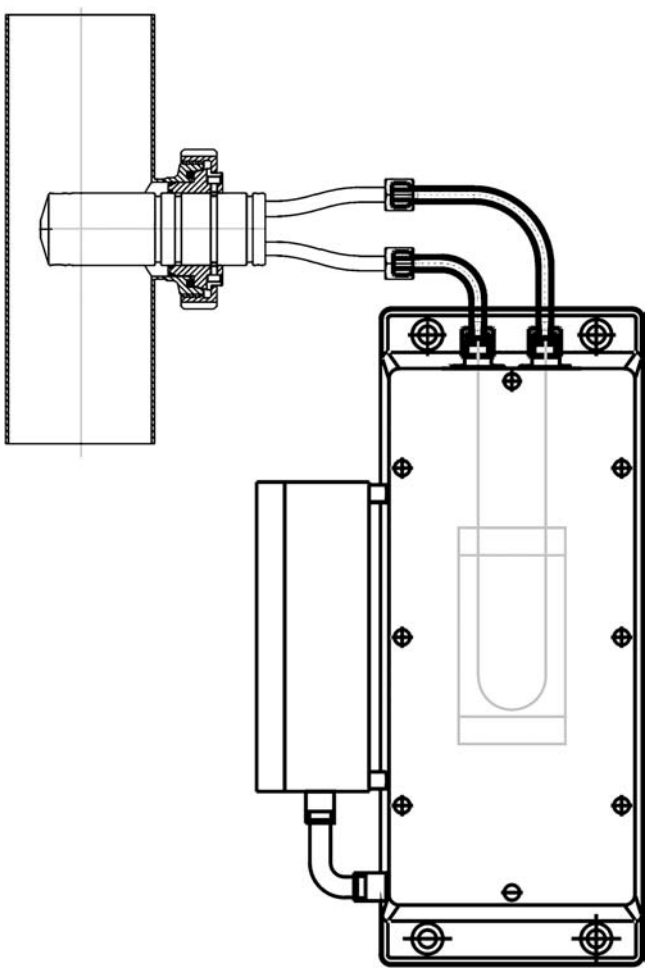

FIG. 6.8j
Combined density and sound velocity transducer for concentration analyses of three component types of liquids. (Courtesy of Anton Paar GmbH.)

Density, sound velocity, and temperature are measured and transmitted to a controller through a twin-wire cable, which also supplies power to the transducer. The controller provides analog and digital signal outputs for further processing. The system is successfully applied for on-line beer and soft drink concentration analyses as well as for the measurement of many ternary systems in the chemical industry.

The transducer is available with a 1/4 in. (6.6 mm) U-tube diameter and is normally applied in a bypass type installation. Several materials for the wetted parts and an intrinsically safe version for applications in hazardous atmospheres are offered. The design can be used for homogeneous, low to medium viscosity liquids.

References

1. Kotnik, P., Murer, G., et al., "Accurate Fluid Density Measurements Using Oscillating Type Density Meters under Rapid Measuring Temperature Variations," ACHEMA, Frankfurt, 2000.
2. Stabinger, H., "Density Measurement Using Modern Oscillating Transducers," Yorkshire Trading Standards Unit, Sheffield, 1994.
3. Matthews, A.J., "Theory and Operation of Vibrating Element Liquid and Gas Densitometers in the Hydrocarbon Industry," NEL Density Seminar, East Kilbride, October, 1994.
4. Campbell, M. and Pinto, D., "Density Measurement—A Laboratory Perspective," NEL Density Seminar, East Kilbride, October, 1994.

Bibliography

Capano, D., "The Ways and Means of Density," *InTech*, November 2000.

Gordon, I., "Vibrating Element Technology for Measuring Liquid Density in Process Applications," ACHEMA, Frankfurt, 2000.

ISO 15212—2:2001, Oscillation-type density meters. Part 2: Process instruments for homogeneous liquids, ISO, Geneva, 2001.

Kotnik, P., Murer, G., et al., "Accurate Fluid Density Measurement Using Oscillating Type Density Meters under Rapid Temperature Variations," ACHEMA, Frankfurt, 2000.

Magaris, P., "On-Line Density Measurement Is Fast and Accurate," *Control Engineering*, June, 1981.

Schietinger, M., "Mass Flow vs. Volumetric Flow," *Measurements and Control*, September, 1990.

"Standard Practice for Calibration of Transmission Densitometers," *ASTM Standard*, 1998.

© 2003 by Béla Lipták

6.9 Weight-Based and Miscellaneous Densitometers



Flow Sheet Symbol

C. H. HOEPPNER (1982) **B. G. LIPTÁK** (1969, 1995, 2003)

Design Pressure:	2400 PSIG max (16.6 MPa) with solid connections; 200 PSIG max (1.37 MPa) with flexible metallic connectors; 40 PSIG (276 kPa) with rubber connectors
Design Temperature:	500°F (260°C) max with solid connections; 180 to 300°F (82 to 149°C) max with various flexible hoses
Materials of Construction:	For wetted parts: bronze, stainless steel, Carpenter 20, Pyrex, nickel, Monel, Karbate, polyvinyl chloride, or ebonite lining; for flexible hoses: stainless steel, Monel, neoprene, Hypalon, Teflon, Viton-A, butyl, silicone rubber
Inaccuracy:	The larger of 1% of span 0.0003 SG
Minimum Span:	0.01 to 0.5 SG, depending on design
Approximate Cost:	From $3000 for laboratory units up to about $10,000 for larger industrial units in corrosion-resistant materials

INTRODUCTION

In this section a few, lesser-known methods of density measurement will be discussed. Some of these are no longer on the market, while others are used in the laboratory only. While they are not widely used, their operations are based on valid principles. For these reasons and for the sake of completeness, they are included in this chapter.

WEIGHT-BASED DENSITOMETERS

One of the methods of weighing a fixed volume has already been discussed in Section 6.2, where the force of buoyancy of a fixed volume float was shown to be detected by a variety of displacement-type density sensors. Another densitometer family is discussed here, where the density of the process fluids is determined by the measurement of the weight of fixed volumes. All of these detectors consist of a constant volume flow-through chamber that is continuously weighed.

The design variations within this group involve the shape of the weighing chamber, which can be a section of a straight piece of pipe, a U-tube section, or a small tank. Furthermore, the connection between the weighing chamber and the process can be solid or flexible, and the instrument can be a multipurpose device or can only be a controller. Table 6.9a compares some features of the density detectors discussed in this section.

Weighed-Bulb-Type Densitometer

The closed liquid system illustrated in Figure 6.9b consists of a bulb and sample tubing. The use of the vent hole and the siphon tube guarantees that no gases or liquids are trapped in the bulb.

The in and outlet tubes also serve as spring elements of the weighing mechanism. The bulb is suspended from one end of the main beam, which is balanced by the counterweight on the other end. The counterweight is used to zero the instrument by balancing the dead weight of both the bulb and of the zero reference (minimum density) fluid within the bulb. (For example, for a range of 0.65 to 0.75 SG [specific gravity], 0.65 SG represents the minimum density noted above.)

As liquid density increases, the bulb descends. Its descent is resisted by the spring action of the sample tubes. The bulb motion is directly proportional to the density of the process fluid and is transmitted to the main beam so that it also moves in proportion to the changes in specific gravity of the flowing sample. This movement can actuate an indicator, recorder, or controller.

© 2003 by Béla Lipták

TABLE 6.9a
Comparisons Among Density Sensors that Detect the Weight of Fixed Volumes

	Type of Design			
Features	*Weighed Bulb*	*U-Tube*	*Straight-Tube*	*Direct Controller*
Minimum span (SG)	0.05	0.02–0.05	0.5	—
Maximum span (SG)	0.5	3.5	1.0	—
Inaccuracy (% span)	±1%	±1–2% or 0.0003	±1%	±1% of setpoint
Materials for wetted parts	Brass, stainless steel, Carpenter 20	Stainless steel, Monel, nickel, Karbate, glass or lined with PVC or ebonite	Stainless steel	Stainless steel and Pyrex
Materials for flexible hoses	None	Neoprene, Hypalon, Viton-A, buty1, Teflon or silicone rubber, also stainless steel or Monel	Neoprene, buty1, Viton-A	Neoprene, buty1
Design pressure (PSIG/kPa)	Up to 2400/16,547	40 to 200/276 to 1379	50/345	10/69
Design temperature (°F/°C)	Up to 500/260	180 to 300/82 to 149	180/82	180/82
Weigh chamber volume (gallon/l)	0.265/1	0.2 to 1.0/1 to 3.8	0.5 to 1.0/1.9 to 3.8	5.0/18.9
Sample flow rate (GMP/lpm)	0.265/1	1 to 70/3.8 to 265	125/473	5 to 15/18.9 to 56.7
Sample connection size (in./mm)	$^1/_4$ /6.35	7/8 to 2/22.2 to 50.8	2/50.8	$1^1/_2$ /38
Temperature compensation	Automatic to 500°F/ 260°C	Automatic but limited	Nonstandard	No

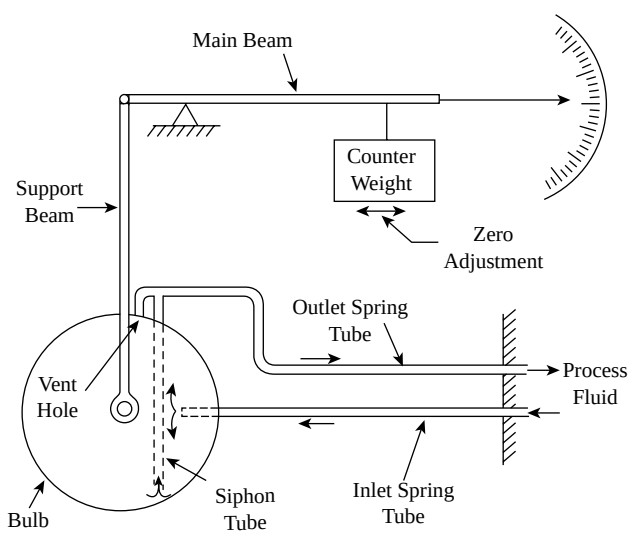

FIG. 6.9b
Weighed-bulb density sensor.

Design Features The unit is also available as a motion balance transmitter. When the readout is located several miles from the detector, telemeter type transmission can be considered, utilizing two-wire circuits, such as telephone or radio channels.

This densitometer is provided with a thermostatic coil that detects the outlet process temperature and automatically corrects the reading for changes in specific gravity due to temperature variations. The compensator can correct for process temperatures from −100 to 500°F (−73 to 260°C).

From Table 6.9a, it can be seen that the main advantage of the weighed-bulb design is that it contains no flexible hoses. Therefore, it can be used on high process pressure and temperature applications.

The unit is designed for low sample flow rates with velocities in the laminar range. The advantage of such design is that the forces created by fluid turbulence are eliminated, while the disadvantage is that the small tubes and small openings provide a potential for plugging. For this reason, the sensor should be considered for use only on clean and nonviscous services.

U-Tube Density Gauge

As shown in Figure 6.9c, the design consists of a U-shaped pipe section pivoted on flexures about the horizontal axis. Process fluid flows through this loop and its weight is transferred to a weight beam. A counterweight on the weight beam balances the pipe section when filled with a fluid of minimum density. An increase in process density produces a proportional additional force on the weight beam, which is then sensed.

While newer installations use electronic transmitters, this type of densitometer can mostly be found in older, existing installations that are still pneumatic. For this reason, in Figure 6.9c, the transmitter is shown as a pneumatic unit.

© 2003 by Béla Lipták

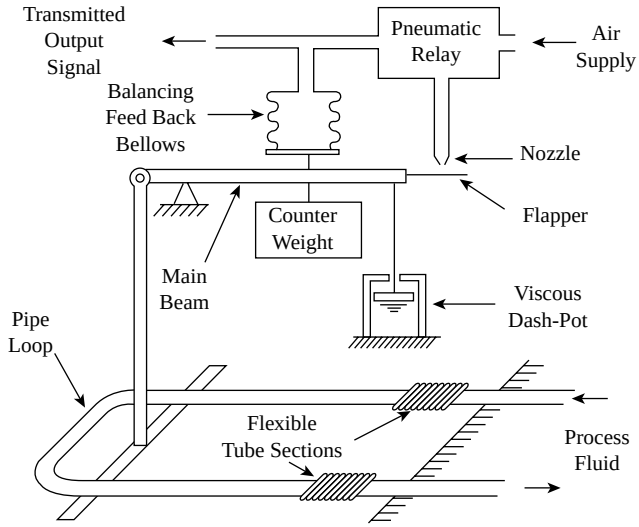

FIG. 6.9c
U-tube density transmitter.

In such designs, the added force caused by an increase in density is sensed by the nozzle-flapper section of a pneumatic force balance transmitter. Increased density increases the back-pressure on the nozzle as the flapper moves closer to the nozzle; this results in an increase in the output signal from the pneumatic amplifier relay. This transmitter output signal is also sent to the feedback bellows, exerting a counter force to rebalance the main beam. Because of the force balance nature of the design, the total motion of the flapper is only a few thousandths of an inch.

Applications The effects of variations in the process pressure or flow rate are minimized by locating the pivots on the vertical center line of the U-tube. This stays the loop against horizontal forces. The viscous dash-pot is used to eliminate vibration effects or other sudden changes in vertical force components. This design has been successfully used on slurries, if the flow velocity was kept high enough to prevent settling. This normally requires velocities in the range of 5 to 8 ft/s (1.5 to 2.4 m/s).

The process fluid can also contain gas bubbles. If it is desired to measure the density of only the liquid phase (without gas entrainment), then a trap or separator has to be installed upstream to the density gauge. If the specific gravity of the total stream (with gas entrainment) is to be measured, then the process pressure must be controlled so that the gas bubbles maintain their volume. Also, the fluid velocity must be high enough to prevent separation or trapping of the gas within the U-tube.

As shown in Table 6.9a, the design pressure and temperature limitations of these sensors are a function of the flexible connectors used. The flexibility of these connectors also affect the accuracy of the measurement. For example, accuracy when using neoprene liners on the braided connectors is twice as good (1% of span) as that when using Viton liners (2% of span).

Temperature Compensation Small variations in process temperature (±20°F, or ±11°C) can be compensated for automatically if the gauge has been factory-calibrated using the actual process fluid at the actual process temperature. If large temperature variations are expected, it is necessary to install a temperature transmitter in the process stream and to add its signal to the output of the density transmitter. The maximum temperature compensation span is a function of the density span used. Determination of the temperature transmitter range is described in the example below.

Assume a density span for the particular installation of 0.08 SG, or a range of 0.60 to 0.68 SG. Also assume that the coefficient of thermal expansion of the particular process fluid is 0.0004 SG/°F. The effect of temperature change on density must not exceed the density span of the detector. For this reason, the temperature span is determined as density span divided by expansion coefficient, which in this case is 0.08/0.0004 = 200°F (93°C). Therefore, assuming that the density measurement is to be referenced to 60°F (16°C), and assuming that the process temperature will always be over 60°F, the actual range of the transmitter can be 60 to 260°F (33 to 144°C). This compensation is illustrated in Figure 6.9d, assuming that the thermal expansion coefficient is linear for the temperature range.

Straight-Tube Density Transmitter

On applications where the process fluid is a heavy slurry or one that contains large solid particles that would not flow through a U-tube loop, the design illustrated in Figure 6.9e can be considered. Its main advantage is that

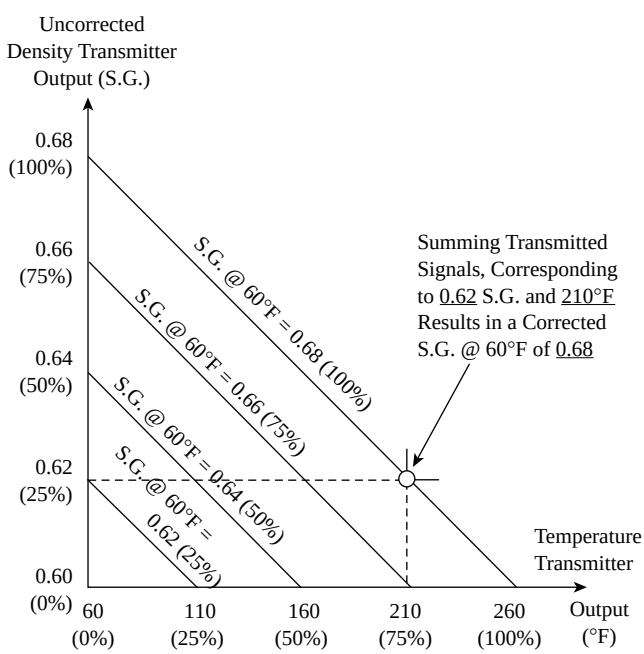

FIG. 6.9d
Temperature compensation of density sensors by summing transmitter outputs.

© 2003 by Béla Lipták

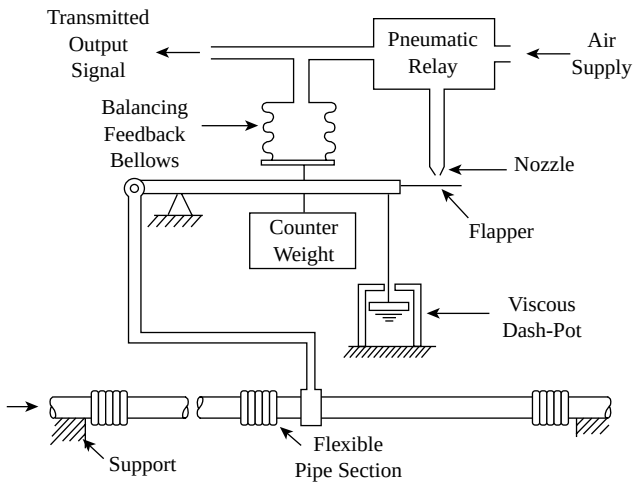

FIG. 6.9e
Straight-tube density transmitter.

any process fluid that will flow through a 2 in. (50 mm) pipe will pass through this detector. The principle of operation is the same as that of the U-tube design, but the quality of performance is lower. The other drawbacks are noted in Table 6.9a and include the fact that narrow density spans are not available. Therefore, the ±1% inaccuracy based on the actual span represents a substantially greater error than with the U-tube design. Temperature compensation can be provided by the use of a temperature transmitter and summing relay.

Direct Density Controller

The previously discussed density sensors use the counterweight for zero suppression only, and their transmitted output is a function of the force generated by a rebalancing loop. The direct density controller shown in Figure 6.9f is different. Here the counterweight on the beam scale is set to balance the sample chamber and the liquid it contains when it is at the desired density. Therefore, the counterweight represents the set point of this controller. Any deviation from this density set point will deflect the beam and that movement will initiate a counteraction by the controller. In other words, the controller detects the position of the beam and counteracts any movement away from the horizontal.

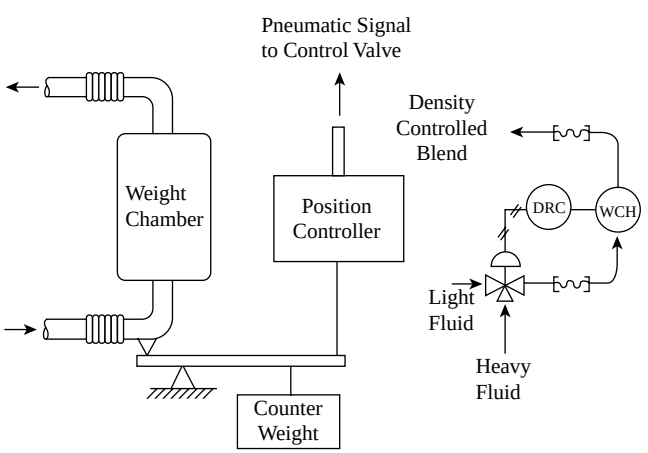

FIG. 6.9f
Density controller and its typical installation.

BALL-TYPE DENSITOMETER

The ball-type density detector consists of a number of $^1/_4$ in. (6.3 mm) diameter, hollow and opaque silica glass balls, typically 10 to 50 of them. Silica glass is chosen because of its low thermal expansion of 0.5 parts in 10^6/°F. The balls are free to move in vertical tubes that are immersed in the fluid to be measured (Figure 6.9g). Each ball has a different density; for example, in the range of 0.7 to 0.9 SG, 20 balls are graded as 0.70, 0.71, 0.72, to 0.89 SG, and the inaccuracy therefore is less than 0.01 SG.

Fiberglass probes conduct light through one side of the tubes in which the balls are contained. Probes through the other side of the tubes pick up the light if the ball is not intervening by blocking it. The last ball to float determines the density of the fluid. The tubes are usually located near the bottom of the tank and are only twice as long as the ball train that they enclose. Alternately, however, the tubes may extend to the full height of the tank to detect density variations and density stratification. The spherical shape of the floats reduces friction to the tube walls, permitting the density meter to be mounted as much as 85 degrees to the vertical.

Photo diodes are used to convert the light signals into an electrical one, which can enter a data highway or be used in an analog readout.

A valuable feature of this densitometer is its intrinsically safe nature. It may be used in explosive mixtures without danger of causing an explosion. It is also unaffected by electric or magnetic fields.

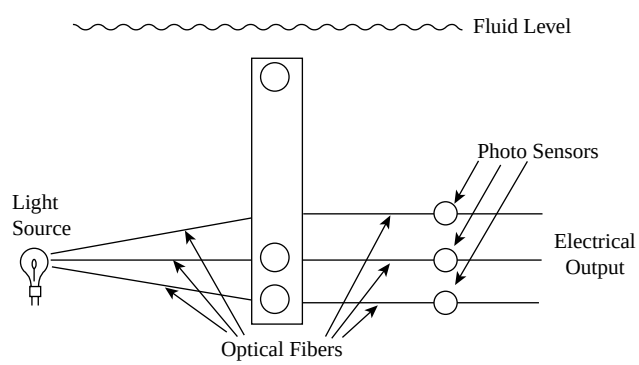

FIG. 6.9g
Multiple free-ball density meter.

© 2003 by Béla Lipták

CAPACITANCE DENSITOMETERS

The capacitance is proportional to dielectric constant, which, in turn, is proportional to density. Therefore, a capacitance type densitometer can be built from two concentric cylinders. When process fluid fills the cavity between the electrodes and a bridge circuit measures the capacitance between the cylinders, a densitometer results.

Fuel Weight Measurement

This method of density detection can also be applied to measure the total weight of fuel in a tank. To do so, the probe, consisting of two concentric cylinders, extends from the top to the bottom of the tank; the cavity between them fills to same level as the fuel level in the tank. The product of density (inferred from the dielectric constant) and of the liquid volume in the tank (inferred from the total level) is measured and displayed as the total weight of fuel in the tank.

Two features of this system are of interest. First, for irregularly shaped tanks, the electrodes may be contoured to match the shape of the tank, providing a linear output (Figure 6.9h). Second, many probes may be connected in parallel to sum the mass in several tanks or to compensate for tilting of the tank, as is usual in aircraft applications.

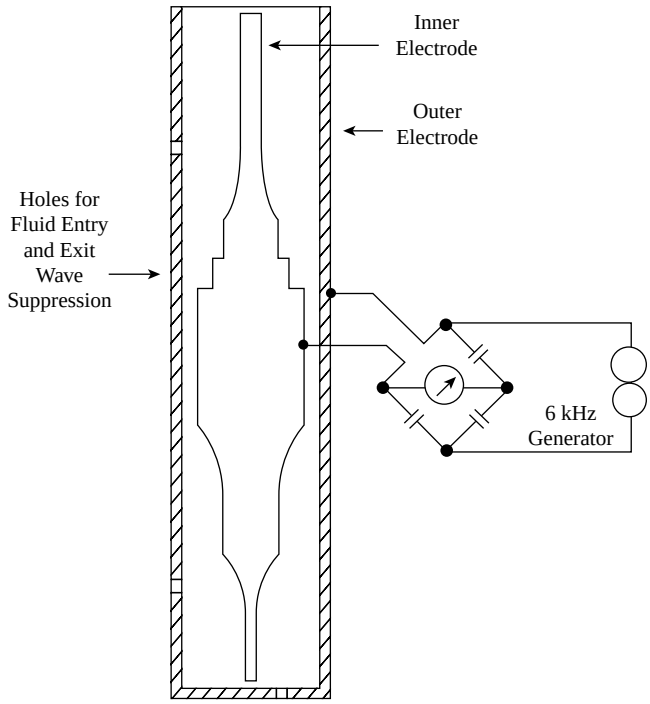

FIG. 6.9h
Capacitance probe contoured to compensate for tank irregularities.

Bibliography

Cameron, D., "An Instrument of Measurement of Liquid Density," *Industrial Electronics,* March 1967.

Capano, D., "The Ways and Means of Density," *InTech,* November 2000.

"Density and Specific Gravity," *Measurement and Control,* October 1991.

Garside, J. and Mullin, J.W., "Continuous Measurement of Solution Concentration in a Crystallizer," *Chemistry and Industry,* 1966, pp. 2007–2008.

Gupta, S.V., *Practical Density Measurement and Hydrometry,* Bristol, U.K., Institute of Physics, 2002.

Honeywell Instrumentation Data Sheet #10.14–3a, "Continuous Measurement and Control of Density," Morristown, NJ, latest edition.

Magaris, P., "On-Line Density Measurement Is Fast and Accurate," *Control Engineering,* June 1981.

"Standard Practice for Calibration of Transmission Densitometers," *ASTM Standard,* 1998.

© 2003 by Béla Lipták

6.10 Gas Densitometers

C. H. HOEPPNER (1982) **B. G. LIPTÁK** (1969, 1995)
C. G. LANGFORD (2003)

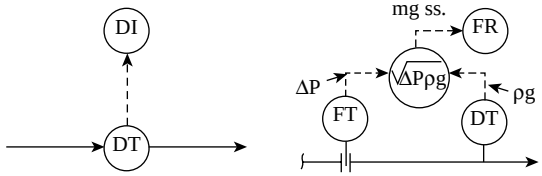

Flow Sheet Symbols

Types:	A. Displacement (buoyancy gas balance) A1. Specific gravity detector at ambient conditions A2. Density sensor of gases under pressure A3. Electromagnetically suspended dumbbell B. Centrifugal C. Fluid dynamic (jet backpressure) D. Gas column balance (hydrostatic head manometer) E. Thermal conductivity D. Viscous drag G. Vibrating design discussed in Sections 6.5 and 6.8 H. Ultrasonic density
Design Pressure:	A. Up to 1500 PSIG (103 bars) D, E, F, H. Generally atmospheric G. Up to 3000 to 5000 PSIG (207 to 345 bars [see Sections 6.5 and 6.8])
Design Temperature:	D, E, F. Generally ambient G. –13 to 500°F (–25 to 260°C) for Section 6.8; –400 to 400°F (–240 to 204°C) for Section 6.5 H. –40 to 450°F (–40 to 230°C)
Materials of Construction:	A, B. Aluminum, cast iron, steel, and stainless steel C. Stainless steel D, E, F. Pyrex, brass, nickel, Monel, and stainless steel G. Ni-Span C, stainless steel, Hastelloy, tantalum, titanium, zirconium, Incoloy, borosilicate glass, Tefzel lining (see Sections 6.5 and 6.8) H. Corrosion resistant
Minimum Span (SG values based on air):	C. Detects gases at molecular weights from 2 to 100 E. 0.5 SG F. 0.1 SG G. About 20 times the error (see Sections 6.5 and 6.8) H. 2 to 120 Mw
Inaccuracy (SG values based on air):	A1, A3. 1 to 2% of span A2. 0.25% of span B. 0.1 to 0.5% of span C. 2% of span D. 0.001 SG E. 0.01 SG F. 1 to 2% of span G. Typically 0.002 SG (see Sections 6.5 and 6.8) H. 1.8%
Costs:	F $7000 to 12,000 G. From $4000 to $25,000 (see Sections 6.5 and 6.8) H. About $20,000

© 2003 by Béla Lipták

Partial List of Suppliers: (including the vibrating types, which are discussed in Section 6.8, for suppliers of Coriolis-type densitometers, see Section 6.5)
ABB Inc. unit F&P (www.us.abb.com)
Alternate Energy Systems Inc. (www.graviblend.com)
Anton Paar USA (www.anton-paar.com)
Chandler Engineering (www.chandlereng.com)
Foxboro-Invensys (www.foxboro.com)
Gow-Mac (www.gow-mac.com)
Panametrics (www.panametrics.com)
Sarasota (www.thermomeasurement.com)
Schlumberger Industries (www.slb.com)
Solartron Mobrey (www.solartronmobrey.com)
Thermo Measurement Ltd. (www.thermomeasurement.com)
Yokogawa Corp. (www.yca.com)

INTRODUCTION

This section gives a historical perspective on gas density measurement techniques, including the mechanical designs, which have been widely used in the past, but have lost their popularity or have been completely discontinued. This is due to their moving parts and their associated high maintenance. This trend toward solid-state instrumentation is a general trend throughout the industry, and in the case of gas densitometers, it resulted in the proliferation of oscillating and vibrating sensors. These are discussed separately in Sections 6.5 and 6.8, but some of their features and suppliers have been also mentioned in the feature summary above under type G, for the reader's convenience.

THEORY OF OPERATION

Gas density measurement relies on some of the same laws of physics that are used in liquid density measurement. Liquids have typical densities on the order of 40 to 80 lbm/ft^3 (600 to 1300 kg/m^3); gases have densities on the order of 0.05 to 0.5 lbm/ft^3 (0.8 to 8.0 kg/m^3). The methods used include the weighing of a known volume either passively or actively. Passive weighing is measuring the static forces created by gravity. An example is a laboratory balance.

Active weighing is the process of moving or shaking the volume and determining the density from the required acceleration or the Coriolis forces (Section 6.5) or container displacement, or the oscillation frequency (Section 6.8). Another scheme varies the gas pressure until the buoyancy force is equal to that air at atmospheric pressure; at this condition, the ratio of the absolute pressures equals the specific gravity (SG). The speed of sound through a gas is inversely proportional to the square root of the density and this relationship has been used. Thermodynamic properties, such as heat capacity, have been used as the basis of instruments. Gas jet deflection has been used; gas jet impact pressure recovery is also sensitive to gas density. The centrifugal fan laws can be the basis for measuring density—see any mechanical engineering handbook. The head pressure generated is a function of the gas density.

Density is mass per unit volume. Relative density (also called specific gravity) is the ratio of the density of a gas to that of air at the same temperature, pressure, and moisture content. Confusing absolute density with specific density can have disastrous effects on engineering calculations and designs. The relative density is equal to the ratio of molecular weights of the gas and of air, which is usually taken as 28.9644. The density of an ideal gas can be calculated from its specific gravity (or molecular weight), the absolute temperature, and the absolute pressure, because equal numbers of moles of gas occupy equal volumes. See Section 6.1 for details.

To avoid redundancy, some of these devices, such as the vibration-based devices (Section 6.8) and Coriolis-type (Section 6.5) designs, are not covered here.

Gas density measurement is of interest for several different reasons. Density compensation is used to correct some flowmeters that are sensitive to density. For this purpose, it is preferred to measure the actual gas density at the flowing pressure and temperature. A flow computer is often used for this purpose when the measurement has sufficient value.

The other major use is to infer or to determine composition. Specific gravity relative to air is most conveniently measured at or near atmospheric conditions. Some of the designs, such as the displacement, centrifugal, and fluid dynamic designs, may also operate at higher pressures and can measure either specific gravity or actual density. Orientation Table 6.1a provides an overview of the capabilities of the different designs.

DISPLACEMENT-TYPE DENSITOMETERS

The buoyant force exerted upon a body immersed in a gas is proportional to the density of that gas. If the gas is at ambient conditions, the buoyant force is a measure of the molecular weight or specific gravity of the sample.

The principle is demonstrated in Figure 6.10a. It consists of a chamber containing a balance beam with a glass cylinder

© 2003 by Béla Lipták

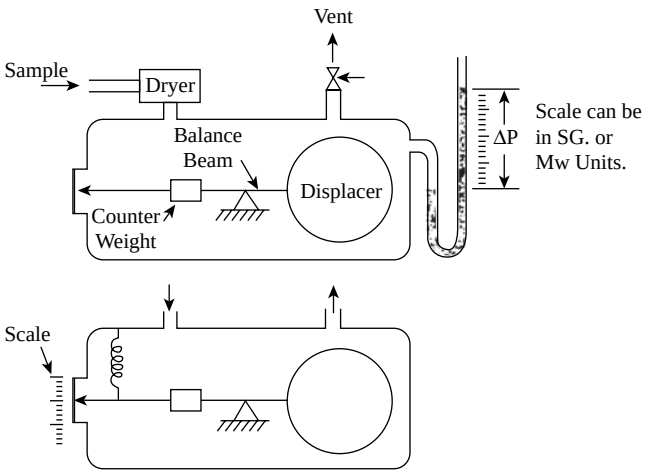

FIG. 6.10a
Displacement-type manual density gauges.

on one end and a counterweight on the other. The manual version requires first filling the chamber with dry air until the beam just balances and noting the corresponding air pressure P_a as shown on the manometer. Then the chamber is evacuated and filled with sample gas, increasing the pressure until the beam is once more balanced. This gas pressure P_g is noted and the specific gravity of the sample gas is calculated as the ratio of the two pressures is converted to absolute and measured in the same units. Pressures are normally moderate and any deviation from the ideal gas laws should not create errors.

$$SP_g = \frac{P_g}{P_a} \qquad \textbf{6.10(1)}$$

It is not necessary to balance the unit in air each time the gauge is used; once it has been balanced, the manometer scale can be calibrated in either molecular weight or specific gravity units. The sample molecular weight is determined by:

$$M_{wg} = M_{wa}\frac{P_g}{P_a} \qquad \textbf{6.10(2)}$$

This sort of instrument is no longer made and is included in this discussion for completeness of the discussion and to illustrate the applied physics.

The lower drawing in Figure 6.10a shows a variation on this design. Here the arc through which the beam swings is the measure of sample density and is indicated on the calibrated scale. If the bulb and beam are balanced in air and the gas sample introduced is at the same pressure, temperature, and humidity as the balancing air, then the gauge can read out either in specific gravity or in molecular weight units. This instrument is no longer available.

The sensors shown in Figure 6.10a operate on the buoyancy gas balance principle, where the buoyant forces of air

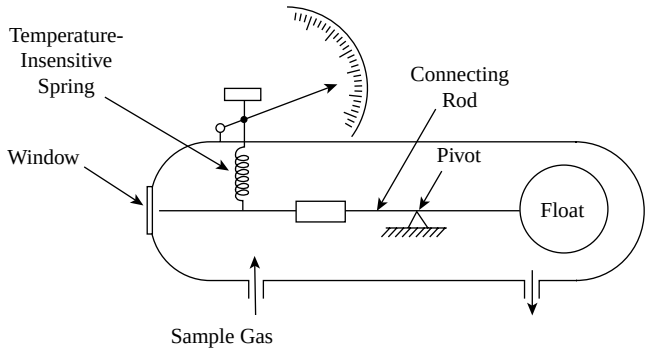

FIG. 6.10b
Manual gas density sensor.

and gas are compared. In the upper instrument, the operating pressure is adjusted until the gas density is the same as the reference air. In the lower instrument, the calibration accuracy is a function of the calibration of the measuring balance. The accuracy of measurement is largely a function of eliminating those factors (pressure, temperature, humidity) that can influence density. If the air and gas are compared under identical conditions then the accuracy can be as great as ±0.0002 SG. These sensors are used for high-precision laboratory measurements. Their main drawback is that they cannot be adapted for continuous measurement. Issues such as the humidity of the reference air and the sample gas must be addressed. Some instruments use desiccant dryers to take water from the air and the sample.

Continuous Units for Pressurized Operation

The densitometer shown in Figure 6.10b measures the gas density at actual flowing conditions. The effects of process pressure, temperature, super-compressibility, or specific gravity changes are eliminated and the density is measured directly. Archimedes' principle is that the buoyant force on a float (displacer) is a function only of the fluid density surrounding the float.

The manually operated version of this gauge is illustrated in Figure 6.10b. It consists of a buoyant float attached to one end of a pivoted beam and a temperature-insensitive spring attached to the other end. The spring tension in this case is adjusted manually using a micrometer until the beam is brought into a null position. The readout linkage is attached to the spring and provides linear density data. These are no longer available.

Besides the manual method described above, the spring tension can be adjusted by pneumatic relays or electric motors. Figure 6.10c shows an electronic densitometer transmitter. This is no longer available, but instruments may still exist.

For accurate measurement of flowing density, the sample must be at the same operating conditions as in the process line. This is improved with the use of short (close-coupled) sample lines and by relatively high sample flow rates (10 SCFH, or 280 1/hr) and good thermal insulation.

© 2003 by Béla Lipták

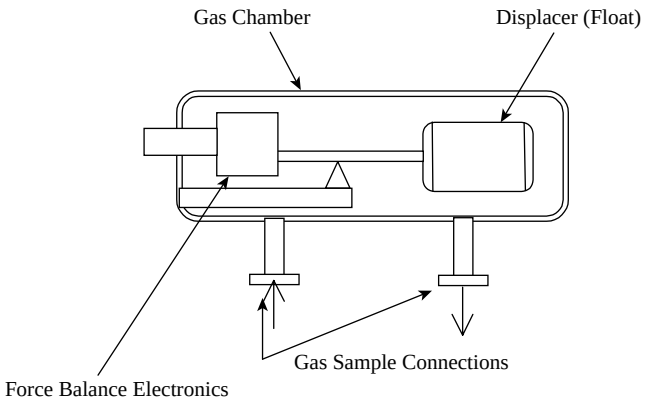

FIG. 6.10c
Continuous gas density sensor electronic transmitter.

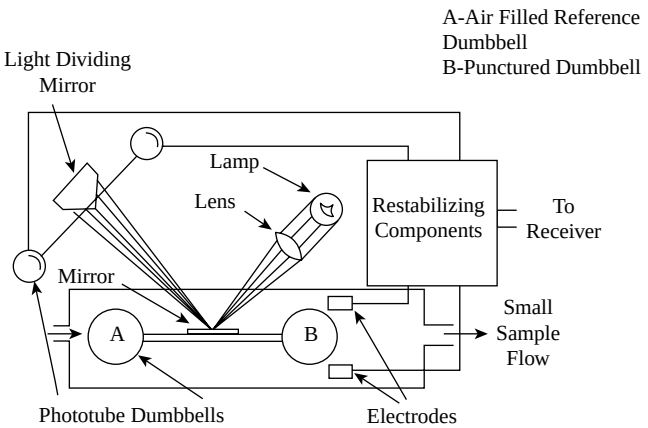

FIG. 6.10d
Electromagnetic suspension-type sensor.

Spans from 1.0 to 25.0 lbm/ft^3 (16 to 400 kg/m^3) can be obtained for measurements at 0.25% of full-scale accuracy.

Electromagnetic Suspension-Type Units

The main working component of this detector is a small dumbbell supported on a quartz fiber. One of the spheres on the dumbbell is sensitive to buoyancy effects (changes in gas density); the other is not. Insensitivity to buoyancy is achieved by puncturing that sphere (see Figure 6.10d).

A mirror fixed to the dumbbell axis reflects a light beam to a dividing mirror that splits the beam equally between two photocells. A change in gas density tends to rotate the dumbbell, causing the light to be unevenly divided between the photocells. Therefore, the signals produced by the photocells will differ; when this difference is amplified it can be applied to recenter the dumbbell. This is achieved by applying a new electrical potential to the electrodes that generate the electrostatic field around one of the spheres. The sphere is made conductive with a coating of rhodium. Measuring the electrical potential required to stabilize the dumbbell gives a linear indication of the torque created by the differential buoyancies, which in turn is an indication of sample density. If the sample is at ambient conditions, the instrument scale can be calibrated in specific gravity or molecular weight units.

In contrast with the manual displacement units, these detectors are adaptable for continuous measurements and generate output signals for remote readout. They are available with spans of 0.01 to 2.0 SG based on air with ±1% full scale accuracy. Single-range units have a total span of 1.0 SG, and multirange designs are available with a 5:1 range ratio. The measurements are performed at near-atmospheric pressures and ambient temperatures, utilizing sample flow rates in the 50 to 500 cc/min range. Depending on this flow rate, the 95% response time of the detector varies from a few seconds to 1 min. Due to the small openings and the optical parts involved, the sample gas must be clean upon entering the sensing cell. This detector is compensated for barometric changes and is manually calibrated on air or other reference gases.

This device was selected for those installations where high precision overrides the cost considerations. This instrument is no longer made.

CENTRIFUGAL GAS DENSITY SENSORS

The centrifugal detector also measures the gas density at flowing pressure and temperature conditions. As shown in Figure 6.10e, a small centrifugal blower operating at constant high speed (3000 to 13,000 r/min) extracts a small sample of gas from a tank or pipeline. The impeller is driven by magnetic coupling to allow removal of the driver and to prevent gas leakage. Gas enters the impeller at the center and is thrown outward by centrifugal force. This action creates a pressure differential across the impeller which is directly proportional to the gas density. The differential pressure (d/p) can be indicated locally or used as the input signal into a d/p transmitter for remote readout.

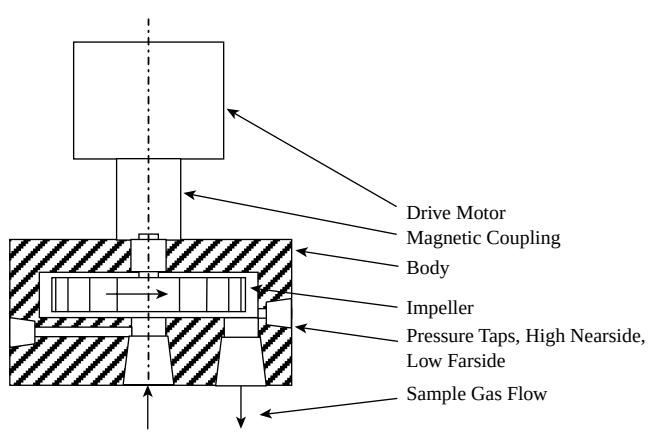

FIG. 6.10e
Density detector with centrifugal element.

© 2003 by Béla Lipták

Some designs can be close-coupled around an orifice plate in the pipeline; others can be installed directly in tanks or pipes.

When the gas sample is dirty, deposits may accumulate in the unit, affecting the sample flow rate. This will not influence the measurement accuracy until the material buildup becomes substantial.

Errors can be introduced by temperature differences between the process and the density chamber. This temperature difference may be caused by the difference between ambient and process temperatures and also by the motor and friction heat developed in the sensor. The error can be as high as 0.1 or 0.2%/°ΔF. In most installations, close-coupling and insulating the detector is sufficient. In the case of critical measurements, the process and chamber temperatures are detected and automatic correction is applied for the difference.

Available density spans vary from 1.0 to 20 lbm/ft^3 (16 to 300 kg/m^3) with full-scale inaccuracies at ±1% or less. Repeatability can be as good as ±0.05%.

Wetted components are available in cast iron, aluminum, steel, or stainless steel. The detectors can be exposed to pressures up to 2000 PSIG (14 MPa) and temperatures up to 300°F (149°C).

The maximum pressure differentials developed by the blower are a function of the impeller size selected, speed of rotation, and density span. The differential varies between 30 and 100 in. H_2O (7.5 to 25 kPa). The relationship between density and pressure differential developed is linear within the range of 5:1. This technology has been replaced by the vibrating sensor type.

FLUID DYNAMIC DENSITOMETER

The fluid dynamic densitometer (Figure 6.10f) is used to measure the densities of gases and liquids. It is composed of two chambers (A and B) each having a supply nozzle (C_r and C_m) and an opposing receiver port (D_r and D_m). One chamber is used as a reference chamber having only a small outlet port; it is filled with a suitable supply of nitrogen or other fluids (E) such that the dynamic pressure (P_r) of this jet on the receiver port (D_r) serves as a reference value. Directly adjacent to this reference chamber is a similar measuring chamber (B) that has large inlet and outlet ports through which the measured fluid is pumped by the action of the same supply fluid (E). The product whose density is to be measured, being entrained by this supply jet, affects the dynamic pressure (P_m) of this jet on the receiver port, which is inversely proportional to the density. A comparison of the pressure differential produced between the reference chamber and the measurement pressure is a measure of the density of the unknown product.

The fluid dynamic densitometer can be used for measurement of density of process stream and effluents in both liquids and gases. It has no moving parts, a very high sensitivity, and a high rate of response, but it is not particularly suitable for non-Newtonian fluids. It can be made of a wide variety of materials and can be mounted directly in a body or stream of fluid to give precise point measurements. Thus, petroleum and petrochemical refineries, natural gas processing plants, ethylene production, chemical process plants, and the pulp and paper industry are typical applications. There are other embodiments of the general principle of a gas jet and recovered pressure. These seem to be no longer available—another victim of the vibrating sensor. The design described above is only one of a number of schemes that have been used.

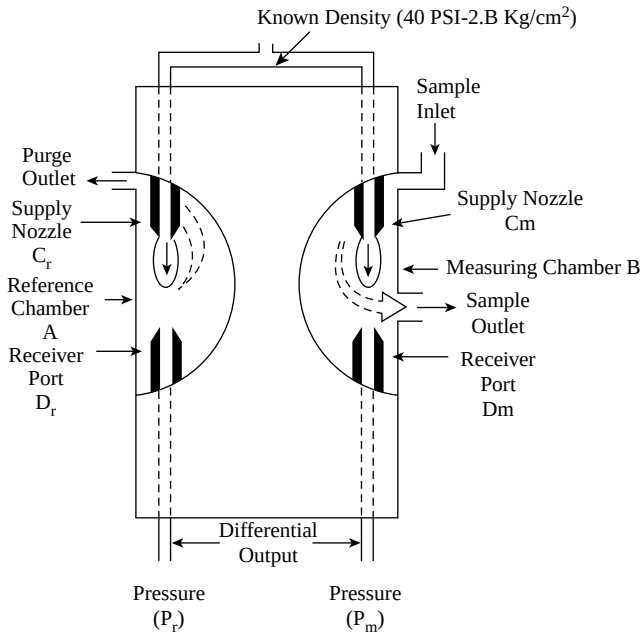

FIG. 6.10f
Fluid dynamic density meter.

GAS COLUMN BALANCE SENSORS

As their name implies, these instruments operate on the principle of measuring the difference in weight between a column of gas and a column of air of equal heights and pressures.

As shown in Figure 6.10g, the gas sample flows continuously to the interior of the oil-sealed working bell on the right and then leaves the bell through a column of set height into the atmosphere. At the same time, dry air enters the interior of the reference bell and exits to the atmosphere through a column of equal height. The weight of gas and air in the columns exerts an upward force on the bells, and the difference in weight between the two columns is the force, which causes the beam movement. Beam movement is resisted by the weight of a pendulum, which allows the pen mechanism to move in direct ratio to the specific gravity of the gas flowing through the unit.

The sample flow rate is 2 SCFH (0.9 l/m) or less at near-atmospheric pressure, limited by the oil seal in the unit.

© 2003 by Béla Lipták

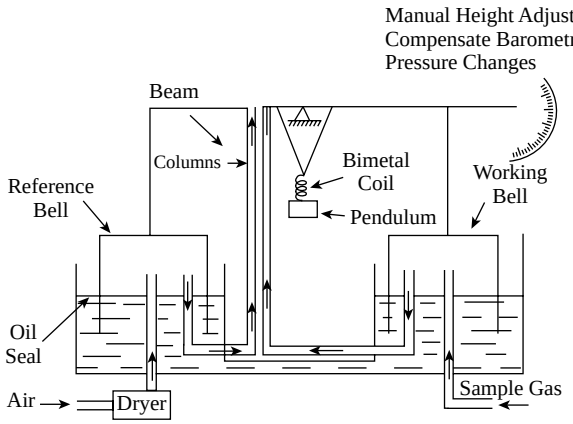

FIG. 6.10g
Gas column balance density gauge.

This corresponds to an approximate measurement time lag of 3 min. Available spans vary between 0.25 and 1.0 SG, and ranges can be selected between 0 and 2.5 SG, based on air. Detection accuracy is ±0.002 SG.

The wetted parts can be made of brass or stainless steel, and a large number of accessories and features are available, including direct recorders, controllers, and transmitters of both electronic and pneumatic types.

Whenever the basis of operation for a density sensor is to compare the gas sample to air in arriving at a specific gravity reading, it is important to compensate for the following:

1. Ambient temperature variations
2. Barometric pressure variations
3. The moisture content of the air

The sensor illustrated on Figure 6.10g is provided with an automatic temperature compensator. This is a bimetallic coil calibrated to shift the pendulum weight center of gravity in direct ratio to the temperature effect on the density. Therefore, regardless of the ambient temperature variations, the specific gravity readout is always based on 60°F (16°C).

The forces acting on the working bell are very small. At 0.5 SG, the total resulting pressure head is 0.036 in H_2O (9 Pa), and the instrument sensitivity of 0.002 SG corresponds to only 0.00014 in. H_2O (0.04 Pa). With such sensitivity, even barometric pressure variations are sufficient to introduce an error. As an example, a change of 0.5 in. Hg (0.065 kPa) in the barometric pressure can result in an error of 1%. Compensation can either be by manual adjustment of column height or by use of an aneroid barometer that automatically corrects for barometric pressure changes.

When air contains moisture, its density at the same barometric pressure is less than what it would be under dry conditions. Changes in humidity have a very definite effect on measurement precision. Therefore, a silica gel drier is installed to keep the reference air purge dry.

From the above discussion, it is clear that this detector can automatically correct its readings for humidity, temperature, and barometric pressure variations. These are no longer manufactured.

THERMAL CONDUCTIVITY DENSITY GAUGES

Thermal conductivity-type sensors are also discussed separately in Section 8.12 and also under Section 8.57. Because the thermal-type elements are most frequently used as analyzers or as components in analyzer systems, their coverage here will be brief and limited to that design that is suitable for direct specific gravity detection.

Figure 6.10h illustrates a design that is suitable for both gas chromatography and on-stream molecular weight determination. A pneumatic Wheatstone bridge with two hot-wire detectors is mounted in the vertical plane. The reference gas tends to cool the thermistors and, as long as the flow is balanced, the two detectors are equally cooled. When a sample gas is introduced, it will upset the system balance if its molecular weight is different from that of the reference gas. Zero balance is checked by introducing the reference gas as sample. If the sample gas is lighter than the reference gas, the sample molecules will tend to rise, partially obstructing the reference gas flow at detector #1, and, therefore, causing a temperature rise at that point. Simultaneously, a corresponding increase of reference gas flow will be experienced at detector #2, causing a drop in temperature at that point. The temperature difference between the two thermistors is a measure of the sample gas molecular weight.

The reference gas selected should have sufficient difference in density from the sample for accurate measurement, and preferably have high molecular weight, high heat capacity, and low viscosity. Nitrogen, argon, or carbon dioxide tend to satisfy these requirements. The sample flow is normally

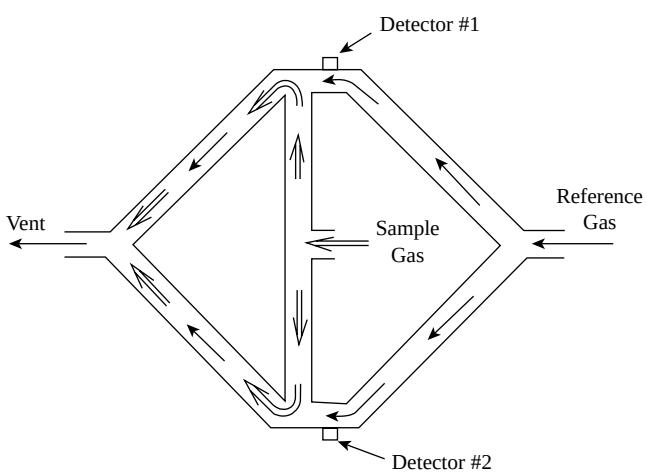

FIG. 6.10h
Thermal gas density sensor.

© 2003 by Béla Lipták

maintained at about 10 cc/min, while the reference flow is set at about 10 times that to avoid back-diffusion.

The main advantage of this design is that the sample gas never comes in contact with the detectors, and, therefore, they cannot become coated, coked, or contaminated by the sample. Another desirable feature is that the cell contains no moving parts.

Due to the tubular design, brass, stainless steel, Monel, or nickel construction materials can be provided without substantial difference in cost.

Variations in ambient temperature can introduce errors. Therefore, the cell temperature is normally controlled within ±1°F (±0.6°C).

VISCOUS DRAG-TYPE DENSITY SENSORS

Another method of detecting the density of a gas relative to air (specific gravity or molecular weight) is illustrated in Figure 6.10i.

The unit consists of a sample chamber and an air chamber with a motor-driven impeller and an impulse wheel in each. Impeller #1 draws in air and spins it against the vanes of impulse wheel #3, creating a clockwise torque proportional to the air density. Impeller #2 draws in the gas sample and sets it in a counterclockwise rotation. The whirling gas strikes the impulse wheel #4 and imparts a counterclockwise torque to its shaft proportional to the gas density. The difference between the opposing torques is a measure of the sample specific gravity. It is transmitted through a lever and linkage arrangement to the pointer, which moves in front of the scale, which is calibrated in specific gravity, molecular weight, or percent concentration units.

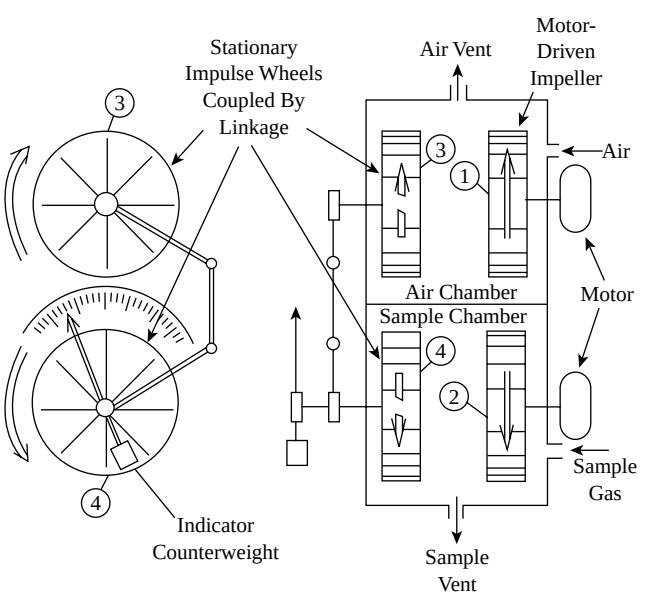

FIG. 6.10i
Viscous drag density sensor.

As in the case of the previously discussed detectors, the sample temperature, pressure, humidity, and solid particle content will affect the precision of measurement.

The sample gas temperature should be the same as that of ambient air. This is normally guaranteed by the large surface area of the sample tubing that brings the gas temperature to ambient without need for auxiliary devices.

Because both the gas and air are vented to atmosphere, the barometric pressure variations are automatically balanced.

If the sample gas is under pressure, it has to be reduced to less than an inch of water pressure before entering the instrument. If it is under vacuum, the two exhausts must be connected into the same vacuum system.

The relative humidity of air and gas should be the same. This can be achieved either by saturating both streams with a humidifier or by drying both streams through a desiccant dryer.

Sample filters are normally used to remove suspended particles or corrosive constituents because the wetted parts are not highly corrosion-resistant. Brass, aluminum, and stainless steel are in contact with the sample.

The sample flow rate of about 20 SCFH (9 l/m) provides a response time of less than 20 s.

Spans from 0.1 to 2.0 SG are available within the limits of 0.1 and 3.0 SG. The measurement inaccuracy varies between 1 and 2% of full scale, and the unit is normally calibrated on the actual sample gas.

This instrument can still be obtained as an indicator, recorder, switch, or transmitter.

ULTRASONIC DENSITY DETECTION

Some models of transit time ultrasonic flowmeters (see Section 2.26) include the ability to report density. Typical applications are for vent and flare stacks. Costs are high and the user should review the claimed specifications for suitability.

CONCLUSIONS

Of the mechanical measurement technologies reviewed in this section, only one—the viscous drag-type sensor is still available. The vibrating surface type devices now dominate the market (see Sections 6.5 and Section 6.8). The high value of natural gas has led to the use of gas chromatographs and Btu analyzers to determine the value of the gas from composition and/or the heating value of fuel gases for a more accurate measurement of value and flow than the composition inferred from density instruments. The American Society for Testing and Materials' "Standard Test Methods for Relative Density of Gaseous Fuels (ASTM D-1070)" includes operating procedures for some of these older instruments.

© 2003 by Béla Lipták

Bibliography

Anders, D., "BTU Analysis Using a Gas Chromatograph" Daniel Measurement and Control, Houston, TX,

American Society for Testing and Materials, "Standard Test Methods for Relative Density of Gaseous Fuels," ASTM D-1070, West Conshohocken, PA, 1985 (reapproved 1998).

Capano, D., "The Ways and Means of Density," *InTech*, November 2000.

"Density and Specific Gravity," *Measurements and Control*, October 1993.

Greene, G., "Measure and Sell Gas by the Pound," *Pipeline Industry*, February 1967.

Hubbard, A.B., "Density Measurement and Its Application to Orifice Metering," 23rd Annual Appalachian Gas Measurement Short Course, August 26, 1963.

Magaris, P., "On-line Density Measurement Is Fast and Accurate," *Control Engineering*, June 1981.

November, M.H., "Measuring Fluid Density and Specific Weight," in *Instrumentation Insight*, Norfolk, VA: ITT Barton, August 1975.

"Standard Practice for Calibration of Transmission Densitometers," *ASTM Standard*, 1998.

© 2003 by Béla Lipták

Safety and Miscellaneous Sensors

7

7.1
Boroscopes 872

Introduction 872
Illuminated Rigid Fiber Boroscopes 873
Flexible Illuminated Fiberscopes 873
Special-Purpose Systems 874
Bibliography 874

7.2
Electrical and Intrinsic Safety 875

Introduction 876
Enclosures 876
NEMA Terminology 876
IP Terminology 877
Fuses and Circuit Breakers 877
Grounding 877
Personnel Safety 878
Energy Levels 878
Explosion Hazards 878
NEC Definition of Hazardous Locations 879
IEC Definition of Hazardous Locations 880
Explosions 880
Protection Methods 881
Advantages and Disadvantages of Protection Methods 881
Safety 881
Cost of the Instrument 881
Cost of Installation 881
Maintenance 882
Flexibility 882
Purging, Pressurization, or Ventilation 882
Air Supply 882
Initial Purging 883
Pressure 883
Alarms and Interlocks 883
Classification of Purging Systems 883
Explosion-Proof Components 883
Intrinsic Safety 884
Energy Levels 884
System Approach 884
Certification of Intrinsic Safety 884
Circuit Analysis 885
Evaluation 885
Construction Review 886
International Regulations 886
Grounding 886
Barriers 886
Cables and Their Installation 886
Terminations 886
References 887
Bibliography 887

7.3
Electrical Meters and Sensors 889

Introduction 890
Analog Measuring Instruments 890
Permanent Magnet Moving Coil Instruments 892
Electronic Components 892
Moving Iron Vane Instruments 893
Electrodynamic Instruments 893
Electrostatic Instruments 893
Digital Measuring Instruments 894
Wattmeters 894
Utilization of Electrical Meters 894
Current Measurement 894
AC Current 894
Current Transformers 896
Primary Turns 896
Secondary Turns 896
Polarity and Inaccuracy 897
Hall Effect Probes 897

© 2003 by Béla Lipták

DC Current 897
Ammeter Shunts 897
Voltage Measurement 898
AC Voltage 898
Potential Transformers 898
DC Voltage 898
Voltmeter Resistors 899
Power Measurement 899
AC Power 899
Single Element Wattmeters 899
Multielement Wattmeters 900
DC Power 901
Meter Scales 901
References 901
Bibliography 901

7.4
Energy Management Devices (Peak Load Shedding) 903

Introduction 903
Load Shedding Systems 903
Peak Shedding System Costs 904
Electrical Demand 904
Demand Load Shedding 904
Start Signals for Demand Periods 905
Shedding Controls 905
Electromechanical Devices 905
Electronic Demand Limiters 905
Digital Systems 905
Conclusions 906
Bibliography 906

7.5
Excess Flow and Regular Check Valves 908

Introduction 908
Valve Designs 908
Operation 908
Applications 909
Rupture Disc Leakage 909
Gas Station Application 910
Sizing 910
Installation 910
Testing 910
Bibliography 910

7.6
Explosion Suppression and Deluge Systems 912

Introduction 912
Explosion Suppression Systems 912
Explosions 913
Explosion Bomb Test 913
How Suppression Works 913
Explosion Characteristics 914
Suppressant Chemicals 914
Explosion Suppression Hardware 915
Detectors 915
Temperature 915
Infrared Radiation 915
Ultraviolet Radiation 915
Pressure 915
Control Units 916
Actuated Devices 916
Suppressors and Extinguishers 916
Explosive-Actuated Rupture Discs 916
Other Auxiliary Units 917
Applications 917
Ultra-High-Speed Deluge Systems 917
Detectors 917
Control Units 917
Actuated Devices 917
High-Speed Deluge Valve System 918
Pressure-Balanced Nozzle System 918
Applications 918
Bibliography 919

7.7
Flame Arresters, Conservation Vents, and Emergency Vents 920

Introduction 921
Types of Vents 921
Conservation Vents 921
When to Use Conservation Vents 923
Determination of Required Capacity 923
Sizing 924
Emergency Vents 925
Dessicating Vents 925
Flame Arresters 926
Bibliography 927

7.8
Flame, Fire, and Smoke Detectors 928

Introduction 929
Fire and Smoke Detectors 929
Smoke Detectors 929
Ionization Chamber Sensors 929
Photoelectric Sensors 929
Thermal Sensors 929
Flame Sensors 929
Types of Optical Flame Sensors 930
Ultraviolet Detectors 930
Infrared Detectors 931
UV/IR Detectors 931
Dual IR 931
Multispectrum IR 931
Closed Circuit Television 931
Flame Safeguards (Burner Management) 931
Heat Sensors 931
Conduction-Type Detectors 932
Rectification 932
The Rectification Phenomenon 932
Radiation Types 932
Visible Radiation 932
Cadmium-Sulfide Photocell 933
Infrared Radiation 933
Lead-Sulfide Photocell 933

© 2003 by Béla Lipták

Ultraviolet Radiation 933
Installation 933
Conclusions 934
Flame Guards 934
Optical Fire Detectors 934
Bibliography 935

7.9
Leak Detectors 936

Introduction 937
Aboveground Leak Detection Methods 937
Pressurization or Hydrostatic Testing 937
Using Paints, Dyes, or Bubble Emission 937
Combustible or Toxic Leaks 938
Personnel Alarms 938
Ultrasonic Detectors 938
Thermal Conductivity Detectors 939
Halogen Detectors 939
Other Techniques 940
Loss of Vacuum 940
Thermography 940
Mass Spectrometer 940
Underground Leakage Detection 940
Level Monitoring 940
Soil Detectors 940
Aspirated Sensors 941
Standpipe Detector 942
References 942
Bibliography 942

7.10
Linear and Angular Position Detection 944

Introduction 945
Applications 945
Mounting 945
Sensor Types 945
Potentiometric Sensors 945
Voltage and Current Methods 945
Advantages and Limitations 946
Linear Variable Differential Transformer Type Sensors 946
Magnetostrictive Sensors 946
Hall Effect Sensors 947
Rotary Sensor 948
Transmitters 948
Encoder Type Sensor 948
Transmitter Technologies 949
Analog Transmitters 949
Fieldbus Transmitters 950
Bibliography 950

7.11
Machine Vision Technology 951

Introduction 951
Linear Diode and Linear Charge-Coupled Device Arrays 952
Example Project 953
Two-Dimensional CCD and Diode Arrays 953
Analog Display Modes 953
Serial Data Transmission 954
Vector Graphics Formats 954
Computer Graphics and Machine Vision 954
References 954

7.12
Metal Detectors 955

Introduction 955
Detector Types 956
Installation on Conveyor Belts 956
Other Applications 956
Bibliography 957

7.13
Noise Sensors 958

Nature of the Measurement 958
Transducer Principles 959
The Inductive Principle 959
The Moving-Conductor Principle 959
Dynamic Microphones 960
Capacitor Microphones 960
Piezoelectric Microphone 960
Microphone Types 960
Ribbon Microphone 960
Diaphragm Microphone 960
Special Microphones 960
Parabolic Reflector Microphone 961
Special Purpose and Ultrasonic Units 961
Microphone Characteristics 961
Sound Sensitivity, Incidence, and Direction 961
Frequency and Amplitude Ranges 962
Hydrophones 962
Environmental Considerations 962
Calibration 963
Reference 963
Bibliography 963

7.14
Proximity Sensors and Limit Switches 964

Introduction 965
Capacitive Sensors 965
Inductive Sensors 966
Magnetic Sensors 967
Hall-Effect Sensors 967
Linear Variable Differential Transformer Sensors 967
Mechanical Limit Switches 968
Optical Sensors 968
Light Sources 969
Light Detectors 969
Optical Detector Installations 969
Reflective 969
Retroreflective 970

© 2003 by Béla Lipták

Optical Fibers 970
Pneumatic Sensors 970
Ultrasonic Sensors 970
Digital Outputs and Encoders 971
Applications 971
Bibliography 972

7.15 Relief Valves—Determination of Required Capacity 973

Introduction 973
Applicable Codes and Standards 973
ASME Codes 973
Excerpts from ASME Code 973
UG-125(c) 973
UG-126(b) 974
UG-126(c) 974
UG-126(d) 974
UG-131(d)(1) 974
UG-133(a) 974
UG-133(b) 974
UG-134(d)(1) 974
UG-134(d)(2) 974
API Standards and Recommended Practices 974
NFPA Codes 974
OSHA Codes 975
Causes of Overpressure 975
Substituting for Pressure Relief Devices 975
Fire Protection 975
Gas-Filled Tanks 975
Heat Absorption Across Unwetted Surfaces 975
Low Liquid Inventory Tanks 976
Heat Flux Across Wetted Surfaces 976
Total Heat Absorption 976
API Recommendation 976
NFPA Recommendations 976
Low-Pressure Tanks 977
Free Air Calculation 978
Wetted Area (A) 979
API or NFPA 981
Tank Shape 981
Fire Zone 981
Fire Height 981
Vertical Tanks 981
Horizontal Tanks 982
Environmental Factors 982
API's Environmental Factors 982
API and NFPA Environmental Factors 982
Calculating the Relieving Capacity 983
Latent Heat of Vaporization 983
Protecting Liquid-Full Tanks 983
Fluids at the Critical Point 983
Nonfire Protection Overpressure 983
Thermal Expansion 984
Set Pressure and Sizing 984
Blocked Outlet Conditions 984
Sizing the PRV 984
Process Equipment Considerations 984
Low-Pressure Storage Tanks 985
Thermal Venting Capacity 985
Heat Exchangers 985
Blocked-In Exchangers 985
Liquid Refrigerants 985
Gas-Fired Tubular Heaters 985
Tube Rupture 985
Pumps and Compressors 986
Sizing 986
Set Pressure 986
Distillation Towers 986
Pipe Headers 986
Bypass Valves 987
Chemical Reactors 987
Discharging the PRVs 987
Discharging to Closed Locations 987
Conclusions 988
Terminology and Nomenclature 988
References 989
Bibliography 990

7.16 Relief Valves—Sizing, Specification, and Installation 991

Introduction 992
The Nature of PRVs 992
The Purpose of PRVs 992
System Integrity and Noise 992
Reliability, Testing, and Redundancy 994
Safety Checklist 994
The Sizing of PRVs 994
Backpressure 994
Superimposed Backpressure 994
Built-Up Backpressure 995
Backpressure Effects 995
Sizing for Vapor and Gas Relief 996
Graphical Method 996
Sizing by Calculation 996
Critical Flow Sizing 997
Subcritical Flow Sizing 999
Backpressure Effect on Capacity 999
Sizing for Steam Relief 999
Sizing for Liquid Relief 1000
Calculating the Discharge Area 1000
Viscosity Correction 1001
Sizing for Flashing Liquid Relief 1001
Special Cases 1002
Specification and Selection 1002
Conventional PRVs 1004
PRV Bodies and Bonnets 1004
Seat and Spring 1005
Nozzles and Blowdown Rings 1005
Pop Action 1005
Valve Lift and Capacity 1005
Balanced PRVs 1005
Pilot-Operated PRVs 1005
Integral or External Pilot 1007

© 2003 by Béla Lipták

Advantages 1007
Disadvantages 1007
Modulating Pilot-Operated Valves 1008
When to Consider Pilot-Operated PRVs 1008
Specification and Selection Checklist 1009
PRV Operation and Performance 1010
Blowdown 1010
Setting the Blowdown 1010
PRV Chatter 1011
Chatter and Inlet Line Loss in POPRVs 1011
Chatter on Liquid Service 1011
PRV Tightness and Leakage 1011
Using Two PRVs 1011
Seat Designs, O-Rings, and Temperature 1012
Flatness and Cleanliness 1013
PRV Installation 1014
PRV Location 1014
PRV Mounting 1014
PRV Inlet Piping 1014
PRV Outlet Piping 1014
Calculating the Reaction Force 1015
PRV Block Valves 1015
Multiple PRVs 1015
Spare PRVs 1015
Test, Inspection, and Audit 1015
PRV Testing 1016
PRV Inspection 1016
PRV Audit 1016
References 1016
Bibliography 1016

7.17 Rupture Discs 1018

Introduction 1018
Definitions 1018
Code Requirements 1019
Rupture Discs vs. Relief Valves 1019
When to Use a Rupture Disc 1020
As a Primary or Sole Relief Device 1020
As a Supplemental Relieving Device 1020
Upstream of a Relief Valve 1021
Downstream of a Relief Valve 1021
Explosion Relief 1022
Rupture Disc Types and Features 1022
Nonfragmenting Discs 1022
Graphite Discs 1022
Vacuum Supports 1023
Back-Pressure 1023
Margin between Operating and Burst Pressures 1023
Dual Discs or Back-Pressure Loading 1024
Special Applications 1024
Pressure Cycling and Water Hammer 1024
Two-Way Relief 1024
Self-Cleaning and Corrosive Services 1024
Explosive Actuated Vents 1025
Selection and Specification 1025
Material Selection 1026
Burst Pressure and Manufacturing Range 1026
Operating Ratio 1027
Minimum Burst Pressure 1027
Disc Holders and Accessories 1027
Accessories 1028
Sizing 1028
Differences in Assumptions and Standards 1028
Coefficient of Discharge Method 1028
Resistance Method 1029
Combination Capacity Method 1029
Bibliography 1029

7.18 Soft Sensors 1030

Introduction 1030
Flow from Level 1030
Mass Flow from Pressure and ΔP 1030
Flow from Pump Speed and Power 1030
The Role of Networks 1031
Reasons for Using Soft Sensors 1031
Application Examples 1031
Detection of Instrument Failure 1031
Using Redundant Instruments to Advantage 1031
Sensorless Flux Vector Control 1032
Viscosity Control in Rubber Blending 1032
Determination of Errors 1032
Combining Instrument Errors 1032
General Expression for the Error 1032
Implementing the Error Calculation 1033
Digital Calculation Errors 1033
Digital Signal Processing 1033
Time Delay 1034
Implementation Considerations 1034
Integrators and Low-Pass Filters 1034
Low-Pass Filters 1034
Implementation Considerations 1034
Integrators 1035
Implementation Considerations 1036
Differentiators and High-Pass Filters 1036
Interpolation and Predictive Filters 1036
References 1037

7.19 Tachometers and Angular Speed Detectors 1038

Introduction 1039
Handheld Tachometers 1039
Tachometer Operating Principles 1039
Impulse Tachometers 1039
Optical Encoders 1040
Photoelectric Sensors 1040
Noncontacting Optical Tachometers 1040
Stroboscopic Tachometers 1041
Fiber-Optic Stroboscopes 1041
AC Tachometers 1041

© 2003 by Béla Lipták

DC Tachometer 1041
Induction Sensors 1041
Magnetic Sensors 1041
Inductive Sensors 1041
Hall Effect Sensor 1042
Magnetoresistive and Variable Reluctance Sensors 1043
Pneumatic Speed Transmitter 1043
Speed Switches 1043
Conclusions 1044
Bibliography 1044

7.20 Thickness and Dimension Measurement 1045

Introduction 1046
Dimension Measurement 1046
Automated Gauging Machines 1046
Thickness Gauging 1046
Contacting Gauges 1047
Ultrasonic Thickness Gauging 1047
Noncontacting Gauges 1048
Capacitance Gauges 1048
Laser Gauging 1049
Optical Micrometer and Interferometers 1049
Radiation Type Thickness Gauges 1049
Coating Thickness Detection by Radiation 1050
Bibliography 1050

7.21 Torque and Force Transducers 1051

Force Measurement 1052
Measurement Principles 1052
Mechanical Dynamometers: Load Cells 1052
Sensing Elements 1053
Strain Gauges 1053
Piezoelectric Dynamometers 1054
Torque Measurement 1055
Rotating Transducers 1055
Direct Contact 1056
Inductive Coupling 1056
Stationary Transducers 1057
Magnetostrictive Torque Transducer 1057
Angular Displacement Type Torque Transducers 1058
Conclusions about Torque Transducers 1058
Test Gauges and Test Stands 1058
References 1059
Bibliography 1059

7.22 Vibration, Shock, and Acceleration 1061

Introduction 1062
Acceleration as a Phenomenon and Dynamic Characteristics 1063
Vibration and Shock 1064
Periodic Vibrations 1065
Stationary Random Vibrations 1065
Nonstationary Random Vibrations 1065
Transients and Shocks 1065
Seismic (Inertial) Sensors 1065
Piezoelectric Sensors 1067
Piezoresistive and Strain Gauge Sensors 1068
Piezoresistive Sensors 1068
Strain-Gauge Sensors 1069
Electromechanical Sensors 1070
Coil-and-Magnetic Accelerometers 1070
Induction Accelerometers 1070
Capacitive and Electrostatic Sensors 1071
Electrostatic-Force-Feedback Accelerometers 1071
Capacitive Accelerometers 1072
Micro- and Nanosensors 1073
Velocity Sensors 1074
Noncontact or Proximity Sensors 1075
Mechanical-Magnetic Switches 1075
Optical Sensors 1075
Conclusions 1076
Reference 1076
Bibliography 1076

7.23 Weather Stations 1077

Introduction 1078
Meteorological Station 1078
Solar Radiation Measurement 1078
Historical Background 1078
Multijunction Thermopile 1079
Photovoltaic Cells 1079
Thermal Radiometers 1079
Pyrheliometers 1079
Wind Direction and Speed 1079
Wind Direction 1079
Wind Speed 1080
Rain Gauges 1080
Barometric Pressure Gauges 1081
Air Temperature Detection 1081
Dew Point and Relative Humidity Sensors 1081
Sensor Accessories 1081
Readouts 1081
Locations 1081
Instrument Shelters 1082
Bibliography 1082

7.24 Weighing Systems: General Considerations 1084

Introduction 1084
Weighing Glossary 1084
What is Weighing? 1086
Force and Weight 1087
Historical Considerations 1087
Advantages of Weighing 1087
Weighing Applications 1088

© 2003 by Béla Lipták

Weighing System Specification 1088
Weighing vs. Metering 1090
Bulk Weighing 1090
Weighing Platforms 1090
Weighing Platform Transducers 1090
Beam-Type Platforms 1091
Portable Platform Scales 1092
Truck, Monorail, and Railway Scales 1092
Truck Scales 1092
Treadle Scales 1092
Monorail Weighing Transducer 1092
Types of Weighing Systems 1093
Mechanical Lever Scales 1093
Spring-Balance Scales 1093
Load Cell Weighing 1093
Factors Influencing Performance 1094
Temperature Effects 1094
Mechanical Lever Scales 1094
Load Cell Weighing Systems 1094
Electronic Load Cells 1094
Hydraulic Load Cells 1094
Pneumatic Load Cells 1094
Errors Caused by Vibration 1094
Errors Caused by Ambient Conditions 1095
Maintenance Requirements 1095
Installation Requirements 1095
Vessel Stabilization 1095
Stabilizing Devices 1095
Piping Connections 1096
Types of Vertical Forces 1096
Spring Rates of Pipes 1098
Flexible Connections 1099
Calibration 1099
Bibliography 1100

7.25 Weight Sensors 1101

Introduction 1103
Load Cell Selection 1103
Selection Factors 1104
Mode of Loading: Tension or Compression 1104
Ambient Temperature 1105
Lateral Restraints 1105
Structure Vibrations 1105
Number of Load Cells 1105
Capacity and Type 1106
Load Cell Types 1106
Classes of Load Cells 1106
Load Cell Installation 1106
Load Cell Adapter 1107
Rocker Assembly 1108
Vessel Expansion 1108
I-Beam Flexure 1109
Expansion Assemblies 1109
Mechanical Lever Scales 1109
Balancing Devices 1109
Scale Ranges 1110
Applications 1110
Gravimetric Feeders 1110
Batch Additives 1110
Output Signals 1110
Advantages and Limitations 1110
Hydraulic Load Cells 1111
The Rolling Diaphragm Design 1111
Performance 1111
All Metal Design 1111
Hydraulic Totalizers 1112
Electronic Totalizers 1112
Other Features 1112
Pneumatic Load Cells 1112
Electronic Load Cells 1113
Strain-Gauge-Type Load Cells 1113
Operating Principle 1113
Design Variations 1114
Bending or Cantilever Elements 1114
Beam-Type Load Cells 1114
Shear Elements 1115
Direct Stress or Column-Type Elements 1115
Transducer Design 1116
Strain Gauge Backings and Bonding 1116
Strain Gauge Circuits 1116
Performance of Strain Gauge Load Cells 1117
Other Load Cell Designs 1117
Semiconductor Strain Gauge 1117
Nuclear Radiation Sensors 1117
Inductive Sensing 1118
Variable Reluctance Sensing 1118
Inductive and Reluctance Load Cells 1119
Magnetostrictive Sensing 1119
Magnetostrictive Load Cells 1119
Linearization of Load Cells 1120
Load Cell Housings and Safety 1120
Intrinsic Safety 1121
Special Application 1121
High Temperature Load Cells 1121
Weighing of Tank Legs 1121
Developing New Sensors 1121
New Load Cells 1122
Thin-Film Strain Gauges 1122
Hydraulically Damped Load Cells 1123
Microprocessors and Networks 1123
Interfacing with Programmable Logic Controllers 1123
The Role of the Personal Computers 1123
Verified Weighing with PCs 1123
Networks and Buses 1123
Calibration and Testing 1124
Aircraft Weighing 1124
Packaging Industry 1125
References 1125
Bibliography 1126

© 2003 by Béla Lipták

7.1 Boroscopes

D. H. F. LIU (1995) **B. G. LIPTÁK** (2003)

Applications:	Visual inspection of small, narrow or otherwise inaccessible areas in turbines, piping, engines, tanks, heating, ventilation, and air conditioning (HVAC) systems, boilers, pumps, valves, etc.
Types:	Units can be permanently mounted on bench top or can be portable; units can have battery-operated self-contained illuminators or rechargeable shoulder-pack illuminators; the probe itself can be rigid, flexible, gooseneck sheathed, or provided with a viewing end tip that can flex up to 120°.
Diameters:	From 0.118 to 2.75 in. (3 to 75 mm)
Lengths:	For rigid designs, from 3 in. to 150 ft. (76 mm to 45 m); for flexible designs, up to 96 in. (2.4 m)
Resolution:	Can identify flaws as small as 0.0005 in. (0.013 mm)
Field of View (FOV):	From 20 to 120°
Costs:	A portable fiberscope costs about $1500, a fiber-optic illuminator shoulder-pack costs about $800, and an articulating tip fiberscope costs about $3000. Units designed for an industrial environment can cost $10,000 or more.
Partial List of Suppliers:	Aims Ndt (www.aims.nl) Borescopes (www.boroscopes.com) Cole-Parmer Instrument Co. (www.coleparmer.com) Edmund Scientific Co. (www.edsci.com) ITI Instrument Technology Inc. (www.scopes.com) Karl Storz Endoscopy America Inc. (www.careers.ksea.com) Lenox Instrument Co. (www.thomasregister.com/olc/lenoxinstrument) Machida America Inc. (www.machidascope.com) Mitsubishi Cable America Inc. (www.mcausa.com) Olympus Co. (www.olympus.com) Schott Fiber Optics (www.techexpo.com/firms/schottfi) Titan Instruments (www.titanspecialties.com) Titan Tool Supply Co. (www.titantoolsupply.com) UXR (www.uxr.com) Visual Inspection Technologies Inc. (www.waterdrop.com/visual)

INTRODUCTION

Boroscopes (also spelled borescopes) are visual inspection tools providing high image quality. They were originally designed for inspecting gun barrels, but currently have many applications in modern technology. They are used to inspect remote or limited access locations, such as drill holes, vessels and chambers, chemical reactors, heat exchangers, process lines, and much more. Illuminated boroscopes and fiberscopes provide bright, sharp images for visual observations and are camera-adaptable for permanent record keeping. They enable critical internal inspections with speed, safety,

© 2003 by Béla Lipták

TABLE 7.1a
Sampling of Applications for Which Boroscopes Can Speed Testing, Inspection, and Quality Control

Aviation
- turbine and compressor blades
- combustion chambers, fuel nozzles
- landing gear
- airframes

Chemical and Petrochemical Processing
- piping
- tanks
- remote sight glasses

Power Generation
- boilers
- reciprocating engines
- heat exchangers
- turbines
- reactors

Manufacturing
- castings
- tubing and pipe
- hydraulic cylinders
- complex assemblies in process
- rubber hose

Pipeline and Drilling
- drill pipe
- transport piping

Mobile Equipment Maintenance
- engines
- transmissions
- drive mechanisms
- hydraulic components

Civil Engineering
- structural integrity
- equipment maintenance
- weld quality

Architecture and Design
- modeling
- structural integrity

Rubber and Plastics
- finished hose and tubing
- injection molding rams

Food and Pharmaceuticals
- piping
- tanks and vessels
- packaging lines

and certainty in the field or on the factory floor. Table 7.1a gives a partial list of applications that speed testing, inspection, and quality control.

ILLUMINATED RIGID FIBER BOROSCOPES

The rigid boroscope operates like a telescope in reverse. A telescope narrows the viewer's field of view, in order to look at a wide area in the distance. A boroscope spreads the field of view for observing a small area.

Figure 7.1b shows an illuminated rigid fiber-optic boroscope. Illumination comes from a high intensity light source, which can be explosion proof, through a fiber-optic bundle. The image is brought to the eyepiece by an objective lens. A boroscope also has relay lenses along its length to preserve precise resolution. Magnification is usually from 3 to 4 times. A single adjustment of the eyepiece focusing ring provides both objective focus and eyepiece correction. This ability for focus adjustment means that the boroscope will provide a much sharper image by expanding the depth of field.

Interchangeable viewing heads provide right angle, bottoming, circumference, forward oblique, or retrospective views. Rigid boroscopes are available in one piece or sectional models, for lengths up to 150 ft (45 m), and in diameters from 0.118 to 2.75 in. (3 to 75 mm). They permit camera and video adaptations. Rigid scopes are good choices for high resolution and rapid examination.

FLEXIBLE ILLUMINATED FIBERSCOPES

The flexible illuminated boroscope or fiberscope (Figure 7.1c) allows for inspection of the most difficult-to-reach spots. The semirigid gooseneck sheathing can be bent through multiple angles to clear almost any obstruction. There are two separate bundles inside the scope. The image bundle contains thousands of fibers precisely arranged at each end so that each fiber is in the same position at both ends of the bends.

The illuminating halo bundle, or the light guide bundle, carries light from an external light source to illuminate the viewing area. The fibers in these bundles are drawn from high-quality optical glass and are coated or clad with another glass which has a lower refractive index. The outer layer prevents light that enters the tube from escaping or passing through the sides to another fiber. The fibers are drawn small enough to be flexible and very rugged. These flexible fiberscopes can withstand repeated bending and flexing.

A fixed-focus objective lens is used to image the object onto the end of the bundle. The image is transmitted through the image bundle to the other end of the fiberscope, where an adjustable eyepiece magnifies the image for viewing. The unit can be used for straight-through viewing or 90° viewing by attaching the right angle tip to the objective lens.

The eyepiece can be adjusted for the individual operator's eye requirements. Like the rigid boroscope, it can be used with camera, video recorder, and TV monitor. Working lengths of up to 96 in. (2.4 m) are available.

© 2003 by Béla Lipták

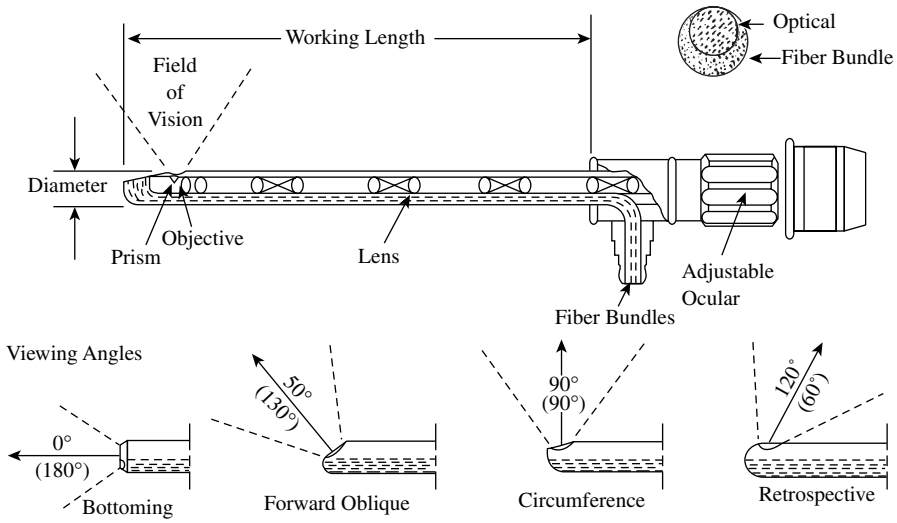

FIG. 7.1b
The design features of a rigid fiber boroscope.

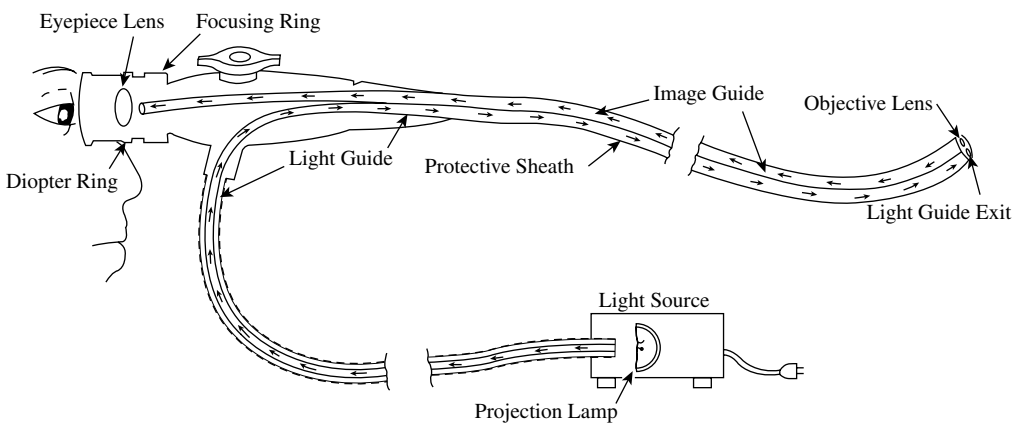

FIG. 7.1c
Design features of a flexible illuminated fiberscope.

SPECIAL-PURPOSE SYSTEMS

Chamberscopes offer greater magnification than conventional rigid boroscopes. They include high-intensity lighting and variable direction of view, and also allow examination of areas in large cavities at a distance up to 36 in. (0.9 m), particularly within vessels and engines.

Periscopes allow examination of hazardous processes or dangerous areas. They are designed for extreme radiation, high pressure or temperature, or underwater applications.

Vacuum and high-pressure boroscopes allow observations and recordings of images inside vacuum chambers and inside vessels under high pressures and temperatures. They allow documentation with photographic or video cameras.

Bibliography

Bergner, J., "Taking a Close Look at Visual Inspection Tools for Maintenance," *Engineer's Digest*, February 1988.

"Give and Take," *Aviation Equipment Maintenance*, October 1987.

© 2003 by Béla Lipták

7.2 Electrical and Intrinsic Safety

W. F. HICKES (1969) **C. M. J. OUDAR** (1985) **B. G. LIPTÁK** (1995) **A. ROHR** (2003)

Types of Devices:

A. Intrinsic safety barriers
B. Instrument housings and enclosures
C. Terminals with surge protection or suited for hostile industrial environments
D. Protectors against transients

Partial List of Suppliers:

ABB Products (A) (www.abb.com)
Allen-Bradley Co. (C) (www.ab.com.)
Altech Corp. (B, C) (www.altechcorp.com)
AMCO Engineering Co. (B) (www.amcoengineering.com)
Ametek Inc. Panalarm Div. (A) (www.ametek.com)
Bailey Controls Co. (A) (www.pmcx.com/bailey_network.htm)
Bebco Industries, EPS Div. (B—purged) (www.okbebco.com)
Capital Controls Co. (B) (www.capitalcontrols.com)
Comark Corp. (C—NEMA 4) (www.comarkcorp.com)
Contech Engineering Inc. (B) (www.contecusa.com)
Contrec Inc. (A) (www.contrec.co.uk)
Controlled Power Inc. (D) (controlledpowerinc.com)
Eaton Corp., Cuttler-Hammer Products (C) (www.ch.cutler-hammer.com)
EFI Electronics Corp. (D) (www.efinet.com/home.html)
Fibox Enclosures (B) (www.fiboxusa.com)
Fisher Controls International Inc. (A) (www.emersonprocess.com)
Hammond Enclosures (B) (www.hammfg.com)
Hardy Instruments Inc. (B) (www.hardyinstruments.com)
HiTech Technologies Inc. (B) (www.hitechtech.com)
Hoffman Engineering Co. (B) (www.hisoregon.com)
Honeywell Industrial Controls (A) (www.acs.honeywell.com)
Instrument Enclosures (B) (www.id-reps.com)
Invensys (A, B) (www.foxboro.com), (www.invensys.com)
Leeds & Northrup (A, B) (www.procinst.com)
Moore Industries (D) (www.miinet.com)
MTL Inc. (A, B, D) (www.mtlnh.com)
Norstat Inc. (D) (www.norstat.com)
Optima Enclosures (B) (www.optimaeps.com)
Pepperl + Fuchs Inc. (A) (www.pepperl-fuchs.com)
Phoenix Contact (C, D) (www.phoenixcontact.com)
Pro-Tech (B) (www.protech1.com)
Rochester Instrument Systems (B) (www.rochester.com)
Ronan Engineering Co. (A) (www.ronan.com)
Schroff Inc. (B) (www.pentair-ep.com)
R. Stahl Inc. (A) (www.rstahl.com)
Superior Electric (D) (www.superiorelectric.com)
Weidmüller Inc. (C) (www.weidmueller.de)
Wieland Inc. (C) (www.wielandinc.com)
Y-E-P Industries Inc. (B) (www.yepind.com)
Yokogawa Corp. (D) (www.yca.com)

© 2003 by Béla Lipták

Electrical and intrinsic safety-related worldwide standardization is still in the evolutionary process. The general concepts of electrical safety are internationally accepted, but their implementation is still being modified, and the corresponding standards are taking effect at different times in the various countries. It is advisable to check the prevailing regulations in the particular country at the particular time where and when a particular plant is being built.

INTRODUCTION

There are three ways in which electricity can kill or injure. Two are indirect—the result of fire and the result of explosion. One is direct—electrocution by electric shock.

As an academic matter, a fire and an explosion are basically the same, explosion being simply a very fast-spreading form of fire. They are considered separately for two reasons; one, because the results are so different, and two, perhaps more important, because the precautionary and preventive measures are quite different.

The danger of fire from electrical causes is generally confined to the supply side of instrumentation—from the point where power enters the system up to and including the power transformer found in most process control instrumentation. Transformer secondary circuits within the instrumentation can present a potential fire hazard, but they can be controlled with proper instrument construction. Instrument field wiring, employing the popular signal of 4 to 20 mA DC and lower, operates at energy levels at which fire hazard is remote. The precautions required for personnel protection and reliability automatically result in fire safety.

Power supply to the point of entry into an instrument is subject to detailed rules and regulations. In most of the United States, the National Electrical Code (NEC) has been adopted and has the effect of law. Many states and municipalities have their own codes, which differ slightly from the NEC. These are often obsolete editions of the NEC. It is always wise to check local rules and interpretations when planning an installation.

Safety depends primarily on three fundamental factors:

1. Enclosure of live parts, both to avoid personnel contact and accidental short circuiting
2. Fuses or circuit breakers to open in case of overload
3. Grounding of all exposed metal

ENCLOSURES

For ordinary locations, an enclosure need only be tight enough to prevent entrance of the human finger far enough to contact live parts. Unless ventilation is required for cooling, it should also be tight enough to prevent entrance of foreign material and to prevent escape of sparks or hot material in case of internal short circuit or fire. It is particularly important to prevent the escape of flaming drops from any burning insulation or plastics. The enclosure itself must not support combustion. This does not rule out plastics but does require selectivity in their use.

Because instruments differ in use, the usual rules for electrical enclosures need modification when applied. For ordinary electrical equipment, it is assumed that only a qualified electrician has access to the interior, and, therefore, only unusual interior hazards need be guarded. However, instruments frequently have doors for access by other than qualified technicians for purposes such as recorder chart changing, inking of pens, and controller adjustments. No live parts operating at voltage levels dangerous to personnel should be accessible during operational maintenance.

NEMA Terminology

For special environmental conditions, further requirements are imposed that usually follow the terminology established by the National Electrical Manufactures Association (NEMA) for motor starters and similar equipment. The following is excerpted from NEMA ICS "Industrial Control":

Type 1 General Purpose A general-purpose enclosure is intended primarily to prevent accidental contact with the enclosed apparatus. It is suitable for general-purpose applications indoors where it is not exposed to unusual service conditions. A Type 1 enclosure serves as a protection against dust, light, and indirect splashing, but is not dust-tight.

Type 2 Drip-Tight A drip-tight enclosure is intended to prevent accidental contact with the enclosed apparatus and, in addition, is so constructed as to exclude falling moisture or dirt. A Type 2 enclosure is suitable for application where condensation may be severe, such as is encountered in cooling rooms and laundries.

Type 3 Weather-Resistant (Weatherproof) A weather-resistant enclosure is intended to provide suitable protection against specified weather hazards. It is suitable for use outdoors.

Type 4 Watertight A watertight enclosure is designed to meet the hose test described in the following note. A Type 4 enclosure is suitable for application outdoors on ship docks and in dairies, breweries, etc.

Note: Enclosures shall be tested by subjection to a stream of water. A hose with a one-inch (25 mm) nozzle shall be used and shall deliver at least 65 gallons per minute (246 1/min). The water shall be directed on the enclosure from a distance of not less than 10 feet (3 m) and for a period of 5 min. During this period it may be directed in any one or more directions as desired. There shall be no leakage of water into the enclosure under these conditions.

© 2003 by Béla Lipták

Type 5 Dust-Tight A dust-tight enclosure is provided with gaskets or their equivalent to exclude dust. A Type 5 enclosure is suitable for application in steel mills, cement mills, and other locations where it is desirable to exclude dust.

Type 6 Submersible A Type 6 enclosure is suitable for application where the equipment may be subject to submersion, as in quarries, mines, and manholes. The design of the enclosure will depend upon the specified conditions of pressure and time.

Type 7 (A, B, C, or D) Hazardous Locations Class I These enclosures are designed to meet the application requirements of the National Electrical Code for Class I hazardous locations that may be in effect from time to time.

Type 8 (A, B, C, or D) Hazardous Locations Class I Oil Immersed These enclosures are designed to meet the application requirements of the National Electrical Code for Class I hazardous locations that may be in effect from time to time. The apparatus is immersed in oil.

Type 9 (E, F, or G) Hazardous Locations Class II These enclosures are designed to meet the application requirements of the National Electrical Code for Class II hazardous locations that may be in effect from time to time.

Type 10 Bureau of Mines Explosion-Proof A Type 10 enclosure is designed to meet the explosion-proof requirements of the U.S. Bureau of Mines that may be in effect from time to time. It is suitable for use in gassy coal mines.

Type 11 Acid- and Fume-Resistant Oil Immersed This enclosure provides for the immersion of the apparatus in oil such that it is suitable for application where the equipment is subject to acid or other corrosive fumes.

Type 12 Industrial Use A Type 12 enclosure is designed for use in those industries where it is desired to exclude such materials as dust, lint, fibers and flyings, oil seepage, or coolant seepage.

Type 13 Oil-Tight and Dust-Tight Indoor A Type 13 enclosure is intended for use indoors to protect against lint, dust, seepage, external condensation, and spraying of water, oil, or coolant.

IP Terminology

This terminology is used mostly in Europe. According to International Electrotechnical Commission's (IEC) IEC 60529 (2001–02), an enclosure can be defined as a combination of two numerals. The first numeral describes the protection provided against solid foreign objects, while the second refers to the type of protection provided against the penetration of water.

First Numerals:

0. Non-protected
1. Protected against solid objects greater than 50 mm
2. Protected against solid objects greater than 12.5 mm
3. Protected against solid objects greater than 2.5 mm
4. Protected against solid objects greater than 1.0 mm
5. Dust-protected
6. Dust-tight

Second Numerals:

0. Non-protected
1. Protected against dripping water
2. Protected against dripping water when tilted up to 15°
3. Protected against spraying water
4. Protected against splashing water
5. Protected against water jets
6. Protected against heavy seas
7. Protected against the effects of immersion
8. Protected against the effects of continuous submersion

In addition, two optional letters can also be used. The first letter describes the degree of protection against access of hazardous parts. The second letter indicates the degree to which protection is provided against special operating conditions. Neither of these letters is used in the instrumentation and control fields.

Typical IEC enclosure specification for indoor instrument cabinets in a control room ranges from IP20 to IP42. For field mounted transmitters the housing is usually specified as IP65.

FUSES AND CIRCUIT BREAKERS

The conventional 15 or 20 A fuse or breaker in the supply wiring to an instrument is designed to protect the wiring, not the instrument. Component failures or circuit faults within the instrument may result in total destruction of the instrument. To minimize damage and possible fire, a much smaller fuse, usually 1/4 to 3 A, is used in the instrument.

Grounding

A low-resistance, noncurrent-carrying metallic connection to ground should be established and maintained from every exposed metallic surface that can possibly become connected to an electrical circuit. Electrical connection could occur because of a fault, such as a loose wire making electrical contact, or as a result of leakage current through insulation.

Grounding is usually accomplished by bonding all elements together in a system terminated at the ground connection where power enters the premises. It may be a bare or green insulated wire. More often it is the conduit enclosing the wires. It must be securely joined, electrically and mechanically, to each piece of equipment. It is connected at the service entrance to the grounded circuit conductor (white wire) and to ground. Instead of connection to a ground at the

© 2003 by Béla Lipták

entrance connection, other suitable earth ground connections are acceptable. Equipment mounted directly on the structural steel of a building is considered effectively grounded. Water pipes are not effective grounds, particularly since the increasing use of plastic pipe for water connection.

Grounding serves two distinct purposes, both relating to safety. First, since the ordinary power circuit has one side grounded, a fault that results in electrical contact to the grounded enclosure will pass enough current to blow a fuse. Second, possibility of shock hazard is minimized since the low-resistance path of a properly bonded and grounded system will maintain all exposed surfaces at substantially ground potential.

Grounding is effective against hazard from leakage currents. All electrical insulation is subject to some electrical leakage. This may rise to a significant level as insulation deteriorates with age, or as layers of conductive dust accumulate in the presence of high humidity. A proper grounding system with low electrical resistance will conduct leakage currents to ground without developing significant potential on exposed surfaces.

Grounding of exposed metal surfaces is distinct from the grounded conductor of the ordinary power wiring. The latter is a current-carrying ground that is capable of developing significant potential, particularly on long lines, and with surge or even short-circuit currents. Grounding systems are substantially noncurrent carrying, except for possible leakage currents. Potential can build up only during the time required for a fuse to blow as a result of a specific fault that results in direct contact between power and grounding systems. Grounding is customarily not required for signal circuits where either maximum voltage is 30 V, or maximum current under any circumstance cannot exceed 5 mA.

Personnel Safety

The electrical energy necessary to kill or injure a person varies widely with conditions of exposure, especially with contact conditions (i.e., wet or dry skin, contact area, and the path the current takes through the body). A few millivolts applied directly to the heart can cause fibrillation and death. Yet it is a common, though not approved, practice among electricians to ascertain, if a 120-V (or even a 240-V) circuit is energized by putting two fingers of the same hand in contact with the two conductors.

If the person is insulated from the ground, for instance, by standing on a dry wood floor, the current path is through the fingers and the hazard is nil. If the person is standing in water or has a firm grasp on a water pipe, the current path would be through the central nervous system, and it might well be fatal. Much depends also on the nature of the contact. An electrical shock causes muscles to contract, thus a fingertip contact can be broken, but if the live part is gripped, it might be impossible to let go.

In addition to guarding against possible lethal shocks, the surprise factor should not be overlooked. An unexpected, but harmless, shock may induce a sudden reaction and expose a worker to an entirely different hazard, such as falling off a ladder.

Energy Levels

This discussion of energy levels hazardous to humans is limited to those circumstances where the whole body is involved. For medical electronics, where electrodes may be implanted within the body, a much lower set of numbers apply. Consideration of such equipment is outside the scope of this volume.

The significant factor is current through the body. A current of less than 1 mA is imperceptible to a normal man. If it is above 3 mA, it becomes unpleasant. If it is above 10 mA, the victim is unable to let go, and above 30 mA, asphyxiation may result. Still higher levels lead to heart stoppage and death. These values are for sustained contact. Much higher levels can be tolerated for a fraction of a second.

To relate this information to circuit voltage requires knowledge of body resistance. Internal body resistance can be as low as 100 Ω, but the resistance of the whole body is primarily in the skin and in skin contact. Dry fingers grasping a wire or small terminal will have a resistance in the order of 100,000 Ω. Wetting the fingers would lower this. To lower total body resistance to 1000 Ω would require immersion of hand or foot in water and a solid grip on a large object. As a practical working figure, the National Electrical Safety Code requires guarding above 50 V. A measurement of 30 V is considered safe for general use, even in children's toys, though surely not for swimming pools.

The NEC permits circuits up to 150 V if they are incapable of delivering more than 5 mA without special requirements for wire insulation.

If all line voltage circuits are enclosed in properly fused and grounded enclosures, and signal circuits not meeting either the 30 V or the 5 mA criteria are guarded, personnel safety will be assured.

EXPLOSION HAZARDS

Areas in which combustible gas, vapor, or dust may be present in explosive proportions are called *hazardous locations*. Special precautions must be taken with electrical equipment in hazardous locations to eliminate a source of ignition that could touch off an explosion. The specific precautions vary with the nature of the combustible material and the probability of its presence. An atmosphere is considered to be explosive if the concentration of the explosive vapors is within its lower and upper explosive limits (LEL and UEL). Some properties of flammable and explosive vapors and gases and their flammability limits or LEL and UEL values are listed in Tables 7.2a and 7.2b. Note that the data provided by the two tables is *not* identical, because they report the results of different sets of tests.

© 2003 by Béla Lipták

TABLE 7.2a
Properties of Some Flammable Liquids and Gases

Material	Chemical Formula	Specific Gravity Air = 1	Ignition Temperature in Air (°F)	Ignition Temperature in Air (°C)	Flamability Limits in Air (% vol.) Lower	Flamability Limits in Air (% vol.) Upper
Methane	CH_4	.55	1193	645	5.3	15.0
Natural gas	Blend	.65	1163	628	4.5	14.5
Ethane	C_2H_6	1.04	993–1101	534–596	3.0	12.5
Propane	C_3H_8	1.56	957–1090	514–588	2.2	9.5
Butane	C_4H_{10}	2.01	912–1056	489–569	1.9	8.5
Toluene	C_7H_8	3.14	1026–1031	552–555	1.3	6.7
Gasoline	A blend	3–4.00	632	333	1.4	7.6
Acetone	C_3HO	2.00	1042	561	2.6	12.8
Benzene	C_6H_6	2.77	968	520	1.4	6.7
Carbon monoxide	CO	.97	1191–1216	644–658	12.5	74.0
Hydrogen	H_2	.07	1076–1094	580–590	4.0	75.0
Hydrogen sulfide	H_2S	1.18	655–714	346–379	4.3	45.0

TABLE 7.2b
Properties and LEL and UEL Values of Explosive Materials

Product	Formula	LEL vol%	UEL vol%	Boiling Point °C	Boiling Point °F	Ignition Temperature °C	Ignition Temperature °F
Hydrogen	H_2	4.00	75.00	–252.7	–482.9	560	1040
Ethylene	C_2H_4	2.70	36.00	–103.9	–155.02	425	797
Cyclopropane	C_3H_6	2.40	10.40	<0	<32	498	928.4
Hexane	$CH_3(CH_2)_4CH_3$	1.20	7.50	68.7	155.7	233	451.4
Benzine		0.70	5.90	30–210	86–410	280	536
Butane	C_4H_{10}	1.50	8.50	–0.6	31	372	701
Propane	$CH_3CH_2CH_3$	2.10	9.50	–42.2	–43.96	470	878
Ethylic alcohol	C_2H_5OH	3.50	15.00	78.4	173.1	423	793.4
Acetone	CH_3COCH_3	2.5	13.00	56.5	133.7	535	995
Natural gas		3.93–6.60	13.20–17.50	<0	<32	482	899.6
Methane	CH_4	4.40	17.00	–161.4	–258.5	537	998.6
Acetylene	C_2H_2	2.3	100	–85	–121	305	581
Ethylene oxide	CH_2OCH_2	3.00	100	13.5	56.3	435	815

Source: The Italian Electrotechnical Committee, CEI 31–35: Electrical Apparatus for Explosive Atmospheres—Guide for Classification of Hazardous Areas. With permission.

NEC Definition of Hazardous Locations

The first step in deciding what equipment to use is to determine the nature and the degree of hazard. The NEC[1] describes hazardous locations by class, group, and division. The *class* defines the physical form of the combustible material mixed with air:

Class I—Combustible material in the form of a gas or vapor
Class II—Combustible material in the form of a dust
Class III—Combustible material in the form of a fiber, such as textile flyings

The *groups* are subdivisions of the *classes*:

Group A—Atmospheres containing acetylene
Group B—Atmospheres containing hydrogen, gases or vapors of equivalent hazard, such as manufactured gas
Group C—Atmospheres containing ethyl ether vapors, ethylene, or cyclopropane
Group D—Atmospheres containing gasoline, hexane, naphtha, benzine, butane, propane, alcohol, acetone, benzol, lacquer, solvent vapors, or natural gas

© 2003 by Béla Lipták

Group E—Atmospheres containing metal dust, including aluminum, magnesium and their commercial alloys, and other metals of similarly hazardous characteristics

Group F—Atmospheres containing carbon black, or coal or coke dust

Group G—Atmospheres containing flour starch or grain dusts

The *division* defines the probability of an explosive mixture being present. Only the breakdown for Class I is given because it is the one most often encountered. Classes II and III are similarly subdivided.

Class I, Division 1—Locations (1) in which hazardous concentrations of flammable gases or vapors exist continuously, intermittently, or periodically under normal operating conditions, (2) in which ignitable concentrations of such gases or vapors may exist frequently because of repair or maintenance operations or because of leakage, or (3) in which breakdown or faulty operation of equipment, or processes which might release ignitable concentrations of flammable gases or vapors, might also cause simultaneous failure of electrical equipment.

Class I, Division 2—Locations (1) in which volatile flammable liquids or flammable gases are handled, processed, or used, but in which the hazardous liquids, vapors, or gases will normally be confined within closed containers or closed system which they can escape only in case of accidental rupture or breakdown of such containers or systems, or in case of abnormal operation of equipment, (2) in which ignitable concentrations of gases or vapors are normally prevented by positive mechanical ventilation, but which might become hazardous through failure or abnormal operation of the ventilating equipment, or (3) that are adjacent to Class I, Division 1 locations, and to which ignitable concentrations of gases or vapors might occasionally be communicated unless such communication is prevented by adequate positive-pressure ventilation from a source of clean air, and effective safeguards against ventilation failure are provided.

As a rule of thumb, any atmosphere tolerable for a person to breathe is not within the explosive range. Except for methane and hydrogen, gases and vapors become toxic or irritating well below their lower explosive limit. An explosive mixture of dust limits visibility to a few feet.

Economic reasons (i.e., cost of lost product) tend to limit Division 1 locations to an area within a few feet of probable leaks such as pump glands and valve stem packing. The American Petroleum Institute has developed a series of detailed criteria for classifying areas at such distances in typical situations.[2]

IEC Definition of Hazardous Locations

Hazardous area definitions by the IEC can be found in IEC 60079–10 (2002–06). The IEC approach is to define the nature of the source, which releases the explosive substance. This can be continuous, primary or secondary, which correspond to a zone definition of zone 0, 1, or 2.

The extension and the shape of the zone is affected by the release rate (the higher the release, the greater the zone), the lower explosive limit (LEL; the lower the LEL, the greater the zone), the ventilation, and the specific gravity of gas/vapor when released. A gas/vapor heavier than 1.2 SG_{air} originates a hazardous zone with the shape lying on the ground, while if lighter than 0.8 SG_{air} it originates a hazardous zone of vertical shape. For specific gravities between 0.8 and 1.2, the hazardous zone encompasses the zones for lighter and heavier gas/vapors.

In Europe, the majority of the countries derived their national regulations from the IEC or have adopted the IEC regulations and although their timing varies, the regulations are consistently applied. In Canada, the IEC standards are compulsory. In the United States, the IEC standards have been accepted on an optional basis.

Explosions

An explosion is dependent upon the simultaneous presence of three conditions (Figure 7.2c). An oxidizer in the form of the oxygen in air is ordinarily present. Fuel, a gas, vapor, or finely divided solid is normally kept confined for economic reasons, if not for safety. However, by definition, a hazardous location is a place where fuel and oxidizer are present in combustible proportions, at least at times. Ignition of this dangerous combination must not be permitted. Electrical equipment must be built and operated in a manner to prevent its becoming a source of ignition. It could ignite this hazardous atmosphere in either of two ways: by surface temperatures in excess of the ignition temperature or by sparks. Some sparks are incidental to normal operation, as in the operation of switches, while some are accidental, as in faulty connections. Both must be guarded against.

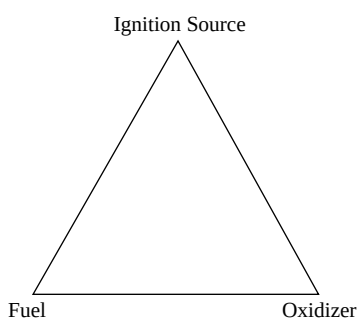

FIG. 7.2c
Prerequisites for an explosion.

© 2003 by Béla Lipták

PROTECTION METHODS

There are several approaches to safety:

1. Confine explosions so they do no damage (explosion proof)
2. Keep atmosphere away from ignition source (pressurization or ventilation, oil immersion, sealing, or potting)
3. Limit energy to levels incapable of ignitions (intrinsic safety)
4. Miscellaneous (sand filling, increased safety, dust ignitions-proof, nonincendive)

Explosion-Proof ("Flameproof" in Britain)—All equipment is contained within enclosures strong enough to withstand internal explosions without damage, and tight enough to confine the resulting hot gases so that they will not ignite the external atmosphere. This is the traditional method and is applicable to all sizes and types of equipment.

Purging, Pressurization, Ventilation—This depends upon the maintenance of a slight positive pressure of air or inert gas within an enclosure so that the hazardous atmosphere cannot enter. Relatively recent in general application, it is applicable to any size or type of equipment.

Oil Immersion—Equipment is submerged in oil to a depth sufficient to quench any sparks that may be produced. This technique is commonly used for switch-gears but it is not utilized in connection with instruments.

Sealing—The atmosphere is excluded from potential sources of ignition by sealing them in airtight containers. This method is used for components such as relays, not for complete instruments.

Potting—Potting compound completely surrounding all live parts and thereby excluding the hazardous atmosphere has been proposed as a method of protection. There is no known usage except in combination with other means.

Intrinsic Safety—Available energy is limited under all conditions to levels too low to ignite the hazardous atmosphere. This method is useful only for low-power equipment such as instrumentation, communication, and remote control circuits.

Sand Filling—All potential sources of ignition are buried in a granular solid, such as sand. The sand acts, in part, to keep the hazardous atmosphere away from the sources of ignition and, in part, as an arc quencher and flame arrester. It is used in Europe for heavy equipment. It is not used in instruments.

Increased Safety—Equipment is so built that the chance of spark or of dangerous overheating is nil. In practice, this means rugged construction, wide spacings between parts of opposite polarity, extra insulation, nonsparking fans and good mechanical protection. Widely used in Europe for heavy equipment such as large motors. It is also recognized for instruments particularly in Germany. It is not recognized in the United States.

Dust Ignition-Proof—Enclosed in a manner to exclude ignitable amounts of dust or amounts that might affect performance. Enclosed so that arcs, sparks, or heat otherwise generated or liberated inside of the enclosure will not cause ignition of exterior accumulations or atmospheric suspensions of dust.

Nonincendive—Equipment which in normal operations does not constitute a source of ignition (i.e., surface temperature shall not exceed ignition temperature of the specified gas to which it may be exposed, and there are no sliding or make-and-break contacts operating at energy levels capable of causing ignition. Used for all types of equipment in Division 2 locations. Relies on the improbability of an ignition-capable fault condition occurring simultaneously with an escape of hazardous gas.

A summary of the various protection methods is given in Table 7.2d.

Advantages and Disadvantages of Protection Methods

Table 7.2e attempts to rate the various protection methods used for instrumentation. Methods are rated from A to C.

Safety All methods are safe if the equipment is properly installed, maintained, and protected by a correctly selected method that is consistent with the area classification. Intrinsic safety is rated A because recognized standards are most conservative and it is less dependent on day-to-day usage. Ordinary carelessness does not make intrinsically safe equipment unsafe. Explosion-proof equipment is worthless if the cover is left off, and purging is dubious under the same circumstances. Purging is also dependent on reliability of purge air supply.

Cost of the Instrument Purging is usually lowest in cost because it requires no special construction for hazardous location use, except for an air inlet. Since an intrinsically safe instrument does not require the special housing of an explosion-proof instrument, there is a possible saving. The cost difference between an explosion-proof housing and a rugged weatherproof housing is too small to justify two separate designs for small devices, such as field-mounted transmitters. Cost of review and listing by a testing agency, such as Underwriters Laboratories or Factory Mutual, add to the cost of intrinsic safety.

Cost of Installation

Intrinsic safety is at least potentially lowest in cost. The NEC permits wiring for approved intrinsically safe equipment in

© 2003 by Béla Lipták

TABLE 7.2d
Reference for Protection Methods

	Class I Gas/Vapor Group A, B, C, D		*Class II Dust Group E, F, G*		*Class III Flyings and Fibers*	
Protection Method	*Div. 1*	*Div. 2*	*Div. 1*	*Div. 2*	*Div. 1*	*Div. 2*
Explosion-proof housings	OK	Required only for sparking or hot devices	Not applicable unless also dust ignition-proof		OK if tightly enclosed and no overheating when covered with flyings	
Dust ignition-proof	Not applicable		Dust-proof and no overheating when dust covered		Not applicable	
Intrinsic safety	OK	OK	OK	OK	OK	OK
Purging	OK	OK	Subject of work by NFPA		?	?
Potting	?		OK if no overheating			
Hermetic sealing	?		OK if no overheating			
Oil immersion	Acceptable but not convenient to use for instruments				?	?
Nonincendive	Not applicable	OK	Not applicable unless dust ignition-proof	OK	OK if tightly enclosed and no overheating when covered with flyings	

TABLE 7.2e
Rating the Protection Methods

	Safety	*Cost of Instrument*	*Cost of Installation*	*Maintenance*	*Flexibility*
Intrinsic safety	A	C	A	A	C
Explosion-proof	B	B	B	B	B
Purging	C	A	C	C	A

hazardous locations to be the same as in ordinary locations, such as multiwire cables without special protection. For explosion-proof or purged equipment, all wiring must be in rigid conduit, all fittings must be explosion-proof, and conduits must be sealed. Purged equipment also requires an air supply system with purge failure alarms and in some cases automatic shutdown.

Maintenance Intrinsic safety is rated A because the equipment is accessible for routine calibration checks and adjustments. Explosion-proof equipment must be deenergized before being opened or maintenance must be deferred until the area is known to be safe. Purging is similarly limited and alarms and interlocks must also be maintained.

Flexibility Purging is rated A because essentially any standard or special instrument with reasonably tight housing can be readily adapted to purging. Explosion-proofing is limited to instruments available in that construction or that can be fitted into a standard, explosion-proof box. The need for external adjustments and indication can make this very expensive. Intrinsic safety must be evaluated as a system. In the past a serious problem has been the inability to interconnect apparatus of different manufacturers. Now this problem is overcome through the use of properly selected safety barriers and compliance with the constraints mentioned in the certifications issued by the official bodies.

The marking scheme described in paragraph A-4–2 of the National Fire Protection Association's (NFPA) NFPA Standard 493 provides a convenient way to assess the compatibility of apparatus of different manufacturers with respect to intrinsic safety. This concept facilitates the connection between two-terminal devices such as a two-wire transmitter and barrier.[3]

Purging, Pressurization, or Ventilation

Any reasonably tight enclosure housing electrical equipment can be made safe by providing a continuous flow of air or inert gas. The enclosure can be of any size from a small instrument case or fractional horsepower motor to an entire building, such as control houses.

The essentials are:

1. A source of clean air
2. Sufficient initial flow to sweep out gas that may have been present
3. Sufficient pressure building in the enclosure to prevent entrance of combustible atmosphere
4. Suitable alarms and interlocks

A typical purge assembly is illustrated in Figure 7.2f.

Air Supply For a single instrument or other small device, the instrument air system is the best source of air for pressurization since it is clean and dry. Where a large number of

© 2003 by Béla Lipták

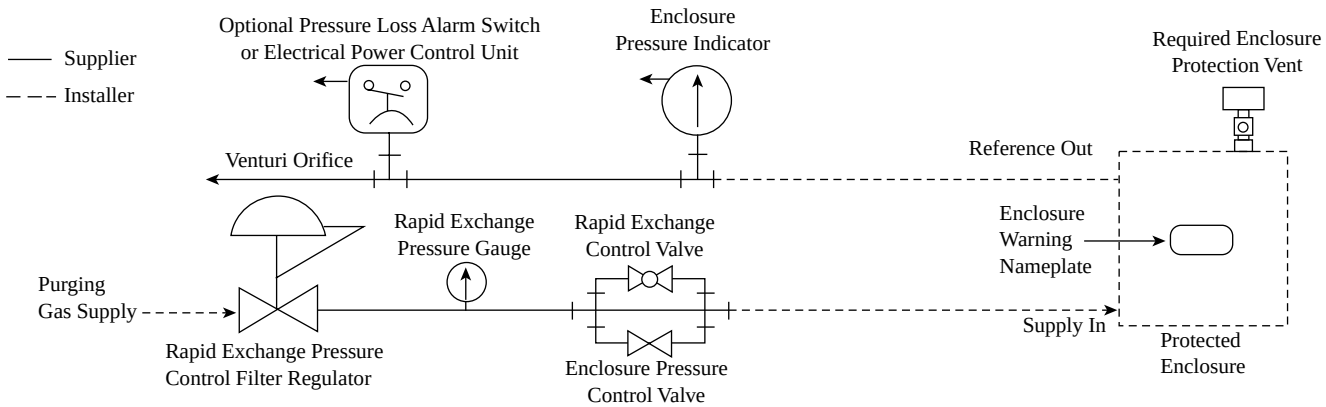

FIG. 7.2f

Packaged purge systems are marketed for Class 1 area and are provided with rapid exchange purging capability. (Courtesy of Bebco Industries.)

units are involved or an entire control house, the large volumes required make this impractical. The best solution varies with individual plant conditions.

Finding a safe place for an air intake requires careful study. An intake 25 ft (7.5 m) off the ground and not within a 45° shadow cone of any potential source of vapor is generally considered adequate for a refinery handling vapors heavier than air. For gases nearly as dense or lighter than air, there is no definitive answer except distance and an upwind location. In any event, the suction line must be of substantial construction and free of leaks where it passes through a potentially hazardous area.

Initial Purging Pressurized apparatus, when put in service after having been open, may contain combustible mixture. Before power may be turned on, sufficient air must pass through it to sweep out the combustible gas or at least reduce it to a harmless concentration. This is usually achieved by requiring a time interval to elapse after closing up the apparatus and starting purge flow before circuits are energized. A flow of four times the internal volume of the case is adequate for the usual instrument housing. Large or compartmentalized enclosures require special consideration.

If natural leakage does not provide the necessary purge volume in a reasonable length of time, auxiliary vents may be provided to accelerate the operation.

Pressure During operation the enclosure must be maintained under a pressure of at least 0.1 in. of water column (25 Pa) to prevent influx of combustible mixture. This figure is equivalent to the wind pressure at 15 mi/h (24 km/h). While higher wind velocities might force outside air into the housing, the potential hazard is considered negligible since at these velocities any combustible vapors would be very rapidly dispersed.

Alarms and Interlocks While some warning of pressurization failure is needed, the specific requirement depends on the nature of the enclosure's content and the degree of hazard outside.

Classification of Purging Systems The Instrumentation, Systems, and Automation Society (ISA)[4] and the NFPA[5] classify purging as follows:

> Type X purging reduces the classification within an enclosure from Division 1 to non-hazardous. Type X purging would permit an arcing switch in a general purpose housing located in a truly hazardous, Division 1 location. Since failure of the purge air supply would soon lead to disaster, immediate automatic shutdown by pressure switch or flow detector is required.
>
> Type Y purging reduces the classification within an enclosure from Division 1 to Division 2. Type Y purged equipment within an enclosure does not normally constitute a source of ignition, hence purge failure present no immediate hazard. Only a visible or audible indication is required.
>
> Type Z purging reduces the classification within an enclosure from Division 2 to non-hazardous. Type Z purged equipment, used in Division 2, where the atmosphere is not normally hazardous, again presets no immediate hazard and visible or audible indication is sufficient.
>
> Temperature of all parts exposed to the atmosphere, in hazardous locations, must not exceed 80% of the ignition temperature of the combustible material.

Explosion-Proof Components

Article 100 of the National Electrical Code defines explosion-proof apparatus as:

> Apparatus enclosed in case which is capable of withstanding an explosion of a specified gas or vapor which may occur within and of preventing the ignition of a specified gas or vapor surrounding the enclosure by sparks, flashes, or explosion of the gas or vapor within, and which operates

© 2003 by Béla Lipták

at such an external temperature that a surrounding flammable atmosphere will not be ignited thereby.

Explosion-proof apparatus is not intended to be gas tight. It is assumed that no enclosure that may have to be opened from time to time for inspection or maintenance can practically be maintained gas tight. Hence, if the surrounding atmosphere is hazardous, the atmosphere within will also become hazardous, and an internal explosion may result. If the box holds together and the only openings are long, narrow, and preferably crooked paths, the escaping gases will not be hot enough to ignite the external atmosphere. The British term, *flameproof*, is perhaps more descriptive of the function that the American term, *explosion-proof*.

There are two broad approaches to construction: a relatively tight box with broad flanges and tightly fitted, threaded (5 thread minimum) or rabbet joints, or a relatively loose box with many small passages designed to minimize pressure buildup. The first requires a very strong box to withstand full explosion pressure, up to 175 PSIG (1208 kPa) for Group C or D, and 1000 PSIG (6900 kPa) or greater for Group B or A. This is usually cast iron or cast aluminum. Plastic is used in Europe for smaller boxes.

For the second approach, the pressure rise can be kept down, to 20 PSIG (138 kPa) or less, allowing lightweight construction. Though officially recognized, the latter approach has been little used because of the possibility of vent passages becoming plugged by dirt or by injudicious use of a paint brush.

INTRINSIC SAFETY

The NEC defines intrinsic safety as follows:

> Intrinsically safe equipment and wiring shall not be capable of releasing sufficient electrical or thermal energy under normal or abnormal conditions to cause ignition of a specific flammable or combustible atmospheric mixture in its most easily ignitable concentration.
>
> Abnormal conditions shall include accidental damage to any field-installed wiring, failure of electrical components, application of over-voltage and maintenance operations, and other similar conditions.

A quantity of a combustible mixture must be heated to its ignition temperature for an explosion to occur. A weak spark heats so little mixture that heat loss exceeds heat supply and the incipient explosion dies out. A large spark heats enough mixture for combustion to become self-sustaining and an explosion propagates. If energy is kept at a low level, ignition will not occur. This is the basis of intrinsic safety. It is not sufficient that energy be low in normal operation. It must also be low under any conceivable abnormal operation or fault condition.

Energy Levels

Safe energy levels cannot be defined in any simple form. Ignition depends on specific gas, gas concentration, voltage, current, energy storage elements, contact material, contact size, and speed of opening or closing of contacts. Ignition of hydrogen (one of the most easily ignited gases) has been achieved under laboratory conditions (high voltage) with energy as low as 20 μJ. For common hydrocarbons and the voltages actually encountered in instrumentation, energies circa 0.2 to 0.3 mJ are required.

Curves such as Figure 7.2g show limiting circuit parameters that provide ignition energy for a particular gas. They can be used safely only after careful examination of the specific equipment by one skilled in the art and by application of an adequate safety factor. Actual ignition testing of the specific apparatus is the preferred practice.

System Approach

In evaluating equipment for intrinsic safety, it is always necessary to look at all elements of the complete loop. For example, an ordinary thermocouple (TC), by itself, is unquestionably safe. Add a simple millivolt indicator and it is still safe. Connect the couple to a recorder, powered from a 120 V line, and the question of safety arises. What could happen if the recorder allowed dangerous amounts of energy to reach the TC leads? The problem is easily solved by good recorder design and construction, but it cannot be overlooked.

Thus, there is no such thing as an intrinsically safe instrument unless it operates with a self-contained, low-energy power source, such as a small battery or solar cell that is isolated from all other power sources. Anything that is connected or wired to that instrument must be viewed as components of the system. This requires a careful study of all components of the complete loop and of the relevant constraints given by the official bodies. Someone must evaluate the combination *and assume responsibility for its safety*.

Certification of Intrinsic Safety

The practical answer for the instrument buyer and user is to look for certification by a qualified testing agency. In the United Sates there is the Underwriter Laboratories or Factory Mutual Research Corporation. It is the Canadian Standards Association in Canada, Physikalische-Technische Bundesanstalt in Germany, and the British Approvals Service for Electrical Equipment in Flammable Atmospheres (BASEEFA) in Britain. Many other countries have their own agencies—these are the most well known.

While each testing agency has its own detailed rules and traditions, NFPA 493–1978, "Intrinsically Safe Apparatus for Use in Division 1 Hazardous Locations," outlines a reasonably typical evaluation. As it says, however, "it is not an instruction manual for untrained persons but is intended to promote uniformity of practice among those skilled in the art." The following outline of the procedure will not make

© 2003 by Béla Lipták

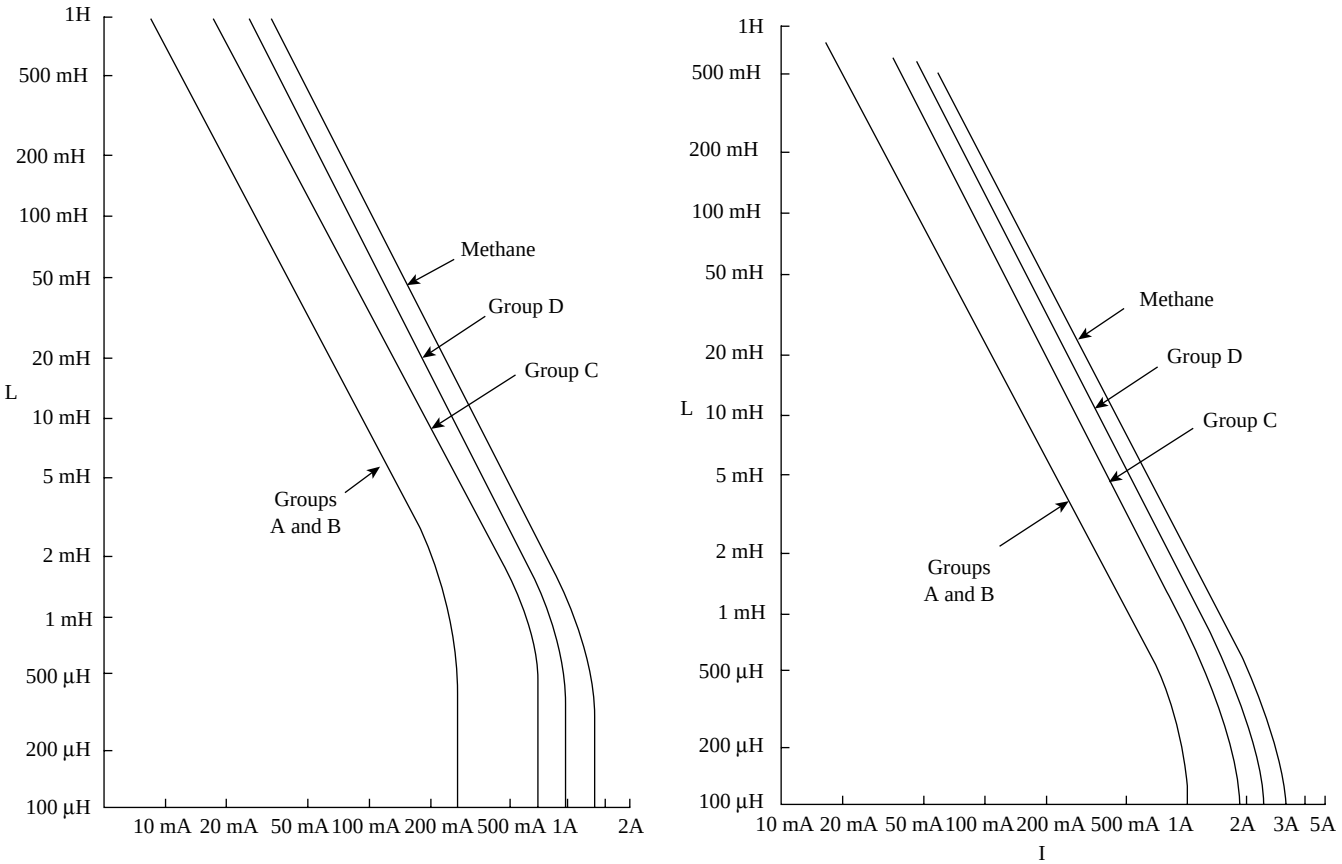

FIG. 7.2g

Left: Inductance circuits (L > 1 mH). Minimum igniting current at 24 V (1 = igniting current). Applicable to all circuits containing cadmium, zinc, or magnesium. Right: Inductance circuits (L > 1 mH). Minimum igniting current at 24 V. Applicable only to circuits where cadmium, zinc, or magnesium can be excluded. (Reprinted with permission from NFPA 493–1978. Standard for Intrinsically Safe Apparatus and Associated Apparatus for Use in Class I, II, and III, Division 1 Hazardous Locations, Copyright © 1979, National Fire Protection Association, Quincy, MA 02269. This reprinted material is not the complete and official position of the NFPA on the referenced subject, which is represented only by the standard in its entirety.)

the reader an expert but will indicate the conservative nature of the approach.

Three steps are involved:

1. Circuit analysis—to determine worst possible fault conditions
2. Evaluation—to ensure a margin of safety under the condition found above
3. Construction review—to ensure that critical components are reliable and that circuit will function as planned

Circuit Analysis *Circuit analysis* is a review of the circuit, component by component, considering the possible mode of failure of each and its effect on energy levels available in the hazardous area. It starts where line power enters the system and includes all parts of the interconnected instrument system wherever located—in the control house or in the field. The object is to pinpoint the fault condition or combination of conditions allowing highest energy in the field circuits.

Evaluation This is the next step in the procedure. The purpose is to ascertain whether or not each fault condition constitutes a possibility of ignition. With the use of the actual circuit, the faults are produced by short- or open-circuiting components with the field leads connected to a test apparatus. The test apparatus consists of pair of contacts operating in a chamber filled with the most readily ignited mixture of a suitable combustible gas with air. The contacts simulate a broken wire, a wire dragging on a surface, or the short-circuiting of a pair of leads.

An internationally accepted form of test apparatus is of West German origin. In July 1967, this test apparatus was tentatively accepted by the IEC meeting in Prague and was later adopted.

It is also possible to use measured voltages, currents, inductance, capacitance, etc., and compare them with the results of previous tests with similar circuit parameters. As illustrated in Figure 7.2g, suitable curves exist,[3,4] but they must be interpreted with care and a suitable margin of safety.

© 2003 by Béla Lipták

Construction Review This is the final step in the procedure. A circuit component must be of a reliable form of construction if it is to be depended upon for safety. A transformer that will withstand a high potential (1480 V applied primary to secondary) immediately after being deliberately burned out is considered reliable. This presupposes that the transformer is so constructed that consistent performance of this nature can be anticipated. A resistor must withstand gross overloading without significantly changing in value. Live parts, such as terminals, must be so separated that an accidental short circuit is essentially impossible. If an instrument system survives this kind of examination, its safety is assured.

International Regulations

The international approach distinguishes two categories of field mounted instruments:

1. Simple apparatus, such as thermocouples, resistance temperature detectors or contacts that do not require certification, but do need to be connected to other instruments (across barriers).
2. Intrinsically safe apparatus, such as transmitters, I/P converters and solenoid valves, which require installation certification for the specified hazardous area, category of gas, and temperature class. These apparatus must be connected to the associated instruments (across barriers).

The barriers, installed in a safe area, provide the separation between the intrinsically safe devices in the field and the nonintrinsically safe devices (distributed control systems, programmable logic controllers, recorders, indicators, etc.) in the control room. The barriers must also be certified and must be suitable for being connected to field mounted apparatus, which are installed in a particular hazardous area and exposed to a particular group of gases and temperature class. The nameplate and the certificate both must give the following data:

1. Maximum open circuit voltage
2. Maximum short circuit current
3. Maximum allowable external capacitance
4. Maximum allowable external inductance
5. Maximum transferred power

The safety barriers serve to send on the signals between the control room and the field. They must be suitable to handle the maximum voltage (Um) that is present in the control room. This voltage currently in the United States is 240 V. The above considerations are the basic philosophy, while all other mandatory details can be found in the IEC regulations.

Grounding In order to prevent the formation of sparks with energy contents that exceed the intrinsically safe limit or the developing of over-voltages, the selection of the safety barriers must also consider the grounding of the field instruments.

If the grounding is dedicated, equipotential, and the field mounted device is isolated from the ground with an electrical strength of at least 500 V, Zener diode type barriers can be used. If the grounding is not equipotential, galvanic insulation is required. If the circuitry in the field mounted instrument is grounded, the barriers must be provided with galvanic insulation.

Barriers The Zener barriers are inexpensive and reliable passive circuits that consist only of some resistors and Zener diodes. Unfortunately, they do require equipotential grounding, which can make the overall installation expensive. The intrinsically safe apparatus must be connected to the equipotential ground at a properly identified single point and via an isolated conductor having a resistance of not more than 1 ohm.

The intrinsically safe side of the galvanically isolated barriers includes an energy limiting circuit with Zener diodes and limiting resistors. It transfers the signals to and from the hazardous area via such isolating components as transformers, opto-couplers, and relays. The Zener diodes in the barriers are duplicated or tripled to maintain the protection toward the external circuit also in case of failure of one or two of them.

The certificate provided for the barriers must show the total inductance limit, the maximum allowable ratio of inductance/resistance for the wiring, and the capacitance of the circuit (field instrument plus wiring) in the classified area.

Cables and Their Installation In case of a short circuit or the breaking of a circuit, the wiring between the barrier and the field apparatus must not store dangerous quantities of energy, which might cause a spark. The screens must be grounded at only one point and in a safe area. The cables connecting to intrinsically safe apparatus must be identified in a consistent and easily recognizable manner. If the method of identification is by color, all intrinsically safe cables must be light blue and no other cable in the plant can have light blue color. Multicore cables can carry only intrinsically safe signals.

In connection with cable trays, one option is to lay the intrinsically safe cables in different cable trays than the ones carrying nonintrinsically safe cables. Another option is to provide physical separation between the two types within the same cable tray. A third option is to provide armoring, sheathing, or screening for one of the cable types (intrinsically safe or nonintrinsically safe) in the tray. Clearly marked and separate field junction boxes must also be provided for intrinsically safe and for nonintrinsically safe circuits.

Terminations Reliable separation must be provided between intrinsically safe and nonintrinsically safe circuits. This can be done by providing a separating panel or by keeping a minimum of 2 in. (50 mm) distance from other circuits. If this distance method of separation is used, it should be

© 2003 by Béla Lipták

checked to make sure that even if another wire is disconnected, it cannot contact the intrinsically safe terminals. In addition, all intrinsically safe terminals must be so identified.

References

1. National Fire Protection Association, NFPA 70–2002 (ANSI CI-1981), "National Electrical Code 2002 edition," Canadian Equivalent, CSA Standard C22.1–1982, "Canadian Electrical Code Part I," Quincy, MA/Rexdale, Ontario, 1981, 1982.
2. American Petroleum Institute 500, "Recommended Practice for Classification of Areas of Electrical Installations in Petroleum Refineries," 2nd ed., Washington, D.C., November 1997.
3. National Fire Protection Association, NFPA 493–1978, "Intrinsically Safe Apparatus and Associated Apparatus for Use in Class I, II and III, Division Hazardous Location," Quincy, MA, 1978.
4. Instrumentation, Systems, and Automation Society, ISA-RP12.4, "Pressurized Enclosures," Research Triangle Park, NC, 1996 (covers only small enclosures, such as instruments).
5. National Fire Protection Association, NFPA 496, "Standard for Purged and Pressurized Enclosures for Electrical Equipment," Quincy, MA, 1998 (similar to ISA RP12.4, but expanded to cover large switchgear and complete control houses).

Bibliography

"A User's Guide to Intrinsic Safety" (AN9003), *Measurement Technology Ltd*., Norfolk, U.K., March 1983.

American National Standards Institute/Instrumentation, Systems, and Automation Society, ANSI/ISA-RP12.6–1995, "Wiring Practices for Hazardous (Classified) Locations Instrumentation Part 1: Intrinsic safety," Washington, D.C./Research Triangle Park, NC, 1995.

American National Standards Institute/Instrumentation, Systems, and Automation Society, ANSI/ISA-12.12.01–2000, "Nonincendive Electrical Equipment for Use in Class I and II, Division 2 and Class III, Divisions 1 and 2 Hazardous (Classified) Locations," Washington, D.C./Research Triangle Park, NC, 2000.

American National Standards Institute/Instrumentation, Systems, and Automation Society, ANSI/ISA-12.16.01–1998 (IEC 79–7 Mod), "Electrical Apparatus for Use in Class 1, Zone 1 Hazardous (Classified) Locations Type of Protection: Increased Safety 'e'," Washington, D.C./Research Triangle Park, NC, 1998.

American National Standards Institute/ Instrumentation, Systems, and Automation Society, ANSI/ISA-12.22.01–1998 (IEC 79–1 Mod), "Electrical Apparatus for Use in Class 1, Zone 1 Hazardous (Classified) Locations Type of Protection: Flameproof 'd'," Washington, D.C./Research Triangle Park, NC, 1998.

American National Standards Institute/Instrumentation, Systems, and Automation Society, ANSI/ISA-12.23.01–1998 (IEC 79–18 Mod), "Electrical Apparatus for Use in Class 1, Zone 1 Hazardous (Classified) Locations Type of Protection: Encapsulation, 'm'," Washington, D.C./Research Triangle Park, NC, 1998.

American National Standards Institute/Instrumentation, Systems, and Automation Society, ANSI/ISA-TR12.24.01–1998 (IEC 79–10 Mod), "Recommended Practice for Classification of Locations for Electrical Installations Classified as Class 1, Zone 0, Zone 1 or Zone 2," Washington, D.C./Research Triangle Park, NC, 1998.

American National Standards Institute/Instrumentation, Systems, and Automation Society, ANSI/ISA-12.25.01–1998 (IEC 79–5 Mod), "Electrical Apparatus for Use in Class 1, Zone 1 Hazardous (Classified) Locations Type of Protection: Powder Filling 'q'," Washington, D.C./Research Triangle Park, NC, 1998.

American National Standards Institute/Instrumentation, Systems, and Automation Society, ANSI/ISA-12.26.01–1998 (IEC 79–6 Mod), "Electrical Apparatus for Use in Class 1, Zone 1 Hazardous (Classified) Locations Type of Protection: Oil-Immersion 'o'," Washington, D.C./Research Triangle Park, NC, 1998.

American National Standards Institute/National Fire Protection Association, ANSI/NFPA 70, Quincy, MA, 1981.

American Petroleum Institute, API RP 500, "Recommended Practice for Classification of Locations for Electrical Installations at Petroleum Facilities Classified as Class I Division 1 and Division 2," Washington, D.C., 1998.

American Petroleum Institute, API RP 505, "Recommended Practice for Classification of Locations for Electrical Installations at Petroleum Facilities Classified as Class I, Zone 0, Zone 1 and Zone 2," Washington, D.C., 1998.

Babiarz, P.S., "Intrinsic Safety Circuit Design: Part 1," *InTech*, October 1992.

Babiarz, P.S., "Intrinsic Safety Circuit Design: Part 2," *InTech*, December 1992.

Babiarz, P.S., "Use the 80/20 Rule in Intrinsic Safety Circuit Design: Part 3," *InTech*, March 1993.

Babiarz, P.S., "Making Digital Inputs Intrinsically Safe: Part 4," *InTech*, April 1993.

Babiarz, P.S., "Intrinsically Safe Outputs Made Easy: Part 5," *InTech*, September 1993.

Babiarz, P.S., "Installing Intrinsically Safe Systems: Part 6," *InTech*, October 1993.

Babiarz, P.S., "Zoning in on Intrinsic Safety," *InTech*, April 2000.

Berto, F.J., "Intrinsically Safe Pressure Measurement Instrumentation Loops," *InTech*, February 1991.

Bothe, H. and Johannsmeyer, U., "Explosion Protection for Optical Radiation in Hazardous Areas," *InTech*, August 2001.

Calder, W., "Electronic Instruments," *InTech*, March 1982.

Comins, C., "International Practice for Electronic Monitoring Equipment," *InTech*, October 1980.

International Electrotechnical Commission, IEC 60079–0 (2000–06), "Electrical Apparatus for Explosive Gas Atmospheres. Part 0: General Requirements," Geneva, 2000.

International Electrotechnical Commission, IEC.60079–2 (2001–02), "Electrical Apparatus for Explosive Gas Atmospheres. Part 2: Pressurized Enclosures 'p'," Geneva, 2001.

International Electrotechnical Commission, IEC.60079–5 (1997–04), "Electrical Apparatus for Explosive Gas Atmospheres. Part 5: Powder Filling 'q'," Geneva, 1997.

International Electrotechnical Commission, IEC.60079–6 (1995–04), "Electrical Apparatus for Explosive Gas Atmospheres. Part 6: Oil Immersion 'o," Geneva, 1995.

International Electrotechnical Commission, IEC.60079–7 (2001–11), "Electrical Apparatus for Explosive Gas Atmospheres. Part 7: Increased Safety 'e'," Geneva, 2001.

International Electrotechnical Commission, IEC.60079–10 (2002–06), "Electrical Apparatus for Explosive Gas Atmospheres–Part 10: Classification of Hazardous Areas, Geneva, 2002.

International Electrotechnical Commission, IEC.60079–11 (1999–02), "Electrical Apparatus for Explosive Gas Atmospheres. Part 11: Intrinsic Safety 'i'," 1999 Geneva, 1999.

International Electrotechnical Commission, IEC 60079–14 (1996–12), "Electrical Apparatus for Explosive Gas Atmospheres. Part 14: Electrical Installations in Hazardous Areas (Other Than Mines)," Geneva, 1996.

International Electrotechnical Commission, IEC.60079–13 (1982–01), "Electrical Apparatus for Explosive Gas Atmospheres. Part 13: Construction and Use of Rooms or Buildings Protected by Pressurization," Geneva, 1982.

International Electrotechnical Commission, IEC.60079–15 (2001–02), "Electrical Apparatus for Explosive Gas Atmospheres. Part 15: Type of Protection 'n'," Geneva, 2001.

International Electrotechnical Commission, IEC.60529 (2001–02), "Degrees of Protection Provided by Enclosures (IP Code), " Geneva, 2001.

© 2003 by Béla Lipták

Instrumentation, Systems, and Automation Society, ISA-12.00.01–1999 (IEC 60079–0 Mod), "Electrical Apparatus for Use in Class 1, Zones 0, 1 & 2 Hazardous (Classified) Locations: General Requirements," Research Triangle Park, NC, 1999.

Instrumentation, Systems, and Automation Society, ISA-12.01.01–1999, "Definitions and Information Pertaining to Electrical Instruments in Hazardous (Classified) Locations," Research Triangle Park, NC, 1999.

Instrumentation, Systems, and Automation Society, ISA-12.02.01–1999 (IEC 60079–11 Mod), "Electrical Apparatus for Use in Class 1, Zones 0, 1 & 2 Hazardous (Classified) Locations: Intrinsic Safety 'i'," Research Triangle Park, NC, 1999.

Instrumentation, Systems, and Automation Society, ISA-TR12.2–1995, "Intrinsically Safe System Assessment Using the Entity Concept," 1995.

Instrumentation, Systems, and Automation Society, ISA-RP12.2.02–1996, "Recommendations for the Preparation, Content, and Organization of Intrinsic Safety Control Drawings," Research Triangle Park, NC, 1996.

Instrumentation, Systems, and Automation Society, ISA-RP12.4–1996, "Pressurized Enclosures," Research Triangle Park, NC, 1996.

Instrumentation, Systems, and Automation Society, ISA-TR12.06.01–1999, "Electrical Equipment in a Class 1, Division 2/Zone 2 Hazardous Location," Research Triangle Park, NC, 1999.

Instrumentation, Systems, and Automation Society, ISA Standard S12.10, "Area Classification in Hazardous (Classified) Dust Locations," Research Triangle Park, NC, 1988.

Italian Electrotechnical Committee (Comitato Elettrotecnico Italiano), CEI 31-35: Electrical Apparatus for Explosive Atmospheres—Guide for Classification of Hazardous Areas.

Krigman, A., "Instruments and Safety," *InTech*, February 1983.

Magison, E.C., "Electrical Safety in Hazardous Locations," Instrumentation, Systems, and Automation Society Publication, Research Triangle Park, NC, 1983.

Magison, E.C., Intrinsic Safety," Instrumentation, Systems, and Automation Society Publication, 1984.

Merritt, R., "U.S. Embraces Intrinsic Safety," *Control*, June 2001.

Mostia, W., "Explosion-Proof verses Intrinsically Safe," *Control*, June 1997.

National Fire Protection Association, NFPA-493-T, "Intrinsically Safe Process Control," Quincy, MA.

National Electrical Code, National Fire Protection Association, Art. 500–503, Quincy, MA, 2002.

National Fire Protection Association, NFPA 497M, "Classification of Gases, Vapors and Dusts for Electrical Equipment," Quincy, MA, 1983.

Oudar, J., "Intrinsic Safety," *Journal of the Southern California Meter Association*, October 1981.

Owen, T., "Driving the Intrinsically Safe Bus," *Control*, June 1998.

Peterson, J., "A Universal Approach for Hazardous-Area Classifications," *InTech*, June 2001.

Piper, P., "A Prescription for Intrinsic Safety," *Control*, January 1998.

Redding, G., "Intrinsically safety Instrumentation," *Safety Technology Ltd.*, Norfolk, U.K., 1982.

Spadaro, B., Process Monitoring in Hazardous Environments," *InTech*, February 1983.

Squires, R.W., "Is Intrinsic Safety Ready for Fieldbus?," *InTech*, November 1993.

Stockdale, B., "World Market Demands Spawn Innovative Enclosure Designs," *Measurements and Control*, February 1990.

© 2003 by Béla Lipták

7.3 Electrical Meters and Sensors

P. M. GLATTSTEIN (1972, 1982) **B. G. LIPTÁK** (1995)
P. M. B. SILVA GIRÃO (2003)

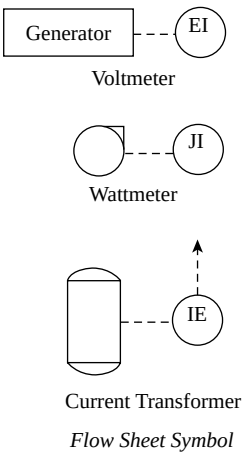

Flow Sheet Symbol

Meter Types and Accessories:
A. Permanent magnet moving coil meter
B. Permanent magnet moving coil with electronics
C. Moving iron vane meter
D. Electrodynamic meter
E. Electrostatic meter
F. Digital meter
G. Current transformer
H. Shunt
I. Potential transformer
J. Resistor for DC voltmeters
(Note: See the Orientation Table 7.3a for a summary of volt, watt, and ammeter features.)

Ammeter Choices and Accessories:
For AC current: B, C, or F
For high-range AC current: B, C, or F with G
For DC current: A or F
For high-range DC current: A or F with H

Voltmeter Choices and Accessories:
For AC voltage: B, C, or F
For high-range AC voltage: E; or B, C, or F with I
For DC voltage: A or F
For high-range DC voltage: E; or A or F with J

Wattmeter Choices and Accessories:
For one or three-phase AC power: D or F with G and H
For DC power: D or F
For high-range DC power: D or F with H

Inaccuracy:
A. 0.3 to 2% of full scale
B. 3% of full scale
C, D. 0.5 to 2% of full scale
E. 0.5 to 2% of full scale
F. From a few ppm to 2% of full scale
G. 0.6 to 1.2% of secondary rating
H. 0.25% of shunt rating
I. 0.3 to 0.6% of secondary rating
J. 0.25% of resistor rating

Costs:
A, C, F, and G: about $50
B and I. About $150
D. About $500
E. About $500
F. From about $100 to up to a few thousand dollars for special purpose meters
I. From 230 V AC to 120 V AC at 100 to 500 W, about $50; to 1000 W, about $100.

The cost range of handheld, battery-operated digital multimeters capable of detecting temperature, AC and DC current and voltage, resistance, frequency, and capacitance is about $125. Clamp-type AC current testers also cost about $125. A kW transducer for single or three-phase and three- or four-wire systems costs about $500. A power

© 2003 by Béla Lipták

analyzer that displays and detects 12 energy parameters (including true RMS voltage and current, instantaneous and average power factors, etc.), all at 1% of measurement inaccuracy, costs about $2500. A universal power analyzer with DC rectifier measurements costs about $10,000.

Partial List of Suppliers:

Agilent Technologies (www.agilent.com)
Ametek Power Instruments (www.rochester.com)
Amprobe Instruments (www.amprobe.com)
Anritsu Corporation (www.anritsu.com)
AVO International (www.avoint.com)
Boonton Electronics (www.boonton.com)
Campbell Scientific, Inc. (www.campbellscientific)
Chauvin Arnoux Métrix SA (www.chauvin-arnoux.com)
CROPICO Ltd. (www.cropico.com)
Dranetz BMI (www.dranetz.com)
Electronics Product Design, Inc. (www.epd.com)
Farnell (www.farnell.com)
Fluke Corp. (www.fluke.com)
GE Industrial Systems (www.geindustrial.com)
GMC Instruments Inc. (www.gmcinstruments.com)
Hameg Instruments (www.hameg.com)
Hioki USA Corporation (www.hiokiusa.com)
Indotech Devices Pvt. Ltd. (www.indotechonline.com)
Keithley Instruments Inc. (www.keithley.com)
Kyoritsu Electrical Instr. Works, Ltd. (www.kew-ltd.co.jp)
Langlois SARL (www.langlois-france.com)
Leader Electronics Corp. (www.leader.co.jp)
RS Electronics (www.rselectronics.com)
Simpson Electric Corp. (www.simpsonelectric.com)
Teradyne (www.teradyne.com)
Triplett Corp. (www.triplett.com)
Yokogawa Electric Corporation (www.yokogawa.com)
Weschler Instruments (www.weschler.com)

INTRODUCTION

The direct measurement of electrical quantities is the topic of this section. Indicators, recorders, and other display devices are discussed in the *Process Control* volume of this handbook and are not covered here. Also not covered are instruments and methods that allow access to electrical quantities values by indirect means such as those using measuring transducers. While this section concentrates on the measurement of current, voltage, and wattage, instruments such as handheld multimeters that are listed in the feature summary at the beginning of this section can also measure other quantities, namely, resistance, frequency, capacitance, and temperature.

Electrical quantities can be measured by either analog or digital instruments. Analog instruments display the value of the quantity by the position of a pointer on a scale, while digital instruments display the same value numerically. In both cases the absolute value of the reading is a function of the selected range.

Digital measuring instruments have many advantages over analog ones making them attractive and popular. They are easier to read, provide higher resolution (up to 1 part in 2×10^8), and better accuracy (up to a few parts per million). They also are capable of remote operation and can provide multifunction capabilities when used with transducers. Analog instruments find their use restricted to special applications, namely, when the advantage of a continuous display provided by the position of a pointer on a scale is important. This is the case in the detection of a critical value or limit and when the rate at which a quantity is changing needs to be detected (e.g., null detection).

ANALOG MEASURING INSTRUMENTS

Analog electric meters have been in use for nearly two centuries thanks to the discoveries of Oersted (1819), Ampere (1821), Faraday (1821), Kelvin (1867), D'Arsonval (1881), and Weston (1889). There are four basic types of analog measuring instruments: permanent magnet moving coil instruments (PMMCs), moving iron vane instruments, electrodynamic instruments, and electrostatic instruments. The permanent magnet moving coil instrument can be upgraded using electronic components (rectifiers and amplifiers) and thermoelectric converters.

There is an element in all analog sensors and to that element a pointer is attached. This element, when subjected to a torque, is allowed to rotate around an axle. A spring might be used to apply a counter-clockwise restoring torque to the axle, while the measured quantity generates an acting torque

© 2003 by Béla Lipták

TABLE 7.3a
Orientation Table for Ammeters, Voltmeters, and Wattmeters

Meters	*Type of Meter*	*Accessories Required*	*Full-Scale Meter Range (A, Amperes; V, Volts; W, Watts)*	*Permissible Overload in Multiple of Full Scale and for Noted Time Duration*	*Recommended Applications*
AMMETERS					
AC	Rectifier	None	$0.5–20 \times 10^{-3}$ A	*For meters:* 1.2×: 8 hr	Low-range, high frequency
	Moving iron vane	None	1–50 A	100× 1 sec	General use up to 750 volts
	Moving iron vane	Transformer	10–8000 A	*For transformer:* 50×: 2 sec	High-range, over 750 volts, long meter leads
	Digital	None	200×10^{-6} A–10 A	Varies, often protected	General use, medium frequency
	Digital	Transformer/ Hall effect probe	2–1000 A		High range medium frequency
DC	Permanent magnet moving coil	None	0.02×10^{-3} 50 A	1.2×: 8 hr	General use
	Permanent magnet moving coil	Shunt	20–20,000 A	100×: 1 sec	High-range
	Digital	None	200×10^{-6} A–10 A	Varies, often protected	General use
	Digital	Current probe	2–1000 A		High range
VOLTMETERS					
AC	Rectifier	None	3–800 V	For meters: 1.2×: continuous	Low-range, high-frequency
	Moving iron vane	None	3–600 V	100×: 1 sec	General use
	Moving iron vane	Transformer	150–18,000 V	For transformer: 1.1×: continuous 1.25×: 1 min	High-range, circuit isolation
	Electrostatic	None	10–1000 V		High range
	Digital	None	100×10^{-3}V–750 V	Varies, often protected	General use, medium frequency
DC	Permanent magnet moving coil	None	1–600 V	1.2×: continuous 100×: 1 sec	General use
	Permanent magnet moving coil	Resistor	250–30,000 V		High-range, high-sensitivity
	Digital	None	100×10^{-3}V–750 V	Varies, often protected	General use
WATTMETERS					
	1-element electrodynamic	None	125–1000 W	*For current:* 1.2×: continuous 100×: 1 sec	Low power, single-phase 2-wire circuits
	Digital	None	2 mW – 15000 W		General use, single-phase 2-wire circuits
Single-phase AC	1-element electrodynamic	Transformer	$1000–100 \times 10^{6}$ W	*For current:* 1.2×: continuous 10×: 1 sec	General use, single-phase circuits
Three-phase AC	2-element electrodynamic	Transformer	$1000–100 \times 10^{6}$ W		General use, three-phase, three-wire
	$2^{1}/_{2}$-element electrodynamic	Transformer	1×10^{4}–1×10^{8} W		General use, three-phase, four-wire
	Digital	None	2 mW–15000 W		General use, three-phase, three or four-wire
DC	1-element electrodynamic	None	100–2000 W		General use, low-power
	Digital	None	2 mW – 15000 W		General use

© 2003 by Béla Lipták

(or motor torque). If this torque exceeds the restoring torque generated by the spring, a new angular position is established. The stability of the system is a function of the acceleration of the rotating system and of the amount of damping (damping torque), which is mainly a function of the speed of the system. Because the inertial and damping torques exist only when the rotating system is in motion, the final position of the pointer depends only on the motor and restoring torques.

For mechanical reasons, the rotating system has a low-pass characteristic with a typical cutoff frequency of 1 Hz, which means that it only reacts to motor torques of frequencies lower that 1 Hz. For normal applications, only the DC component of the motor torque is inside the bandwidth of the system. Therefore, the final position of the pointer results from the balance between that component of the motor torque and the restoring torque.

Permanent Magnet Moving Coil Instruments

More commonly known as the D'Arsonval type, these instruments consist of a pointer attached to a coil of fine wire suspended between the poles of a permanent magnet (Figure 7.3b). Current through the coil creates a magnetic field that reacts with the field of the permanent magnet, causing a motor torque proportional to the intensity of current.[1]

The coil shaft is usually mounted on jeweled bearings, and hairsprings provide the force necessary to restore the pointer to zero (restoring torque). An alternative method is to support the coil by flat metal bands attached to a supporting framework. The bands carry current to the coil and furnish the necessary restoring force. Permanent magnet moving coil meters are accurate and sensitive, consume small amounts of power, possess linear display scales, and are widely used to measure DC current and voltage. Since the field of the permanent magnet is static, the torque depends on the direction of the current in the coil.

The two terminals of the instrument are usually identified either by color (red is positive) or by plus and minus symbols

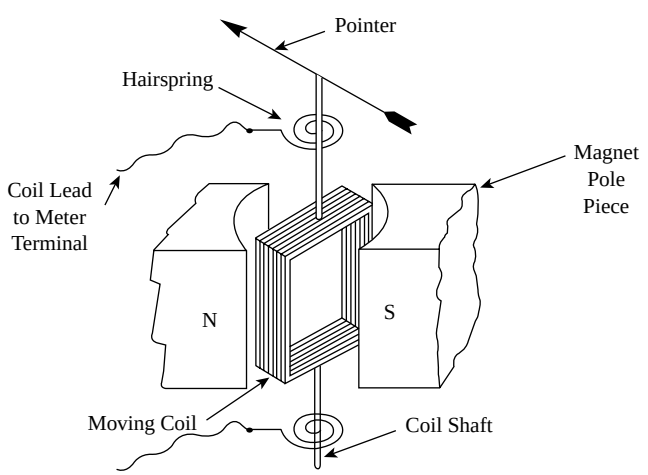

FIG. 7.3b
Internal construction of a permanent magnet moving coil meter.

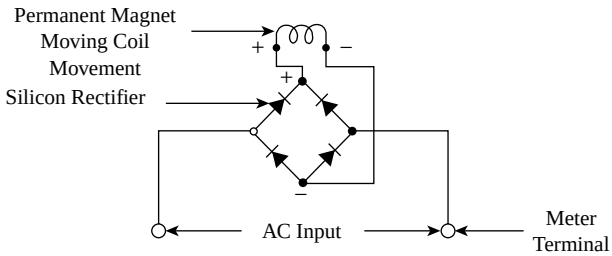

FIG. 7.3c
Rectifier movement with full wave bridge circuit.

to indicate the connecting mode that produces a correct deflection: clockwise for 0 left meters and clockwise or anticlockwise for 0 center meters. Even if some models are provided with means of switching a current's direction, care should be taken when connecting this type of instrument.

Electronic Components The addition of electronic components to a PMMC meter can provide:

1. Extended measuring bandwidth up to the hundreds of megahertz
2. Increased measuring range and sensitivity
3. Improved input impedance

For AC measurements, a PMMC can be combined with silicon rectifiers, which are arranged in a half or full wave bridge (Figure 7.3c). Rectifier current ratings limit these meters to relatively low ranges of AC current and voltage measurements. A wide band of frequencies can be accommodated because accuracy is not affected by frequency. Scales are essentially linear with some crowding at the lower end, because of changes in rectifier values at very low currents. Meters must be calibrated to read effective or root mean square (RMS) values since the instrument responds to average AC values.

The addition of amplifiers to PMMCs improves their measuring range, sensitivity and input impedance. The simultaneous inclusion of amplifiers and rectifiers allows the implementation of instruments that are basically voltmeters, but that can be used to measure current, for instance, by measuring the voltage drop it produces on a calibrated resistor. These voltmeters are sometimes referred to as electronic voltmeters. They have very high input impedance (very low power consumption), are sensitive, and possess both a large bandwidth and a wide measuring range.

The main limitation of these instruments (Figure 7.3d) is that the indication depends on the input waveform. PMMC electronic meters that do not have this limitation are usually identified as true RMS meters. They make use of thermoelectric converters that replace the rectifier and produce a DC quantity whose value equals or is proportional to the root mean square of the AC quantity to be measured. Able to operate up to some 100 MHz, PMMCs with thermoelectric converters and amplifiers are the wider bandwidth true RMS analog electrical measuring instruments and have ranges from millivolts up to a few hundred volts.

© 2003 by Béla Lipták

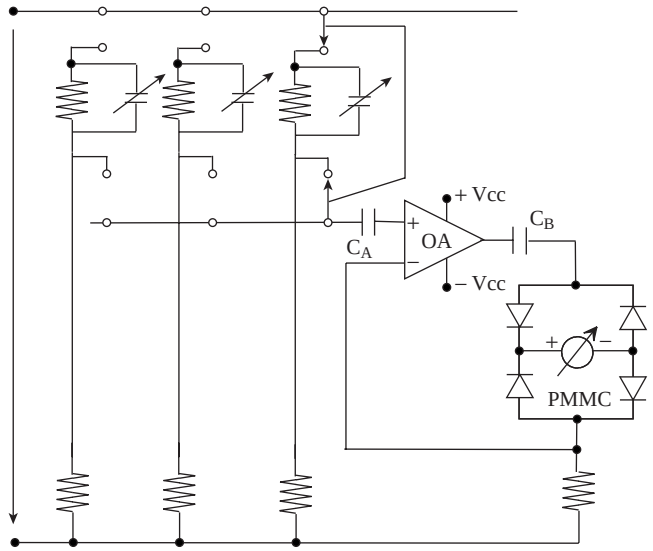

FIG. 7.3d
Block diagram of an AC PMMC based electronic meter.

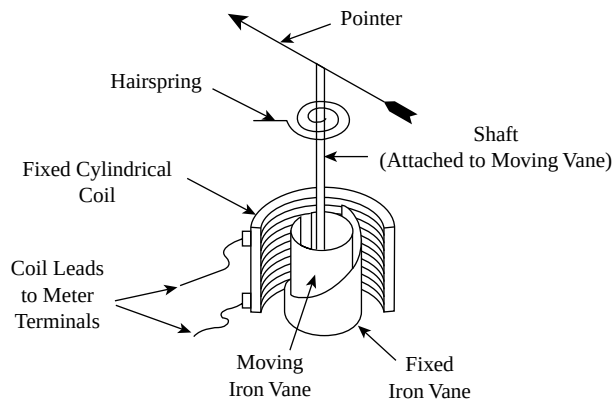

FIG. 7.3e
Internal construction of a moving iron vane-type meter.

Moving Iron Vane Instruments

These instruments consist of two cylindrical soft iron vanes mounted within a fixed current-carrying coil (Figure 7.3e). One vane is held immobile and the other is free to rotate, carrying with it the pointer shaft. Current in the coil induces both vanes to become magnetized, and repulsion between the similarly magnetized vanes produces a proportional rotation (repulsion moving iron vane). The motor torque is proportional to the square of the current in the coil, making the instrument a true RMS meter. A hairspring provides the restoring torque.

Only the fixed coil carries current, and the meter may be constructed so as to withstand high current flows. Moving iron vanes instruments may be used for DC current and voltage measurement. However, small DC errors due to residual magnetism cause them to be more widely utilized for AC current and voltage detection even though sensitivity is low and power consumption is moderately high. These instruments

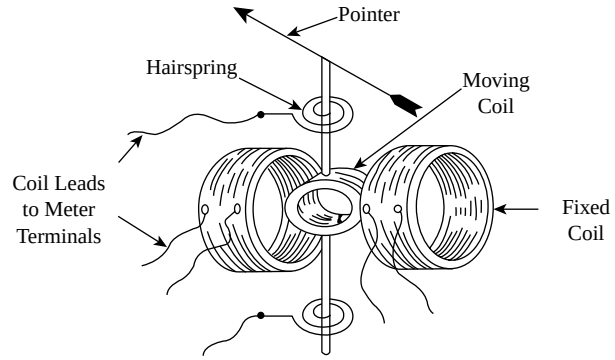

FIG. 7.3f
Internal construction of an electrodynamic meter.

indicate effective or root mean square values and are subject to minor frequency errors only.

Even if their bandwidth can reach the few hundred hertz, their errors depend slightly on frequency. They should be used in a narrower band, usually 40 to 60 Hz. Their scales are nonlinear and somewhat crowded in the lower third, because the deflection of the pointer is approximately proportional to the square of the coil current.

Electrodynamic Instruments

These instruments are similar to the PMMC-type elements except that the magnet is replaced by two serially connected fixed coils that produce the magnetic field when energized (Figure 7.3f). The motor torque is proportional to the product of currents in the moving and fixed coils. These instruments can measure AC or DC current, voltage, and power. In the first two cases, the moving and fixed coils are serially connected. For power measurement, one of the coils (usually the fixed) passes the load current and the other coil passes a current proportional to the load voltage.

Cost and performance compared with other types of instruments restrict the use of this design to AC and DC power measurement. When used for power measurement, its scale is linear (calibrated in average values for AC). Its accuracy is high but its sensitivity is low. The bandwidth of electrodynamic instruments goes from DC to a few hundred hertz. Similarly to moving iron vane instruments, the electrodynamic instruments are true RMS responding meters.

Electrostatic Instruments

In contrast with the three meter types already mentioned, the motor torque of electrostatic instruments is due to electric interaction of charge distributions. Figure 7.3g represents a common implementation of the instrument (rotating-plate type). It is a capacitor with a fixed and a moving semicircular plate. The plates are mounted on a shaft that also supports the pointer. When a voltage is applied to the capacitor, the charge distribution on the plates produces an attractive torque that tends to bring the plates closer. The motor torque is proportional

© 2003 by Béla Lipták

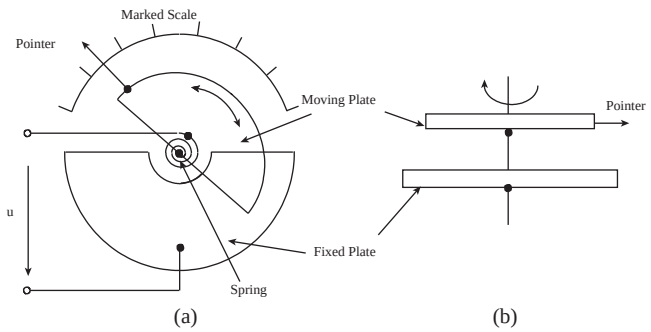

FIG. 7.3g
Internal construction of an electrostatic meter.

to the square of the voltage between the two plates and the restoring torque is, as usual, generated by a spiral spring.

Because of their high input impedance, electrostatic instruments are used only as voltmeters. The motor torque also depends on the derivative of capacitor's value. For mechanical reasons, this derivative is small so that a motor torque able to produce a significant angular displacement of the moving plate is only possible for voltages higher than some tens of volts. For this reason, and in spite of its large bandwidth (from DC up to some tens of MHz) and high input impedance, electrostatic voltmeters are used mainly in high voltage measurements. Today the name electrostatic voltmeter is also used to designate electronic voltmeters that measure voltage without charge transfer.[2]

DIGITAL MEASURING INSTRUMENTS

In the last few decades, the development of sensors and instrumentation have been influenced by the technologies of solid state electronics and integrated circuitry. As cost effective analog-to-digital converters (ADCs) became available, instrumentation shifted from analog to digital. This trend was reinforced by the convenience of automation of digital instruments.

Figure 7.3h represents a simplified block diagram of a digital instrument. The value displayed results from the output of an ADC. The input conditioner circuits serve to transform the measured quantity into a proportional DC voltage or current signal that is within the range of the ADC. The nature of the signal conditioner depends on the quantity or quantities to be measured and on the characteristics of the meter. Finally, the controller circuitry supports the required control functions.

For a true RMS digital multimeter, Figure 7.3i details the block diagram in Figure 7.3h. Assuming that the ADC operates on voltage, the input voltage and current must both be converted into a DC voltage. If the input is a DC voltage, only attenuation may be needed. If the input is AC, the attenuated voltage must be sent to a circuit that is able to produce a DC voltage whose value is equal to the RMS of its input voltage.

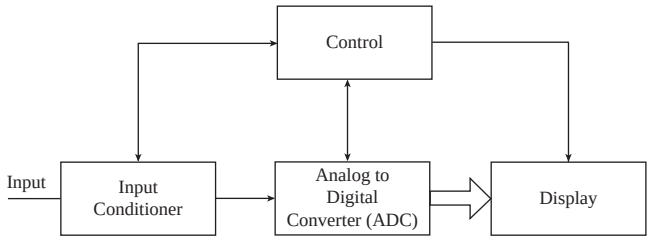

FIG. 7.3h
Simplified block diagram of a digital meter.

There are several possible solutions to implement such a circuit (named RMS converter). These include those that are based on the definition of RMS value and on the thermal effects associated with an electric voltage.

A wide range of measurements can be covered by digital voltage and current sensing instruments. Typical ranges of general purpose $3^1/_2$ digittrue RMS multimeters are from 2 mA to 2 A, or from 200 mV to 200 V. Their inaccuracy is around 0.5% of full scale and bandwidth 0 to 50 kHz.

Wattmeters

Instantaneous power is the product of the instantaneous values of the current and voltage, while active power is the time-averaged value of instantaneous power. Figure 7.3j shows a possible implementation of a single-phase digital wattmeter. The value presented in the display is calculated from the digitized values of current and voltage. It is obtained by processing the current and voltage signals in conditioning circuits prior to their being converted by the ADCs. The sample and hold circuits are placed before the ADCs to assure DC inputs for the converters during their conversion times.

Since the instrument includes a processing unit, several other electric and nonelectric quantities can be derived and displayed: RMS values of current and voltage, reactive power (sine wave input), phase angle, energy, period, etc. The design shown in Figure 7.3j allows measurement of both AC and DC power.

UTILIZATION OF ELECTRICAL METERS

Current Measurement

AC Current Alternating current indicators are almost exclusively of the moving iron vane type because of their wide range and low sensitivity to frequency variations (less than the electrodynamic type) and waveform errors, and digital.

Moving iron vane meters in ranges from 1 to 50 A full scale can be used for higher current ranges by the addition of external current transformers. Operating voltage is limited to approximately 750 V. Above this level a current transformer must be used even if the current is within the meter rating.

© 2003 by Béla Lipták

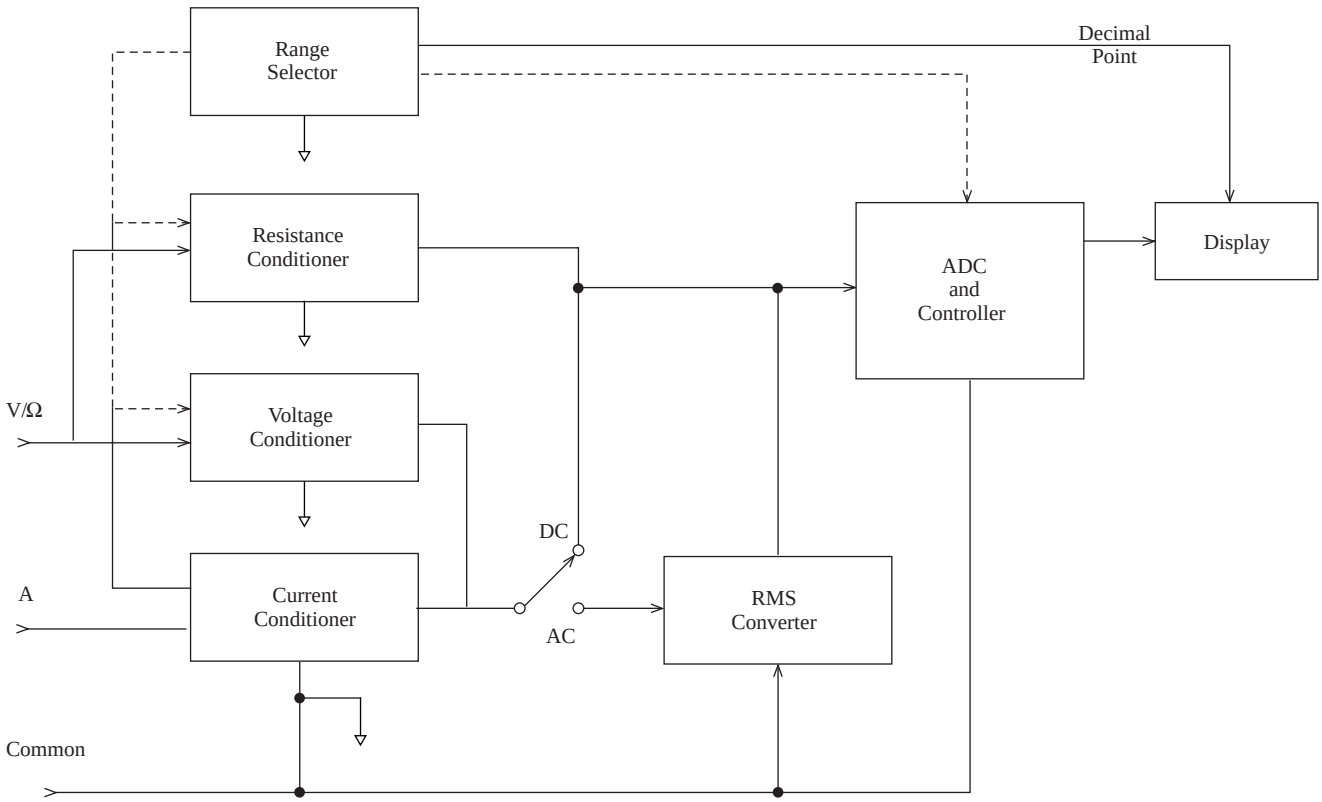

FIG. 7.3i
Digital meter: detailed block diagram.

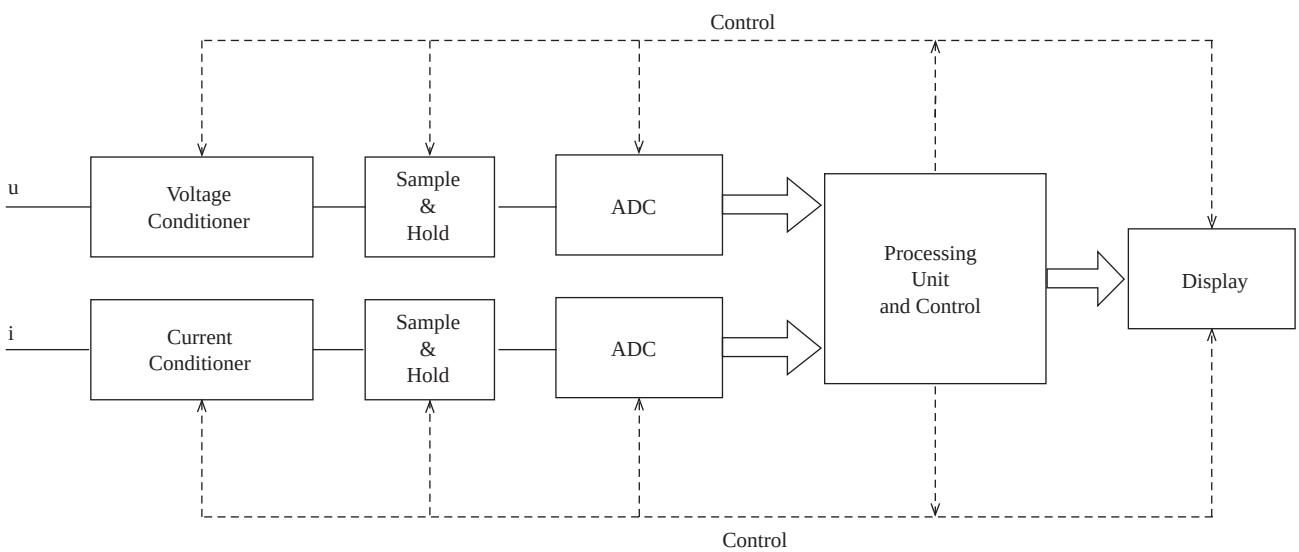

FIG. 7.3j
Block diagram of a digital wattmeter (sampling type).

Meters calibrated for 60 Hz are usable from 25 to 400 Hz, with an additional error of only 1/2% full scale and may be recalibrated for use at levels as high as 1000 Hz. For measurement of small currents at frequencies above 400 Hz, or when variable frequencies must be measured, digital meters and electronic PMMC meters should be used.

This meter is available in ranges from 500 μA to 20 mA full scale and may be used from 20 to 10,000 Hz without loss of accuracy on sine wave circuits. The upper limits of current and frequency for digital meters are 10 A and 50 kHz with an inaccuracy of about 5%. For higher values of current, current probes (current transformers or Hall effect type) must be used.

© 2003 by Béla Lipták

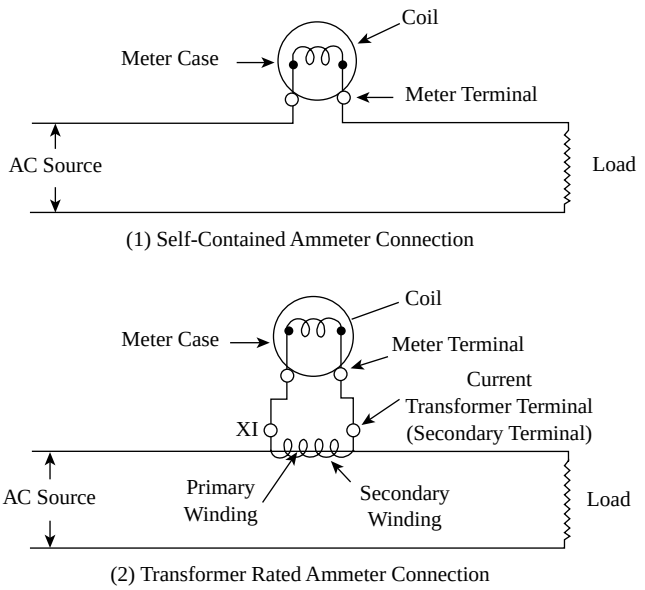

FIG. 7.3k
Alternating current ammeter connections.

Current Transformers

For current measurement above the range of moving iron vane and digital meters, a current transformer is the easiest and cheapest solution. When inserted in the circuit, it provides the proper ratio between the meter range and the measured current (Figure 7.3k). Most current transformers are designed to deliver 5 A at the secondary terminals when full primary current is flowing. The primary winding can be the current carrying conductor, which is passed through the center of the secondary winding in the form of a single-turn coil. This design requires no mechanical connection or break in insulation.

Primary Turns Selection of the current transformers ratio should be based on the closest standard primary rating over the maximum current to be measured. Because there are large intervals between standard primary ratings for current transformers, it is often desirable to modify the transformer ratio by passing the primary conductor through the center of the secondary winding two or more times. A typical current transformer with a rating of 100 to 5 A has a normal ratio of 1 primary turn to 20 secondary turns or 1:20.

Passing the primary conductor through the center of the secondary winding twice (Figure 7.3l) increases the primary turns to two. Therefore, the ratio becomes 1:10, giving a new rating of 50:5 A. By taking additional primary turns, the rating may be modified to correspond more closely to the desired scale.

Secondary Turns The new primary rating is determined by dividing the original primary rating by the number of turns taken. Small adjustments to the transformer ratio may be made by passing one of the secondary leads through the center of

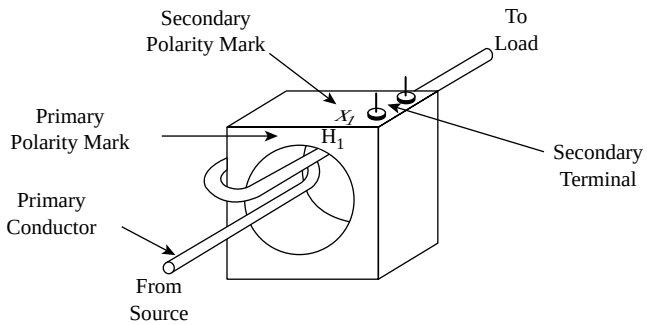

FIG. 7.3l
Current transformer with two primary turns added.

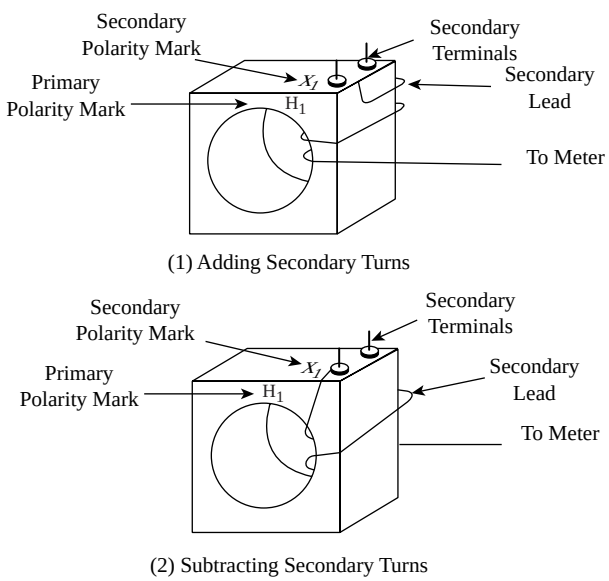

FIG. 7.3m
Modifying the number of secondary turns on a current transformer.

the secondary winding so as to effectively add or subtract secondary turns (Figure 7.3m). A current transformer with a 100 to 5 A rating has 20 secondary turns. Therefore, the addition of one secondary turn changes the turns ratio to 1:21, for a new rating of 105:5 A. By adding or subtracting the required number of secondary turns, the rating may be adjusted to almost any value. The new primary rating is determined by secondary rating, which is 5 A in all cases. When both primary and secondary turns are modified, the new primary rating may be calculated by Equations 7.3(1) and 7.3(2):

$$\text{original secondary turns} = \frac{\text{original primary turns}}{\text{secondary rating}} \qquad \textbf{7.3(1)}$$

$$\text{adjusted primary rating} = \frac{(\text{total secondary turns})\,(\text{secondary rating})}{\text{primary turns}} \qquad \textbf{7.3(2)}$$

© 2003 by Béla Lipták

Polarity and Inaccuracy Primary and secondary polarity markings are provided on current transformers with the primary identified as H1 and the secondary terminal as X1. To add secondary turns, one should connect a lead to terminal X1 and pass it through the center of the secondary winding from the side opposite the H1 polarity mark, as indicated in Figure 7.3m. To subtract secondary turns, connect a lead to terminal X1 and pass it through the secondary winding from the same side as the H1 polarity mark.

Current transformer inaccuracy is expressed as the maximum error for a particular load class as specified by the United States Standards Institute. Although load inaccuracy data are available from the meter manufacturers, it is seldom necessary to check the meter. This is because if the meter is listed as transformer rated, it is also designed to maintain its accuracy when it is connected with #14 AWG leads at lengths up to 150 ft (45 m) and #12 AWG leads at lengths up to 250 ft (75 m).

Current transformers are generally insulated for use on systems up to 600 V, but 600 V transformers may be used at higher voltages if the primary conductor is fully insulated. Current transformers designed for ammeters are available with 0.6 and 1.2% inaccuracy and in the following standard primary ratings: 100, 150, 200, 250, 300, 400, 500, 600, and 800 A.

Current transformers used to extend the measuring range of AC current meters must operate with a very low secondary load, close to short-circuit, to assure that the magnetization current is small enough. Care must be taken when connecting the transformer. Particularly, one should make sure that the secondary is not left open; if that happens, the magnetization current will be approximately equal to the primary current. Under these conditions the electromechanical stress to which the magnetic material is subjected can destroy it. This can occur in form of an explosion.

Hall Effect Probes

The current range of digital meters with voltage-sensing capability can also be increased using probes designed on the basis of the Hall effect. A Hall sensor detects and displays the magnetic field caused by the current and produces a voltage proportional to that current. Currents up to some hundred amperes can be measured at frequencies up to tens of kilohertz. The inaccuracy of measurement is about 3%.

DC Current

Direct current indicators are either analog or digital. The analog designs can be the PMMC type, which take advantage of the low power consumption and inherent linear scale factor, while avoiding the residual magnetic errors of the iron vane types or the slower response of electrodynamic movements.

Current carrying capacity of the internal connections to the coil of PMMC meters limits the self-contained meters to a range of 20 μA to 1 A full scale. So-called self-contained meters are available for up to 50 A; however, they are actually low-range instruments with an internal shunt. Above this range external shunts are employed. Meters are suitable for use on up to 600 V circuits. Above this value other types of meters or transducer-rated meters are generally used.

Digital current meters are available with ranges from picoamperes (useful in applications such as measurement of conductivity or low conductivity or insulating materials) to some tens of amperes. The use of shunts to extend the upper limit of that range is possible; nonetheless, Hall effect probes are more often used for that purpose.

Ammeter Shunts

Direct current ammeter ranges can be greatly extended by connecting a shunt of the proper resistance in parallel with the meter so that a specific proportion of the current passes through the meter, the remainder being carried by the shunt (Figure 7.3n). Analog meters designed for shunts are rated either at 50 or 100 mV, depending on the voltage drop across the meter terminals at full-scale deflection. When a shunt is used it must have a corresponding millivolt rating. The actual resistance value of the proper shunt does not have to be known since shunts are rated on the basis of full-scale meter current and are available from 5 to 20,000 A, calibrated to ±0.25% inaccuracy.

Shunt-rated ammeters are calibrated for a particular shunt lead resistance, factors that vary from one manufacturer to another, and the correct calibrated shunt leads should be used for maximum accuracy or the meter should be recalibrated for use with different leads. Noncalibrated shunt leads of #14 AWG wire have an additional error of 1/2% for 50-mV meters at distances up to 25 ft (7.5 m) or for 100-mV meters at distances up to 40 ft (12 m).

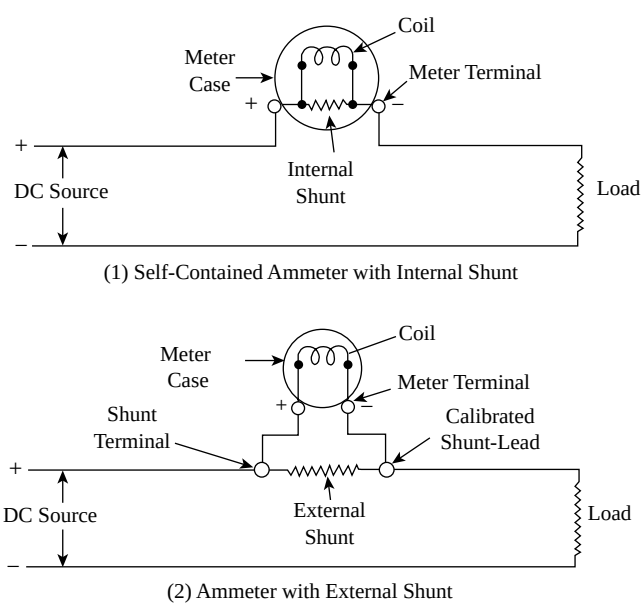

FIG. 7.3n
Direct current ammeters with internal and external shunts.

© 2003 by Béla Lipták

Voltage Measurement

AC Voltage Indicators for AC voltage measurement can be digital or analog. Analog designs include the moving iron vane, electronic PMMC, or electrostatic types. As discussed below, each has its own advantages and each is preferred for a particular voltage range.

The performance of digital voltmeters is generally superior. Their input impedance is usually higher than 1 MΩ and their ranges extend from microvolts to hundreds of volts. Their sensitivities are better than 1/2000 of full scale and their bandwidths are higher than some tens of kilohertz. Their errors are usually under 1% of full scale.

Moving iron vane voltmeters have the advantage of high accuracy and wide range, although their sensitivity is poor. Voltmeter sensitivity is determined by the coil current, which is required for full-scale detection and is expressed in ohms per volt since the coil current is inversely proportional to the total resistance. A series resistor is generally installed within the meter case to provide the total resistance required by the movement so that full voltage equals full-scale meter current.

Self-contained moving iron vane voltmeters are available in ranges from 3 to 600 V full scale. Their corresponding sensitivities range from 4 to 250 Ω/V. These meters are usually calibrated for 50 or 60 Hz; however, they may be used in circuits from 25 to 1000 Hz when calibrated for a specific frequency.

Rectifier-type PMMC meters have an advantage in that their high-resistance coils permit greatly increased sensitivity. However, due to a variety of rectifier losses, they are not as accurate as the moving iron vane type. They are available in full scale ranges from 3 to 800 V and with standard sensitivity of 1000 Ω/V at all ranges. Calibrated for 60 Hz, these meters may be used from 20 to 10,000 Hz without loss of accuracy, although they become inaccurate if used in circuits with wave shapes other than the sine wave (non true RMS meters).

Electrostatic meters have the advantage of extremely high input impedance and large bandwidth but have poor sensitivity.

Potential Transformers

For measurements on circuits above 600 V or on lower voltage circuits in which isolation is desirable, a moving iron vane meter is used with a potential transformer to provide the proper ratio between circuit voltage and meter movement (Figure 7.3o). Meters used with transformers are usually provided with a 150 V range having a sensitivity of 100 Ω/V. The corresponding potential transformers are always furnished with a ratio based on a 120-V secondary to permit indication of small over voltages. For this reason potential transformers must be selected on the basis of maximum circuit voltage and not on full-scale meter reading.

Potential transformer errors are specified by the United States Standards Institute in a manner similar to that of current transformer inaccuracy. Checking is seldom required,

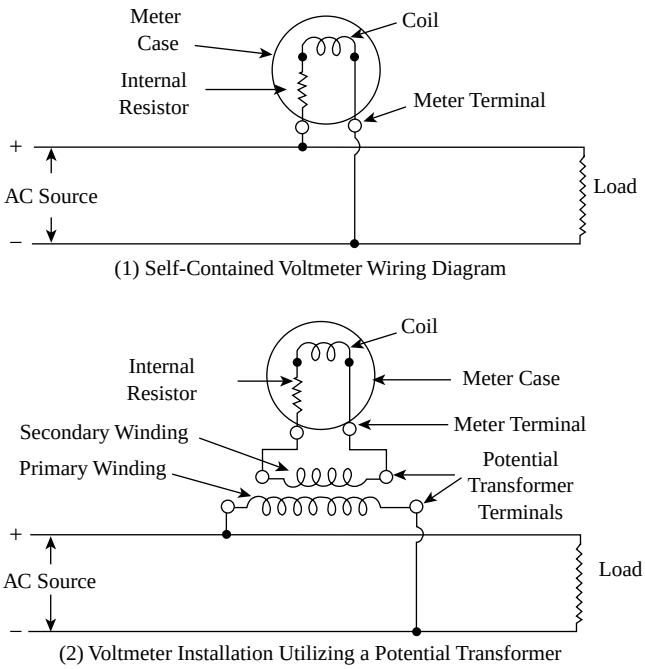

FIG. 7.3o
Alternating current voltmeter installations.

because the error is not exceeded until the lead lengths exceed several hundred feet. Potential transformers are available with primary ratings from 120 to 14,400 V and with 120-V secondary. Their inaccuracies at frequencies from 50 to 400 Hz are 0.3 to 0.6%.

When connecting potential transformers to high voltage circuits it is good practice to connect one of the secondary terminals to ground to assure that the meter and the operator work at low potentials relative to the ground. Due to the capacitance between the primary and secondary windings, allowing the secondary to float may lead to high potentials in the secondary.

DC Voltage Almost all analog meters for DC voltage measurement are of the PMMC type because of their high sensitivity, linear scale, and wide range. Self-contained DC voltmeters are available in ranges from 1 to 600 V full scale with a standard sensitivity of 1000 Ω/V in all ranges. Above this range, self-contained meters are not available because their internal resistance would become very high and resistor losses would result in excessive heating.

External resistors can be used on circuits above 600 V to extend the measurement range of the PMMC. Circuit isolation is not possible in this arrangement, and the meter will be damaged if the external resistor is accidentally shorted. Instruments with sensitivities of up to 20,000 Ω/V are available, although not in all ranges.

Digital voltmeters for DC voltage measurement have the same metrological characteristics as do the AC digital voltmeters already discussed. To measure voltages that are higher than the upper range of the instrument, voltage dividers are used.

© 2003 by Béla Lipták

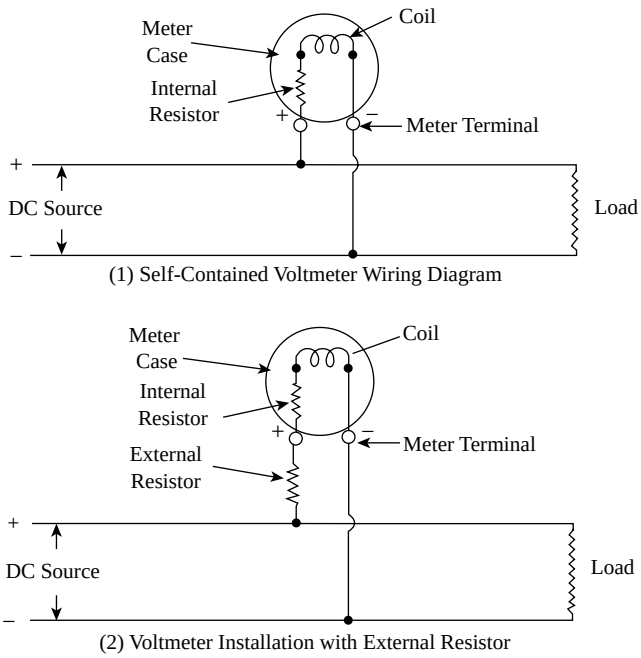

FIG. 7.3p
Direct current voltmeter installations.

These can be either of the resistive or preferably of the capacitive type.

Voltmeter Resistors Inserting an external resistor of the proper value in series with a PMMC voltmeter (Figure 7.3p) permits measurement of higher voltages or increased sensitivity at low ranges. Meters with external resistors generally have 1 mA movements and 125Ω internal resistance. Standard resistors designed to afford a sensitivity of 1000 Ω/V may be selected on the basis of full-scale meter reading without the necessity of calculating resistance. Standard resistors are available in voltage ratings from 250 to 30,000 V, and resistors for nonstandard voltages may be calculated using Equations 7.3(3) and 7.3(4):

$$\text{total resistance} = \frac{\text{full-scale meter reading}}{\text{full-scale meter current}} \qquad \textbf{7.3(3)}$$

$$\text{external resistor value} = \text{total resistance} - \text{meter resistance} \qquad \textbf{7.3(4)}$$

Instruments requiring less current for full-scale deflection permit greater sensitivity. Once the total resistance has been determined for a particular voltage range, the new sensitivity may be calculated by using Equation 7.3(5) below:

$$\text{sensitivity} = \frac{\text{total resistance}}{\text{full-scale meter reading}} \qquad \textbf{7.3(5)}$$

Measurement accuracy is not noticeably affected by lead length because the value of the external resistor is usually very high. The calibrated inaccuracies of these units are ±0.25%.

Power Measurement

The unit of electric power is the watt, which equals 1 J of work or 1 J of energy per second (W = J/s). The watt is also equivalent to 3.4 Btu/hr or 0.001341 hp. The power in a DC electric circuit is the product of the current flowing through it and the voltage existing across it. In AC circuits, the instantaneous power, p, is:

$$p = iu \qquad \textbf{7.3(6)}$$

where i and u are the instantaneous values of current and voltage, respectively. The active power P is the time average value of the instantaneous power:

$$P = (iu)_{av} \qquad \textbf{7.3(7)}$$

If the circuit is under sine wave regime, 7.3(7) can be written under the form:

$$P = IU\cos(\phi) \qquad \textbf{7.3(8)}$$

where I = RMS value of AC current, U = RMS value of AC voltage, and ϕ = Phase angle between U and I.

The power factor, P.F. = cos(ϕ), can assume values between 1 and 0. It is 1.0 in a purely resistive circuit and is 0 in an ideal (total reactive) capacitor or inductor. In actual circuits it is always between 0 and 1.0. In other words, the power factor is the ratio between the true power and the apparent power (P_{app} = IU).

A wide variety of devices are used to measure electric power.[3] The units most widely used in industry are described below.

AC Power Analog indicators for AC power measurement are usually constructed with electrodynamic movements because the separate fixed and moving coils permit two different types of input signals for the same movement. The fixed coils are usually connected to measure currents, and the moving ones are connected to monitor voltage (Figure 7.3q). Connection of the coils in this way causes a deflection of the moving coil proportional to the instantaneous product of the circuit current and voltage. Inertia prevents the moving coil from responding quickly to current and voltage variations in AC circuits above 25 Hz, and pointer will indicate the average AC power regardless of wave shape. The way wattmeters are wired introduces a certain amount of error; this can be minimized by altering the wire connections as a function of current and voltage values being measured.

Single Element Wattmeters In the wattmeter shown in Figure 7.3q, the current in the current-carrying coils is the true load current. However, the voltage across the potential coil is higher than the load voltage by an amount equal to the voltage drop across the current coils. This arrangement will result in a positive error in power measurement by an

© 2003 by Béla Lipták

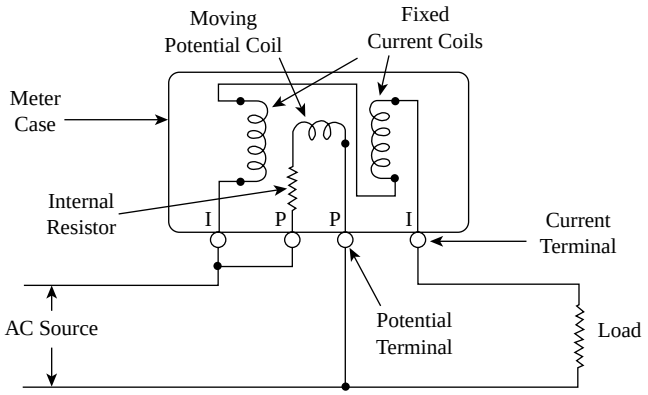

FIG. 7.3q
Single-element wattmeter, wired for accurate detection of low-current and high-voltage loads.

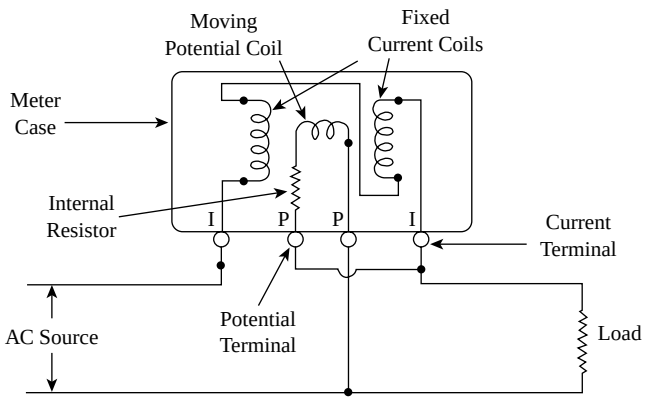

FIG. 7.3r
Single element wattmeter, wired for accurate detection of high-current and low-voltage loads.

amount equal to the power consumed by the current coils. This error will be lowest when the wattmeter is used on high-voltage circuits with low-current loads.

If the external wiring is changed, as shown in Figure 7.3r, the voltage across the potential coil will be the true load voltage. In this case, the current drawn by the potential coil will also pass through the current coil and the wattmeter reading will be high by an amount equal to the power consumed in the potential coil. The error will be lowest when the meter is used in low-voltage circuits with high-current loads.

Meter scales are linear and their accuracy is high, but low sensitivity is the result of the high power consumption. The units are usually calibrated for 50 or 60 Hz and recalibration is necessary when used at frequencies up to 400 Hz.

Wattmeters are rated for maximum current and voltage in addition to maximum wattage. This is because circuits with large phase angle differences between current and voltage (circuits with low power factor) can overload the current or voltage coils without causing large wattage readings. Power measurement in single-phase, two-wire circuits requires a single element wattmeter consisting of two fixed current coils and one moving potential coil.

The fixed current coils are wound with heavy wire as required by the meter current rating. The moving coil is usually wound with fine wire and is provided with a series resistor to ensure a high-resistance, low-inductance circuit for potential measurement.

Self-contained meters have ranges from 125 to 1000 W full scale with current ratings from 1.25 to 10 A at 120 V. Transformer-rated meters are also available. Their rating is 5 A at 120 V and their available scale ranges are from 1000 W to above 100 MW, depending on current transformer and potential transformer ratios.

Also available are wattmeters with a full scale that is a percentage (often 10%) of the product of current and voltage ranges. These instruments (low power factor wattmeters) are particularly suited for power measurement on circuits with low power factors.

Multielement Wattmeters Power measurement in three-phase,[1] three-wire circuits necessitates a two-element wattmeter (Aron method) consisting of two single-element movements with the moving coils attached to a common shaft that is wired as shown in Figure 7.3s. Each of the elements measures a portion of the power drawn by the load and adds to the common moving coil shaft a proportional torque so that the pointer will indicate total power. Using two independent single-phase wattmeters and in sine wave regime, this configuration allows the measurement of reactive power (difference between the readings of the wattmeters) and power factor.[1]

The transformers of multielement wattmeters are almost always rated with 5-A current coils and 120 to 600 V potential coils. Meter ranges from 5000 W to more than 100 MW are common, although ranges as low 1000 W are also available.

Power measurements can be made in three-phase, four-wire circuits by a three-element wattmeter. Such a design is seldom utilized because the two-element wattmeter movement can

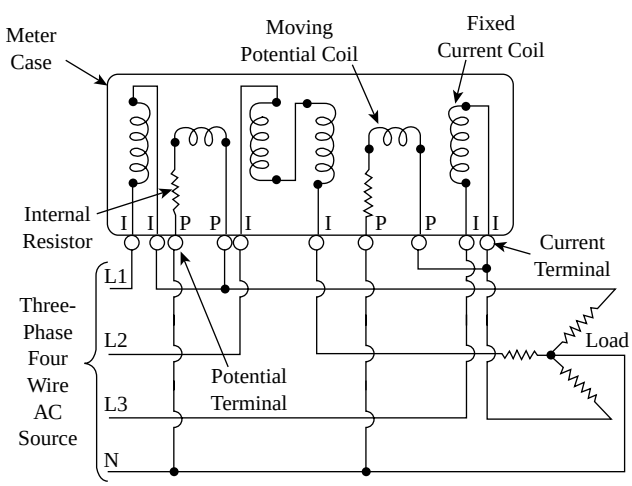

FIG. 7.3s
Two-element wattmeter wired for three-phase, three-wire loads.

© 2003 by Béla Lipták

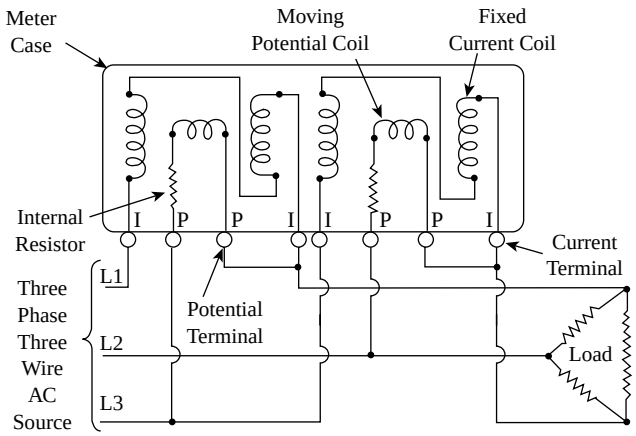

FIG. 7.3t
A $2^1/_2$-element wattmeter wired for three-phase, four-wire loads.

be modified to permit measurement on three-phase, four-wire systems by reconnecting one of the fixed coils for each element (Figure 7.3t). Meters of this type are known as $2^1/_2$-element wattmeters. They will correctly indicate power for three-phase, four-wire loads as long as the lines to neutral voltages are balanced for all three phases. Meter ranges from 10,000 W to more than 100 MW are available in this design, with ratings of 5 A at 120 or 240 V.

Digital wattmeters are available for both AC and DC applications for both single and multiphase measurements. Without using external components, the ranges can extend from a few milliwatts to some tens of thousands of watts. With the use of potential and current transformers or shunts and voltage dividers, the range can be increased depending on the characteristics of these external devices. The two wattmeter (Aron method), as shown in Figure 7.3s, is also commonly used for AC power measurement.

DC Power Direct current wattmeters are the same as single-element AC wattmeters but it is advisable to calibrate them for use on DC circuits. Ranges from 100 to 2000 W are available with ratings from 1 to 20 A at 120 V. Higher ranges may be accommodated by adding an external resistor to the potential circuit for use on high voltages, although this introduces additional errors. Because of these errors, other measuring solutions such as DC watt transducers are often used for higher ranges.

Meter Scales

In general, the best choice of meter-scale range is one in which the maximum anticipated value of current, voltage, or power will fall at 80% of the full-scale reading. Scale selection on this basis provides reasonable utilization of the meter scale, furnishing good visibility with the capability to indicate moderate overloads.

When many analog meters are grouped in a small area, it may be desirable to have all normal readings at the midscale region in order to permit easier identification of abnormal conditions. The midscale pointer position on nonlinear scales corresponds to a value of approximately 65% of full scale, while on linear displays it corresponds to a value of 50% of full scale.

References

1. Berlin, H.M. and Getz, F.C., *Principles of Electronic Instrumentation and Measurement*, Columbus, OH: Merrill Publishing Company, 1988.
2. TREK, Inc., "Electrostatic Voltmeter System," Medina, NY, January 30, 2002, www.trekinc.com/Voltmeters.htm.
3. Pedro, M.B.S.G. et al., *Volt-Ampere Meters*, New York: John Wiley & Sons, 2000.

Bibliography

Clarke, K.K. and Hess, D.T., "A 1000 A/20 kV/25 kHz-500 kHz Volt-Ampere-Wattmeter for loads with power factors from 0.001 to 1.00," *IEEE Transactions on Instrumentation and Measurement*, Vol. 45, Issue 1, February 1996, pp. 142–145.

"Current Sensor Monitors," *Instruments and Control Systems*, February 1981.

Drysdale, C.V. and Jolley, A.C., *Electrical Measuring Instruments*, London: Ernest Bern, 1924.

Dyer, S.A., *Survey of Instrumentation and Measurement*, New York: John Wiley & Sons, 2001.

Edgcumbre, K. and Ockenden, F.E., *Industrial Electrical Measuring Instruments*, London: Sir Isaac Pitman and Sons, 1933.

Golding, E.W., *Electrical Measurements and Measuring Instruments*, London: Sir Isaac Pitman and Sons, 1948.

Graf, R.F., *Measuring Circuits*, Oxford: Butterworth-Heinemann, 1997.

Harris, F.K., "Electrical Measurements," New York: John Wiley & Sons, 1952.

Ilic, D., Butorac, J., and Kresic, M., "Use of Precise Digital Voltmeters for AC Voltage Measurements," *Conference on Precision Electromagnetic Measurements Digest*, 2000, pp. 494–495.

Iwansson, K., Sinapius, G., and Hoornaert, W., *Measuring Current, Voltage and Power*, New York: Elsevier Science, 1999.

Jacobs, P. and Jadin, V., *Mesures Electriques*, Paris: Dunod,1968.

Kieffer, L.J., "Calibration and Related Measurement Services of the National, Bureau of Standards," NBS Special Publication 250, Washington, D.C., 1980.

Kollar, I., Koranyi, G., Osvath, P., Pataki, P., and Schnell, L., *Technology of Electrical Measurements*, Wiley Series in Measurement Science and Technology, New York: John Wiley & Sons, 1993.

Lai, M-F., Wu, Y-P., Hsieh, G-C., and Lin, J-L., "Design and Implementation of a Microprocessor-Based Intelligent Electronic Meter," Proceedings of the IEEE International Conference on Industrial Technology, pp. 268–272.

Lapuh, R., "Simple Power Measurement System," Proceedings of the 18th IEEE Instrumentation and Measurement Technology Conference, IMTC 2001, Vol. 2, 2001, pp. 1032–1035.

Laws, F.A., *Electrical Measurements*, New York: McGraw-Hill, 1938.

McDougall, R.S., "Measuring Small Currents," *Instruments and Control Systems*, April 1971.

Northrop, R.B., *Introduction to Instrumentation and Measurements (Electrical Engineering Systems Series)*, Boca Raton, FL: CRC Press, 1997.

Oldham, N.M., "A Measurement Assurance Program for Electric Energy," Technical Note 930, National Bureau of Standards, Gaithersburg, MD, 1976.

Pedro, M.B.S.G. et al., *Volt-Ampere Meters*, New York: John Wiley & Sons, 2000.

© 2003 by Béla Lipták

"Power Measurement and Analysis," *Measurements and Control*, December 1993.

Ramos, H.M.G. and Girao, P.S., "Low Cost Audio Analog Vector Voltmeter/Wattmeter," *Proceedings of the 7th Mediterranean Electrotechnical Conference*, Vol. 3, 1994, pp. 1201–1203.

Simonson, P., Svensson, S., and Rydler, K.-E., "A Comparison of Power Measuring Systems," *IEEE Transactions on Instrumentation and Measurement*, Vol. 46, Issue 2, April 1997, pp. 423–425.

Triger, L., "The universal electrical meter," Conference Record of the 5th IEEE Instrumentation and Measurement Technology Conference, IMTC-88, 1988, pp. 134–137.

Vountesmeri, V., "Magnetoresistive multipliers as a new base for watt-converters," *IEEE Instrumentation and Measurement Technology Conference*, IMTC/98, Vol.1, 1998, pp. 630–633.

Waltrip, B.C. and Oldham, N.M., "Wideband wattmeter based on RMS voltage measurements," *IEEE Transactions on Instrumentation and Measurement*, Vol. 46, Issue 4, August 1997, pp. 781–783.

Witte, R.A., *Electronic Test Instruments: Analog and Digital Measurements*, 2nd ed., New York: Prentice Hall, 2002.

Young, C-P. and Devaney, M.J., "Digital power metering manifold," *IEEE Transactions on Instrumentation and Measurement*, Vol. 47, Issue 1, February 1998, pp. 224–228.

© 2003 by Béla Lipták

7.4 Energy Management Devices (Peak Load Shedding)

W. D. HOULE (1982, 1995) **B. G. LIPTÁK** (2003)

Types:	A. Electromechanical B. Electronic C. Digital
Energy Saving Potential:	Up to 25% of utility bill
Number of Controllable Loads:	A. Under 10 B. Up to 16 C. Practically unlimited
Costs:	A. $500 to $1000 B. From $1000 to $10,000 C. Fully functional digital system, including control software up to $25,000
Partial List of Suppliers:	Andover Controls (www.andovercontrols.com) Barber Coleman (barber-coleman.com) Building Automation Products (www.bapihvac.com) Enercorp Instruments Ltd. (www.enercorp.com) Honeywell Corp. (www.honeywell.com/sensing) Johnson Controls (www.johnsoncontrols.com) Landis & Gyr/Powers (www.landisgyr.com) Peakload Management Alliance (www.peaklma.com) Powers (www.powerscontrols.com) Robertshaw, an Invensys Co. (www.robertshaw.com) Siemens Building Technologies (www.siemens.com) Square D Corp. (www.powerlogic.com)

INTRODUCTION

The same amount of electric power can be purchased for less, if the rate of usage is uniform, because the electric power supplier requires smaller generating and distribution equipment. When there is a peak in the demand, the utility company has to turn on more equipment to meet the peak. This equipment becomes idle when the peak has passed. Therefore, the cost of plant operation can be reduced if the non-essential electricity users (sump pumps, hot water heaters, air conditioners, etc.) are turned off for a few minutes, when a peak is approaching, and are turned back on when it has passed. Peak shedding logic systems are configured by identifying those users that can be periodically turned off for a few minutes, and will not be harmed if their electric energy requirements are satisfied a little later.

LOAD SHEDDING SYSTEMS

Load-shedding devices are the simplest and usually the first method employed in managing energy use and controlling energy costs. They are used to regulate the on and off times of selected electrical loads, such as fans, heaters, and motors in a building, in order to reduce electrical demand (KWD) and regulate energy consumption (KWH). The energy management devices used for this purpose can be electromechanical, electronic, or computer-based digital systems.

All but the most primitive designs monitor the energy consumption of the plant by reading the consumption on the electric utility meter. The operation of one or more loads is interrupted for brief periods when it appears that the electrical demand (KWD) would exceed some preselected limit setting.

The more sophisticated systems also consider such variables as internal and outside ambient temperatures, plant operating level, occupancy in case of buildings, and other predictable factors or events. Control actions can involve regulating the operating parameters of heating, ventilation, and air conditioning (HVAC) equipment, energy storage, and cogeneration systems, as well as turning loads on and off. Utility cost savings can be minimal or dramatic and are largely dependent on the skill and imagination of the user. Table 7.4a provides a summary of the features and capabilities of the different energy management systems on the market.

© 2003 by Béla Lipták

TABLE 7.4a
The Functions and Capabilities of the Various Energy Management Systems

	Mechanical	*Electronic*	*Mini-Computer*
Maximum number of loads	1–6	16–32	64–256
Peak demand limiting	No	Yes	Yes
Time-of-day control	Yes	Yes	Yes
Cycling control	Yes	Yes	Yes
User adjustable	Yes	Yes	Yes
User programmable	No	No	Yes
Remote adjustments	No	Some	Yes
Optimization calculations	No	No	Yes
Printed reports	No	Some	Yes

Peak Shedding System Costs

The cost of procuring and installing energy management devices is dependent on the type of device utilized and the number and complexity of the loads that are selected for control. Simple mechanical time clock devices, serving only a few loads, can be installed for $500 to $1000. Electronic counters and load shedders, capable of controlling about 16 loads, can cost anywhere from $1000 to $10,000, and sometimes more. Fully functional digital energy management systems, including their control programs, can monitor and operate literally hundreds of devices and can cost up to about $25,000. All the devices require ongoing attention and management in order to retain their effectiveness.

Electrical Demand

Electrical demand is defined as the average load connected by a consumer to an electrical power generating system as measured over a short period of time, usually 15 or 30 min. The electrical demand is measured in kilowatts (KWD) and is recorded by the utility meter for each of the measurement periods during the billing period. The highest recorded demand during the billing period is used to determine the cost of each of the kilowatt hours (KWH) consumed. The lower the recorded peak demand, the lower the overall bill. Electrical demand should not be confused with instantaneous load, which is also measured in kilowatts (Figure 7.4b).

Demand Load Shedding

Energy management devices, particularly load shedders, reduce the demand (i.e., average load) during the critical demand periods by interrupting the operation of connected loads for short periods. The result is a reduction in the demand for the critical demand period and a lower utility bill (Figure 7.4c). Equation 7.4(1) below shows the relationship:

$$\text{KWH}/(\text{demand period in hours}) = \text{KWD} \qquad \textbf{7.4(1)}$$

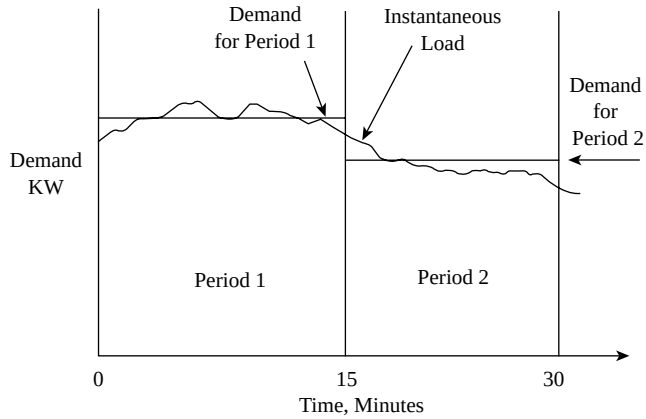

FIG. 7.4b
Relationship between electrical demand and instantaneous load.

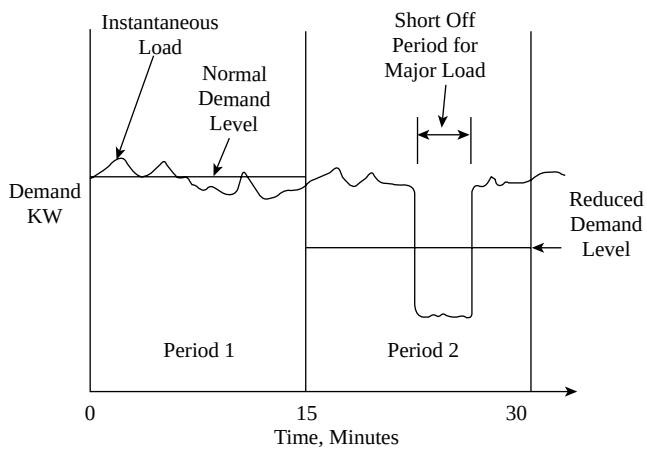

FIG. 7.4c
Effect on demand of cycling a major load off for a brief period.

where

KWH = total energy consumed in the demand period
KWD = the demand in that period

The instantaneous load before the turnoff remains the same. If, without shedding, the current demand period would have produced the highest average load during the billing period, considerable savings will result. In demand periods other than the one having the highest average demand (KWD), energy (KWH) savings will still result. The savings in energy are as important to the user and the environment as the reduction in demand. The availability of inexpensive electronics has made practical some of the more exotic strategies to limit and control energy use. These strategies have less obtrusive effects on plant operation or on building occupants. They can be used to optimize operating times, optimize equipment parameters, select energy sources, and operate cogeneration and thermal storage systems.

© 2003 by Béla Lipták

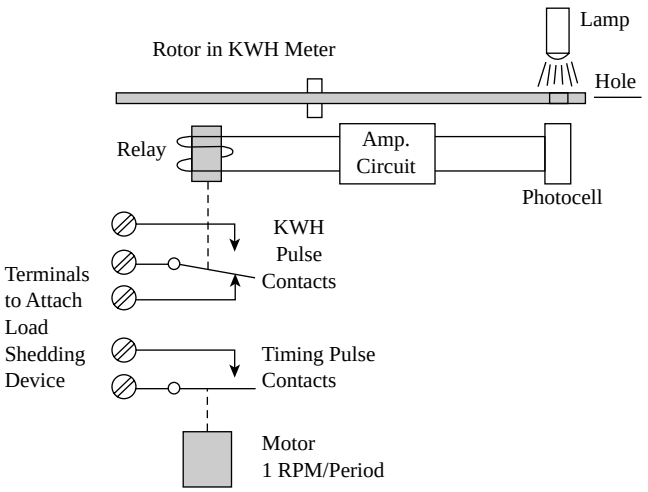

FIG. 7.4d

Electrical connections for meter attachment. The timing pulse contact closes momentarily at the end of each demand period. The KWH pulse transfers once for every rotation of the meter rotor.

Start Signals for Demand Periods

Load-shedding devices and more sophisticated energy management devices base many of their control actions on the projected demand level in each demand period. To define the demand period, they receive two signals from the utility meter. These signals are usually in the form of momentary contact closures of approximately 1/2 s duration, which indicate the start of a demand period or the consumption of a unit of electrical energy (KWH).

Most electrical utilities will provide these signals for a modest fee. Sophisticated control systems are capable of generating their own signals through instrumentation with good results (Figure 7.4d) The energy consumption (KWH) pulse value can be converted to a unit of demand (KWD) by dividing it by the length of the demand period in hours.

(KWH per pulse)/(Demand period in hours) = KWD/pulse **7.4(2)**

SHEDDING CONTROLS

Electromechanical Devices

The least expensive and simplest load-shedding device is the time clock. By means of a small electrical motor and a series of cams and switches, electrical loads can be operated in cyclical mode or turned on and off at preset times. In this mode of operation, no attempt is made to synchronize the time clock with the demand period, and savings are primarily through the lowering of energy consumption (KWH).

Demand (KWD) reductions are achieved by reducing the average load in every demand period and hoping that the period with the highest demand will also be reduced.

Electronic Demand Limiters

A wide variety of electronic demand devices are available at constantly decreasing prices. Electronic circuitry is used to monitor actual demand and to provide control actions to limit the operation of the associated equipment when the demand approaches critical levels. In operation, these devices receive a timing and a consumption pulse from the utility meter. One pulse signals that a unit of energy was consumed, while the other pulse signals the start of a new demand period.

Each demand period can be controlled independently of all others. The timing pulse is used to reset the circuitry. Each energy (KWH) pulse is converted into demand (KWD) and used to increment an electronic counter. As the counts accumulate within a demand period, they are compared (on a second by second basis) to the value that corresponds to the desired demand target. As the accumulated value reaches the target value, control actions are initiated. When the next demand pulse is received, additional actions can be initiated if warranted. When the target is not exceeded by the accumulated count, no action is taken or previous actions are reversed.

This procedure is repeated until all control options have been used or the end of the demand period is reached. The timing pulse resets the counter and restarts the process. Different control strategies can be specified for adjacent demand periods or by time of day or day of week. Loads turned off can be restarted when the demand target is no longer exceeded, when the end of the demand period is reached, or when a preset off time is reached.

Some electronic load shedders are somewhat more sophisticated in that the demand target is not fixed, but increases at a steady rate within the demand period. Comparison of the actual demand and the target is done at regular intervals throughout the demand period. When the difference between the accumulated demand count and the incrementing demand target reaches a set value, loads can be turned "OFF." The load will stay off until the difference decreases to a second value or the period ends. In some electronic load shedders, the turn off and turn on set points can be set independently for individual loads.

Digital Systems

The application of computers to the regulation of energy has made a wide range of control options possible. The computer's memory and high-speed decision-making capability combined with special purpose programs are used to maximize energy and cost savings with a minimum impact on operating conditions and occupant comfort. The computer receives inputs from the electrical meter and the sensors monitoring critical parameters within a plant or building. Loads can be regulated based on demand, time of day and day of week, rate of energy consumption, internal and external temperatures, machinery parameters, energy rates, weather predictions, wind direction and velocity, and combinations of all of these factors and more.

© 2003 by Béla Lipták

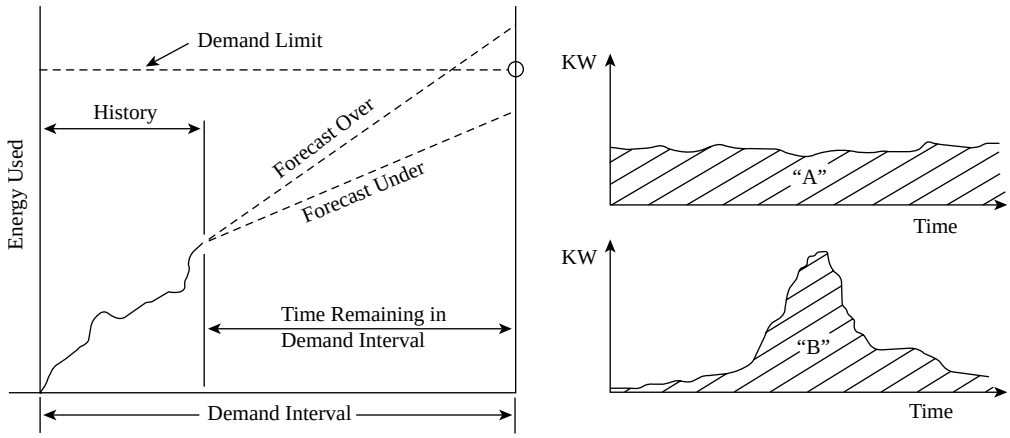

FIG. 7.4e
Electric demand shedding attempts to change electric power use in the plant toward a more uniform rate of usage, which reduces its cost.

The maximum control duration can be adjusted automatically according to these same factors. A second demand target is sometimes used so that if the primary target is exceeded, additional control actions can be taken. Simple demand targets can be made to float according to time of day and other factors forcing control actions. Different operating strategies can be specified for different sections of a plant or building. Multiple plants or buildings can easily be accommodated. Printed reports showing actual consumption by period, day, or month can be provided.

In the area of energy management, computers do much more than simple load shedding and are applied to complex facility management, including optimization of operating times and sets points. Applications include operation of cogeneration and energy storage systems and selection of least-cost energy sources matched to current and anticipated requirements. The computer has provided both the information and the means to make intelligent decisions to obtain maximum energy management.

CONCLUSIONS

If users A and B in Figure 7.4e are using the same total amount of electric energy, user B's bill is going to be higher due to a higher demand charge, which results from the way that total energy was used. B is a more expensive client to serve; the client requires larger generating and distribution equipment, but does not use enough energy to justify operating them all the time.

During each demand period, the total energy use is the basis of a forecast (Figure 7.4e). If the forecast predicts that without correction the plant will exceed its demand limit, electricity users at the top of the shedding list are turned off. If the forecast is that by the end of the demand period the demand limit will not be violated, some of the loads that were previously shed can be automatically restored.

The shedding list includes all electrical devices in the plant that can be turned off for some limited time period. At the top of the list are the low-priority users (sump pumps, HVAC equipment, etc.), while higher up on the list there can be processing equipment that is operated at partial load levels or cycled on and off.

Bibliography

Anderson, R.H., "Understanding What Energy Controllers Do," *Instruments and Control Systems*, January 1976.

Association of Energy Services Professionals International, "Peak Load Management or Demand Response Programs: A Policy Review," Jupiter, FL, August 2001, www.aesp.org.

Briedenbaugh, A., "New York 2001 Load Reduction Programs and 2002 Initiatives," Vermont Public Service Board Workshop: Northeastern Demand Reduction Programs, Price Responsive Load Coalition, October 26, 2001.

Chartwell, *Chartwell Load Management Report*, Chartwell and Xenergy, November 2001 (available from Chartwell, fee).

Cilia, J.P., *A Guide for Building and Facility Automation Systems*, Lilburn, GA: Fairmont Press, 1991.

Edison Electric Institute, "Load Management Benchmarking: 1998 Data" (based on DOE data; free to members), Washington, D.C., 1998, www.eei.org.

Electric Power Research Institute, "Development and Demonstration of Energy Management Control Strategies for Automated Real-Time Pricing" (TR-111365), Palto Alto, CA, October 1998.

"Energy Controls for Small Buildings," *Instruments and Control Systems*, April 1983.

Energy Users News, Vol. 5, No. 33, August 18, 1980.

Gilbert, J., "Making Customer Demand Response a Reality in ERCOT," November 10, 2000, www.puc.state.tx.us.

Hirst, E., "The Financial and Physical Insurance Benefits of Price-Responsive Demand," January 2002, www.ehirst.com.

Hirst, E. and Kirby, B., "Metering, Communications and Computing for Price-Responsive Demand Programs," *Electric Light and Power*, Vol. 78, No. 8, August 2001, 17–18.

Hunt, V.D., *Energy Dictionary*, New York: Van Nostrand Reinhold, 1979.

ISO New England, "Load Response Seminar for Load Servers," April 5, 2001, Holyoke, MA, www.iso-ne.com.

Jennings, B.H., *Environmental Engineering*, Scranton, PA: International Textbook Company, 1970.

Keller, L., "Distributed Generation Aggregation, Dispatch and Control," 3rd Annual International Symposium on Distributed Energy Resources, E Source, San Diego, CA, November 2, 2001.

© 2003 by Béla Lipták

Knaplund, P., "Load Response Program," ISO New England, Holyoke, MA, June 6, 2001.
Long Island Power Authority, "Demand Reduction Programs," Uniondale, NY, September 27, 2001.
Malme, R., "Planning Successful Regional Demand Programs," 2001, RETX, www.retx.com.
Malme, R. and Scarpelli, P., "The Benefits of Load Response Solutions to Manage Transmission Congestion," submitted to the U.S. Department of Energy, The National Transmission Grid Study 2001 (NTGS2001), RETX, Atlanta, GA, September 26, 2001, www.retx.com.
Mashburn, W.A., *Managing Energy Resources in Times of Dynamic Change*, Lilburn, GA: Fairmont Press, 1989.
Mehta, D.P. and Thumann, A., *Handbook of Energy Engineering*, 2nd ed., Lilburn, GA: Fairmont Press, 1991.
META Group, "Energy Management + Price-Responsive Demand = Effective Customer Choice," Trend Teleconference, July 19, 2001.
Nadel, S., "Using Targeted Energy Efficiency Programs to Reduce Peak Electrical Demand and Address Electric System Reliability Problems, American Council for an Energy-Efficient Economy," Washington, D.C., November 2000.
New York ISO, "NYISO Price-Responsive Load Program Evaluation Report: Final Report," prepared by Neenan and Associates, Schenectady, NY, January 8, 2002, www.nyiso.com.
Newton, C., "From DSM to Demand Response," *Electric Perspectives*, November/December 2001.
PJM Interconnection, "PJM Emergency Load Response Program," March 1, 2002, www.pjm.com. 9, 2002.
PJM Interconnection, "Report on the 2001–2002 PJM Customer Load Reduction Program," December 28, 2001, www.pjm.com.
PJM Interconnection, "PJM Proposed Demand Response Program: PJM Day-Ahead and Real Time Demand Response Program Manual," November 26, 2001, www.pjm.com.
Patton, D.B., "An Assessment of Peak Energy Pricing in New England During Summer 2001," ISO New England, November 2001, www. iso-ne.com.
Peak Load Management Alliance, Fall Conference presentations on NYISO, NEISO, CAISO, others, 2001, www.peaklma.com.
Peak Load Management Alliance, Spring Conference presentations by Alexander, Capstone, Allegheny, GPU, AES, CAISO, PJM, Ercot, NEISO, NYISO Hirst, Lenssen, Cherian, James, 2001, www.peaklma.com.
Peak Load Management Alliance, Fall Conference, presentations by Gilbert, Miller, Brown, Violette, Stathis, Joyce, Smith, Anderson, Uhr, Darnell, Rabl and Smith, Gregerson, Puckett, and Scarpelli, October 2000, www.peaklma.com.
Peak Load Management Alliance, Spring Conference, presentations by Barkovich, Dyment, Frandsen, Gilbert, Hall, Leach, LeBlanc, Rabl, Rosenstock, Stizler, Smith, Weaver, and White, June 2000, www.peak-lma.com.
Price Responsive Load Coalition, "Comments of Price Response Load Coalition on Mediator's Report," Federal Energy Regulatory Commission, Docket No. RT01–99, October 8, 2001.
Pita, E.G., *Air Conditioning Principles and Systems*, New York: Prentice-Hall, 1989.
Price Responsive Load Working Group, Meeting Minutes, October 21, 2001.
Read, R., "Energy Program That Works," *Instruments and Control Systems*, June 1978.
RETX, "Taming Price Volatility with the Next Generation of Load Management," www.retx.com.
Ringelstetter, S.L., "New England Peaking Resources Cost," December 10, 2001, Holyoke, MA: ISO New England, www.iso-ne.com.
Roose, R.W., Ed., *Handbook of Energy Conservation in Mechanical Systems in Buildings*, New York: Van Nostrand Reinhold, 1978.
Rosenstock, S., "Benchmarking for Load Management 2001," Edison Electric Institute, Washington, D.C., November 2001.
Rosenstock, S., "Benchmarking for Load Management," Peak Load Management Conference, Edison Electric Institute, Washington, D.C., June 5, 2000.
Rosenstock, S., The Future of Load Management," Edison Electric Institute, Washington, D.C., October 16, 2000.
Rosenstock, S., "Value Propositions for Load Management Programs in a Restructured Electricity Market," Peak Load Management Alliance Conference, Edison Electric Institute, October 1999.
Smith, W.M., "The Next Killer App: Load Management, Only This is for Real," *Public Utilities Fortnightly*, August 2000, pp. 30–36.
Smith, W.M., Gilbert, J., and Meagher, P., "The Ten Commandments of Demand Trading," *Public Utilities Fortnightly*, March 1, 2002, pp. 26–37.
Smith, W.M. and Seiden, K., "The Crystal Ball: Forecasting for Demand Trading," *Public Utilities Fortnightly*, March 1, 2002, pp. 30–33.
Spethmann, D.D., "Electrical Energy Management," *ASHRAE Journal*, July 1981.
Stobaugh, R. and Yergin, D., Eds., *Energy Future*, New York: Random House, 1979.
Thumann, A., *Plant Engineers and Managers Guide to Energy Conservation*, 5th ed., Lilburn, GA: Fairmont Press, 1991.
Uhr, C.W., "Implementing Residential Coincident-Peak Pricing," 12th National Energy Services Conference, Ponte Vedra Beach, FL, December 4, 2001.
Zvolner, S.M., "Conserving Energy through Computerized Building Automation," *InTech*, March 1979.

© 2003 by Béla Lipták

7.5 Excess Flow and Regular Check Valves

D. S. KAYSER (1969, 1982) **B. G. LIPTÁK** (1995, 2003)

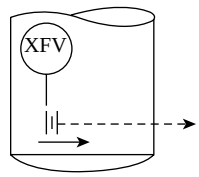

Flow Sheet Symbol

Types:	A. Check valves that prevent flow reversal B. Excess flow check valves that shut off the forward flow in case of high flows caused by pipe rupture
Sizes:	A. From 1 to 72 in. (25 mm to 1.82 m) B. From 0.5 to 10 in. (12 to 250 mm)
Materials of Construction:	Cast iron, bronze, steel, 304 stainless steel, 316 stainless steel, polyvinyl chloride, polypropylene, polyvinylidene fluoride, chlorinated polyvinyl chloride
Costs:	Function of size and materials. A 3 in. (75 mm) excess flow check valve in cast iron or brass costs about $800; in steel, about $2000; and in all stainless steel, about $5000. A gasoline dispenser protector valve costs about $300.
Partial List of Suppliers:	APCO Controls Div., U.S. Para Plate Corp. (www.usparaplate.com) Brooks Instrument (www.brooksinstrument.com) Circle Seal Control (www.circle-seal.com) Fisher Controls International Co. HMI (www.tvsproducts.com) HRL Controls (www.petersoninst.com) Jordan Valve (www.jordanvalve.com) Keystone Valve USA, Inc. (www.labco1.com) Matheson Instruments (www.mathesoninstruments.com) Metal Goods Mfg. (www.mgmvalve.com) Rego Products (www.ecii.com) Tokheim Corp. (www.tokheim.com) TVS Products (www.tvsproducts.com) Valcor Engineering Corp. (www.valcor.com) Val-Matic Valve & Manufacturing Corp. (www.valmatic.com)

INTRODUCTION

Excess flow check valves serve to detect and stop excessive flows from pressurized systems by shutting off the line. These excessive flows can be caused by pipe rupture or by excessive leakage through various devices. The automatic check valve is closed by the pressure drop resulting from the high velocity of outward flow from the pressurized equipment. It is automatically reopened when repairs are made and the flow stops, so that the pressure drop can be eliminated by the slight seepage through the valve.

VALVE DESIGNS

Excess flow valves are normally open, in-line safety devices that act to limit flow of liquids or gases out of a pressurized system. While they will pass normal flow rates, they will close when excessive outward flow rates are reached. This occurs in the event when a pressurized system is opened to atmosphere due to pipe or hose breakage or because of misoperation.

The excess flow valve consists of a plug, a seat, and a spring all housed or supported in a cylindrical tube. The valve may be threaded so that it can be screwed into the pipeline or can be flanged for tank nozzle mounting (Figure 7.5a).

Operation

Under normal operating conditions, the force generated by the flowing process fluid is directed against the valve head and attempts to close it. A spring is provided to work against this force and to keep the valve open. As flow increases above the normal level to an excessive rate, the force against the

© 2003 by Béla Lipták

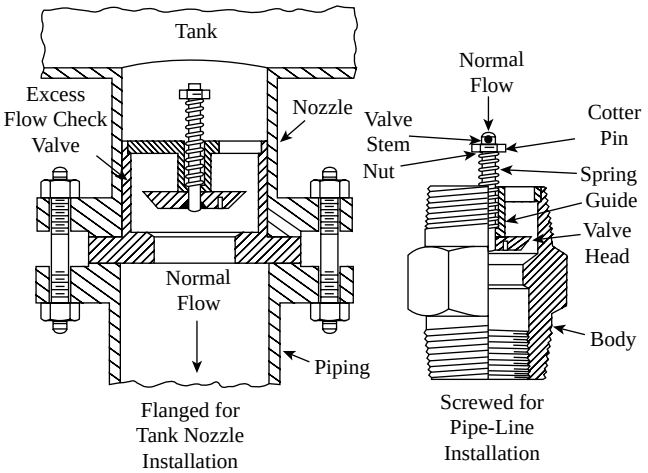

FIG. 7.5a
Excess flow check valves.

plug and the differential pressure (d/p) across it, overcome the spring force and the valve closes.

There are one or more bleed ports around the plug, so that after valve closure the bleed will allow the pressures to equalization up and downstream of the plug, reopening the valve. However, if a pipe break occurs, the d/p across the valve will remain the same as the pressure difference between the pressurized system and the atmosphere, and the valve will stay closed until the pipe is repaired. Because of the required seepage through these valves, which provides them with their equalizing feature, it should be remembered that they will not give tight shutoff.

Applications

One major application of excess flow valves is on large pressurized storage tanks containing liquefied petroleum gas or other dangerous or expensive materials. In such tanks the use of excess flow check valves is recommended by Factory Mutual. For example, liquid propane gas must be stored under relatively high pressures, if it is to be kept in the liquid state. Propane, for one, has a vapor pressure of 192 PSIG at 100°F (1.3 MPa at 37°C).

If a line to or from a propane tank ruptures when the tank contents are at some high storage pressure, a very large amount of propane will quickly escape and will create an extremely hazardous condition. For this reason, it is good practice to install excess flow valves on every piping connection to and from such a storage tank except for the fill and relief lines. The fill line should have a standard check valve (Figure 7.5b), and the pipe leading to the relief line should be unobstructed. For fill line applications special check valves are available from the suppliers listed at the beginning of this section. These check valves allow an unlimited flow in one direction, but very little or none in the other.

Some excess flow valves used for pressurized storage tanks are constructed so that they may be mounted internally

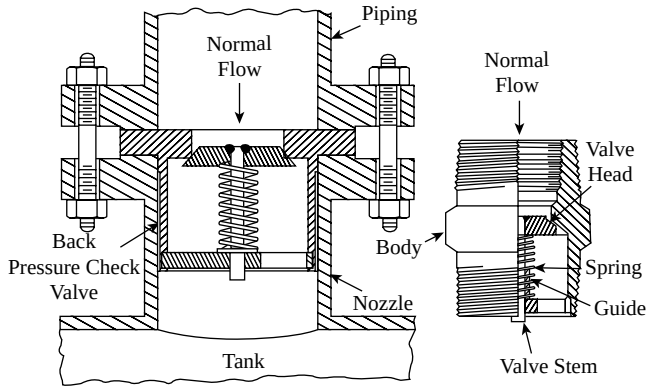

FIG. 7.5b
Flanged and screwed check valves used in full lines.

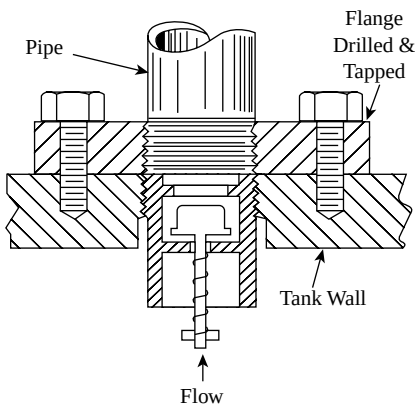

FIG. 7.5c
Excess flow valve installed in tank.

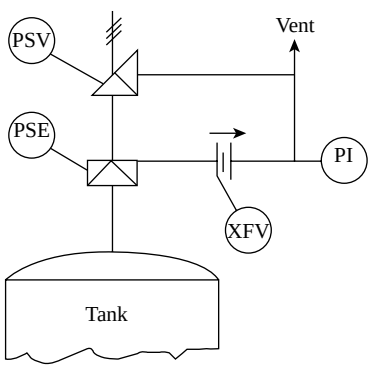

FIG. 7.5d
Excess flow check valve in overpressure protection systems.

to the tank, protecting them from mechanical damage (Figure 7.5c).

Rupture Disc Leakage

A second application for excess flow valves is to bleed off pressures that might build up on top of rupture discs (Figure 7.5d). The installation of such safety devices is

© 2003 by Béla Lipták

recommended by the American Society of Mechanical Engineers code for boilers and pressure vessels.

Rupture discs are differential pressure devices in that the set or burst pressure must appear across the disc before it will rupture. Anytime the downstream side of the rupture disc is sealed away from atmospheric pressure, provision must be made to vent any pressure buildup on the downstream side to atmosphere. Examples of such sealed conditions include when two rupture discs are installed in series or when a relief valve is installed downstream of a rupture disc.

The best way to vent such blocked in spaces is by means of an excess flow valve. The excess flow valve will release small amounts of vapors and release the pressure buildup caused by rupture disc leakage or thermal expansion of the vapors. At the same time, the valve will not pass the large flows that would occur when the disc ruptures.

Gas Station Application

Figure 7.5e illustrates a special-purpose excess flow check valve that is installed underground, below the gas pumps in gas stations. The purpose of this valve is to shut off the gas flow if somebody backs into the gas pump and breaks the pipe on the suction side below the pump. This safety shutoff function is achieved by the pilot valve spring, which keeps the valve closed unless there is a vacuum in the pipeline on the suction side of the pump. Therefore, if the suction pipe is broken (at the internationally preweakened safety shear section), the vacuum is lost and the valve closes. This is particularly important in installations where the gas supply tank is elevated and therefore gasoline could otherwise pour out of it through the broken pipe.

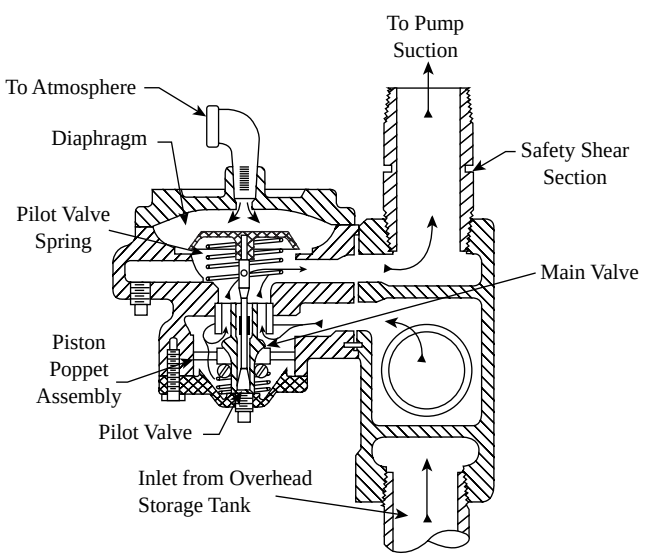

FIG. 7.5e

Excess flow check valve that prevents the flow of gasoline when the pipe to the pump suction is broken and vacuum is lost. (Courtesy of Tokheim Corp.)

Sizing

Since excess flow valves are safety devices, it is important that they be sized, selected, and installed properly. As a general rule for sizing, excess flow valves should be rated to close at about 150 to 200% of normal flow. The 150% figure should be used when the normal flow is well defined, or on installations involving larger valve sizes. In the 150 to 200% sizing range, the valve will be insensitive to surges during start-up and normal operation and will not chatter or restrict the flow. However, it will be sensitive and will close against excess flows caused by pipe breakage.

For proper valve selection, it is important to also specify mounting orientation, flow direction, and the flowing process material, since the valve design is a function of these factors.

Installation

The piping configuration of the installation must guarantee that the excess flow valve represents the greatest resistance to flow of all the restrictions in the downstream pipeline system. The downstream piping should not contain many bends, elbows, and tees. It should also not be reduced in size below the line size of the excess flow valve.

Excess flow valves will not necessarily respond to pipe breakage if it occurs on the discharge side of a downstream pump. This is because the pump will offer considerable resistance to flow even while running. Similarly, excess flow valves will not necessarily respond to partial pipe ruptures.

Testing

One way to check whether an excess flow valve is sized, installed, and functioning properly is to simulate a pipe break downstream of the valve. This is done by opening such a valve to atmosphere that is located away from the excess flow valve at the furthest point in the piping. During such testing, as the valve is opened, product should start to flow out of the system, but it should then stop due to the action of the excess flow valve. This maintenance test should be conducted before start-up and then on a regular schedule at least once a year.

The excess flow check valves must also be protected from foreign materials lodging inside them, which could prevent them from closing. A common cause of excess flow check valve failure is prolonged hammering or tampering with its setting in an attempt to get it to pass more flow than it was designed for.

Bibliography

American Insurance Association, "Fire Prevention Code," Washington, D.C., latest edition.

American Petroleum Institute, "Manual on Installation of Refinery Instruments," API Recommended Practice 550, Washington, D.C., latest edition.

© 2003 by Béla Lipták

Factory Mutual Research Corporation, *Handbook of Industrial Loss Prevention*, New York: McGraw-Hill, latest edition.

Fauske, H.K., "Properly Size Vents for Nonreactive and Reactive Chemicals," *Chemical Engineering Progress*, February 2000, pp. 17–29.

Kletz, T., "What Went Wrong? Case Studies of Process Plant Disasters," Houston, TX: Gulf Publishing, May 2001.

National Board of Fire Underwriters, "Liquefied Petroleum Gases," NBFU No. 58, latest edition.

National Fire Protection Association, "Explosion Venting," NFPA No. 68, Quincy, MA, latest edition.

National Fire Protection Association, "Flammable and Combustible Liquids Code," NFPA No. 30, Quincy, MA, latest edition.

Vervalin, C.H., *Fire Protection Manual*, Houston, TX: Gulf Publishing, latest edition.

Walter, L.F., "Reshaping Process Safety Regulations," *Chemical Engineering Progress*, March 2002.

© 2003 by Béla Lipták

7.6 Explosion Suppression and Deluge Systems

B. BLOCK (1969, 1982) **B. G. LIPTÁK** (1995, 2003)

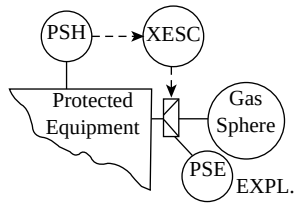

Flow Sheet Symbol

Types:	A. Explosion suppression systems B. Ultra-high-speed deluge systems
Radial Flame Velocities:	Depending on explosive mixtures, from 2 to 80 ft/s (0.6 to 24 m/s)
Suppressant Velocities:	200 to 300 ft/s (60 to 90 m/s)
Time Sequence of Explosion Suppression:	Detection in about 25 ms; suppressant becomes effective in about 50 ms
Response of Ultra-Speed Deluge Systems:	Water applied within 10 to 200 ms of activation. Typical response is 100 ms.
Costs:	From under $5000 for an explosive-actuated rupture disc to up to $100,000 for a complete ultra-high-speed deluge system
Partial List of Suppliers:	Conax Buffalo Technologies (www.conaxbuffalo.com) Fenwall Electronics (www.fenwal.com) Fike Corp. (www.fike.com) Grinnell Corp. (www.grinnell.com) Maxitrol Co. MSA Instrument Div. (www.msanet.com) Tyco (www.tyco-flow.com) Varec Controls Inc. (www.varecbiogas.com)

INTRODUCTION

Explosion suppression and ultra-high-speed deluge systems present an effective approach to combat the hazards of explosion and fire. Traditionally, safety design has stressed two areas of concentration: (1) prevention of explosion when possible, or, if ignition does occur, (2) application of proper measures to reduce the spread of damage. Explosion suppression and ultra-high-speed deluge systems act within milliseconds to extinguish an explosion or fire almost at its inception.

As similar as they may be in their speed of operation, the two techniques are quite different in their application. Each is discussed separately below.

EXPLOSION SUPPRESSION SYSTEMS

Explosion suppression systems are designed to achieve a threefold purpose:

1. To confine and inhibit a primary explosion
2. To prevent a secondary and more serious deflagration or a detonation
3. To keep equipment damage at a minimum

Buildup of pressure is usually kept to within 3 to 5 PSIG (21 to 104 kPa) of normal levels. Under these conditions some damage could be caused to light-walled vessels, but the danger of large-scale damage or fire is minimized.

Explosion suppression systems were developed in England shortly after the Second World War. Their first commercial application began in the mid-1950s. Subsequent installations in the United States date from 1958.

Because chemicals display different explosive characteristics and processes differ in physical dimensions, an explosion suppression system is usually a design package. In many instances, approval for insurance must be obtained from fire underwriters with evidence of design capability demonstrated in a test.

© 2003 by Béla Lipták

Explosions

A flame can be described in terms of its propagation from the source of ignition. There are three categories of flame behavior:

1. Burning—The flame does not spread or diffuse, but remains at an interface where fuel and oxidant are supplied in proper proportions.
2. Deflagration or explosion—The flame front advances through a gaseous mixture at subsonic speeds.
3. Detonation—Advancement of the flame front occurs at supersonic speeds.

Explosion Bomb Test The first task in the development of an explosion suppression system is to establish the propagation characteristics of the material in question. First a sample of the fuel–air mixture that is to be tested is introduced into a cylindrical or spherical vessel. Oxidation is initiated by the application of energy, usually in the form of a spark. The test data are recorded through a pressure–time relationship generated by a pressure cell coupled to a high-speed oscillograph. A typical dust explosion chart is shown in Figure 7.6a.

The pressure within a spherical vessel after the ignition of a quiescent fuel–air mixture can be predicted by the equation:

$$p = KS_r^3 t^3 P/V \qquad \textbf{7.6(1)}$$

where

K = is a characteristic of the system
S_r = radial flame speed
t = time
P = maximum pressure that would be reached within a closed container (also a function of the system but not dependent on the volume of the container)
V = volume of the vessel

S_r in this equation is the radial flame speed and not the normal combustion velocity. They are related by the equation:

$$S_r = S_n(T_f/T_j)(\overline{M}_i/\overline{M}_f) \qquad \textbf{7.6(2)}$$

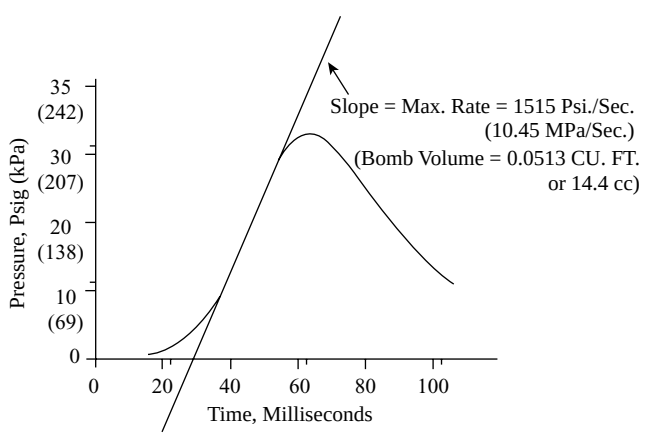

FIG. 7.6a
Typical explosion bomb test.

TABLE 7.6b
Radial Flame Velocities of Explosive Mixtures

Fuel	*Oxidant*	*Typical Material*	*Radial Flame Vel. (S_r) ft/s (m/s)*
Organic dust	Air	Flour, starch	2–5 (0.6–1.5)
Organic vapor	Air	Propane, hexane	9–12 (2.7–3.6)
Hydrogen	Air		30 (9)
Organic vapor	Oxygen		80 (24)

where S_n is the normal combustion velocity and the multipliers are the ratios of the initial and final (before and after combustion) absolute temperatures and average molecular weights. The difference in velocity is quite significant, since S_r will normally be on the order of 10 times S_n. Radial flame speeds for some materials are given in Table 7.6b.

For the purposes of explosion suppression, it is more convenient to rearrange Equation 7.6(1):

$$t = S_r(pV/KP)^{1/3} \qquad \textbf{7.6(3)}$$

To be effective, maximum pressure, P, must be held to 2 to 4 PSIG (13.8 to 27.6 kPa). For a given substance, S_r, K, and P can also be considered constant, which leads to the simplified form:

$$t = CV^{1/3} \qquad \textbf{7.6(4)}$$

Design of actual systems is based on producing explosions within test chambers to determine the parameters characteristic of the system. The information is then adjusted to the size of the real equipment by means of Equation 7.6(4). The corrective action should take less time than the tile required for the explosion to develop the limiting maximum pressure. For example, the explosion test illustrated in Figure 7.6a was performed in a small bomb with a volume of 0.0513 ft^3 (11.4 cm^3). The data from the early part of this test were then used to predict the normal curve for a vessel of 3.38 ft (946 cm^3) volume by using Equation 7.6(4):

$$t_1 = t_s(3.38/0.513)^{1/3} = 1.876t_s \qquad \textbf{7.6(5)}$$

The translated data were then made the basis for the test illustrated in Figure 7.6c.

How Suppression Works

The operation of an explosion suppression system is a race with time. On one hand, there is the physically determined buildup in pressure due to the explosion. The counterplay is detection of the explosion, application of suppressants to extinguish the deflagration, and corrective action to limit the extent of damage. Operation of a typical system is illustrated in Figure 7.6c. The basic relationships that make a process like this practical are:

1. The explosion can be detected early in the process. The pressure front advances at the speed of sound

© 2003 by Béla Lipták

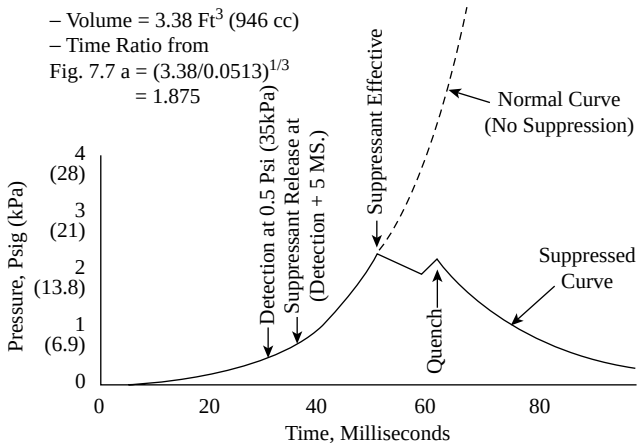

FIG. 7.6c
Explosion suppression sequence.

(on the order of 1100 ft/s, or 330 m/s) while the flame front propagates at about 10 ft/s (3 m/s).

2. The impulse received at a detecting device can be transmitted to the suppressant container at basically the speed of an electrical impulse.
3. Release of the suppressant is promoted by the explosive opening of a suppressant bottle or a high-speed hydraulically balanced system. The time period required for the triggering explosion to take effect is designed to be much less than the one in the vessel. The fill volume of the corrective explosive is kept very small.
4. The suppressant, ejected from several sources, is propelled into the explosive zone at a velocity of 200 to 300 ft/s (60 to 90 m/s).
5. The course of events from initiation of the explosion to its complete extinction can be of very short duration. The specific time depends upon the characteristic of the material and the geometry of the system. Quench time of the explosion illustrated in Figure 7.6c was 60 ms.

Explosion Characteristics Considerable work has been done in measuring explosion characteristics. Typically reported values are average and maximum rate of pressure rise and maximum pressure produced by the explosion. Some of this information is presented in Table 7.6d.The list of materials investigated by the U.S. Bureau of Mines has been extensive. Reports RI 5753 and 5971 provide a tabulation of its results. A note of caution must be injected relating to explosion data of the type given in the table. Starting pressure of the explosion test was atmospheric. Significant correction must be made if the normal pressure before ignition is above 14.7 PSIA (101 kPa), especially in the case of gases and vapors.

As can be seen in Figure 7.6c, the initiation of explosion suppression is delayed because of the low rate of pressure rise during the initial phase of the process. Information on maximum rates of rise is of value, however, when comparing the explosion characteristics of different materials.

TABLE 7.6d
Explosion Characteristics of Various Materials

Material	*Maximum Pressure PSIG**	*Rate of Rise, PSI/s*	
		Maximum	*Average*
I. Vapors and Gases			
Acetaldehyde	94	2100	1900
Acetone	83	2000	1200
Acetylene	150	12000	8800
Acrylonitrile	109	2800	2600
Butane	97	2300	1700
Benzene	97	2300	1600
Butyl alcohol	104	2700	1600
Ethyl alcohol	99	2300	1550
Hydrogen	101	11000	10000
Methyl alcohol	99	3030	1500
Cyclohexane	99	3030	1500
Ethane	104	2200	2000
Ethylene	98	2500	2100
Hexane	119	8500	6600
Propane	92	2500	1500
Toluene	96	2500	1700
	92	2400	920
II. Agricultural Dusts			
Alfalfa meal	61	800	350
Cloverseed	76	1000	450
Coffee, instant spray dried	68	500	200
Corn, dust	95	6000	1700
Cornstarch, fine	145	9500	2900
Soy flour	104	1500	800
Sugar, powdered	91	5000	1700
Wheat flour	97	2800	900
III. Plastic Dusts			
Cellulose acetate	108	6500	2200
Methyl methacrylate	101	1800	450
Nylon	95	3600	2200
Phenol furfural	88	8500	20000
Phenol formaldehyde	83	3600	2600
Polycarbonate	78	4700	1600
Polyethylene	82	2300	1100
Polypropylene	76	5000	1500
Polystyrene	77	5000	1500
Polyurethane	88	3700	1400
Rayon	88	1700	800
Urea formaldehyde	89	3600	1300

*1 PSIG = 6.9 kPa.

Suppressant Chemicals

Effective explosion suppression requires getting sufficient amounts of chemical to the trouble area in very short time, adapting required dispersing equipment to withstand the environment, and immunizing the system to outside influences

© 2003 by Béla Lipták

TABLE 7.6e
Compounds Used as Explosion Suppressants

Agent	Chemical Formula	Relative Effectiveness % by wt. (CCl_4 = 100)	UL Relative Toxicity 1 = highest 6 = lowest
Chlorobromethane	CH_2BrCl	180	3
Bromodifluoromethane	$CHBrF_2$	161	
Bromotrifluoromethane	$CBrF_3$	195	6
Dibromodifluoromethane	CBr_2F_2	201	4
Carbon dioxide	CO_2	95	5
Water	H_2O	72	
Carbon tetrachloride	CCl_4	100	3

(e.g., temperature of the vessel or its surroundings). The suppressant must also be compatible with the other chemicals in the system.

In general, an explosion is considered to be an oxidation reaction. Water and carbon dioxide, two popular materials for extinguishing fires in normal usage, are not generally utilized for explosions. Aside from a possible reactivity with the chemicals in question, relatively large quantities of water would be necessary to limit reactions. Carbon dioxide has a low effectiveness–weight ratio and would require large storage units. Materials have also been known to reignite after having been extinguished by CO_2.

Halogenated compounds, mostly methane derivatives, are popular suppressants. Table 7.6e lists the properties of some of these agents.

Chlorobromomethane and bromotrifluoromethane are most commonly used. While water owes its effectiveness to a cooling action and CO_2 relies upon its ability to exclude oxygen from the fire, the halogenated compounds seem to have a chemically inhibitive effect on the combustion reaction. Therefore, a chemical such as bromotrifluoromethane can be effective in extinguishing fires where oxidizing agents are present. Certain of the halogenated chemicals are also very low in residue so that subsequent interruption for cleaning can sometimes be held to a minimum.

EXPLOSION SUPPRESSION HARDWARE

The hardware for explosion suppression falls into three categories:

1. Detectors, which serve to discern the initiation of the explosion
2. Control units, which initiate the corrective action in one or several directions
3. The actuated devices, which blanket the protected area with the suppressant

The adjacent areas are vented or isolated as required.

Detectors Any physical characteristic that will give evidence of an explosion in its early stages can be detected. Absolute values or rate of pressure or temperature rise have been used in addition to the detection of infrared (IR) and ultraviolet (UV) radiation levels. The characteristics of each of these measurements are discussed below.

Temperature Measurement is accomplished with a thermocouple that has a very low mass exposed hot junction. Even so, temperature is a slowly changing physical characteristic. It would only be suitable under unusual circumstances or when other detection methods cannot be used.

Infrared Radiation Detection by IR radiation is extremely fast and sensitive. On the other hand, there are some factors that must be allowed for when designing a system with these detectors. Since they are a line-of-sight system, they must be placed where they see all of the locations where an explosion might develop. Usually multiple detectors can be used with overlapping coverage. In dusty atmospheres, precautions must be taken to assure that the lens opening is kept clean. The circuit design must incorporate a screening device to guard against false actuation by spurious IR sources. To improve discrimination, a system of filters is often utilized and an adjustable threshold sensitivity is included.

Ultraviolet Radiation Uv detectors are used alternately to IR units. They are alike in their extreme speed of detection and in the design requirements typical of line-of-sight units.

Pressure The most universally applied detectors are those relying on pressure. Activation in these devices is by means of a diaphragm and switch combination that is fast acting and has low inertial mass. The generally preferred form is by absolute pressure. Detectors for equipment that is normally at atmospheric pressure can be activated at 0.5 PSIG (3.5 kPa) or less.

© 2003 by Béla Lipták

Where pressure fluctuations are expected, or where the normal operating pressure is above atmospheric, a pressure rate-of-rise unit is required. Activation in this case is initiated by pressure drop across an orifice in excess of a preset minimum. Although pressure-activated devices do not respond as quickly as radiation detectors, they are suitable for a broader range of atmospheres.

Control Units

The basic function of the control unit is to convert the weak signal generated by the detector into a form of energy sufficient to operate extinguishing and alarm devices. In the course of assuring system reliability, more than just the one duty is provided. The central control unit must:

1. Operate devices based on the actuating signal from a detector
2. Monitor the suppression system for ground faults that might interfere with proper operation
3. Contain internal and automatic battery backup units that are activated in case of power failure
4. Monitor the shutdown of specific pieces of equipment and give local and remote alarm
5. Provide a test circuit so that operation of the system components can be checked nondestructively
6. Continually supervise integrity of all external circuitry

Actuated Devices

Actuated devices produce a condition that limits the damage caused by the explosion. The most important of these are the suppressors and extinguishers. Additionally, there may be preaction vents, isolation valves, and other corrective measures initiated by detection of an explosion.

Suppressors and Extinguishers The distinction between suppressors and extinguishers is basically in the method of mounting and the mechanism of release of the suppressant. Suppressors are mounted internally to the equipment being protected. They contain a relatively small volume (to 5000 cm^3) and are actuated by detonation of an explosive charge within the container. These units are mounted close to possible sources of ignition and provide a fast source of extinguishing chemicals. Figure 7.6f illustrates a hemispherical suppressor unit.

Extinguishers are much larger in volume, up to 30 l (about 7 1/2 gal), and are mounted outside of the equipment on a boss or flange. They are usually pressurized with nitrogen to 300 PSIG (2070 kPa) and are fitted with a diaphragm that is opened by an explosive charge. These units are used where more suppressant is required than would be available from the small suppressor unit, such as in large ducts and bag filters. They have an additional advantage in that they can be fitted with a new closure and refilled for reuse (Figure 7.6g).

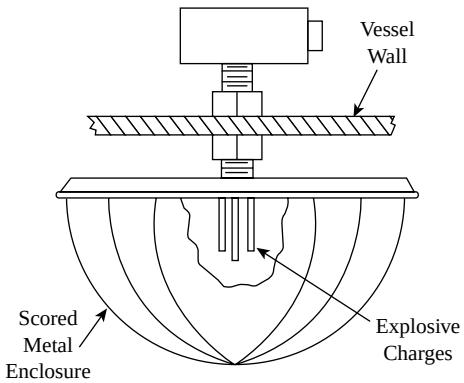

FIG. 7.6f
Hemispherical suppressor unit.

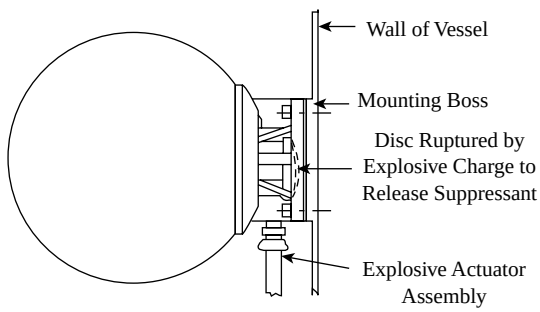

FIG. 7.6g
Spherical extinguisher.

Explosive-Actuated Rupture Discs If an explosion occurs in a pressure vessel, the pressure in the vessel will build up to a point where it causes the rupture disc to blow. These conventional rupture discs, which are used in applications where slow pressure buildup is expected, are discussed in Section 7.17. Due to the high speed at which the pressure rises during an explosion and to the relatively long time needed to stretch a disc until it ruptures, the standard discs are too slow to protect the equipment against explosions.

Detonator actuated deluge discs have been developed to reduce the time needed to rupture the disc (Figure 7.6h). These discs do not rupture due to the pressure forces alone, but use a pressure switch that senses the process overpressure and ignites an explosive charge when it is reached. The main advantage of such a system is in its speed of response. Its main disadvantage is that it is not self-contained, but depends on the proper operation of some outside components and of a reliable power supply.

It is sometimes advantageous to protect some equipment with explosive-actuated rupture discs. In these units, a self-contained explosive charge is used to rupture the disc when an explosion is detected. In this way, the vent is completely open before the pressure wave reaches it and the maximum possible pressure buildup is reduced (Figure 7.6i).

© 2003 by Béla Lipták

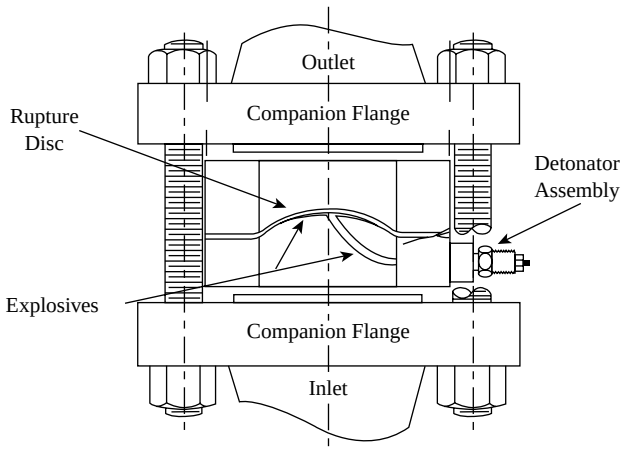

FIG. 7.6h
Detonator actuated deluge disc. (Courtesy of Fike Metal Products.)

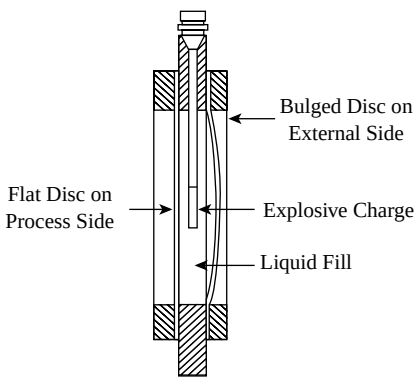

FIG. 7.6i
Explosive-actuated rupture disc.

Other Auxiliary Units Explosion detectors can also actuate other devices. They can be used to open various fast-acting valves and dampers or can activate sprinkler systems by the opening of deluge valves. Pumps, blowers, agitators, and other process equipment can also be interlocked into the system.

Applications

Explosion suppression is used for the protection of extremely hazardous systems in industry. The technique is primarily applied to bins, hoppers, reactors, air conveying systems, bag filters, and other closed arrangements. A particularly well-suited application is the protection of hammer mills and other grinding equipment where the elements of severe explosion are present in the form of well-mixed dust, air, and tramp metal.

There are cases where explosion suppression will not work. Decomposition usually cannot be halted because suppressant chemicals will not stop the reaction. Explosions that develop very high radial flame speeds (such as hydrogen-oxygen) are too fast for existing equipment. Many detonations (ultrasonic) also develop from an initial deflagration. It is possible to arrest the flame if detection and extinguishment can be affected before the detonation develops, but there is no means of dealing with detonation once it has developed.

The key word in system design and application is reliability. Having a unit that is certain to work when it is needed justifies thorough investigation of the physical aspects of each case and the chemical nature of the ingredients. Reliability is assured by using devices that are known to be trouble-free, and by duplicating them. A given installation may have two or more detectors and several suppressors. Frequently, different types are installed in parallel.

ULTRA-HIGH-SPEED DELUGE SYSTEMS

Although ultra-high-speed deluge (UHSD) bears a good deal of similarity to explosion suppression, the unique characteristics of this system require separate study. The two methods resemble each other in the use of certain devices and in the time period in which they must function. But they differ in where they are applied and how they work.

UHSD was developed for extinguishing fires at their inception. Its point of application is generally an open area or room instead of a vessel or container. Where the room is a space capsule or hypobaric chamber, this distinction narrows. Fire in solid rocket fuel processing plant can lead to an explosion unless, with the application of a UHSD system, it is extinguished promptly.

The suppressant for UHSD is almost always water.

Detectors

Since UHSD is applied in open areas and detection must take place within a very short time interval, detection devices that depend on pressure or temperature change are of little value. For UHSD, the speed and sensitivity advantages of UV and IR detectors have been used successfully.

Control Units

The function of the control unit is basically similar to those described under "Explosion Suppression." In some cases a cycle timer is also included as a part of the package. After a set time of operation, the water is turned off and the detector is reinterrogated. If the alarm condition still exists, the deluge system reactivates for the set period. This feature is desirable to prevent flooding by the large quantities of water released.

Actuated Devices

Deluge systems must apply a lot of water on the source of ignition within a very short time. Density requirements for normal high-hazard applications (Class I, Group D) may

© 2003 by Béla Lipták

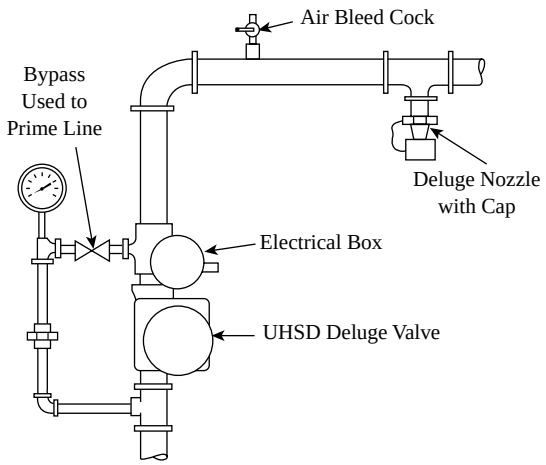

FIG. 7.6j
UHSD system with high-speed deluge valve.

run 0.3 gal/min/ft^2 (12.2 l/min/m^2); in the case of these special hazards, the requirement is frequently 7.5 gal/min/ft^2 (305 l/min/m^2). A plentiful source of water at sufficient pressure is required with the lines sized for low pressure drop. Available head is a significant factor in the speed of response since the water delivery time is proportional to the square root of the supply pressure.

There are two basic deluge system designs: the high-speed deluge valve and the pressure-balanced nozzle. Both of them depend upon a completely air-free, primed piping system to ensure fast action. Tests conducted by one firm have shown that an air pocket amounting to 5% of the total volume will double the operating time.

High-Speed Deluge Valve System An explosive-actuated deluge valve is used to initiate flow. In order to prime the system, a bypass is provided around the valve and the nozzles are sealed with a protective cap. The cap is forced off by pressure in the nozzle when the system is activated. Figure 7.6j illustrates typical piping, and operation of the deluge valve is shown in Figure 7.6k.

Pressure-Balanced Nozzle System The pressures of the main water line and a pilot line are balanced at the nozzle to keep it closed. The pilot line takes off from the main riser through an orifice. Bleed cocks are provided to prime both lines. Upon activation of the system, one or more solenoid valves vent the pilot line. Pressure in the main riser opens the nozzle to cause flow. Figures 7.6l and 7.6m show a typical system and internal construction of the nozzle.

Applications

UHSD systems are used in special hazard locations such as hypo- and hyper-baric chambers, munitions plants, munitions stores on board ships, and rocket fuel processing plants. One application of these systems involves protection of a lathe operation where solid rocket propellant is machined.

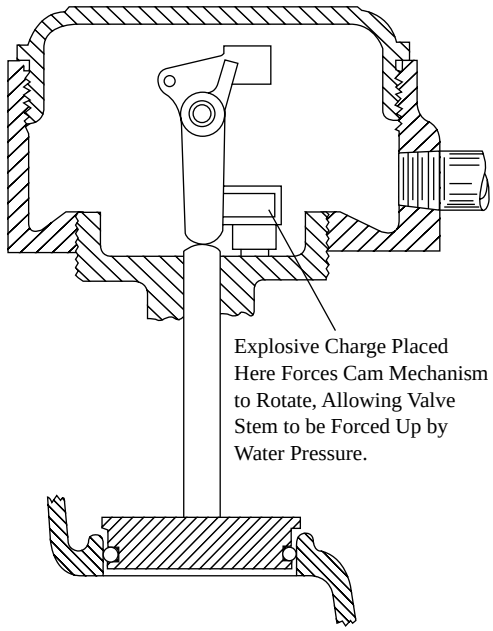

FIG. 7.6k
UHSD deluge valve.

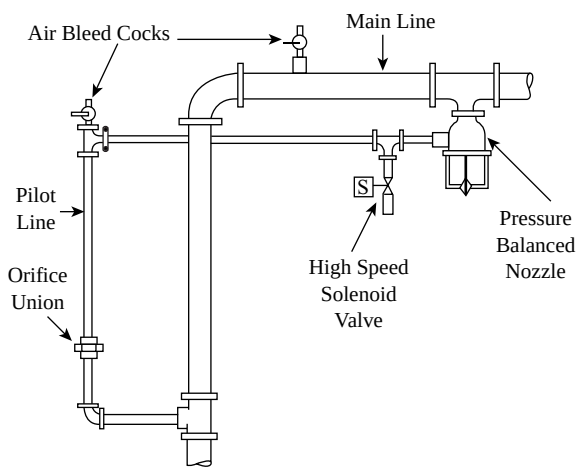

FIG. 7.6l
UHSD system with pressure-balanced nozzle.

A typical deluge system specification used for the protection of an oxygen-rich operating chamber might contain the following requirements:

1. The system must activate within 200 milliseconds of ignition.
2. There must be a discharge at a rate of 7.5 gal/min/ft^2 (305 l/min/m^2) of chamber floor area.
3. There must be a stabilization of water flow within half a second.
4. The system must shut down in 20 s and must be reset within 5 s.
5. Recycling must be conducted as needed.

© 2003 by Béla Lipták

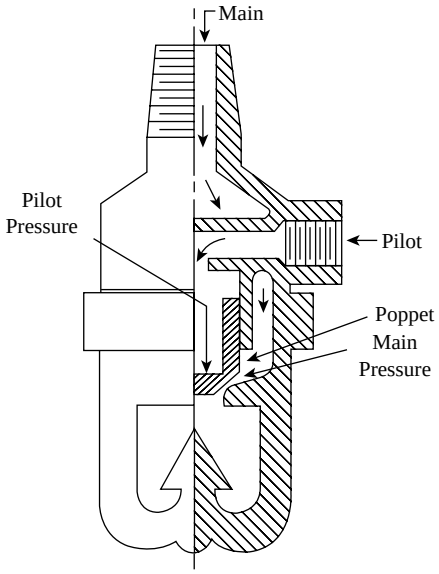

FIG. 7.6m
Pressure-balanced nozzle.

Operating time for UHSD depends greatly upon the system size and configuration. Water is generally applied within 15 to 200 ms, with 90 ms being an average for most applications.

Bibliography

American Insurance Association, "Fire Prevention Code," Washington, D.C., latest edition.

American Petroleum Institute, "Manual on Installation of Refinery Instruments," API Recommended Practice 550, Washington, D.C., latest edition.

Bryan, J.L., *Fire Suppression and Detection Systems*, 3rd ed., New York: Macmillan, 1993.

Bryan, J.L., *Automatic Sprinkler and Standpipe Systems*, 3rd ed., Quincy, MA: National Fire Protection Association, 1997.

Bryan, J.L., "Behavioral Response to Fire and Smoke," *The SFPE Handbook of Fire Protection Engineering*, 2nd ed., Quincy, MA: National Fire Protection Association, 1995, chaps. 3–12.

Bryan, J.L., "Human Behavior and Fire," *NFPA Fire Protection Handbook*, 18th ed., Quincy, MA: National Fire Protection Association, 1997, sect. 8–1.

Factory Insurance Association, "Recommended Good Practice for Safeguarding Flammable Liquids," Hartford, CT, 1958.

Factory Mutual System, *Handbook of Industrial Loss Prevention*, New York: McGraw-Hill, latest edition.

Gagnon, R.M., *Design of Water-Based Fire Protection Systems*, Albany, NY: Delmar Publishers, 1997.

Gagnon, R.M., *Design of Special Hazard and Fire Alarm Systems*, Albany, NY: Delmar Publishers, 1998.

Gagnon, R.M., "Ultra-High-Speed Suppression Systems for Explosive Hazards," *NFPA Fire Protection Handbook*, 18th ed., Quincy, MA: National Fire Protection Association, 1997, sect 6–14.

Karlsson, B. and Quintiere, J.G., *Enclosure Fire Dynamics*, Boca Raton, FL: CRC Press, 1999.

Klote, J.H. and Milke, J.A., *Design of Smoke Management Systems*, Atlanta, GA: American Society of Heating, Refrigerating and Air-Conditioning Engineers, 1992.

Milke, J.A., "Analytical Methods for Determining Fire Resistance of Steel Members," *The SFPE Handbook of Fire Protection Engineering*, 2nd ed., Quincy, MA: National Fire Protection Association, 1995, chaps. 4–9.

Milke, J.A., "Smoke Management in Covered Malls and Atria," *The SFPE Handbook of Fire Protection Engineering*, 2nd ed., Quincy, MA: National Fire Protection Association, 1995, chaps. 4–13.

Mowrer, F.W., "Integration of Fire Models with the Design Process," *NFPA Fire Protection Handbook*, 18th ed., Quincy, MA: National Fire Protection Association, 1997, sect. 11–13.

National Board of Fire Underwriters, "Liquefied Petroleum Gases," NBFU No. 58, latest edition.

National Fire Protection Association, "Explosion Venting," NFPA No. 68, Quincy, MA, latest edition.

National Fire Protection Association, "Fire Facts," Quincy, MA, 1982.

National Fire Protection Association, "Flammable and Combustible Liquids Code," NFPA No. 30, Quincy, MA, latest edition.

National Fire Protection Association, "Guide for Explosion Venting," tables of data by Crouch, H.W., Chapman, C.H., Raymond, C.L., and Wischmeyer, F.W., pp. 36–41, 1954.

Quintiere, J.G., "Principles of Fire Behavior," Albany, NY: Delmar Publishers, 1998.

Quintiere, J.G., "Surface Flame Spread," *The SFPE Handbook of Fire Protection Engineering*, 2nd ed., Quincy, MA: National Fire Protection Association, 1995, chaps. 2–14.

Quintiere, J.G., "Compartment Fire Modeling," *The SFPE Handbook of Fire Protection Engineering*, 2nd ed., Quincy, MA: National Fire Protection Association, 1995, chaps. 3–5.

Rockett, J.A. and Milke, J.A., "Conduction of Heat in Solids," The SFPE Handbook of Fire Protection Engineering, 2nd ed., Quincy, MA: National Fire Protection Association, 1995, chaps. 1–2.

"Safety Consideration in Chemical Plant Shutdown Systems," Panel #99, 1991 Instrumentation, Systems, and Automation Society Conference, Anaheim, CA, October 1991.

Vervalin, C.H., *Fire Protection Manual*, Houston, TX: Gulf Publishing, latest edition.

© 2003 by Béla Lipták

7.7 Flame Arresters, Conservation Vents, and Emergency Vents

D. S. KAYSER (1969, 1982) **B. G. LIPTÁK** (1995, 2003)

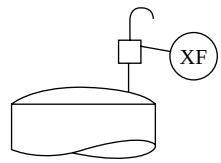

Flame Arrester

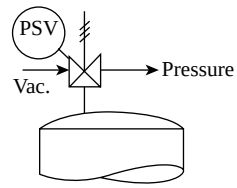

Conservation Vent

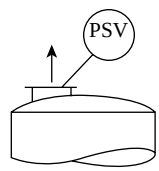

Emergency Vent

Flow Sheet Symbols

Types:	A. Flame Arresters B. Conservation Vents B1. Pressure relief only B2. Breather valves for pressure and vacuum relief B3. Vacuum vents C. Emergency vents and manhole covers D. Gauge hatches
Materials of Construction:	A. Cast aluminum, cast iron, cast steel, 304 or 316 stainless steel bodies; aluminum or stainless steel pellets or tube banks; also available with heresite and other coatings B. Bodies are available in low-copper aluminum, cast iron, steel, 304 or 316 stainless steel. Seats can be molded thermosetting phenolic, aluminum, or 316 stainless steel. Diaphragms are available in FEP Teflon.
Sizes:	A. Standard units from 1 to 12 in. (25 to 300 mm), special units up to 30 in. (762 mm.) B. 2 to 12 in. (50 to 300 mm) C. 10 to 24 in. (250 to 600 mm) D. 4 to 8 in. (100 to 200 mm)
Connections:	A. Screwed or 150# ANSI flanges B, C, D. 125# and 150# ANSI or API flanges
Pressure Settings:	B. Standard pressure and vacuum settings are 0.5 oz/in.^{2} (0.865 in., or 22 mm, of H_2O); maximum pressure and vacuum settings are 24 and 5 oz/in.^{2} (10 and 2 kPa), respectively C, D. Standard setting is 1.0 oz/in.^{2} (about 2 in., or 50 mm, of H_2O)
Operating Temperatures:	B. –50 to 300°F (–50 to 149°C)

© 2003 by Béla Lipták

Costs:

A. For the 1 to 8 in. (25 to 200 mm) size range in aluminum construction, the price range is $150 to $1700
B. For the 2 to 10 in. size range (50 to 250 mm), the cost of aluminum units ranges from $300 to $1200
C. For the 16 to 24 in. (400 to 600 mm) size range, the cost of aluminum units ranges from $500 to $1200

Partial List of Suppliers:

Acetank Equipment (www.acetank.com)
Advanced Catalyst Systems (www.advancedcatalyst.com)
Anderson Greenwood (www.andersongreenwood.com)
BS&B Safety Systems (www.bsbsystems.com)
Cross Instrumentation (www.crossinstrumentation.com)
Enardo (www.enardo.com)
Forgy Process Instruments (www.forgyprocess.com)
Knitmesh Ltd. (www.knitmesh.com)
G. W. Lisk Co. (www.gwlisk.com)
Morrison Bros. (www.morrison_emergency.com)
Parker Yamaha (www.parkeryamaha.com)
Protectoseal Co. (www.protectoseal.com)
Shand & Jurs, Fluid Equipment (www.fluidequipment.com)

INTRODUCTION

Tanks and vessels must be protected against rupture due to overpressure or against collapse caused by vacuum. They also need protection from the propagation of flame through the venting system, which could cause fire and/or explosion, if some exterior source caused ignition. In addition, the storage tanks containing flammable liquids or solvents should be allowed to breathe, but should also be protected against costly evaporation losses.

The various breather valve designs (conservation and emergency vents or vacuum breakers) protect the tanks from being exposed to excessive pressures or vacuums during filling or discharging. The purpose of the flame arresters is to cool the vapors below their ignition points as they pass through them. These devices are often used in combination with conservation vents where the flame arrester is placed under the conservation vent and they work as a unit.

The airflow capacities of different size flame arrestors in combination with conservation vents can be determined from Figure 7.7a for units from 2 and 12 in. pipe sizes. The data in these charts provide the capacities for breather valve pressure or vacuum settings from 0.1 to 100 in. for both pressurized and evacuated storage tank applications.

TYPES OF VENTS

The venting requirement is a function of tank design. Several tank constructions have been developed to eliminate or reduce the requirement for reliance on breather or vent equipment. Among these are various floating or lifting roof designs, and diaphragms that have sufficient expansion capacity to take up volume changes that are caused by liquid transfer and thermal expansion. It should be noted that some of these tank constructions are safer and better able to conserve vapors than the standard cone roof tank. This is true even when the cone roof tank is properly vented using breather valves, emergency vents, and flame arrestors. However, there are many applications where the cone roof design is used. This section covers vent sizing and application for those tanks.

Tank breathing capacity should be large enough to match the volume changes due to filling, emptying, and/or thermal expansion. Three kinds of vents are utilized to meet the various venting requirements. The first is the simple free vent breather. This is an open pipe with its outlet screened and usually pointing down to prevent rain and debris from getting into the tank.

Conservation Vents

The second type of vent used is the conservation vent or breather valve. This valve is a low-pressure relief device and vacuum breaker valve, combined in a single housing. Operation of the conservation vent is illustrated in Figure 7.7b. As the pressure builds up in the tank, there is a differential created across the pressure relief pallet. When this differential becomes large enough to lift the pallet, this inner valve lifts and allows the vapors to flow out of the tank. Similarly, when a vacuum is developed inside the tank because of the discharge of liquids, the differential across the inner valve of the vacuum braking valve becomes large enough to lift the vacuum pallet and allows air to flow into the tank.

All large storage tanks are exposed to small changes in internal pressure resulting from (1) vacuums due to liquid thermal contraction or pump-out, and (2) pressures due to liquid thermal expansion or pump-in. These changes are usually small (on the order of inches of water column), but because they act on the large internal area of the tank, their effect can be great. For example, a positive pressure of slightly over 3 in. of water column is enough to rupture the roof to side weld seam on many vertical tanks with cone roofs. Similarly, a small negative pressure over the large wall area may be enough to cause the walls to collapse. It is therefore necessary

© 2003 by Béla Lipták

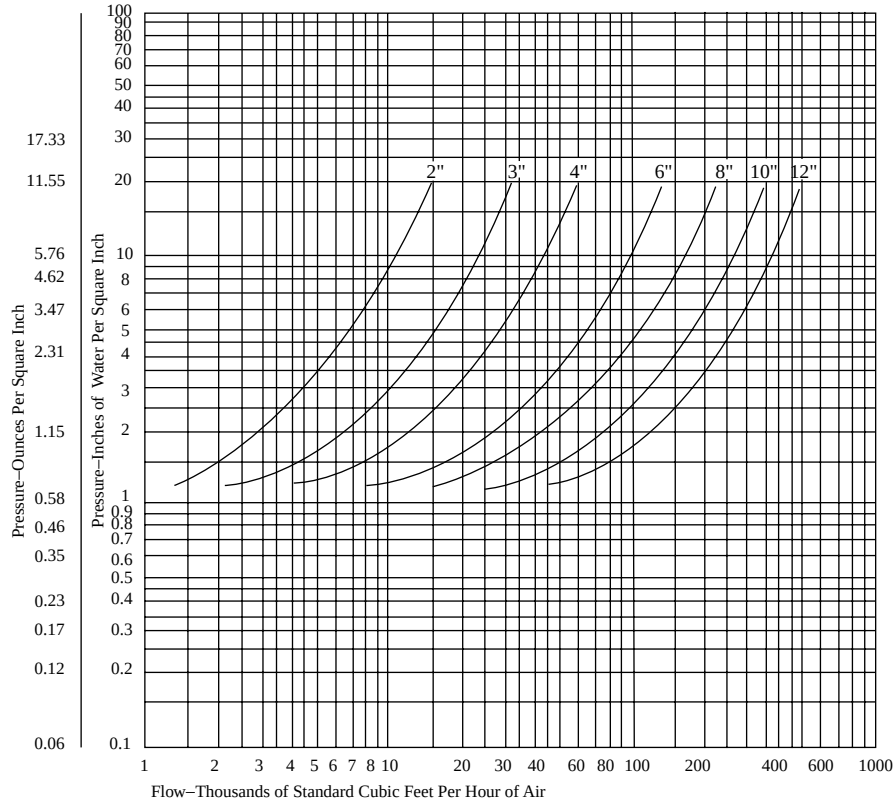

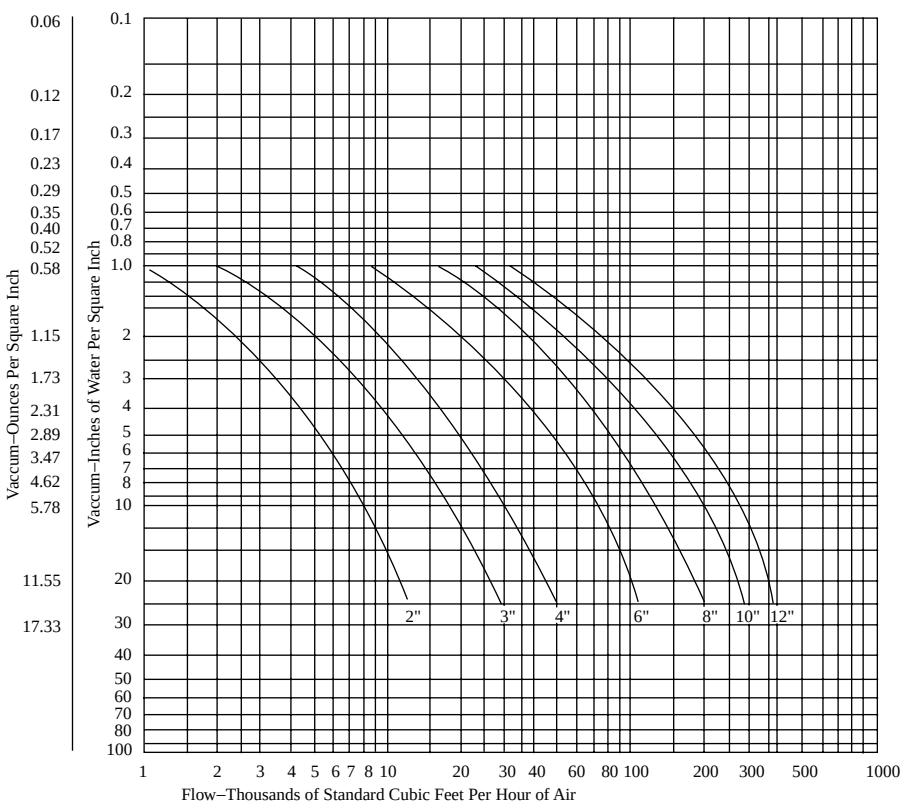

FIG. 7.7a

Airflow capacities of flame arresters in combination with conservation vents. For converting to SI units use: 1 in. = 25.4 mm, 1 ft^3 = 28 l, and 1 $oz/in.^2$ = 431 Pa. (Charts courtesy of Sand & Jurs.)

© 2003 by Béla Lipták

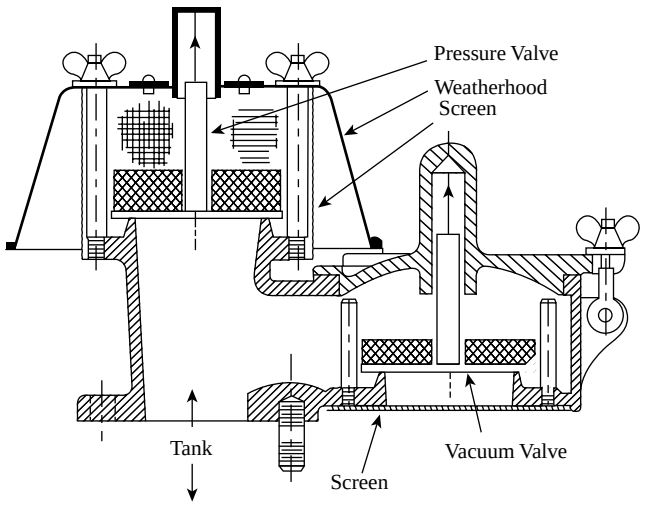

FIG. 7.7b
Conservation vent.

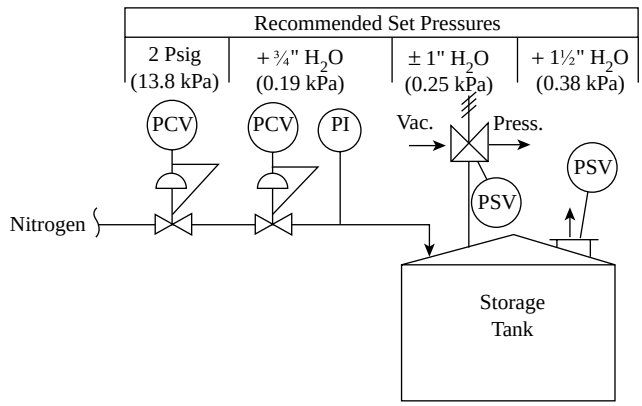

FIG. 7.7c
Venting of blanketed storage tanks.

to provide some mechanism to keep the internal tank pressure within a certain tolerance around the atmospheric pressure during thermal expansion and liquid transfer.

In many cases, a simple vent pipe is not enough. One of these is where the material has a low flash point and would cause a hazard if large amounts were allowed to continuously enter the atmosphere. Another is where the vapor is corrosive, toxic, or expensive, and continuous venting to air is not desirable.

There are several advantages to the use of conservation vents in comparison to the free vent. Conservation vents save the process fluid by reducing the waste of vapors to the atmosphere. For example, a study of the effectiveness of conservation vents by the American Petroleum Institute (API) found that in case of a 30-ft-diameter (9 m) tank having the capacity of 210,000 gal (794 m^3), an annual saving of 1400 gal (5.3 m^3) of material could result from the use of a conservation vent. The study assumed that the stored liquid had a vapor pressure of 5 PSIA (34.5 kPa) at 60°F (16°C), and the conservation vent pressure setting was 3/4 in. (19 mm) H_2O.

By reducing product loss, the conservation vent also reduces the potential for fire and the amount of air pollution around the storage tank. Of course, if at the particular ambient temperature no liquid vaporized at all, a free vent would be sufficient and the value of the conservation vent would drop, as the vapor pressure of the stored liquid increases.

When to Use Conservation Vents

Whether a conservation vent is required, recommended, or not needed depends on the applicable code, the value of the process fluid and the weather. API requires conservation vents on all tanks containing liquids whose flash point is below 100°F (37°C). The National Fire Protection Association (NFPA) requires a conservation vent on all tanks that contain a liquid with a flash point below 73°F (23°C) and a boiling point below 100°F (37°C). NFPA requires a conservation vent or flame arrestor on tanks that contain liquids with flash points below 73°F (23°C) and boiling points above 100°F (37°C) and on tanks that contain liquids with flash points in the 73 to 100°F (23 to 37°C) range.

The flash point of a liquid is the lowest temperature at which sufficient vapors are given off to form a flammable vapor-air mixture above the liquid. Conservation vents are generally recommended for tanks that store liquids have flash points of up to 140°F (60°C). Stored liquids are often heated to prevent freezing and/or to reduce their viscosity. The installation of conservation vents should be considered for all tanks in which the stored liquid is heated to or near to its flash point.

Another application of conservation vents is on tanks that require inert gas blanketing. Inert gas blankets are used to prevent product contamination by air or by the moisture in air and to hold down the vapor layer of low-flash-point materials. Free vents are of no use where a gas blanket is required. One method of venting a blanketed tank is shown in Figure 7.7c.

Determination of Required Capacity There are several guides to tank venting requirements, but one of the most widely used is API's "Guide for Tank Venting." Table 7.7d gives venting capacity requirements for thermal venting, and Table 7.7e gives the required capacities for fire emergency venting of aboveground tanks. In addition, the following recommendations are usually made to cover venting required due to liquid transfer:

For liquids with flash points below 100°F (37°C)—In addition to the capacity requirements for thermal breathing listed in Table 7.7d, provide 17 SCFH (8 l/min) of venting capacity for each gal/min (3.78 l/min) of filling rate and 8 SCFH (3.8 l/min) of inbreathing capacity for each l/min (3.78 l/min) of emptying rate.

For liquids with flash points above 100°F (37°C)—Provide 8.5 SCFH (4 l/min) of vent capacity for each gpm (3.78 l/min) of filling rate and 8 SCFH (3.8 l/min) of inbreathing capacity for each gal/min (3.78 l/min) of emptying rate plus sufficient capacity to meet the thermal breathing requirements of Table 7.7d.

In addition to the above requirements, the diameter of the vent pipe must be at least as large as the largest filling

© 2003 by Béla Lipták

TABLE 7.7d
*Thermal, Venting Capacity Requirements (Cubic Feet Per Hour of Air)**

Tank Capacity		Inbreathing (Vacuum)	Outbreathing (Pressure)	
Barrels*	Gallons*	All Stocks	Flash Point 100°F (37.8°C) or Above	Flash Point Below 100°F (37.8°C)
60	2,500	60	40	60
100	4,200	100	60	100
500	21,000	500	300	500
1,000	42,000	1,000	600	1,000
2,000	84,000	2,000	1,200	2,000
3,000	126,000	3,000	1,800	3,000
4,000	168,000	4,000	2,400	4,000
5,000	210,000	5,000	3,000	5,000
10,000	420,000	10,000	6,000	10,000
15,000	630,000	15,000	9,000	15,000
20,000	840,000	20,000	12,000	20,000
25,000	1,050,000	24,000	15,000	24,000
30,000	1,260,000	28,000	17,000	28,000
35,000	1,470,000	31,000	19,000	31,000
40,000	1,680,000	34,000	21,000	34,000
45,000	1,890,000	37,000	23,000	37,000
50,000	2,100,000	40,000	24,000	40,000
60,000	2,520,000	44,000	27,000	44,000
70,000	2,940,000	48,000	29,000	48,000
80,000	3,360,000	52,000	31,000	52,000
90,000	3,780,000	56,000	34,000	56,000
100,000	4,200,000	60,000	36,000	60,000
120,000	5,049,000	68,000	41,000	68,000
140,000	5,880,000	75,000	45,000	75,000
160,000	6,720,000	82,000	50,000	82,000
180,000	7,560,000	90,000	54,000	90,000

*One cubic foot per hour equals 0.472 liters per minute. One gallon equals 3.78 liters and one barrel equals 42 gallons, or 159 liters.

TABLE 7.7e
Required Capacities for Emergency Relief of Excessive Internal Pressure in Above-Ground Tanks

Tank Capacity		Total Pressure-Relief Capacity SCFH of air
Gallons*	Barrels*	
1,000	23.8	25,300
4,000	95.2	69,500
18,000	428	139,000
25,000	595	166,000
56,000	1,330	253,000
100,000	2,380	363,000
155,000	3,690	458,000
222,000	5,290	522,000
475,000	11,300	624,000
735,000	17,500	648,000
Unlimited		648,000

*One cubic foot per hour equals 0.472 liters per minute. One gallon equals 3.78 liters, and one barrel equals 42 gallons, or 159 liters.

or emptying line connected to the tank. For small, UL-labeled tanks, the required vent line sizes can be obtained from Table 7.7f.

Sizing Much of the sizing data for venting equipment is empirical. Therefore, once venting requirements are determined, the user should refer to published capacity charts to determine vent sizes. As a guide to conservation vent sizing refer to Figure 7.7g, which gives the recommended sizes as a function of tank volume and discharge pumping rates. These recommendations assume that the flash point of the stored liquid is below 100°F (38°C) and the settings of the conservation vent are 1 in. water column (0.4 kPa) for both the positive and the vacuum settings.

Most published data provide the required venting capacity in units based on the venting of free air. In order to convert these data into the venting capacity requirements of other vapors, the following equation may be used:

$$V = \frac{A}{\sqrt{(SG)}} \qquad \textbf{7.7(1)}$$

© 2003 by Béla Lipták

TABLE 7.7f
Vents for Underwriter Laboratory Labeled Tanks

Tank Capacity (Gallons)*	Vent-Pipe Size (Inches)*	
	Buried Tanks	Above-Ground Tanks
To 500	1	$1^1/_4$
501–1,000	$1^1/_4$	$1^1/_2$
1,001–3,000	$1^1/_2$	2
3,001–6,000	$1^1/_2$	$2^1/_2$
6,001–12,000	2	3
12,001–30,000	3	4

*One inch equals 25.4 mm; one gallon equals 3.78 liters.

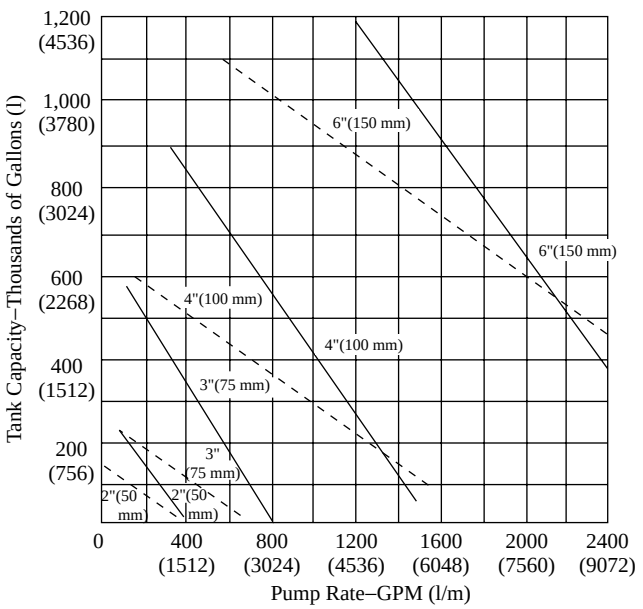

FIG. 7.7g
Conservation vent size required for given tank and pump sizes. Capacity based on pressure and vacuum setting at $1^1/_2$ in. (38 mm) H_2O. Solid lines for pressure; dotted lines for vacuum relief.

where

V = volume of vapor in SCFH
A = volume of air in SCFH
SG = specific gravity of vapor to be vented (air = 1.0)

If the pressure setting of the conservation vent is other than $1^1/_2$ in. H_2O (0.4 kPa), the vent capacity in units of free air can be obtained from Figure 7.7h.

Emergency Vents

The third type of venting device, the emergency vent, is used as a secondary or backup relief device on storage tanks, which can be subjected to external heating such as fire. The emergency vent is a large area cover that is opened when excessive pressure develops in the tank (Figure 7.7i).

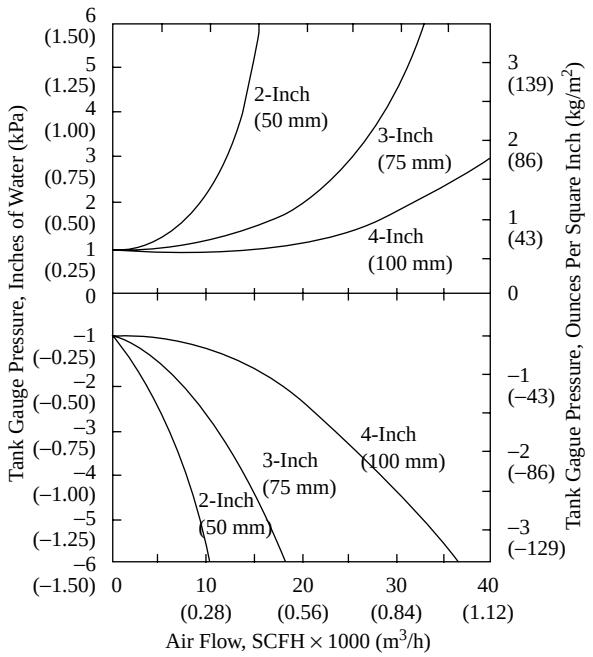

FIG. 7.7h
Approximate capacities for conservation vents with various settings and sizes.

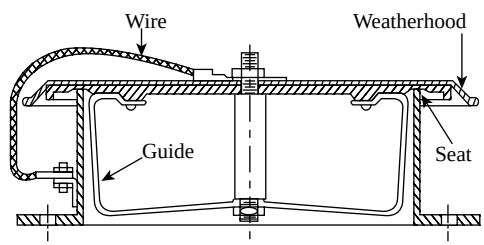

FIG. 7.7i
Emergency manhole cover.

Some constructions of emergency relief devices can be bolted to the tank manhole and also double as manhole cover. NFPA requires that, "Every above-ground storage tank shall have some form of construction or device that will relieve excessive internal pressure caused by external fire." This requirement may be met by use of the emergency vent or by the use of one of several special tank constructions. These special constructions are floating roofs or week-seam constructions.

Dessicating Vents

The desiccant vent air dryer is a device that is sometimes used on storage tanks in conjunction with vents and that may be installed in the vent piping. The desiccant dryer may be required to prevent the contamination of stored liquid due to moisture entering through the tank venting system (Figure 7.7j). It is important to note that the breather valve also has a vacuum relief setting. This is required to prevent vacuum

© 2003 by Béla Lipták

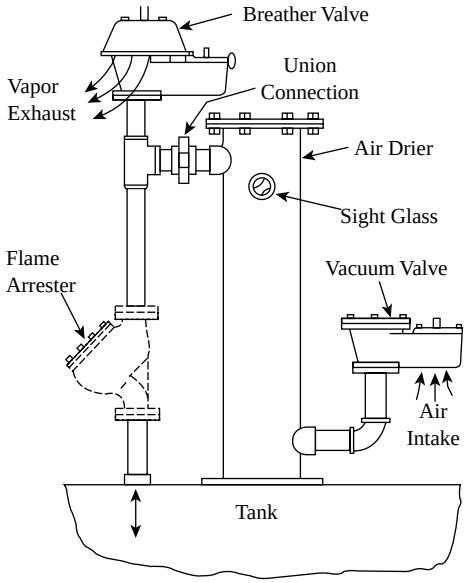

FIG. 7.7j
Breather valve installation with desiccant dryer.

buildup in the tank if the water in the desiccant freezes and thus plugs the dryer. The vacuum setting on the breather valve should be about 1 in. (25 mm) of H_2O below the setting on the vacuum valve.

FLAME ARRESTERS

Flame arresters are in-line or end-of-line venting devices provided with an internal flame-arresting grid. They are designed to prevent an external fire from entering a tank that contains a flammable product (Figures 7.7k and 7.7l). The internal grid or bank of plates is of sufficient size, and the plates are spread so that an external flame that flashes into the arrester will be cooled and extinguished before it can pass through the arrester and into the storage tank. Flame arresters are also available as combination flame arrester/conservation vent units (Figure 7.7m).

When sizing flame arresters, the selected size must be large enough to vent a quantity of air, which equals the volume displaced by product transfer plus the volume generated by thermal expansion. The data given for conservation vents (see Tables 7.7d, 7.7e, and 7.7f) also apply to flame arresters. It should also be noted that a flame arrester of a given size has a lower capacity than the same size conservation vent. Therefore, it is the flame arrester that will determine line and vent nozzle size, if a combination unit is used, or if the two units are installed in series.

Factory Mutual System requires that flame arresters be used under the following conditions:

1. On tanks that contain liquids with flash points below 110°F (43°C)

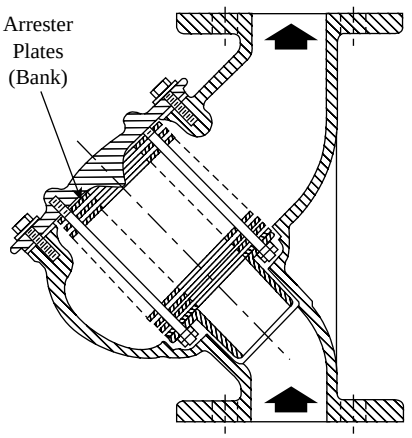

FIG. 7.7k
In-line flame arrester.

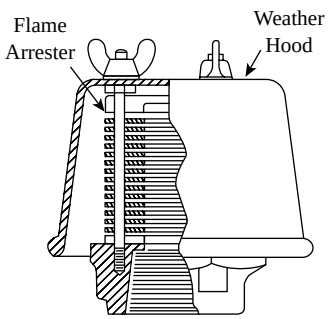

FIG. 7.7l
End-of-line flame arrester.

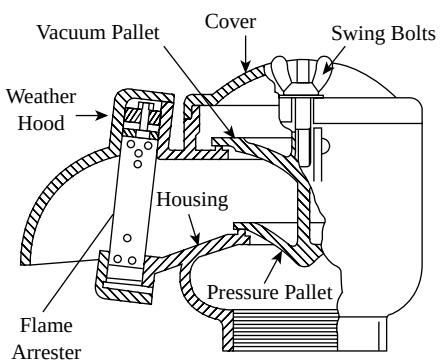

FIG. 7.7m
Combination flame arrester/conservation vent.

2. On tanks that contain liquids with flash points above 110°F (43°C), but where the tank may be exposed to combustibles or other tanks containing liquids with flash points below 110°F (43°C)
3. On tanks where the contents can be heated to their flash points under normal operation

© 2003 by Béla Lipták

NFPA requires that flame arresters or conservation vents be used on tanks that contain liquids with flash points below 73°F (23°C) and with boiling points above 100°F (38°C). NFPA also requires their use on tanks that contain liquids with flash points in the 73 to 100°F (23 to 38°C) range.

Flame arresters cannot always be relied upon to provide tank venting. Whenever the stored material in the tank can foam, plug, or freeze, it is possible that the space between the flame arrester plates will clog and restrict or stop venting. When this condition is anticipated, the flame arrester can be steam-traced to prevent product freezing. Under these conditions it is advisable to provide a secondary pressure-relieving device that will protect the tank in case of flame arrester plugging.

Bibliography

Ahmad, S.M., "Eaaase Relief System Design and Documentation," *Chemical Engineering Progress*, May 2000, p. 43.

American Insurance Association, "Fire Prevention Code," latest edition.

American Petroleum Institute, "Manual on Installation of Refinery Instruments," API Recommended Practice 550, Washington, D.C., latest edition.

American Petroleum Institute, "Sizing, Selection, and Installation of Pressure-Relieving Devices in Refineries," API RP 520, Parts I and II, Washington, D.C., 2000 and 1994, respectively.

Block, B., "Emergency Venting," *Chemical Engineering*, January 22, 1962.

Factory Mutual System, *Handbook of Industrial Loss Prevention*, New York: McGraw-Hill, latest edition.

Fauske, H.K., "Properly Size Vents for Nonreactive and Reactive Chemicals," *Chemical Engineering Progress*, February 2000, pp. 17–29.

Kletz, T., "What Went Wrong? Case Studies of Process Plant Disasters," Houston, TX: Gulf Publishing, May 2001.

Lees, F.P., "Loss Prevention," Gulf Professional Publishing, September 1996.

Lisciani, C., "Vents and Flame Arrester," *Instrumental Technology*, July 1968.

National Board of Fire Underwriters, "Liquefied Petroleum Gases," NBFU No. 58, latest edition.

National Fire Protection Association, "Explosion Venting," NFPA No. 68, Quincy, MA, latest edition.

National Fire Protection Association, "Fire Facts," Quincy, MA, 1982.

National Fire Protection Association, "Flammable and Combustible Liquids Code," NFPA No. 30, Quincy, MA, latest edition.

"Regulator, Safety, Relief, Check Valves," *Measurements and Control*, June 1991.

Vervalin, C.H., *Fire Protection Manual*, Houston, TX: Gulf Publishing, latest edition.

Walter, L.F., "Reshaping Process Safety Regulations," *Chemical Engineering Progress*, March 2002.

Wong, W.Y., "Fires, Vessels and the Pressure Relief Valve," *Chemical Engineering*, May 2000.

© 2003 by Béla Lipták

7.8 Flame, Fire, and Smoke Detectors

R. NUSSBAUM (1969, 1982) **B. G. LIPTÁK** (1995)
S. PATE (2003)

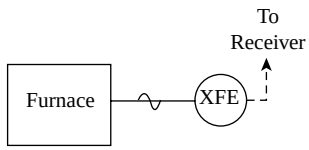

Flow Sheet Symbol

Types:
A. Flame (pilot and main flame detectors in combustion processes)
B. Fire (fire safety devices)
C. Smoke (detect smoldering and the incipient of fires)

Smoke Sensitivity:
2%/ft (303 mm) obscuration ±0.6%/ft (UL)

Costs:
Battery-operated household smoke detectors are available from around $10. Addressable, intrinsically safe smoke detectors with software programmable test option and with both smoke and temperature sensors cost about $100. Flame rod or thermocouple-type pilot flame safeguard detectors cost about $500. Optical flame safeguards for burner management cost from $800 to $3000, with the higher priced units having explosion proof packaging and intelligent electronics.

Partial List of Suppliers:
Ansul Co. (B, C) (www.ansul.com)
Apollo (C) (www.apollo-fire.co.uk)
ASCO (B) (solenoids valves) (www.ascovalve.com)
Autronica (B, C) (fire panels) (www.autronica.no)
Badger (B) (extinguishants) (www.badgerfire.com)
Chemetron (B) (extinguishants) (www.chemetron.com)
Detector Electronics Corp. (A, B) Systems Optical Flame and Gas Detection (www.detronics.com)
Digital Security Controls (C) (www.dscgrp.com)
Dwyer Instruments Inc. (C) (test equipment [smoke generators and test equipment for burners]) (www.dwyer-inst.com)
Electronic Development Labs Inc. (A) (temperature measurement [resistance temperature detectors] pyrometers) (www.edl-inc.com)
E-One (B) (fire pumps/trucks) (www.eone.com)
Faraday LLC (fire panels and smoke detectors) (B, C) (www.faradayllc.com)
Fike Corp. Fike Metal Products Div. (B) (www.fike.com)
Fire-End & Croker Corp. (B, C) (www.fire-end.com)
Fireye (A) (flame scanners) (www.fireye.com)
Fire Lite (B) (fire panels) (www.firelite.com)
Fire Sentry (B, C) (optical fire detectors) (www.firesentry.com)
Flame Gard Inc. (kitchen spark and grease flame arrestors) (A, B) (www.flamegard.com)
Forney Corp. (www.anarad.com)
General Monitors Inc. (A, B) (flame detectors) (www.gmi.com)
Hochiki (B, C) (smokes and panels) (www.hochiki.co.jp)
Honeywell (B) (fire panels and smoke and heats) (www.honeywell.com)
Horiba Instruments (C) (infrared thermometer) (www.hii.horiba.com)
International Safety Instr. (B) (www.intsafety.com)
Intronics (A) (www.intronics.co.uk)
Ircon Inc., Subsidiary of Square D Co. (A) (thermal imaging) (www.ircon.com)

© 2003 by Béla Lipták

Kidde-Fenwal Inc. (B, C) (fire panels smokes and heats, extinguishants) (www.kidde-fenwal.com)
Life Safety Associates Inc. (B, C) (training organization) (www.lifesafety.com)
MSA Instrument Div. (B) (flame and gas detectors) (www.msanet.com)
Notifier (B) (fire panels) (www.notifier.com)
Pyronics Inc. (A) (flame scanners) (www.pyronics.com)
Pyrotronics (B) (fire panels) (www.sbt.siemens.com)
Reliable Fire Equipment (A, C) (www.forneycorp.com)
Sierra Monitors (A, B, C) (optical fire detectors) (www.sierramonitor.com)
SimplexGrinnell (B, C) (fire panels) (www.simplexgrinnell.com)
Spectrex (B) (optical flame detectors) (www.spectrex.com)
TSI Inc. (C) (www.tsi.com)
Wajax Pacific Fire Equipment Inc. (B, C) (fire pumps) (www.wajax.com)
Western Fire Equipment Co. (suppliers to fire brigades of clothing and engines) (B) (www.western-fire.com)

INTRODUCTION

This section covers both the types of instruments that guarantee the maintaining of combustion and the instruments that serve to warn the occupants of a building when a fire starts. The devices used for these purposes operate on similar principles and therefore can be discussed in the same section of the handbook. The fire and smoke detectors will be discussed first. This will be followed by a discussion of optical fire detectors, concluding with a description of fire safeguarding devices used in burner management.

FIRE AND SMOKE DETECTORS

A fire occurs in four distinct phases. In the first, or incipient, phase, warming causes the emission of invisible but detectable gases. In the second phase, smoldering, smoke is formed, so smoke detectors can be used. In the third phase, when the ignition temperature has been reached, flames are present and therefore their emitted radiation (infrared [IR] and ultraviolet [UV]) can be detected. In the fourth and last stage of the fire, heat is released; the temperature of the space starts to rise, and the use of thermal sensors becomes feasible. Obviously, the sooner the evolution of a fire is detected, the less damage it is likely to cause. Therefore, fire and smoke detectors are discussed here in the order of their applicability to the four stages of fires.

Smoke Detectors

Ionization Chamber Sensors In the early warming and incipient stage of fire, combustion products are emitted without visible smoke, flame, or heat release. Ionization chamber type sensors are used to detect the presence of these gases by analyzing the composition of the atmosphere through the measurement of conductance. The ionization chamber contains two electrodes held at different potentials and a radioactive alpha particle source that ionizes the air in the chamber. The ionization current that results reflects the composition of the air and rises as the invisible combustion gas concentration rises.

Photoelectric Sensors Once the fire starts to smolder and smoke is present, photoelectric sensors can be used to activate alarms. Most smoke detectors use a light beam and a photoelectric cell or transistor. As the smoke density rises, less light passes from the source to the receiver and an alarm is activated. Smoke detectors must be maintained so that dust and dirt accumulation will not cause false alarms. In most fires the casualties are not caused by the heat of the fire, but by the toxicity of the combustion gases and by asphyxiation from smoke. Therefore, early warning systems, such as photoelectric smoke detectors, are very important.

Thermal Sensors

There are two types of thermal sensors that are used in fire protection application. One is the rate-of-rise sensor, and the other is the absolute temperature sensor. Rate-of-rise alarms are usually set at 15 to 20°F (8.3 to 11.1°C) per minute. This rate of rise can be detected by either bimetallic pneumatic tube sensors or thermoelectric sensors. The fixed temperature sensors actuate an alarm when the space temperature reaches a present limit. They are usually either bimetallic or fusible link devices. In the fusible link devices, the melting of a low-melting-point solder activates the operation of sprinklers or other extinguishing devices.

Flame Sensors

Once there is a flame, it emits a flickering radiation, which is mostly in the IR wavelength. Therefore, IR sensors can be used to detect the presence of flames. The flickering frequency of open flames (5 to 25 cps) allows the discrimination of flames from infrared radiation generated by light bulbs (at 120 cps) or from unmodulated ambient light sources. False alarms can still be caused by sunlight reflections from windows or rippling water surfaces, or by flickering neon signs. Therefore, the mounting location of the sensor should be carefully selected. Flame detectors should be used when combustible gases or flammable liquids are present, where the ignition is almost instantaneous and has practically no incipient or smoldering stage.

© 2003 by Béla Lipták

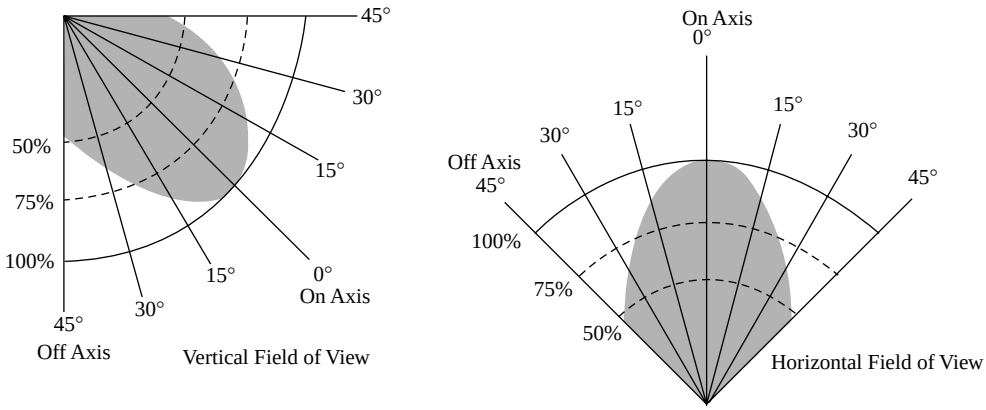

FIG. 7.8a
Cone of vision for a 90° with 50% off axis sensitivity.

Types of Optical Flame Sensors There are basically five types of optical detectors in addition to closed-circuit television (CCTV):

1. UV
2. IR
3. UV/IR
4. Dual IR
5. Multi-IR

Flame detectors are specified by their cone of vision, which is defined by the field of view and the on axis detection distance to the fire (Figure 7.8a). The angle of the field of view is defined by the 50% of the on axis detection capability of the detector. Typically these are about 90° (horizontally) although there are some detectors with fields of view of up to 120°, or with 100% off axis detection capability. A distance to a specified size fuel source (typically 1 ft^2) is also specified. This fuel source is generally *n*-heptane although other fuels are often listed (e.g., gasoline, methane plume, etc.). The manufacturer's data sheet should indicate the off axis detection distance, generally graphically (or as a percentage of the on-axis distance).

When selecting a flame detector, the specifying engineer must take into consideration the fuel source and the cone of vision of the selected detector to ensure adequate coverage of the potential hazard. Because these are optical devices, it is important to ensure that the detector has an unobstructed view to the hazard, and that the selected detector automatically verifies the cleanliness of its lens. Several manufacturers offer an optical integrity check and therefore the ability of the detector to see a fire. The failure of the optical check should generate a fault alarm.

The flame detection algorithms within the flame detectors are highly specific, and often their response and capability to detect a fire will vary from manufacturer to manufacturer. Tables 7.8b and 7.8c provide data on the flame detection distance and the false alarm sources, respectively, of the various optical fire sensors discussed below.

TABLE 7.8b
Typical Optical Flame Detection Distances (Feet)

Type	*UV*	*IR*	*Dual IR*	*UV/IR*	*Multi-IR*
Gasoline	90	85	100	100	210
Diesel	65	65	50	40	150
Methanol	50	50	20	55	150
Methane	80	45	25	90	100
Hydrogen	50	NR	15	NR	NR
Metal fires	15	NR	15	NR	NR
Black powder	15	40	40	NR	NR

Note: NR – no response

TABLE 7.8c
False Alarm Source Impact

Type	*UV*	*IR*	*Dual IR*	*UV/IR*	*Multi-IR*
Arc welding	■	▲	▲	▲	▲
Modulated IR radiation	●	▲	▲	●	●
Electrical arcs	■	▲	●	●	●
Radiation (nuclear)	■	●	●	●	●
Lightning	■	●	●	●	●
Grinding (metal)	■	●	●	●	●
Artificial lighting	■	●	●	●	●
Sunlight	▲	●	●	●	●

Note: ■ Severe effect, ▲ Some effect, ● No effect

Ultraviolet Detectors This optical technology was developed in the early 1970s using UV detection with Geiger Muller tubes. These were the first optical flame detectors and are based upon a Geiger Muller tube. The UV detectors count the number of pulses in the tube and give a total number of counts per second. The detector then alarms when a predetermined threshold has been exceeded. The UV detector is very good for flame detection in enclosed spaces. It is not so good

© 2003 by Béla Lipták

for outdoor applications as there are too many potential sources for false alarms.

UV detectors are good for sensing hydrogen and methanol fueled fires (fires that emit predominantly in the UV spectrum) because these materials burn with a blue flame (i.e., strong UV source). These detectors are generally the fastest responding typically 30 ms. The drawback is that they are prone to false alarming from strong UV sources such as arc welding and lightning. Even if not directly in the field of view, UV reflections will trigger an alarm. UV is attenuated by oil films and is obscured by smoke. Because of the sensitivity of UV detectors to lightning, it is generally not recommended for outdoor applications. Another potential cause of false alarms is static discharges that can be detected by some UV detectors.

Infrared Detectors In general, IR detectors are good for detecting hydrocarbon based fires (i.e., fires that have strong IR emissions). IR detectors are generally not as fast as UV detectors to respond to a fire. A disadvantage of IR is that ice buildup can desensitize the detector (lessen its ability to detect a fire), but this can be overcome with heated optics. IR does not respond to electric arc welding unless the welding is very close to the detector, in which case the detector may alarm due to seeing the burning from the welding process. Some IR detectors have flicker and statistical analysis algorithms to minimize the effects of black body sources, a false alarm source.

UV/IR Detectors These detectors combine the best of both the UV and IR and result in fewer false alarms than UV or IR detectors alone. Depending on how the individual manufacturers use the two signals also affects their performance. Some UV/IR detectors "AND" both signals such that in order to generate an alarm, both UV "AND" IR sources must be present and exceeding their threshold levels. Other designs might "OR" the two sources such that only UV or IR will alarm. Yet others may ratio the two signals; in order to generate an alarm, both sources of UV and IR must not only be present, but also must exceed a certain ratio.

One disadvantage is that the loss of one (either UV or IR) will prevent alarming except in the "OR" design. High background IR (engine body) may meet the IR condition in an "AND"-ed detector such that an arc or lightning would cause a false alarm. Also, it is possible to saturate the UV portion in a ratio-based detector, if it is so designed that the corresponding IR would have to be excessively large to signal a fire alarm.

Dual IR These detectors have two IR sensors. The dual IR sensors seem to be falling behind the more favored multispectrum (triple IR) detectors. These types of detectors generally have longer detection ranges than UV or IR sensors and are more fuel specific in their applications. Dual IRs can be desensitized by high background levels of IR, reducing their ability to detect a fire.

Multispectrum IR These detectors have three IR detectors. Each manufacturer's multispectrum detector is somewhat different. These differences are due to the differing (patented) flame detection algorithms used by the manufacturers (i.e., how the three optical IR signals are processed). In general, these detectors offer greater detection ranges and give fewer false alarms. They are currently the best performing flame detectors available.

Closed Circuit Television This is an emerging technology and there are only a few products to choose from. These types of detectors come either as black and white or color images that are human viewable. As they are only sensitive to the red-green-blue spectrum they are not suitable for blue/translucent flames from such fuels as hydrogen and methanol. The advantage of CCTV detectors is that the user is able to verify the presence of a fire before taking any action. Since this is an emerging technology, there is little information on their performance.

FLAME SAFEGUARDS (BURNER MANAGEMENT)

In this section, a brief description of the more widely used means of flame detection will be presented. After some basic theoretical discussions, the various devices will be described. The feature tabulation given in Table 7.8i will enable the reader to select the most desirable sensor for the application at hand. Functions of flame sensors as part of burner control systems will be discussed later.

Among the many characteristics of flame, the following have been successfully used to detect the presence flame:

1. Heat generated
2. Ability to conduct electricity (ionization)
3. Radiation at various wavelengths, such as
   a. Visible
   b. IR
   c. UV

Methods of detecting these characteristics are described below.

Heat Sensors

The earliest flame sensors utilized the most obvious characteristics of the flame—namely, the heat generated. These devices were thermocouples, bimetallic elements, etc. For small installations and domestic burners these devices were satisfactory and are still used. Their relatively slow response (2 to 3 min) renders them unsuitable, and indeed dangerous, for larger installations.

Let us take a large reforming furnace as an example. If it requires 1000 SCFM (0.47 m^3/s) of fuel gas, and flame failure is detected only after 2 to 3 min, the 2000 to 3000 ft^3 (56 to 84 m^3) of unburned fuel gas admitted to the furnace will create an explosion hazard. A detector with a response of 4 to 6 s or less will not permit sufficient amounts of gas to enter the furnace to cause an explosion. Another obvious disadvantage of these sensors is that since they only sense

© 2003 by Béla Lipták

heat, they will be unable to distinguish between heat generated by flame or that radiated by the hot refractory.

Conduction-Type Detectors

The first major breakthrough toward fast (but unreliable) detection of the flame was the discovery that flame is capable of conducting electricity. This is true because the flame, being a chemical reaction between a fuel and oxygen, liberates a large number of electrons. Because of ionization, the flame can conduct both DC and AC currents, which are utilized to establish an electrical circuit. A rod immersed in the flame (flame rod) acts as one electrode, the burner as the other. This proved to be fast but unreliable in that a high-resistance electrical short caused by, for example, faulty insulation, could simulate the presence of flame.

Rectification

Any electrical device that offers a low resistance to the current in one direction but a high resistance to the current in the opposite direction is called a rectifier. An ideal rectifier is one with zero resistance in one direction and infinite resistance in the opposite direction.

When AC is passed through a rectifier, the current obtained will be rectified current. It will consist of only that portion of the input current to which the rectifier presented low resistance.

By making the area of one of the electrodes (the burner in this case) much larger than the other, conduction will essentially take place only in one direction (Figure 7.8d).

The Rectification Phenomenon The explanation for the above phenomenon is that when ionization takes place, electrons are liberated from the gas molecules and are free to move about, constituting electric current. In addition to the freed electrons, the negative electrode contains many surplus electrons acquired through the negative side of the external circuit that makes the electrode negative. These surplus electrons repel each other, and, given enough positive ions to attract them, will leave the negative electrode. The number of electrons leaving the negative electrode and entering the positive electrode determines the rate of current flow. It is apparent that the current flow depends on the number of positive ions that get near enough to the negative electrode. Suppose the area of one electrode is made several times large than the other and that electrode is negative. This will increase the flow of electrons to the other (positive) electrode.

If AC is applied, the current through the flame will be rectified. Indeed, using this arrangement and thereby obtaining a *half-wave rectified* current, the lack of safety due to simulated flame was eliminated, as the circuitry associated responded only to a half-wave rectified signal. Unrectified alternating current or direct current input to the detecting circuit will result in a safe shutdown. Because flame rods are in direct contact with the flame, they have to be cleaned or replaced often. Above approximately 2000°F (1100°C), very few metals can be used and even these become brittle. Fuels with high sulfur content burn with flames having low resistance, resulting in low flame rod output and leads to nuisance shutdowns.

To avoid direct contact with the flame and the maintenance problems arising from it, another obvious characteristic of the flame—its ability to radiate energy—was used.

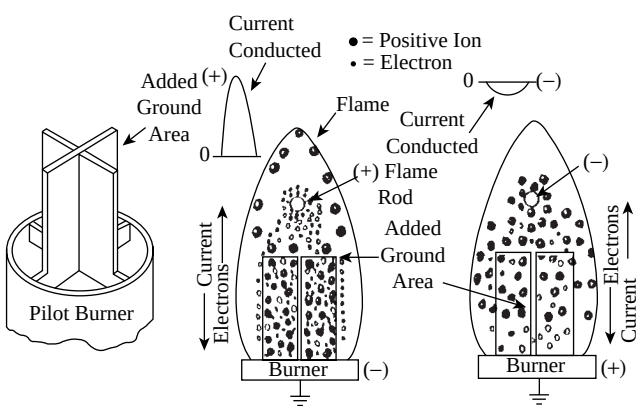

FIG. 7.8d
Rectification by flame.

Radiation Types

Radiation emitted by the flame covers the energy spectrum for wavelengths corresponding to UV, visible, and IR range (Figure 7.8e).

Visible Radiation Visible radiation occupies about 8% of the total bond of wavelengths radiated by the flame. To detect this position of the radiation, a rectifying phototube is used. It consists of a light-sensitive coated cathode of large surface and an anode encapsulated in a vacuum (Figure 7.8f).

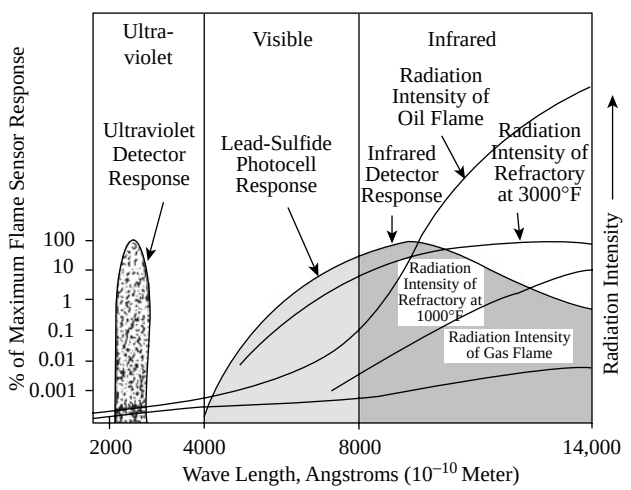

FIG. 7.8e
Applicable ranges of selected flame sensors and the range of hot refractors effect.

© 2003 by Béla Lipták

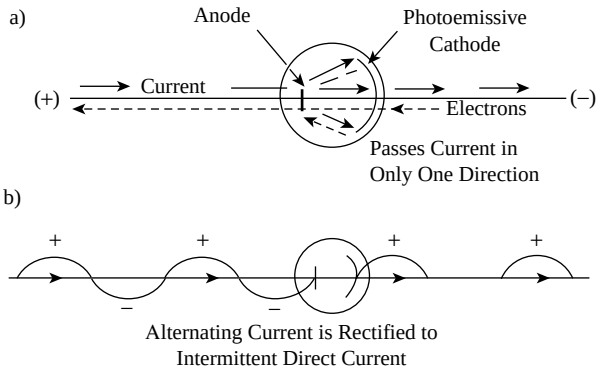

FIG. 7.8f
Rectifying phototube.

The number of electrons emitted by the cathode is approximately proportional to the light intensity. Conduction will take place only when the anode is positive.

If AC is applied, the phototube will act as a half-wave rectifier. The associated electronic circuit will respond only to such a rectified signal, and high-resistance shorts will not simulate flame. At high temperatures, the refractory (noncombustible insulator used to line interiors of furnaces) emits visible radiation. The detector might not be able to distinguish this radiation from the visible radiation emitted by flames; therefore, caution must be exercised in installing the detector in such a position that it will not be able to sight hot refractory. Use of rectifying photocells is limited to oil-fired burners, because visible radiation emitted by gas flame is insufficient to be detected by this type of flame sensor.

Cadmium-Sulfide Photocell The single element of this type of photocell is coated with cadmium sulfide, which is sensitive to radiation in the visible spectrum only. In darkness cadmium sulfide has high electrical resistance. When exposed to light, it conducts freely and almost instantaneously. The electrical resistance of cadmium sulfide decreases directly with increasing intensity of light. Like lead sulfide, it acts as a variable resistor and conducts current equally well in either direction.

This photocell is used in series with the coil of a low voltage relay in an AC circuit. When the cell sees sufficient light to pass a given current, the relay "pulls in." The sensitive region of the cadmium-sulfide cell is such that it will not respond to gas flames and can, therefore, be used with oil flames only. The performance of this cell will not be affected by the "shimmering" effects of hot refractory.

Infrared Radiation IR radiation covers the largest portion, approximately 90%, of the band of wavelengths emitted by the flame. Its intensity is by far the strongest of all radiation forms emitted. The IR radiation emitted is a more reliable means of detection than the visible radiation. It is emitted by gas as well as oil flames, and the intensity never drops to zero.

Lead-Sulfide Photocell This cell is sensitive to IR radiation and is the most widely used device for such detection. Similar to the principle of the cadmium-sulfide photocell, the principle of the lead-sulfide photocell is to change its resistance inversely to the IR radiation it is subjected to. It is a variable resistor and conducts electricity equally well in both directions without rectification. The current flow is a measure of flame strength.

The signal-sensing circuit responds only to so-called flame frequencies. When looking at a flame, it seems to burn steadily. But if the eyes were sensitive enough to very rapid changes, it could be seen that the flame burns brightly at one instant and less brightly the next. The flame really flickers or pulsates, but much too rapidly for this to be detected by the human eye. The frequency of the flicker is very irregular, but may be detected by an electronic circuit designed to accept only a proper band of frequencies. Such a tuned circuit is selective and will not be affected by IR radiation emitted by hot refractory, nor can a high-resistance short simulate a flame.

Experiments show that a shimmering effect caused by movement of hot gases between the refractory and photocell can fool the circuit and flame simulation can occur. This so-called shimmering can be demonstrated by viewing objects through the heated air over a candle.

Ultraviolet Radiation Seemingly, UV is the least significant portion of radiation. It represents only about 1% of the total radiation and covers 10% of the emitted band of wavelengths. UV radiation is emitted by gas as well as oil flames. The device popularly known as a UV detector is a gas-filled tube with voltage applied between its two electrodes (anode and cathode).

The tube is conductive only if voltage is applied at its terminals, and it is subjected to UV radiation.

It is readily seen that a high-resistance short cannot simulate flame, nor can it be affected by the hot refractory. This is because no UV radiation will be emitted by refractories below approximately 2500°F (1370°C). Compared to the detectors so far mentioned, the UV cell is foolproof.

In addition to all these attributes, some UV detectors have an additional built-in safety feature. This consists of a shutter arrangement that blocks the view of the cell for a fraction of a second about 20 times each second, interrupting the circuit that can reestablish current flow again only if UV radiation still exists. This arrangement makes the detector responsive to flame failure within a fraction of a second, because it has to convince itself 20 times a second that flame exists.

Installation

Proper installation of flame sensors is essential to safe operation. Installations of these sensors fall into three categories:

1. Pilot and main flames supervised simultaneously—Checking the pilot and main flames simultaneously is the most desirable method of flame supervision. When

© 2003 by Béla Lipták

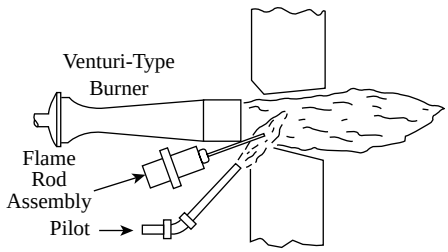

FIG. 7.8g
Pilot and main flame monitored by flame rod.

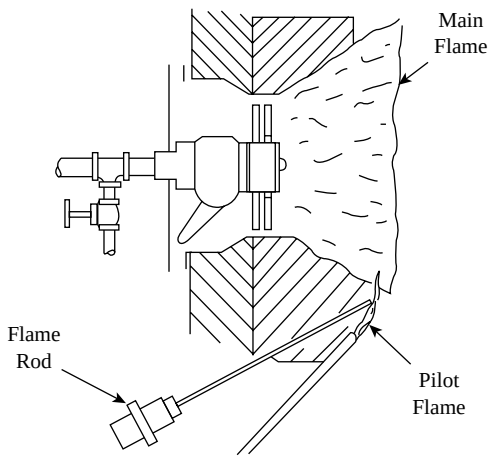

FIG. 7.8h
Mechanical fan-type burner. Pilot flame only is proved.

this arrangement is used, the pilot is capable of safely igniting the main flame (Figure 7.8g). The flame rod in this case is located in the path of both the main flame and the pilot flame.

2. Only pilot and flame supervised—On some installations it may be impossible to prove the pilot and main flames simultaneously because variations of the main flame envelope at different firing rates. This condition prevails, for example, in mechanical fan-type burners. The recommended practice of installation in this case is to supervise the pilot flame (Figure 7.8h).
3. Only main flame supervised—In application where the pilot flame is not lit continuously but only on light-off, the main flame is supervised. It is essential that the sensor be installed in such a way that it will be able to feel or see the flame during all variations in firing rates and draft adjustments.

The above considerations are applicable for flame rods as well as for the different viewing devices. Additional care must be exercised in the installation of rectifying phototubes and lead-sulfide photocells to ensure that incandescence of hot refractory or shimmering of hot air will not simulate the flame. This is accomplished by limiting the view of the devices through a restriction orifice.

Portholes for viewing devices must be cleaned regularly to ensure an unobstructed view and thus prevent nuisance shutdowns.

CONCLUSIONS

The order of presentation for the different types of sensors was intended to show how the limitations of each design have been eliminated.

Flame Guards

Starting with the heat sensors, it was seen that their response time rendered them unsuitable for industrial applications. The flame rods provided for fast response, however, their direct contact with the flame and the consequences, such as brittleness or oil and carbon deposits on the rod, limited their usefulness. Photocells utilizing the visible range of radiation were limited by their inability to reject radiation from the refractory, and their useful range covered only oil flames.

The infrared detector eliminated most of the above shortcomings, but shimmering of hot air could still fool the detecting circuit. It is safe to say that UV detectors can be used reliably in any application. Their relatively high cost demands that the situation be carefully investigated for possible application of other sensors.

In an oil-fired furnace, the cadmium-sulfide cell can be safely used if it is installed so that it will not see the hot refractory. For combination oil and gas furnaces, the lead-sulfide cell will work satisfactorily if it is installed with its view pointed toward the flame through a restricting orifice so that it will not see shimmering hot air.

All devices except the flame rods share the common advantage of not being in contact with the fuel and the flame. The temperature limitations imposed on them are easily satisfied because the temperature outside of the furnace is unlikely to reach 150°F (66°C). The purpose of these installations is safety, and, therefore, cost consideration can be only secondary.

For a summary of flame guard sensor features, see Table 7.8i.

Optical Fire Detectors

In selecting the right fire detection system, the user must analyze the potential hazard and false alarm sources and select the detector that can signal an identified fire with the highest immunity from false alarms (Tables 7.8b and 7.8c). The specific cone of vision of the selected flame detector should be evaluated to make sure that it will give adequate coverage to the particular fire hazard (Figure 7.8a). These detectors must also have an unobstructed view to the fire hazard.

© 2003 by Béla Lipták

TABLE 7.8i
Comparison of Flame Safeguards

Principle of Flame Detection	*Rectification*		*Infrared*	*Visible Light*	*Ultraviolet*
Type of Detector	*Rectifying Flame Rod*	*Visible Light Rectifying Photo Tube*	*Lead-Sulfide Photocell*	*Cadmium-Sulfide Photocell*	*Ultraviolet Detector Tube*
		ADVANTAGES			
Same detector for gas or oil flame			✓		✓
Can pinpoint flame in three dimensions	✓				
Viewing angle can be orificed to pinpoint flame in two dimensions		✓	✓	✓	✓
Not affected by hot refractory	✓			✓	✓
Checks own components prior to each start	✓	✓	✓	✓	✓
Can use ordinary thermoplastic covered wire for general applications, no shielding needed	✓	✓			✓
No installation problem because of size			✓	✓	
		DISADVANTAGES			
Difficult to sight at best ignition point			✓		
Exposure to hot refractory may reduce sensitivity to flame flicker and require orificing			✓		
Flame rod subject to rapid deterioration and warping under high temperatures	✓				
Not sensitive to extremely hot premixed gas flame			✓	✓	
Temperature limit too low for some applications	✓	✓	✓	✓	
Shimmering of hot gases in front of hot refractory may simulate flame			✓		
Hot refractory background may cause flame simulation		✓			
Electric ignition spark may simulate flame					✓

Bibliography

British International & Standards, "Fire detection and fire alarm systems," BS-EN 54-1–7, United Kingdom, 1996.

Nolan, D.P., *Handbook of Fire and Explosion Protection Engineering Principles for Oil, Gas, Chemical and Related Facilities*, New Jersey: Noyes Publications, 1996.

Factory Mutual Research Corporation, *Handbook of Industrial Loss Prevention*, New York: McGraw-Hill, latest edition.

Factory Mutual Research Corporation, Standard 3260, "Radiant Energy Sensing Fire Detectors for Automatic Fire Alarm Signalling," latest edition.

Kang, Y., Wen, J.X., McGrattan, K.B., and Baum, H.R., "Use of a Laminar Flamelet Approach in the Large Eddy Simulation of Flame Structure at the Base of a Pool Fire," Society of Fire Protection Engineers; International Interflam Conference, 9th Proceedings, Vol. 1, Edinburgh, Scotland, September 17–19, 2001.

National Fire Protection Association Standards, "Municipal Alarm Systems," Standard 73, Quincy, MA, latest edition.

National Fire Protection Association Standards, "Air-Conditioning Systems," Standard 90A, Quincy, MA, latest edition.

National Fire Protection Association Standards, "Central Station Signaling Systems," Standard 71, Quincy, MA, latest edition.

National Fire Protection Association Standards, "National Electrical Code," Standard 70, Quincy, MA, latest edition.

National Fire Protection Association Standards, "National Fire Alarm Code," Standard 72, Quincy, MA, latest edition.

National Fire Protection Association Standards, "Life Safety Code," Standard 101, Quincy, MA, latest edition.

Papadopoulos, G., Bryant, R.A., and Pitts, W.M., "Particle Image Velocimetry in Flickering Methane/Air Diffusion Flames," U.S. Sections of the Combustion Institute, 2nd Joint Meeting, hosted by Lawrence Berkeley National Laboratory, Proceedings, Oakland, CA, March 25–28, 2001, pp. 1–16.

Zheng, G., Wichman, I.S., and Benard, A., Opposed-Flow Flame Spread over Polymeric Materials: Influence of Phase Change, *Combustion and Flame*, Vol. 124, No. 3, February 2001, pp. 387–408.

© 2003 by Béla Lipták

7.9 Leak Detectors

R. K. KAMINSKI (1982) **B. G. LIPTÁK** (1995, 2003)

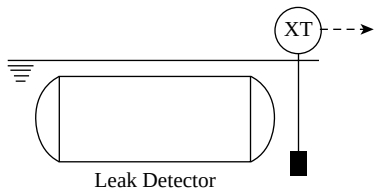

Leak Detector
Flow Sheet Symbol

Types:

1. Above ground detectors
   - 1A. Pressurization
   - 1B. Bubbles, paints, etc.
   - 1C. Combustible and toxic
   - 1D. Ultrasonic
   - 1E. Thermal conductivity
   - 1F. Halogen leak detectors
   - 1G. Others (vacuum, thermograph, etc.)
2. Underground leak detectors

Sensitivity:

1B. 10^{-4} cm^3/s
1C. See Tables 7.9a and 7.9b
1E. 10^{-5} cm^3/s; see Table 7.9c
1F. 10^{-7} cm^3/s

Costs:

A case of bubbling foam bottles costs $40. A portable, intrinsically safe combustible gas detector with 100 ppm sensitivity costs about $300, a portable toxic gas monitor costs about $600, an ultrasonic leak detector about $1200, a portable thermal conductivity leak detector with 10^{-5} cm^3/s sensitivity costs $1600; and halogen leak detectors cost about $3000. The cost of thermography sensors is around $10,000, and an average mass spectrometer costs $25,000, but their cost can range from $3000 to $150,000, depending on application complexity and accessories. Underground leak detector systems are available for single- and multiple-point gas monitoring applications (about $2500 for single-point and $8000 for up to 12 points). In double walled tank installations, if level sensor sensitivity is sufficient, the cost will be as given in Chapter 3.

Partial List of Suppliers:

Acoustic Systems Inc. (1D) (www.wavealert.com)
AFX Instruments (ozone)
Alcatel Vacuum Products Inc. (1G) (www.alcatelvacuums.com)
Alert Technologies (www.alerttech.com)
American Gas and Chemical Co. (1B) (www.amgas.com)
A-Vac Industries (1F) (www.avac.com)
Barcharach (1C) (www.bacharach-inc.com)
Capital Controls Co. (1C) (www.capitalcontrols.com)
Cole-Parmer Instrument Co. (1B, 1C, 1E) (www.coleparmer.com)
Control Instrument Corp. (www.controlinstruments.com)
Davis Instrument (1D) (www.davisontheweb.com)
Delphian Corp. (1C) (www.delphian.com)
Detcon Inc. (1C) (www.detcon.com)
Sam Dick Industries (1C) (www.ges.com)
Fluid Components Inc. (2) (www.fluidcomponents.com)
Foxboro-Invensys Co. (www.invensysips.com) (1C)
Furness Controls (www.furness-controls.com)
GasTech Environmental Monitors (2)
Gow-Mac Instrument Co. (www.gow-mac.com)
International Sensor Technology (1C) (www.intlsensor.com)
Ion Track Instruments (1E, 1F) (www.iontrack.com)

© 2003 by Béla Lipták

Laco Technologies (1F) (www.lacotech.com)
LDS Vacuum Products (1G) (www.lds-vacuum.com)
Leybold Inficon Inc. (1F) (www.inficon.com)
Material Control Inc.
Matheson Gas Products (1B) (www.mathesontrgas.com)
MDA Scientific (1C) (www.zelsns.com)
MKS Technology (1F) (www.mksinst.com)
MSA Instrument Div. (1C) (www.msa.net)
MTS Systems Corp. (www.mtssensors.com)
Preferred Rimcor Instruments (www.preferred-mfg.com)
Schoonover Inc. (www.schoonover inc.com)
Scott Specialty Gases (1B) (www.scottgas.com)
Sierra Monitor Corp. (1C) (www.sierramonitor.com)
SubSurface Leak Detection (1F) (www.subsurfaceleak.com)
Telatemp Corp. (1B) (www.telatemp.com)
Teledyne Analytical Instruments (1C) (www.teledyne-ai.com)
TM Electronics (1S, 1B, 1F) (www.tmelectronics.com)
U.E. Systems Inc. (1D) (www.uesystems.com)
Uson LP (1C) (www.uson.com)

INTRODUCTION

This section covers a variety of sensors that are used in leak detection applications, including leakage through valves and steam traps, tightness of aboveground tanks or pipes, and the measurement of tank leakage underground.

When a particular chemical is leaking into the atmosphere in an industrial or laboratory environment, the sensor used to detect its ambient concentration can be a combustible or toxic analyzer or any of a long list of other analyzers, discussed in Chapter 8. In this section, the emphasis is on those types of leak detectors that detect the actual leak as it occurs.

Chemical materials and fuels that leak into the atmosphere represent both a financial loss and a resource loss. Fluid leaks also waste energy because energy goes into the shipment as well as the processing of chemicals. In addition, the safety aspects of leak detection are extremely important because the escape of toxic, flammable, or explosive materials can cause accidents. See Table 7.9a for an orientation of a limited number of leak detection applications and sensor types that are suited for those applications.

ABOVEGROUND LEAK DETECTION METHODS

Pressurization or Hydrostatic Testing

Pressurization by pneumatic or hydraulic means is probably the most widely used method in industry. The fall of a pointer on a pressure gauge can indicate a leak.

Various standards and codes explain specific procedures for piping, pneumatic instrumentation systems, and vessels. The recommended practice of the National Fire Protection Association (NFPA) goes into considerable detail on how to handle underground leaks. American Petroleum Institute (API) Standard 527 describes a method for checking the leakage at the seats of safety relief valves.

Test equipment is available for pressure testing, including special fittings for plugging off lines and testing joints.

Using Paints, Dyes, or Bubble Emission Commercial formulations are available that will bubble or foam at the point of a leak. Safe materials are available for different chemical applications. Once the existence of a leak has been proved

TABLE 7.9a
Orientation Table for Leak Detectors

Application	*Detector Options*
Personnel protection	Gas badges
Gas leaks, general	Handheld gas detectors Personnel protection indicators Wall mounted gas detector
Water leaks	Colormetrics Tracer dyes
Small parts	Immersit immersion fluid Tracer dyes
Unpressurized pipes and containers	Colormetrics Ultrasonic leak detector Tracer dyes
Pressurized pipes and containers	Liquid leak detector Ultrasonic leak detector
Large parts Large containers	Liquid leak detector Hydrostatic leak testing Immersit immersion fluid Handheld gas detectors Ultrasonic leak detector Colormetrics Tracer dyes Inspection penetrants
Oil/fuel leaks	Colormetrics Tracer dyes FuelGuard for AFVs

© 2003 by Béla Lipták

by pressurization, the bubble emission technique can help to isolate its location.

Aerosols, paints, and papers that change color due to chemical reaction are used in much the same way as the materials that bubble and foam. They are applied to the exact area that is being tested, and the color change spots the leak.

In detecting steam leakage from steam traps, a tape is fastened to the steam trap's outlet piping. If a spot on the tape remains silver, the trap is working. If live steam passes through the trap continuously, the spot turns black because of overheating.

Dyes can be used to label sewage steams to check flows and seepage areas. One company has biodegradable, fluorescent dyes that are still visible after dilution to 1 ppm in water.

Phosphorescent powders can be useful for identifying defective bags and other leaks in dust collectors. The powder is put into the dirty side of the collector, and it works its way through the system in a few minutes. After that time, the inside of the collector is checked with an ultraviolet light to find leakage points that are visible due to the glowing of the powder.

White smoke can be used to locate leaks in sewers, ducts, and other places that cannot be pressurized. Candles, bombs, or smoke generators with blowers produce the smoke that emerges at points of leakage.

Combustible or Toxic Leaks

The sensors that are available for the detection of toxic or combustible materials in the atmosphere are discussed in detail in Chapter 8. If a liquid is toxic or flammable, a wide variety of analyzers can be considered to detect if it is leaking out into the atmosphere. These instruments can use infrared (IR), colorimetric, or a dozen other principles of operation. They range from handheld monitors to continuous, permanently installed sensors.

Portable detector tube units provide measurements of low concentrations of gases and vapors. Most of the tubes have direct reading scales. The length of the discoloration in the tube provides the concentration reading. Some tubes contain chemicals that change color; these require a color comparison for the reading. Manufacturers have tubes for 100 or more specific analyses. Some of these tubes have been certified by the National Institute for Occupational Safety and Health.

For carbon monoxide, hydrogen sulfide, and a few other toxic materials, small badges and stickers (dosimeters) that change color as a function of total exposure are available.

Personnel Alarms Personal alarm units can provide considerable protection against toxic materials. These devices record or continuously integrate toxic levels to provide a time-weighted average (TWA) exposure number. An audible alarm occurs if a preset threshold limit value (TLV) is exceeded at any instant. Table 7.9b provides a summary of the typical alarm set points and inaccuracies of standard gas monitors.

TABLE 7.9b
*Capabilities of Pocket-Sized, Portable Toxic Gas Monitors**

	Alarm Setpoint	*Inaccuracy*
CO	200 ppm	±10 ppm FS; ±5 ppm in 0 to 200 range
H_2S	50 ppm	±10 ppm FS; ±3 ppm in 0 to 100 range
SO_2	20 ppm	±10 ppm FS; ±3 ppm in 0 to 100 range
NO_x	200 ppm	±10 ppm FS; ±5 ppm in 0 to 200 range
NO_2	20 ppm	±2 ppm FS

*Courtesy of Cole-Parmer Instrument Co.

TABLE 7.9c
*The Detection Limits of Portable Combustible Gas Detectors**

Compounds	*Formula*	*Sensitivity (ppm)*
Acetylene	C_2H_2	50
Alcohols	R—OH	50
Hydrogen sulfide	H_2S	5
Gasoline	—	1
Sulfur dioxide	SO_2	5
Vinyl chloride	C_2H_3Cl	5
Liquid hydrocarbons	—	50

*Courtesy of Cole-Parmer Instrument Co.

The most common type of combustible gas detector utilizes the catalytic combustion principle. A platinum wire filament (in a Wheatstone bridge circuit) is usually mounted in a diffusion-sensing head. Sulfur compounds and halides can prevent proper operation of this sensor. In processes where flammable gases or vapors can escape the technique serious consideration for intermittent and continuous monitoring must be warranted.

Table 7.9c lists the compounds that can be detected and the ppm sensitivity that can be expected of the measurement, using an intrinsically safe portable sensor, which is provided with a probe for focusing the detection to localized points of leaking. The unit is also suited for the detection of ammonia leaks.

Ultrasonic Detectors

Fluids escaping from openings generate sonic and ultrasonic waves. With the acoustic emission technique leaks can be detected from a distance. One vendor's explanation is that a 10 PSIG (68.9 kPa) gas leak might be detectable at 50 ft (15 m), but would be detected at only 10 ft (3 m) if the pressure were 1 PSIG (6.89 kPa). The method can be considered for the location of leakage from buried pipes and tanks. Although the technique has limitations for low-pressure gas problems, it can detect the gurgling of leaks from sewers and other low-pressure liquid lines.

© 2003 by Béla Lipták

TABLE 7.9d
Minimum Detectable Leak Rates of Some Common Gases Using Thermal Conductivity-Type Leak Detectors

	Minimum Detectable Leak Rate	
Gas	*cc/s*	*cu. ft/year*
Helium	0.00001	0.11
Hydrogen	0.000005	0.06
R12	0.000006	0.07
R1301	0.000006	0.07
R134(A)	0.000004	0.04
SF6	0.00001	0.11
CO_2	0.00003	0.34
CH_4	0.00002	0.23
Argon	0.00002	0.23

One successful application of the ultrasonic leak detector is the detection of the leaking of steam traps from a distance. These portable probe-type units can also detect the in-leakage of atmospheric air into vacuum equipment.

Thermal Conductivity Detectors Thermal conductivity leak detectors have cells that contain coils in bridge circuits. Heat dissipation increases with the concentration of the gas or gases in the sample, and the cooling effect changes coil resistance. The instrument will detect many different gases and has a wide dynamic range.

The portable, handheld leak detectors are provided with microprocessor-based intelligence. The unit is provided with a probe and a small fan that continuously draws in the gas that is present at the tip of the probe. The unit can be automatically zeroed (by pressing the re-zero button) based on the ambient air sample around the probe. Next the operator would identify the gas of interest and direct the probe to the probable point of leakage. The small fan then draws in a sample through the probe, and the sensor measures the resulting minute changes in thermal conductivity. Table 7.9d lists the detectable leak rates of some common gases.

Halogen Detectors

A halogen-bearing sample produces ionization current flow in a specially designed cell. The cell life of this design is shortened by high halogen concentrations. Although this instrument type is very valuable for checking refrigeration systems and for certain kinds of production testing, it is of less value in general industrial applications. One of its disadvantages is that the cell runs very hot, so these detectors cannot be used in a flammable atmosphere.

Electron-capture-type halogen leak detectors are the most sensitive (10^{-7} cm^3/s or even smaller) leak detectors available on the market (Figure 7.9e). Leak testing of reactors or other equipment is done by first evacuating the vessel and then filling it with a halogen gas, such as Freon-12 (dichlorodifluoremethane), and scanning the welds and other joints by a halogen sniffer probe.

When refrigeration systems are being leak-tested, the halogen is the working fluid inside the equipment. It should be noted that such halogens as Freon-12 (also called F-12, Refrigerant-12, or R-12) are not only destructive to the ozone layer around the Earth, but can also be fatal if inhaled. When exposed to high temperature, R-12 breaks down into chlorine, hydrogen, chloride, hydrogen fluoride, and phosgene gas, which is highly toxic.

The American Society for Testing and Materials Standard-E427 and the latest edition of the *Non-Destructive Testing Handbook* provide a large body of information on halogen tracer gases and leak testing. When vessels or heat exchangers are checked for leakage, they are usually filled with a pressurized mixture of air and R-12 gas. Table 7.9f provides information on the detectable leakage rates as a function of the richness of the air and R-12 gas mixture inside the equipment being tested.

Figure 7.9g illustrates how the sniffer probe might be used on a vessel wall in an open atmosphere. Figure 7.9h shows

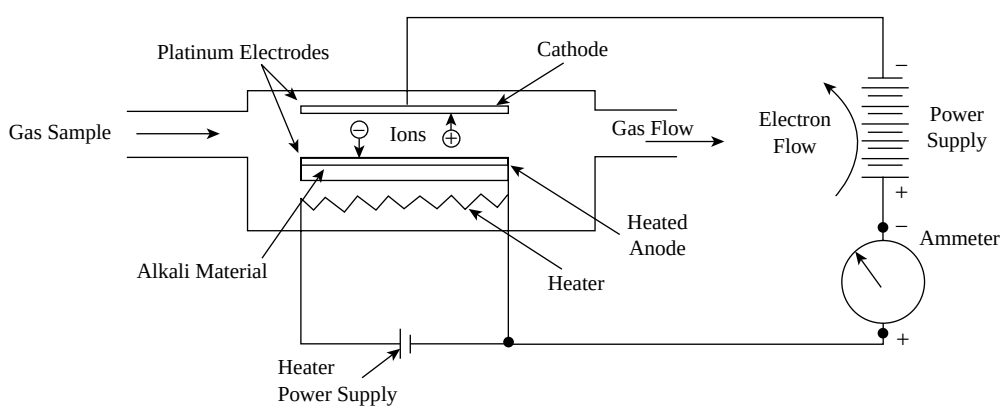

FIG 7.9e
Schematic diagram of a heated anode halogen vapor sensor.

© 2003 by Béla Lipták

TABLE 7.9f
Example of Percent R-12 Halogen Tracer Gas at 200 kPa Absolute (15 PSIG) to Detectable Leakage Rate, ***

	Leakage Rates			
% Tracer Gas	*Pa · m³/s*	*std · cm³/s*	*oz/yr*	*g/annum*
100	9×10^{-7}	9×10^{-6}	0.05	1.5
50	1.8×10^{-6}	1.8×10^{-5}	0.1	3
25	3.6×10^{-6}	3.6×10^{-5}	0.2	6
10	9×10^{-6}	9×10^{-5}	0.5	15
5	1.8×10^{-5}	1.8×10^{-4}	1.0	30
1	9×10^{-5}	9×10^{-4}	5.0	150
0.5	1.8×10^{-4}	1.8×10^{-3}	10.0	300

*Safety factor of 4.5 is included in these tracer gas concentrations. The assumed halogen leak detector sensitivity setting is 2×10^{-7} Pa · m³/s 2×10^{-6} std cm³/s.

**Courtesy of General Electric Co.

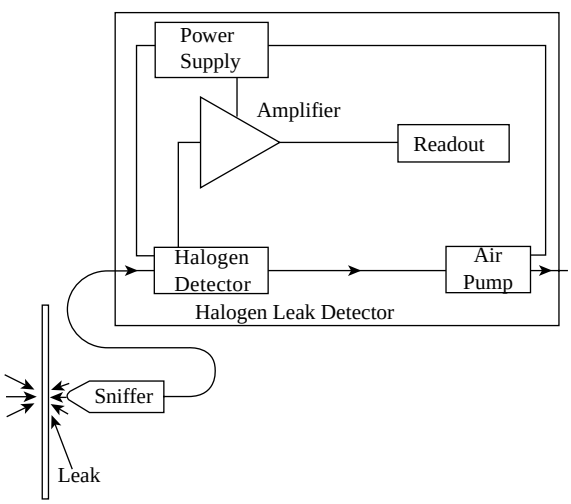

FIG 7.9g
Standard sniffer probe and halogen leak detector used with Method A halogen leak testing. (From ASTM-E427.)

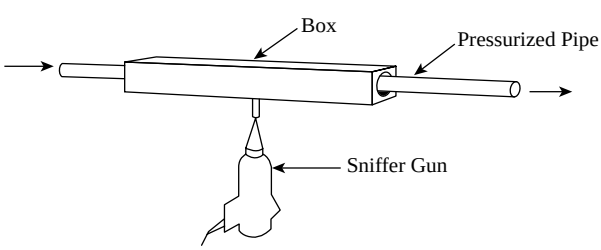

FIG 7.9h
Special adapter for testing lengths of tubing or pipe. (Courtesy of General Electric Co.)

an adapter that can be used when testing lengths of tubing or piping for leakage.

Other Techniques

Loss of Vacuum One obvious method of leak detection is to evacuate the space inside the test object and measure if the vacuum leaks out (pressure rises) over time. In order to do this, any one of the vacuum gauges described in Section 5.14 can be considered.

Thermography Thermography involves the detection of temperature differences by scanning in the IR region of the spectrum. The result is a thermal picture that is usually two colors, but sophisticated systems can convert the measurements into graded colors. If a hot fluid is escaping, it can be detected at a distance, above or below ground, or under insulation. Leaking valves and steam traps are easily located through the use of this technique.

Thermography has already seen many other applications that only involve thermal energy. It is valuable for the inspection of insulation and refractory materials. As a maintenance tool, it can be used to check heater tubes and electrical equipment.

Mass Spectrometer When used for leak detection, the mass spectrometer (see Chapter 8 for details) is usually made sensitive to helium. The helium acts as a tracer gas, inside or outside of the item that is being tested. These expensive instruments would be difficult to use in a chemical plant, but they have considerable value for production (assembly line) leak testing.

UNDERGROUND LEAKAGE DETECTION

Underground leaks at refineries, tank farms, gas stations, and industrial waste sites require monitoring. The monitored materials can be flammable hydrocarbons or toxic substances.

Level Monitoring

The monitoring systems can be based on the measurement of either liquids or vapors. In installations where the tanks are double-walled or where the tanks are installed in line sumps, the measurement of liquid levels can be sufficient (Figure 7.9i). The level sensor can be any detector that is capable of distinguishing between water and hydrocarbons. One such level detector is the thermal dispersion type (Figure 7.9j), which utilizes the differences between the thermal conductivities of liquids to differentiate between them. These sensors have already been described in Chapter 3.

Soil Detectors

When the tanks are not provided with double walls, it is common practice to detect the concentration of hydrocarbon vapors in the soil, instead of attempting to sense the presence

© 2003 by Béla Lipták

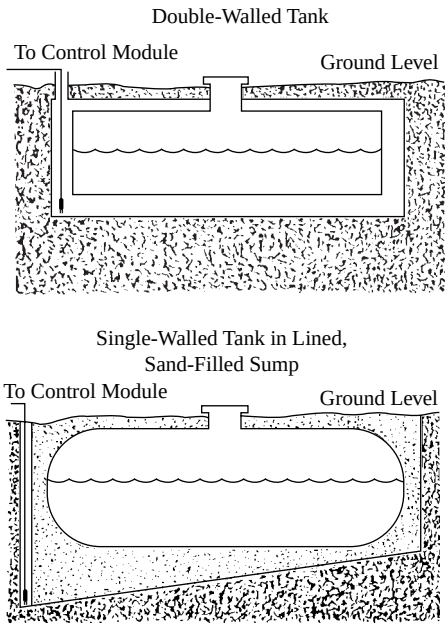

FIG 7.9i
Thermal dispersion-type level switches can be used to detect leakage in double-walled underground tank installations. (Courtesy of Fluid Components Inc.)

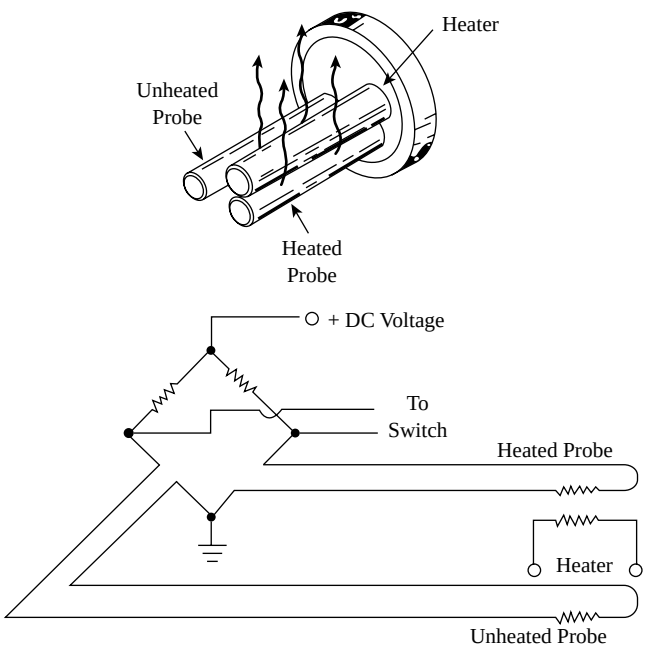

FIG 7.9j
Thermal conductivity-type level switch. (Courtesy of Fluid Components Inc.)

of hydrocarbon liquids. This is because vapors migrate about 50 times faster than liquids.[1] These sensors are usually set at gasoline concentrations of 0.5% by volume (or less) in air, which corresponds to 50% of the lower flammability limit for gasoline. Passive in-ground sensors can measure the concentration of hydrocarbon vapors in the soil. An intrinsically safe in-ground sensor—Van Der Waal—is illustrated in Figure 7.9k.

Aspirated Sensors Aspirated underground leak sensors pull a vacuum inside an underground probe that is provided with slots to allow in-leakage of vapors (Figure 7.9l). The slotted

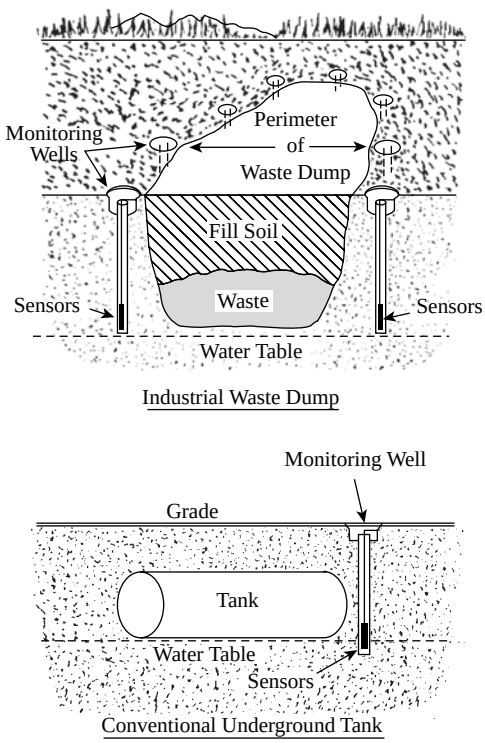

FIG 7.9k
Passive, in-ground sensors detect the concentration of hydrocarbon vapors in the soil.[2]

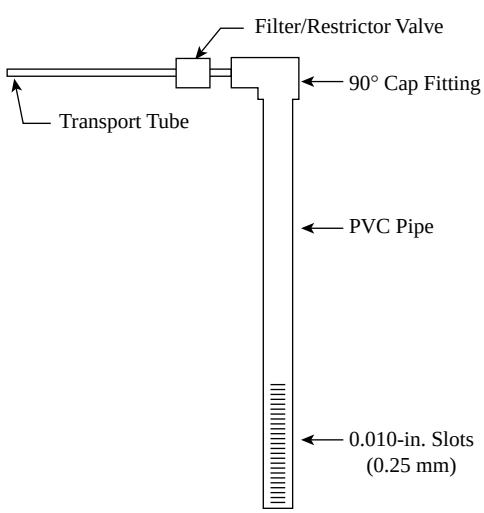

FIG 7.9l
The typical underground test probe.[1]

© 2003 by Béla Lipták

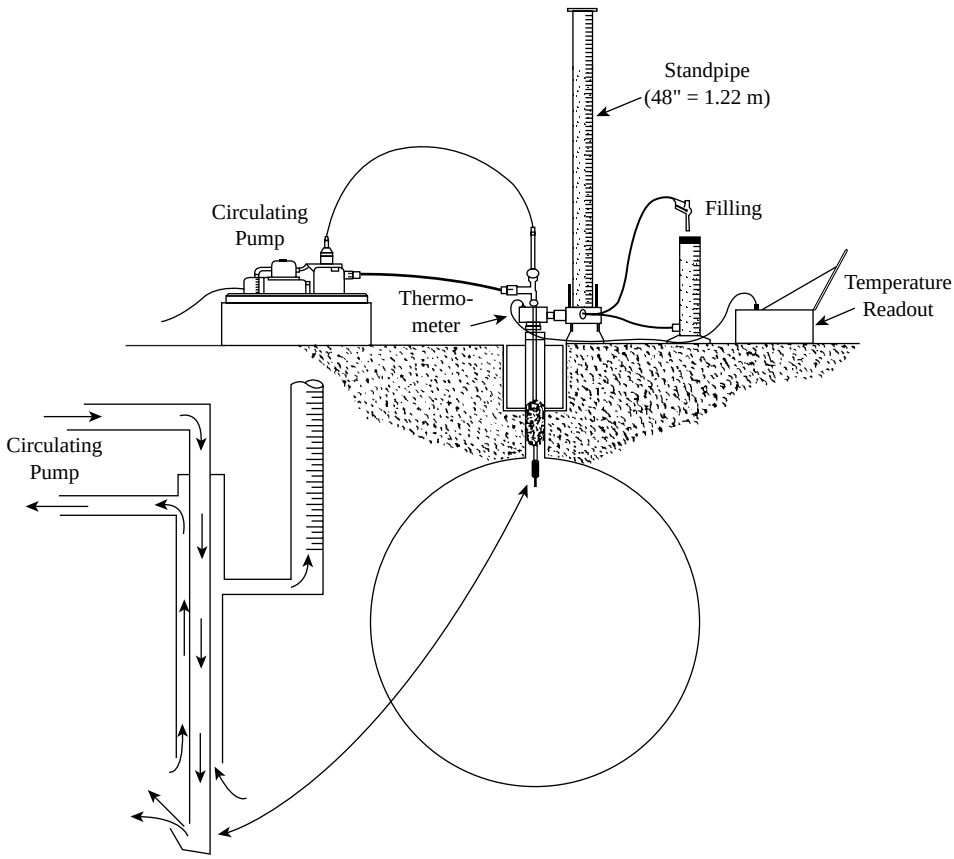

FIG 7.9m
Petro Tite test equipment. (Courtesy of Health Consultants.)

portion must never be fully covered by ground water, and the slots must be protected from plugging. The aspirated vapor sample tends to speed up the measurement, because the hydrocarbon vapors will migrate toward the vacuum created by the slotted probe.

Another advantage of this design is that the sensors can be located in an accessible and clean area. With multiple probes in the ground, continuous concentration profile measurements are possible. The sensor can be a bulk semiconductor vapor analyzer, a combustibles detector, or any of the other leak detectors discussed earlier.

Standpipe Detector Figure 7.9m shows the main components of a testing package that is capable of detecting minute leaks in underground tanks. Before the actual measurement is made, the ground water level is measured and the tank is pressurized to make it grow to reach its stable volume. Next, the tank contents are circulated, so that the temperature of the tank contents will be uniform within a fraction of a degree. Once the tank has been stabilized both in terms of its shape and the temperature of its contents, then the level in the standpipe of Figure 7.10k can signal even a minute leakage.

References

1. Hanselka, R., "Aspirated Vapor Sensing for Leak Detection," *Sensor*, September 1985.
2. Andersen, V., "Leak Detection Underground," *Measurements and Control*, February 1986.

Bibliography

Beagley, K., "Package Testing: Is Standardization on the Horizon?" *Pharmaceutical and Medical Packaging News*, March 1998.

Crump, J.G., "Alert Technologies," Instrumentation, Systems, and Automation Society Conference, Paper #91–0467, Anaheim, CA, 1991.

Elder, G., "Leak Testing: A Quality Assurance NDT Method," *ASTM Standardization News*, January 1995.

Franks, S., executive vice-president, T.M. Electronics, Inc., Worcester, MA, personal communication, October 27, 1998.

Hammock, A.A., "Operate Large Plants Safely," *Hydrocarbon Processing*, April 1979, pp. 263–270.

Hoffman, "Computerized Dry-Air Leak Testing for Process Control," *Medical Device and Diagnostic Industry*, January 1996.

International Organization for Standardization, International Standard ISO/DIS 11607, Geneva, Switzerland, 1995.

Kalplan, H. and Leftwich, R.F., "A Guide to Infrared Temperature Measurements," *Instruments and Control Systems*, January 1978, pp. 33–35.

© 2003 by Béla Lipták

"Leak Detection," panel discussion, Instrumentation, Systems, and Automation Society—91, Anaheim, CA, October 1991.

Mason, T.M., "Analytical Mass Spectrometer Calibration of Standard Leaks," *Instruments and Control Systems*, August 1970.

National Fire Protection Association, "Underground Leakage of Flammable and Combustible Fluids," NEPA-329, Quincy, MA, 1977.

Nielsen, C. and Powers, J., "Varied Uses Found in Chemical Plant for Infrared Thermography," *Chemical Processing*, December 1977, pp. 116–117.

Prellwitz, S.B., "Thermal Imaging Techniques Applied to Solving Steel Plant Problems," *Iron and Steel Engineer*, March 1976, pp. 59–63.

Schaeffer, J., "Use Flammable Vapor Sensors?" *Hydrocarbon Processing*, January 1980, pp. 211–220.

Sherlock, C.N., *Nondestructive Testing Handbook: Leak Testing*, Vol. 1, McMaster, R.C., Ed., Columbus, OH: American Society for Nondestructive Testing, 1982.

© 2003 by Béla Lipták

7.10 Linear and Angular Position Detection

J. BERGE (2003)

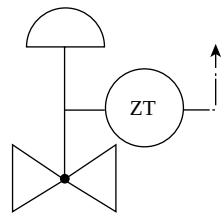

Flow Sheet Symbol

Technology:	A. Potentiometer B. Linear variable differential transformer C. Magnetostrictive D. Hall-effect E. Encoder
Linear/Rotary:	A. Rotary (Linear) B. Linear (Rotary) C. Rotary D. Linear E. Rotary (Linear)
Linearity:	A. 0.25% B. 0.25% C. 0.05% D. 1% E. 0.025%
Noncontact:	A. No B. Yes C. Yes D. Yes E. Yes
Costs:	A. $10 for potentiometer; $550 for smart transmitter; $600 for Fieldbus transmitter B. $1600 C. $400 D. $650 for smart, $700 for Fieldbus E. $500
Partial List of Suppliers:	Balluff (C) (www.balluf.com) Bourns (A) (www.bourns.com) BI Technologies (A) (www.bitechnologies.com) Betatronix (A) (www.betatronix.com) Daytronic (B) (www.daytronic.com) Durham Instruments (B) (www.disensors.com) Heidenhain (E) (www.heidenhain.com) Hoskin Instrumentation (B) (www.hoskin.ca) Leine & Linde (E) (www.leinelinde.se) Macro Sensors (B) (www.macrosensors.com) Novotechnik (A) (www.novotechnik.com) Pepperl+Fuchs (E) (www.pepperl-fuchs.com) Schaevitz (B, C) (www.schaevitz.com) Sentech (B) (www.sentechlvdt.com) Smar (D) (www.smar.com) Solartron Metrology (B) (www.solartron-metrology.com) Stegmann (E) (www.stegmann.com) Taylor Dynamics (E) (www.taylordynamics.com)

© 2003 by Béla Lipták

INTRODUCTION

Industrial applications of linear or angular position measurement include the detection of the position of valve stems/shafts, louvers, dampers, cylinders, etc. Position measurement is also used for inferential measurement of level and pressure as well as bulk-flow. Position is also measured by valve positioners, which provide position feedback in the more critical closed loop control systems.

Applications

In a level application, a wire connects a float to a drum that is fixed to the shaft of a multiturn rotary position sensor. As the level changes, the wire winds or unwinds from the drum and turns it, while its position sensor detects the rotary position. In pressure devices, a position sensor can be used to detect the movement of a bourdon tube or bellows element as the pressure changes. In case of detecting the bulk-flow on a conveyor, a pivot arm can skim the surface of the solids and a position sensor can measure the height of the moving pile.

There is a difference between absolute position sensors and sensors that detect only displacement. These incremental movement sensors are not position sensors. Position is detected for rectilinear (linear) straight-line motion and rotary (angular) turning of a shaft.

Position measurement requires a sensor and transmitter. For the harsh environments usually encountered in industrial applications, the sensors are usually integrated with the transmitter mounted in the field. However, sensors are also available as stand-alone units, having only some built-in signal conditioning, and utilizing a transmitter mounted separately, perhaps near the control room.

Mounting

Mounting of position sensing equipment usually requires some mechanical fabrication work, because for most installations there are no applicable standards for mounting. An exception is the case of control valves for which standards do exist for the detection of both linear and rotary motion. The rotary actuators usually adhere to the applicable standard, but most linear actuators in today's market do not comply with the standard. Therefore, the mounting bracket in most applications must be custom made.

In some linear position measurement applications, a rotary sensor is used and the rectilinear movement is converted into a quarter-turn motion using a lever. For this arrangement, special care must be taken when mounting and aligning the moving parts.

Many position-sensing technologies have a linearity of only about 1%, which is not impressive, when compared to the linearity of other physical property sensors. In most position measurement applications, repeatability matters more than linearity. This is because the error in valve position detection is corrected by the process control loop. What is important is not the linearity of the measurement, but the elimination of hysteresis or dead band. Therefore, repeatability matters most.

SENSOR TYPES

All modern position sensors convert the position into an electrically measurable signal such as resistance, voltage, current, inductance, pulses, or capacitance. Position sensors consist of one fixed and one moving part. The degree of separation between the two parts makes a big difference for the reliability of the sensor. If the two parts are in contact with each other, there is friction that causes wear and tear, reducing the life of the sensor. Also, when the parts are in contact, vibrations and shock are transmitted from the moving part to the more delicate stationary part of the sensor, causing premature failure.

Conversely, if the parts are not in contact, wear-and-tear is eliminated. This results in longer life and an operation that is more reliable. Although some sensing principles are noncontacting, the mechanical design of the sensor often integrates the two parts together such that friction can still occur and vibration can still be transmitted.

Potentiometric Sensors

The simplest and most widely used position sensor is the potentiometer. Potentiometers are often built into the devices, particularly when rotary motion is detected.

Linear potentiometers also exist, but the most often used industrial potentiometers are the single-turn rotary position sensors. In such devices, the moving part whose position is being detected turns the shaft. As the shaft is turned, a brush/wiper slides along a resistive element which can be made of a wound wire, conductive plastic, or other special material. The potentiometer has three terminals, one for each end of the resistive element and one for the brush. As the brush moves, the resistance between the center tap and end-terminal changes (Figure 7.10a).

Voltage and Current Methods The position can also be determined in a resistive or voltage mode. Voltage method is suitable for high resistance potentiometers and the current method is suitable for low resistance potentiometers. In the

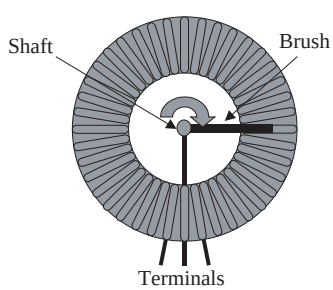

FIG. 7.10a
Wire-wound potentiometer.

© 2003 by Béla Lipták

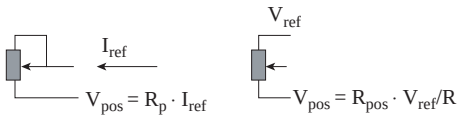

FIG. 7.10b
Transmitter with resistance measurement.

resistive mode, a current is sent to the center tap and to one of the end-terminals, while the resulting voltage drop, is measured by the transmitter. This drop is proportional with the position. In the voltage mode, the potentiometer is used as a voltage divider. A precision reference voltage is applied across the end terminals of the resistive element. The fraction of this voltage measured at the center tap is proportional to the position (Figure 7.10b).

If the resistance of the wires between the sensor and transmitter is significant in comparison with the resistance of the potentiometer, lead wire compensation should be used. If the resistance method is done using a temperature transmitter, this is typically taken care of. The voltage method requires the transmitter to provide the precision reference voltage.

The life span of brush/wiper type potentiometers is reduced by the wear and tear due to contact with the resistive material. The moving shaft of the potentiometer is connected to the fixed assembly, which transmits the vibration to cause wear between the two parts.

Advantages and Limitations Rotary potentiometers are best suited for angular position measurement. Quarter-turn actuators require only a gear to convert the motion for a full-turn potentiometer. Care must be taken to ensure that gears do not jam, gall, or cause excessive hysteresis. For linear motion, a lever is required when used with a rotary potentiometer (Figure 7.10c). This configuration can introduce some hysteresis due to mechanical defects.

A potentiometer has an infinite resolution. Linearity for a precision rotary potentiometer can be as good as 0.25%. However, due to linkages and gears, the linearity for the entire assembly usually is about 0.5 to 1%. The advantages of the potentiometric sensors include that they are simple and well understood. Troubleshooting can be done using a simple multimeter. It is possible to use a temperature transmitter with resistance input for the measurement, thus a special signal conditioner is not required (Figure 7.10d). Many position related devices already are shipped with built-in potentiometers. The potentiometer has essentially no power consumption; the transmitters just provide the resistance sensing current that need not be more than 0.1 mA.

Linear Variable Differential Transformer Type Sensors

A linear variable differential transformer (LVDT) is mostly used in linear motion applications and inside some pressure transmitters. It depends on an inductive principle for its operation. It is essentially a transformer with a primary winding and two counter-wound secondary coils. The circular windings are static, while a ferromagnetic core is moving at the center of the coils. The core is moved by the part or component whose position is being detected.

A sinusoidal excitation signal is applied to the primary coil and coupled to the secondary coils proportionally to the position of the core (Figure 7.10e). In the center-position, the coupling is symmetric; when the core is moved, the coupling becomes asymmetric. The differential signal of the two windings is proportional to the position.

Self-contained signal preconditioning converts the AC signal from the coil to DC in a DC-type LVDT. Because the LVDT operates inductively, there need not be any mechanical contact between the moving core and the coil structure. This eliminates friction and wear, and also provides virtually infinite life, if the core is mounted in such a way that it does not touch the coil assembly.

Hermetic sealing of the coil assembly is important for reliable operation. The inside sealing of the coil structure to the core must be nonmagnetic. LVDTs are available in lengths of up to 45 cm and with infinite resolution and with linearity of about 0.25%. The transmitter must provide the AC signal to drive the primary coil. Because the power consumption is relatively high, LVDT transmitters for position sensors typically require separate power. A rotary LVDT type sensor also exists. Changing between linear or rotary application requires change of the sensor.

Magnetostrictive Sensors

The magnetostrictive (a.k.a. magnetorestrictive) principle, which should not be confused with the giant magnetoresistive (GMR) sensor, utilizes a principle of operation similar to the Hall effect.

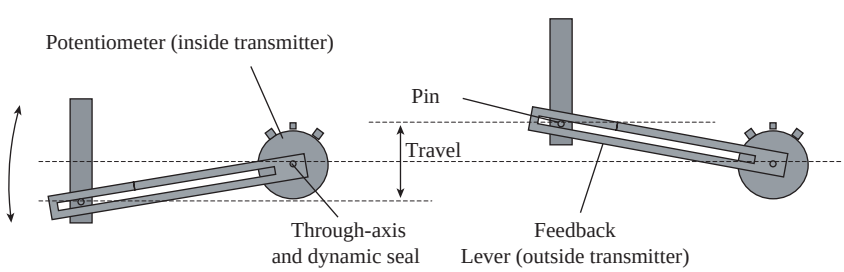

FIG. 7.10c
Lever converting rectilinear to rotary motion.

© 2003 by Béla Lipták



FIG. 7.10d
Industrial transmitter with resistance input.

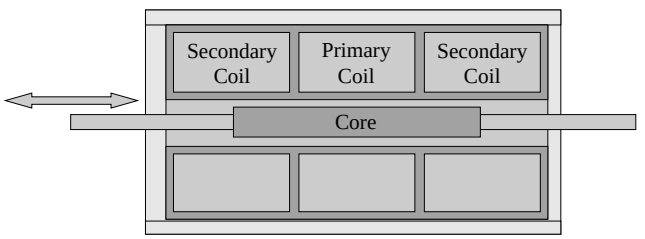

FIG. 7.10e
The operating principle of an LVDT type sensor.

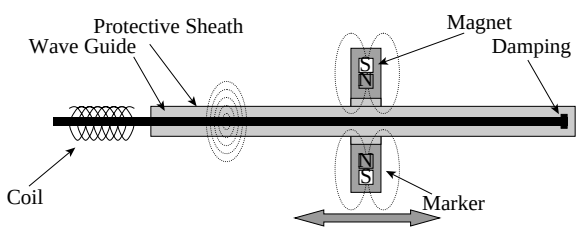

FIG. 7.10f
The operation of the magnetostrictive position sensor.

In the magnetostrictive sensor, a coil in the head-end starts the measuring cycle by periodically sending a trigger pulse down a wave-guide wire encased in a protective tube. A movable magnet assembly slides along the outside of the tube. The magnet assembly is moved by the part whose position is being detected. The wave-guide twist when the magnetic field accompanying the pulse down the wave-guide, intersects the magnetic field from the movable marker. The deformation is elastic and propagates in both directions along the wave-guide but is damped in the remote-end. The mechanical wave travels back down the wire to the head where it is detected by a reversal of the magnetostrictive effect, causing a stop pulse. The duration from the start pulse until the stop pulse is detected is proportional to the position of the magnet (Figure 7.10f).

The pulse duration is very short (in microseconds). Therefore, the signal conditioning circuit usually operates in an analogue mode where a pulse width modulation (PWM) signal is true throughout the duration from the start pulse to the stop pulse, having a pulse width proportional to the position (Figure 7.10g). Using a counter, which can operate at speeds of several megahertz, it is possible to time the duration without going through the analogue domain, keeping the measurement digital all the way.

There is no contact between the marker holding the permanent magnets and the other parts of the sensor. This means that there will be no friction or premature wear. Repeatability can be as good as 0.002%, and linearity as good as 0.05%. The magnetostrictive sensors can be linear and are able to detect movements as long as 3 m.

Because of the high counter frequency, the transmitters tend to have relatively high power consumption and are not suitable for two-wire transmitters. Rotary version is not available.

Hall Effect Sensors

In this sensor, a magnet assembly is moved by the part whose position is being detected. The magnet assembly can be constructed for either linear or rotary motion, but the Hall effect sensor remains the same. The linear magnet assembly consists of two opposing magnets side by side. The strength of the magnetic field along the magnet assembly varies at every point (Figure 7.10h). The Hall effect sensor sits between the two magnets roughly at the center when movement is at half the travel. For linear movement, the length of the magnet must exceed the expected travel.

As the magnet moves along the fixed sensor, the Hall effect sensor picks up the change in the field strength of the magnet (Figure 7.10i). The magnet assembly is designed in such a way as to strengthen the magnetic field between the magnets within the assembly and eliminate external influence.

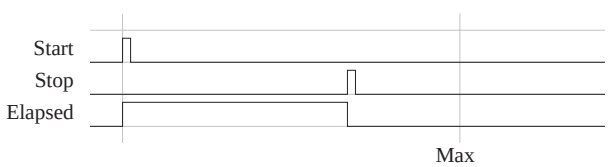

FIG. 7.10g
Using start and stop pulses to create a PWM.

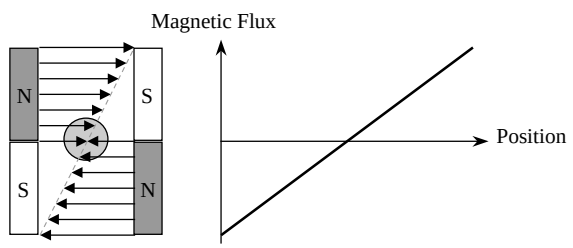

FIG. 7.10h
Magnet assembly for linear motion.

© 2003 by Béla Lipták

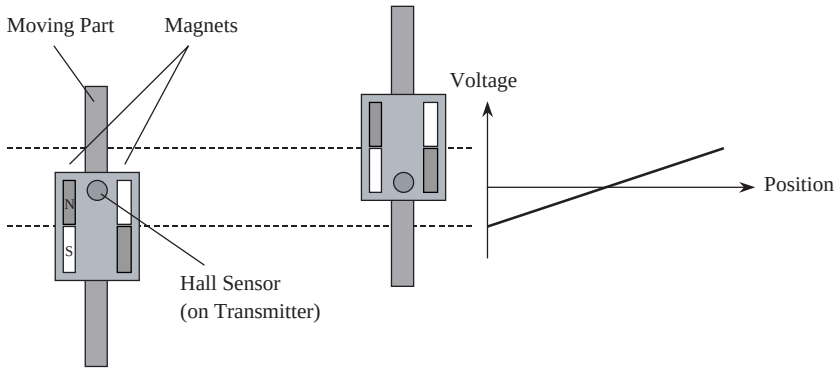

FIG. 7.10i
Operation of the Hall effect sensor.

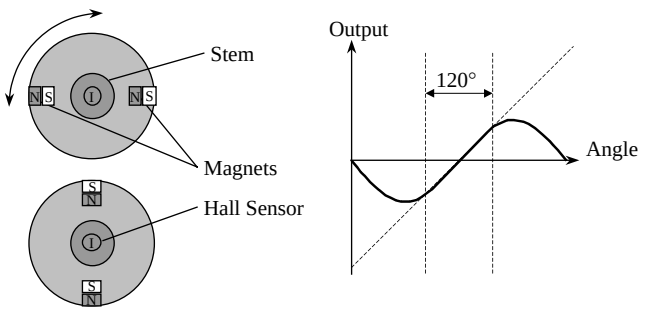

FIG. 7.10j
Rotary magnet assembly.

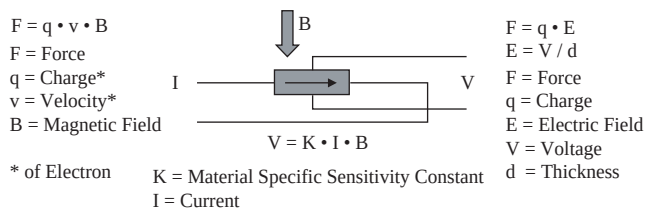

FIG. 7.10k
Hall effect principle.

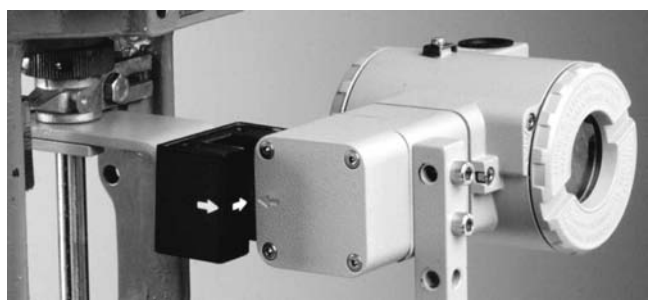

FIG. 7.10l
Industrial position transmitter.

Rotary Sensor For rotary, quarter-turn motion, a round magnet assembly with the two magnets in line is used. The magnetic flux picked up by the Hall sensor is a sinusoidal function of the angle (Figure 7.10j). The near linear part of the function (about 120°) is used for sensing, and complete linearization is done in software.

The Hall effect sensor is at the heart of this operating method. This is a simple semiconductor component protected by a rugged housing. A constant current is sent through the Hall element. As the electrons move through the magnetic field, they experience a force that piles the electrons to one side, creating a voltage. The potential in turn creates an electric field, which subsequently causes an opposing force (Figure 7.10k). At equilibrium, the forces balance. The potential is thus proportional to the strength of the magnetic field.

Transmitters Manufacturing long magnets is difficult. Therefore, this method is only used for rotary motion and for linear travel up to 100 mm, and it is suitable for most valves. The Hall effect sensor has low power consumption and is ideal for two-wire transmitters. The sensor has an infinite resolution. This principle is noncontacting, and the sensor does not cause any friction. There is also no wear-and-tear and life is lengthened. It is also less sensitive to vibration.

Since the magnet can be either linear or rotary, the same transmitter can be used for both angular and rectilinear movement without leaver linkages, etc. This is done simply by the selection of the magnet assembly. Since magnetic coupling is used, the Hall effect sensor can be completely encapsulated in a static seal. This is effective in harsh environments where both moisture and dirt are present (Figure 7.10l). Linearity, including that of the magnet, is about 1% and the repeatability is about 0.1%.

Encoder Type Sensor

Encoders are either absolute or incremental. Incremental encoders detect the distance moved and not the position; thus they are not really position sensors and are not covered here. Even with incremental encoders, it is possible to home the device (i.e., returned to the zero end position) every time it powers on.

Absolute encoders can be linear but are mostly rotary. In the rotary configuration, the encoder shaft is turned by the part whose position is being detected. The shaft then turns a

© 2003 by Béla Lipták

disk that has a radial pattern with a unique code provided for each of a finite number of distinct positions (Figure 7.10m).

For each bit or resolution, there is one track of code pattern. For example, for 12 bits of resolution, there are 12 tracks. The number of distinct positions is determined as 2^N, so for 12 bits/tracks there are 4096 distinct positions, which results in a resolution of better than 0.025%. On the back of the disk there are light emitting diodes for each track, allowing phototransistors to read the disk pattern. The disk track patterns are usually not in natural binary code but in gray code (Figure 7.10n). The advantage of the gray code is the elimination of large rollover as only one bit changes for each position step. This reduces the measurement uncertainty to only one count. The conversion from gray code to natural binary code is a simple logical operation that is performed in software.

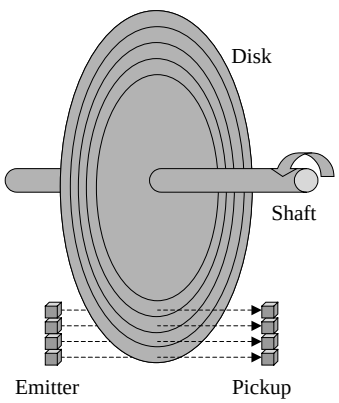

FIG. 7.10m
Encoder principle of operation.

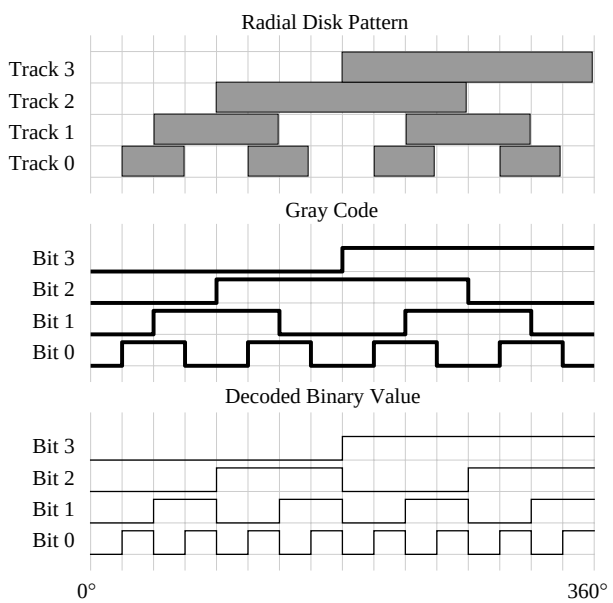

FIG. 7.10n
Gray encoding.

The encoder is a true digital sensor having no drift at all. It has a finite resolution depending on the number of tracks (bits) on the disk. Long linear motion measurement may use a wire on drum connected to a multiturn encoder. Changing from linear to rotary application requires a change of the sensor.

TRANSMITTER TECHNOLOGIES

To integrate the position measurement into the control system, the raw signal from the position sensor must be converted into a standardized analog or digital signal in a transmitter. The sensor may be an integral part of the transmitter, or a separate transmitter can be provided for the sensor. For some position detecting sensors, a temperature transmitter can be used to convert their low-level signals, such as ohms or millivolts from a potentiometer or preconditioned LVDT, into 4 to 20 mA. Most distributed control system/programmable logic controller packages are provided with low-level signal capability in their temperature-input module.

Other functions performed by the transmitter include range scaling, signal reversal (forward/backward, clockwise/counterclockwise), and calibration of sensor end points. Many transmitters are of a two-wire type, meaning that they are connected as part of the system using only two wires. On this pair of wires both the signal is transmitted and the power is also provided for the device.

Analog Transmitters

In a 4- to 20-mA DC transmitter, the output is 4 mA when the position is 0% of the set range, and the output is 20 mA when the position is 100% of the range. This range must be configured and it is important not to confuse range setting with calibration.

If the sensor is low power, the 4- to 20-mA transmitter can operate on a two-wire current loop. Two-wire operation means that the transmitter changes its current consumption proportional to the measurement and the power supply is the output signal. Since the signal never goes below 4 mA (or 3.6 mA during failure to be precise), there is always some current flow to power the device.

Many position-sensors require large quantities of power, and therefore need a third and possibly fourth wire to provide them with separate power supplies. Similarly, a 0- to 20-mA output requires a separate power supply. On the other hand, the two-wire operation reduces the amount of wiring required in a plant. A second advantage of current output is that the signal is not as easily distorted as a voltage signal.

Common voltage output ranges include 0 to 10, 1 to 5, and 0 to 5 V. For voltage output devices, the power supply must be provided separately over a third wire or by a separate pair of wires. A concern with a voltage output is that the signal is attenuated along the wire, resulting in a distorted

© 2003 by Béla Lipták

signal in the receiving end. Voltage output should therefore be used only for very short wire runs.

Fieldbus Transmitters

Intelligent devices have a built-in microprocessor for providing digital communication. In the past, several proprietary communication protocols existed. With the passing of time and with the desire for interoperability, the number of protocols used is dropping. In the field of process control, the leading technologies today are Foundation™ Fieldbus and Highway Addressable Remote Transducer (HART), while Profibus DP is widely used in the automation of machinery. Digital communication can be used by a handheld tool or asset management system for monitoring, configuration, diagnostics, calibration, and other maintenance functions. For details on configuration of intelligent devices, refer to Section 1.6. Digital transmission of the detected position requires no range, but it is important not to confuse range setting with calibration.

HART is a low speed, 1.2 kb/s, since digital communication is superimposed on a 4- to 20-mA two-wire current loop. Digital communication is primarily used for configuration and diagnostics from a handheld device, while the analog signal is still used for connection to controls and interlocks.

Foundation Fieldbus is digital and higher speed, 31.25 kb/s. It makes it possible to connect as many 16 bus powered devices per network into a multi-drop system, which reduces wiring costs. Digital communication is also used for closed loop control where control strategies typically are executed in the field devices themselves. The valve positioner that contains the valve position sensor may also serve as the process controller and also detect position limits, etc. Therefore, Foundation Fieldbus makes the control system architecture leaner by virtually eliminating controller hardware.

Bibliography

Berge, J., *Fieldbuses for Process Control: Engineering, Operation and Maintenance*, Instrumentation, Systems and Automation Society, Research Triangle Park, NC, 2002.

© 2003 by Béla Lipták

7.11 Machine Vision Technology

M. W. REED (2003)

Types:	PC-based frame grabbers, line scan and array devices, laser devices, optical encoders
Applications:	Bar coding, sorting, edge guiding, robotics, pattern recognition, gauging, defect monitoring, fiber optics, object location or position, dimensional measurement, counting discrete items on a conveyor line, pattern recognition and object sorting, flaw detection and quality monitoring
Software:	Simple commands to large algorithms
Environment:	Cameras enclosed in appropriate National Electrical Manufacturers Association enclosures if not self contained
Accuracy:	Superior to human inspection for moving parts or webs
Costs:	$100 for a single channel color analog channel; $1000 for fiber optic spectrophotometers. Online scanning systems cost $20,000 to $60,000
Partial list of Suppliers:	Banner Engineering Inc. (www.Bannerengineering.com) Byk-Gardner Inc. (www.bykgardner.com) CyberOptics, Inc. (www.Imagenation.com) Dalsa Inc. (www.Dalsa.com) DataColor International (www.colorite.com) Data Translation, Inc. (www.Datatranslation.com) DVT, Inc. (www.Dvtsensors.com) Hamamatsu Inc. (www.Hamamatsu.com) HunterLabs (www.hunterlab.com) Mahlo International (www.dfmg.com.tw/dhtml/%BCe%BCw/mahlo.htm) Minolta Inc. (www.dimage.minolta.com) Ocean Optics Inc. (www.oceanoptics.com) Omega Engineering (www.omega.com) Pulnix Sensors, Inc. (www.Pulnix.com) Sony Inc. (www.sel.sony.com)

INTRODUCTION

To define machine vision, we must define human vision. Human vision is the response of the eye and brain to light.[1] The cornea and lens of the eye image onto the retina, which contains rods and cones, which transmit a color image, through the optic nerve to the brain for processing. Anything that responds to and processes light can be thought of as having vision.

Machine vision is the artificial response of a device to spectral radiation The simplest devices are photocells. Machine vision also extends the human range of the visible spectrum, as in the case of IR absorption for identification of chemical bonds and for thermal imaging and UV spectroscopy or even x-ray inspection. A current challenge with x-ray vision is inspection at airports.

The Hubble Space Telescope, a project of the National Aeronautics and Space Administration, is an example of machine vision being used by humans to see things that otherwise could not be seen. Machine vision can be used by another machine to make decisions faster or more accurately and precisely than a human can. Machine vision systems may or may not use a computer. Many manufacturing operations such as counting, defect detection, edge following or displacement can be controlled by dedicated microprocessor or programmable logic controller-based machine vision. Pattern recognition may require a PC to

© 2003 by Béla Lipták

TABLE 7.11a
Machine Vision Cameras

*Type of Camera**	*Cost*	*Pixels*	*Output Format*	*Frame Grabber and Software Notes*
Linear PSD	$500–$1000	N/A	Analog	N/A
Linear PDA or CCD array (may have 3 arrays for RGB)	$1000–$10,000	128–8192; @8 to 12 bits/pixel	Serially transmitted pixel data	Custom software
Two-dimensional array monochrome or RGB, digital cameras	$1000–$10,000	Up to 4096 × 4096	Digital, USB2.0, IEEE 1394, Ethernet	RS-170, NTSC, PC-based with custom software
Two-dimensional array monochrome	$500–$5000	Up to 4096 × 4096	Analog or discrete	Camera internally; runs algorithms based on pixel counting
VCRs, analog video cameras	$100–$1000	N/A	Analog to USB	Desktop publishing

*May be ultraviolet, infrared, VIS, external lighting, or built in such as a laser beam.
PSD, photosensitive device; PDA, photodiode array; CCD, charge-coupled device; RGB red-green-blue.

store a reference image to be compared with the real time image.

Machine vision technology is the design and use of machine vision to solve problems. Machine vision may combine on-line defect monitors with shade monitoring (see Section 8.15) and then link this database to process control systems for quality control. Table 7.11a summarizes the range of devices.

LINEAR DIODE AND LINEAR CHARGE-COUPLED DEVICE ARRAYS

Linear arrays are integrated circuits making up line scan devices. Line scan diode arrays are available in any number of diode elements, but popular arrays use 256, 1024, 4096, or more pixels. By focusing an image on the array, an object can be viewed as a line, as shown in Figure 7.11b. This is valuable in finding flaws and in following edges. Such a device can be used to detect leading and trailing edges of passing objects with digital logic based on which pixel is illuminated by the reflected beam.

Another application for a linear array or photosensitive device (PSD) is light triangulation depicted in Figure 7.11c. Light triangulation can take the place of manual measurement of thickness or gaps as shown in Figure 7.11d. The span of the PSD data can also be used to generate a 4- to 20-mA analog output signal. Combining lenses, external lighting, and microprocessors yields a wide range of devices from analog and discrete linear gauges to spectrum analyzers where the array is used as the detector following a spectral grating.

Diode array spectrophotometers (see Section 8.15) replaced single wavelength detectors and filters to yield smaller and faster spectrophotometers used for conventional

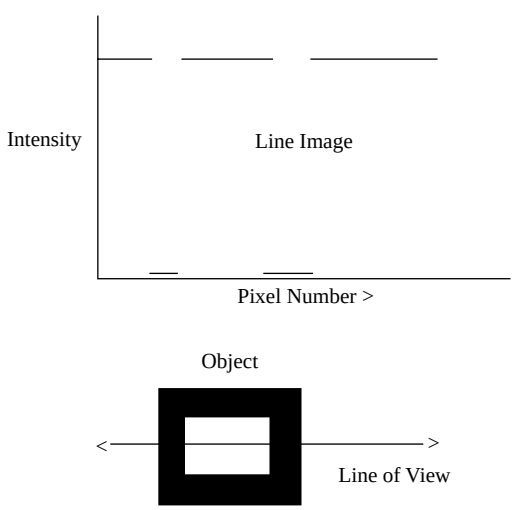

FIG. 7.11b
Linear array image.

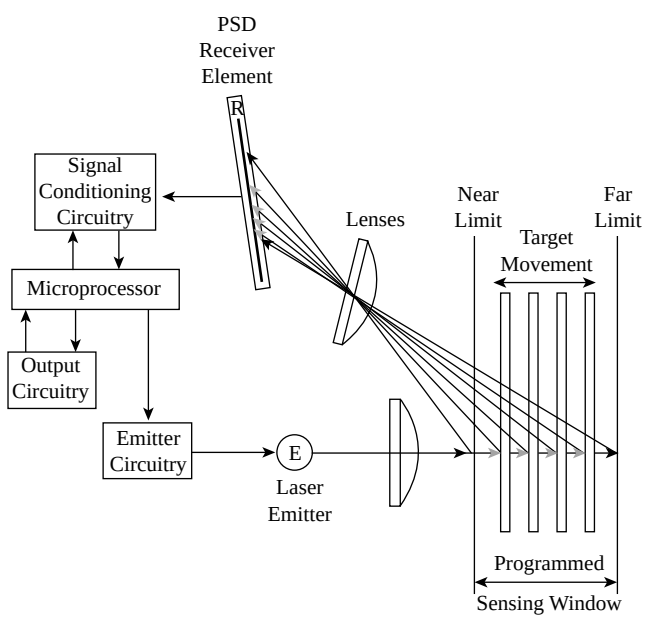

FIG. 7.11c
Optical triangulation. (Courtesy of Banner Engineering.)

© 2003 by Béla Lipták

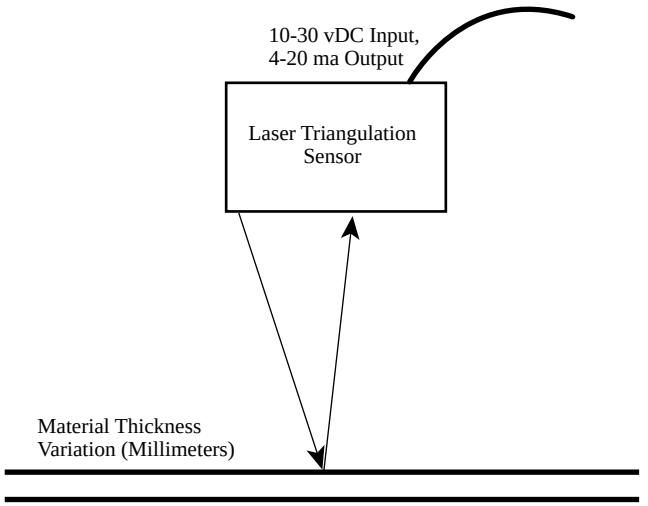

FIG. 7.11d
Optical thickness measurement.

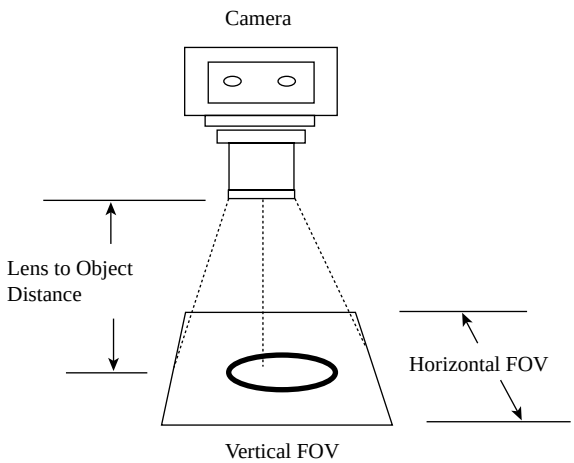

FIG. 7.11e
Camera/sensor used in pixel counting. (Courtesy of Banner Engineering.)

as well as fiber-optic light paths. A large number of pixels (diodes) are not needed for the linear array to be effective. Using lenses and effective lighting can be more practical for image processing than large numbers of pixels.

Example Project

A project to use line scan cameras for a real time color pattern inspection system was implemented by the Oak Ridge National Labs under funding from the American Textile Partnership[2] consortium. It was an in-line web pattern-inspection system consisting of a three-array line scan camera imaging a red-green-blue (RGB) input to be captured by a frame grabber (image processor) stored in tagged image file format (TIFF) and displayed on a graphics monitor. Each charge-coupled device (CCD) array had 2096 pixels with a thin-film filter on the array for each color. A frame was generated by combining scanned RGB lines at a speed of about 300 μs per line. Depending on the speed of the web, an image might have a resolution of 100 pixels per inch of web.

A single camera with ample lighting could image about 3 ft across the web. The complete system was controlled by a 32-bit Virsa Module Europa (VME) bus microcomputer which also recorded an encoder input for web position. Technology developed under this project was shared by a number of consortium members and vendors. Some of these vendors are listed in the list of suppliers at the beginning of this section. Algorithms to make decisions using the line array or the two-dimensional array images have been developed to run in firmware and software.

TWO-DIMENSIONAL CCD AND DIODE ARRAYS

One could take multiple time-lapsed images of line scan arrays, and with a linear encoder, map this into a two-dimensional picture of the field of view as discussed. This technique was used for many vision applications such as currency authentification. Instead of this, a two-dimensional array of CCD photodetectors is used to store all the pixels within a cycle time of about 1 ms. The familiar digital camera and the mini-camera are two good examples. The brighter the light source, the less the integration time for the arrays. The faster the image moves, the less time there is for taking the picture. Two-dimensional arrays may be more deserving of the name machine vision since the human eye contains arrays of rods and cones.

Gray-scale devices are used for pattern and defect recognition. One example is shown in Figure 7.11e, which is a two-dimensional array inspection device that does not transmit pixel data, but allows the user to program discrete outputs based on the filling and shading of pixels in the array. This is called *pixel counting*. Many simple inspection applications can be handled by this method. Thus, processes should be designed ahead of time to incorporate machine vision rather than machine vision being added later and having to compensate for variation in lighting, vibration, and excessive movement. The Automating Imaging Association[4] provides a good website for learning.

Analog Display Modes

Established at the time of the invention of television, National Television Standards Code (NTSC) and Phase Alternation Line (PAL)[4] are formats used in analog video for recording, playback, and storage. If one takes a magnifying lens and looks closely at a color monitor, it is seen that the screen is made up of thousands of dots of red, green, and blue phosphors. These RGB pixels are laid out and controlled by NTSC formats for displaying an output from an RGB transmitting device or recording. The video camera must transmit separate RGB signals for the horizontal and vertical sweeps of the display. This is to serve human vision rather than machine vision, but it is a necessary evil if a human is in the loop.

© 2003 by Béla Lipták

One finds that if all the red, green, and blue pixels in a group are lit, the human thinks this area of the screen is white.

NTSC and PAL data can be stored and transmitted digitally, but most display monitors are still analog devices requiring conversion of data to analog signals.

Serial Data Transmission

Despite digital imaging, display devices are still analog but these will eventually become totally digital with flat screen technology. Pixel data will still be the first level of data. Serial data transmission with a resolution of 8 bits gives 256 levels of an analog-to-digital (A/D) conversion of a diode's span, 10 bits gives 1024 levels, 12 bits gives 4096 levels, and so on up to 16 bits or more of A/D conversion.

This conversion is best done internally to the camera onboard so that high-speed serial data transmission is used to get the data into a PC. Since serial data is transmitted as bytes, a 16-bit data value for a pixel's gray scale range has to be transmitted in 28-bit bytes, and the driver program has to do the bit twiddling to render the string data in the correct form as numbers. Smaller cameras not needing frame grabbers are desirable to have the device external to a host for small space needs and robotics needs.

With the universal serial bus (USB)[5] protocol, the sending of 16-bit data values is done at about 12 Mb/s, but higher speeds are available up to 1 Mb/s. This type of design will be around for a while due to the cost advantage. Some diode arrays use a 12-bit pixel A/D and send data as high-/low-byte 16-bit words. At the low end, you might have 8-bit data being sent at 19.2 kb/s and at the high end you might have 12-bit data embedded in two 8-bit bytes being sent at 1 Gb/s. Firewire™ (IEEE1394)[6] Ethernet™ serial data takes us to 10 to 100 Gb/s.

Direct memory access is needed for high speed two-dimensional image processing. To use 32-bit data words containing RGB color information takes dedicated graphics boards running at over 1 GHz plus about 10 MB of memory per image. The key is to design your application so that the measurement is representative of the process time constants. A typical image can be scanned at 9600 dpi in gray scale. Lines are scanned at the same resolution resulting in a single page requiring about 10 MB in bit-map mode.

Vector Graphics Formats

A vector file creates an image as a collection of lines rather than as a pattern of individual pixels (bit-mapped graphics). Vector files are much easier to edit than bit-mapped graphics (objects can be individually selected, sized, moved, and otherwise manipulated) and are preferred for professional illustration purposes. Because they are scale and resolution independent, vector images can be enlarged without loss of sharpness.

Some vector file formats are Adobe Illustrator and portable document file (PDF). In order to print or view a PDF file, the user should use Adobe Acrobat Reader, which is freeware. The encapsulated PostScript file (EPS) format is a high-resolution graphic image stored in the PostScript language. The format allows users to transfer high-resolution graphics images between applications.

The images can also be sized without sacrificing quality. Bit-mapped graphics formats are images as a pattern of pixels (square dots) and are limited in resolution (sharpness) to the maximum resolution of the screen on which it is displayed. Bit-mapped images are inferior to vector graphics for most applications because they tend to have stair-stepping, which causes a staircase distortion due to the square shapes of the pixels. Enlarging bit-mapped images accentuates the distortion and jagged edges.

A bit-mapped graphic is stored as a group of bits that represent an image to be displayed on a computer screen. The image on the screen is composed of pixels (dots), similar to the dots in a photograph in a newspaper. Each bit in an image corresponds to one pixel in the screen, so the number of pixels that composes a monitor image determines the quality of the image. Because monitor screen resolution is only 72 dpi, and the resolution needed for printing is 266 dpi, a bit-mapped image limited to 72 dpi cannot be used to produce a quality image for printing.

COMPUTER GRAPHICS AND MACHINE VISION

Today's software graphics design packages offer resolution finer than the unaided human eye can detect. Zooming in eventually belies the discrete nature of the simulation. In the case of fashion and textile printing of art, it makes no economical sense to print an image at a resolution finer than a human can detect it. It does make sense if one is trying to inspect flaws in materials. It also makes sense to image in the spectrum outside of human vision. Infrared (IR) and x-ray vision systems extend human vision for the purpose of advanced military surveillance. This is true machine vision that humans are not allowed to see except by indirect methods such as the colorization of IR-temperature sensor data, or other image mapped data of a surface, such as with radar or ultrasonics.

References

1. Abrahamson, E.W. and Ostroy, S.E., *Molecular Processes in Vision*, Stroudsburg, PA: Hutchinson Ross Publishing Company, 1981.
2. American Textile Partnership™, *AMTEX/CAF Computer Assisted Fabric Evaluation Project* (referenced documents available to public under Oak Ridge National Laboratory reports ORNL/TM-13097; available from NTIS), 1995.
3. Automated Imaging Association, Ann Arbor, MI, www.Machinevisiononline.org.
4. Pratt, W.K., *Digital Image Processing*, New York: John Wiley & Sons, 1978.
5. Universal Serial Bus, www.usb.org.
6. Institute of Electrical and Electronics Engineers IEEE 1394 serial data protocol, New York, standards.ieee.org.

© 2003 by Béla Lipták

7.12 Metal Detectors

T. A. MAYER (1982) **B. G. LIPTÁK** (1995, 2003)

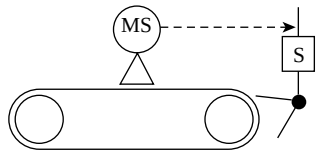

Flow Sheet Symbol

Applications:	Products in liquid, paste, or solid form on conveyors, in ducts, or in pipes can be monitored for the presence of metal objects. Units are also available to detect the location of underground pipes and cables, or for "beachcombing" for coins or jewelry.
Operating Temperature:	–40 to 120°F (–40 to 49°C)
Operating Pressure:	Atmospheric or vacuum
Materials of Construction:	Search head and electronics are housed in aluminum, plastic, or stainless steel
Search Head Window Sizes:	Highly variable. Typical belt detector window sizes range from 1 × 24 to 12 × 24 in. (2.5 × 61 to 30 × 61 cm)
Range of Detection:	1 to 12 in. (2.5 to 25 cm) for both ferrous and nonferrous metals. The smaller the search head window size and the shorter the range, the better will be the sensitivity.
Sensitivity:	The smallest diameter sphere of ferrous and nonferrous metals that can be detected is about 0.04 in. (1 mm). Distance from the search coil to the object is in direct proportion to the size of the object.
Costs:	Proximity limit switches start at $100. Search coils or search heads installed on belts and provided with interlocks for flap ejectors cost $2500 or more, depending on size, materials of construction, and complexity.
Partial List of Suppliers:	ABB (www.abb.com) Applied Electronics Inc. (www.appliedelectronics.com) Barringer Research Ltd. (www.barringer.com) C-Scope (www.cscope.co.uk) Ebringer Pruef (www.ebringergmbh.com) Essex Metal Detector (www.home.clara.net) Fisher Research Lab. (www.detection.com/Fisher) Foerster (www.foerstergroup.de) Guartel (www.guartel.com) Hyde Park Electronics (www.hpsensors.com) Industrial Magnetics Inc. (www.magnetics.com) Metal Detectors Inc. (www.metaldetectorsinc.com) Schiebel (www.schiebel.com) Vallon (www.vallon.de) Viking Metal Detectors (www.vikingdetectors.co.uk) Walker Scientific Inc. (www.walkerljdscientific.com) White Electronics (www.whiteselectronics.com) Whites Industrial Detectors (www.bostondetectors.com)

INTRODUCTION

In a metal detector, the magnetic circuit of the search coil is influenced by the differential conductance of the medium surrounding the coil. The greater the difference between the conductance of the medium and that of the minerals or metallic objects, the better the sensitivity of the detector. In case of metal detectors, sensitivity is expressed in terms of the size of the object to be detected and the distance from which it can be sensed. Some metal detectors are available that can

© 2003 by Béla Lipták

automatically correct for variations in the conductivity or other properties of the process material.

Some of the belt mounted sensors can be installed not only horizontally, but at any angle. They can also operate automatic devices (sorters), which will reject the detected metal particle.

DETECTOR TYPES

Types of detectors used include the transmit-receive (T/R) and the beat frequency oscillator (BFO). Both utilize the magnetic field of a search coil and low or very low frequencies of 1 kHz or lower.

The transmitter and receiver coils are located in the search head for T/R types. The transmitter coil, which is actually an antenna, sets up a magnetic field. This field is altered by the metallic objects as they pass the head. The resulting perturbation is sensed by the receiving coil, which then generates the audio and analog output.

For the BFO type, the search coil in the head is driven at the frequency of operation and an internal reference frequency signal is maintained. The operating frequency changes if a metallic object is near enough to the coil, and the change (compared with the reference frequency) is converted to the target identification signal.

Models can be battery-operated. Cost variations between models are due to the power output available from the driving amplifier, water and/or saltwater proofing, oscillator stability, and miscellaneous features. Users of metal detectors are capable, after considerable practice, to differentiate between metals and between objects of various sizes.

INSTALLATION ON CONVEYOR BELTS

Search coils generate high-frequency magnetic fields and can be used on conveyor belts that are made of nonmagnetic and nonconductive materials. The sensitivity of the coil is reduced if there are large metal objects (such as conveyor belt rollers) near the coil, but these effects can be zeroed out if these objects are stationary. When the conveyor belt is wide and the loading height is low, the search coil is often installed under the belt; if the loading is high, the coil sensitivity is increased by installing it above the belt (Figure 7.12a).

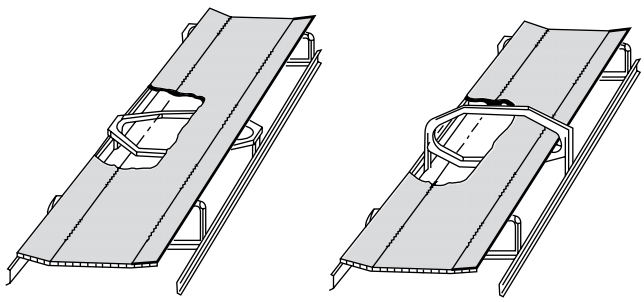

FIG. 7.12a
When the loading is low, the search coil is installed under the belt; when the loading is high, the coil is placed around the belt. (Courtesy of ABB subdivision: ASEA of Sweden.)

Figure 7.12b illustrates the operation of a metal detection control loop. A solenoid-operated flap is located at the end of the belt, and the product slides over the flap as long as no metal is detected in it. When metal is detected, a delay unit holds that information until the contaminated product reaches the end of the belt and opens the flap. As a result, the contaminated product falls into the reject bin. Such control loops are widely used in the food and plastics industry.

For the simpler task of determining the presence or absence of larger metallic objects, such as metal containers inside cartons that are travelling on conveyors, less expensive devices such as proximity detectors or limit switches can be used (see Section 7.14). These switches can actuate lights, buzzers, or reject flappers when the carton is not full (Figure 7.12c).

OTHER APPLICATIONS

A high sensitivity metal detector would be used to locate underground piping or cabling. These sensors are often used during new construction on existing sites or during expansions of existing facilities, when the locations of gas and

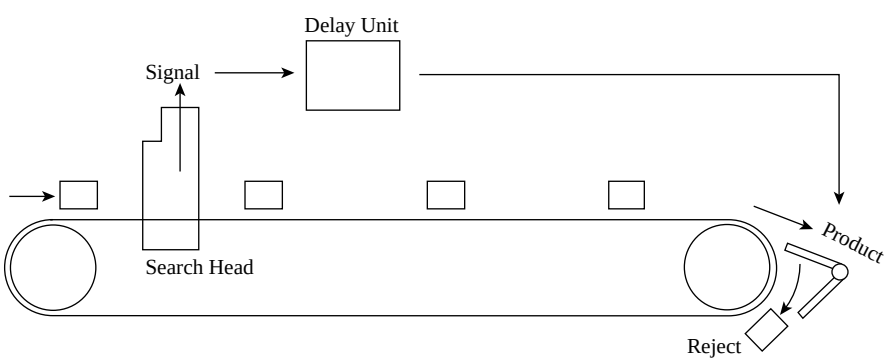

FIG. 7.12b
Product contaminated by metals can be automatically rejected. (Courtesy of Rank Cintel Ltd.)

© 2003 by Béla Lipták

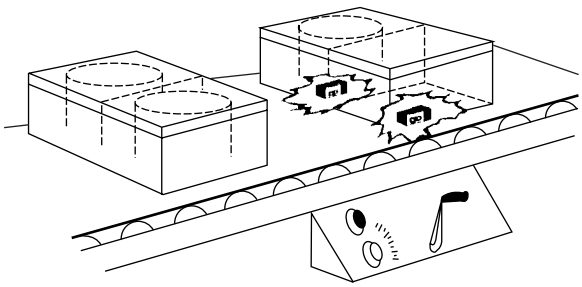

FIG. 7.12c
The presence or absence of metallic containers inside cartons can be detected by placing proximity limit switches under the conveyor belt.

oil pipelines or those of electric utility and telephone cables need to be determined. The highest sensitivity detectors, which are also the most expensive ones, are capable of detecting pipelines at 10 to 20 ft (3 to 6 m) or more below ground level.

In addition to the industrial applications, geologists use metal detectors to locate metal and mineral deposits, hobbyists use them for beachcombing while looking for coins and jewelry, and archeologists also use them for various scientific tasks. The features and capabilities of the nonindustrial, handheld metal detectors are summarized in Table 7.12d.

TABLE 7.12d
Capabilities of Hand-Held Metal Detectors

		Detection Range*	
Operating Mode	*Medium*	*Object*	*Distance, in. (cm)***
Transmitter-receiver	air	dime	3–6 (7.5–15)
	water	dime	4–7 (10–17.5)
	sand	dime	6–7 (15–17.5)
Transmit-receive, very low frequency	air	dime	6–8 (15–20)
	water	dime	6–8 (15–20)
	sand	dime	6–7 (15–17.5)
Beat frequency oscillator	air	dime	6–7 (15–17.5)
	water	dime	6–7 (15–17.5)
	sand	dime	6–7 (15–17.5)

*Range or distance to target depends on operator skill.
**Instrument sensitivity, i.e., the maximum distance at which a specific target can be detected, is determined by the size of the subject, the purity of the metal, the medium, and the output power of the unit.

Bibliography

Edmund Scientific, *Edmund Scientific Catalog*, Tonawanda, NY, latest edition.
Garrett, C.L., *Modern Metal Detectors*, Ram Publishing Co., 1991.
Industrial Magnetics Inc. (www.magnetics.com/metaldetection1.htm).
Metal Detectors Inc., Eugene, OR (www.metaldetectorsinc.com).
von Mueller, K., *Treasure Hunter's Manual*, New York: Dover, 1978.
White's Electronic, Inc., White's Electronics Corporation Catalog, Sweet Home, OR, latest edition.

© 2003 by Béla Lipták

7.13 Noise Sensors

H. C. ROBERTS (1972, 1982) **B. G. LIPTÁK** (1995, 2003)

Applications:	A. Noise/sound level measurement for Occupational Safety and Health Adiminstration (OSHA) and Department of Transportation (DOT) compliance B. Sound spectrum and acoustic emission analysis for nondestructive testing and safety applications
Designs:	For sound level measurements in air, microphones are used; for measurements in water, hydrophones are used
Ranges:	30 to 140 dB
Frequencies:	Usually from 20 to 20,000 Hz; special devices can be used to measure from 0.1 to 40,000 Hz
Inaccuracy:	Generally ±2 dB for OSHA and DOT compliance; up to ±0.5 dB in special designs
Operating Temperature and Relative Humidity:	Generally from 15 to 150°F (–9 to 65°C) at up to 95% relative humidity
Weighing of Sound Level Meters:	Different weights are applied at high-, middle-, and low-frequency decibel levels. As shown in Figure 7.13a, the international standard for acoustic weighing includes curve "A," which approximates the human ear; "B" gives combined high- and midfrequency decibels; and "C" reads all frequencies but gives better response at lower frequencies.
Costs:	Hearing protector earmuffs cost about $25. Acoustical calibrators cost about $200. A battery-operated sound level meter operating with "A" weighing and provided with acoustical calibrator costs about $700; a similar meter with "A, B, C" weighing costs about $900. Computerized installations of acoustic emission analyzers for nondestructive testing using piezoelectric sensors can cost up to $100,000.
Partial List of Suppliers:	Acoustic Measurement Services (A) (www.npl.co.uk) Acoustic Systems Inc. (A) (www.acousticsys.com) Cole-Parmer Instrument Co. (A) (www.coleparmer.com) Electro Voice Inc. (A) (www.electrovoice.com) Endevco (A, B) (www.endevco.com) Hewlett-Packard (B) (www.thenew.hp.com) Honeywell Inc. (B) (www.honeywell.com) IRD Mechanalysis Inc. (A) (www.entekird.com) Kulite Semiconductor Products Inc. (A) (www.kulite.com) Massa Corp. (A) (www.massa.com) Physical Acoustic Co. (B) (www.pacndt.com) Quest Electronics (A, B) (questelectronics.com) Triplett Corp. (A) (www.triplett.com) Vallen-Systeme Gmbh (B) (www.vallen.de)

NATURE OF THE MEASUREMENT

Acoustic noise (sound) is defined as an oscillation in an elastic medium, occurring within the frequency range to which the human ear is sensitive: that is, from approximately 20 to 20,000 cycles per second (Hz). The elastic medium is usually air, and occasionally a liquid such as water. Sound waves occur as pressure waves or as particle-velocity or particle-displacement waves; any of these three waveforms can be measured. In water, because of its

© 2003 by Béla Lipták

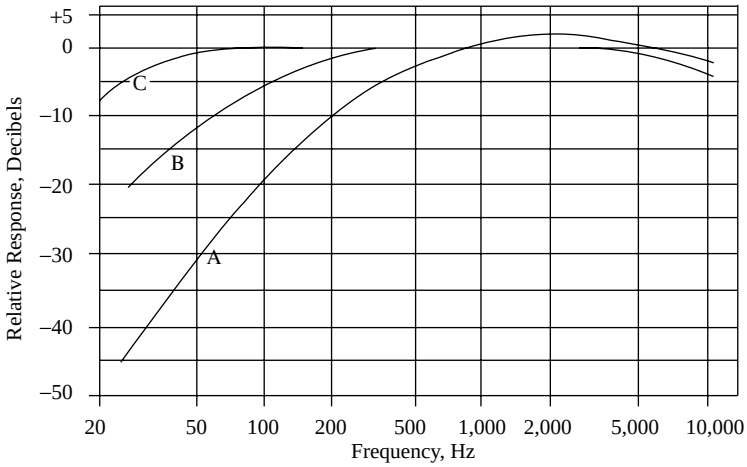

Permissible Noise Exposure	
Duration (Hours/Day)	Sound Level (dBA)
8	90
6	92
4	95
3	97
2	100
1½	102
1	105
½	110
¼ or Less	115

FIG. 7.13a

Curves A, B, and C describe the international standards for acoustical weighing networks, with curve A representing a response similar to the human ear.[1]

limited compressibility, only pressure waves are usually measured.

The pressure variations to be measured are small. At the threshold of audibility for the normal human ear, the root mean square value of pressure is about 20 μN/m^2. At the threshold of feeling for the normal ear, the pressure will be perhaps 200 N/m^2—10 million times as great, yet still only one one-thousandth of the atmospheric pressure. Consequently, the effect of steady pressure must be eliminated; the sensing device does not respond to it.

A scale of logarithmic units is used to describe sound pressure levels because of the extremely wide range of sound pressures that may be measured. In measuring the sound pressure, the measured pressure is compared with a standard pressure (that at the threshold of hearing, 20 μN/m^2) using the following formula:

$$SPL = 20 \log_{10}(P_m / P_{\text{ref}})\text{dB re } 20\ \mu N/M^2 \qquad \textbf{7.13(1)}$$

where SPL = sound pressure level, P_m = measured pressure, P_{ref} = reference pressure, and dB = the logarithmic unit, which describes sound levels.

TRANSDUCER PRINCIPLES

Conversion of pressure variations into an electrical output may be accomplished by several means; the most popular of these are inductive, dynamic, electrostatic, piezoelectric (or electrostrictive), and resistance variation.

The Inductive Principle

The inductive principle uses the variation of reluctance in a magnetic circuit, and iron reed (or a suspended iron armature) is made to vibrate by the sound waves and thus to change the air gap in a magnetic circuit. A coil of wire is placed around an element of that magnetic circuit, and an electromotive force appears at the terminals of the coil; its waveform

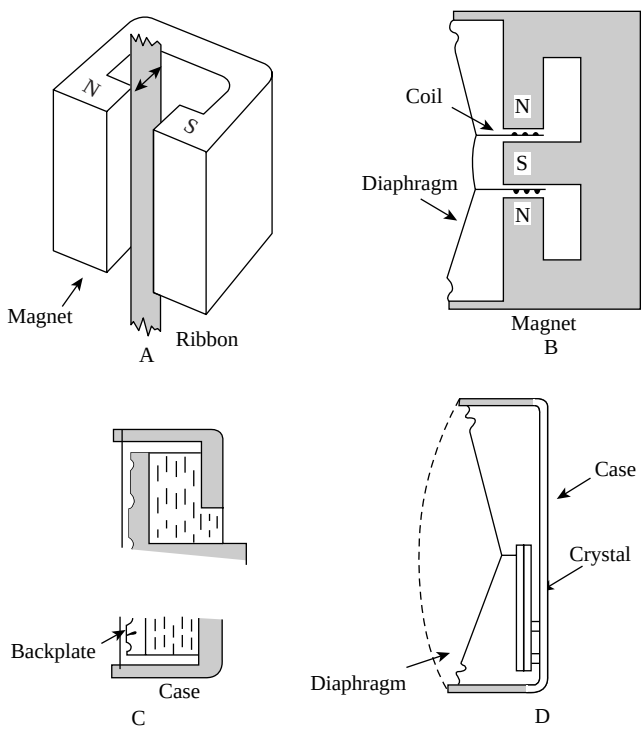

FIG. 7.13b

Construction of microphones.

represents the waveform of the sound. Inductive or magnetic microphones are used mostly for low-quality but high-level applications; they are not usually very precise devices.

The Moving-Conductor Principle

The moving-conductor principle—a conductor moving (and cutting lines of force) in a magnetic field—is used effectively in microphones. One form is the ribbon microphone. Here a very thin, lightweight metal ribbon is suspended in a magnetic field (see A in Figure 7.13b). Sound waves striking the ribbon

© 2003 by Béla Lipták

causes it to move, generating an electromotive force, which is fed to an amplifier input. The ribbon is extremely thin and light; it effectively follows the motion of the air particles. Its velocity is approximately equal to the velocity of the air particle motion, since the entire area of the ribbon is exposed to the sound waves and moves in unison with them.

Dynamic Microphones

Dynamic microphones also employ the moving-conductor principle; a lightweight diaphragm carries a coil of wire that moves within a magnetic field, as shown at B in Figure 7.13b. Sound waves strike the diaphragm; their pressure causes the coil to move, and an electromotive force is produced at the coil terminals and fed through a suitable transformer to an amplifier. These microphones are pressure-actuated, since the diaphragm (and the coil) moves in response to sound wave pressure.

Capacitor Microphones

Capacitor (condenser) microphones depend upon a fundamental principle in electricity: when some amount of electrical charge is held within a capacitor, the electrical potential between the condenser plates will change if the capacitance is changed. Thus, in a capacitor consisting of two plates, one of which is movable—as at C in Figure 7.13b—movement of one plate will change the capacitance and the potential between the plates will change in response. A change in air pressure, caused by sound waves, actuates the capacitor microphone. The initial electrical potential may be supplied from a separate source through a high resistance, or the electrical charge may be provided by making either the back-plate or the diaphragm of a material that has been given a permanent electrical charge (an electret).

The carrier-type capacitor microphone is structurally like that illustrated in C of Figure 7.13b, but its electrical circuitry is different. No polarizing potential is used. Instead, the capacitance of the microphone is made a part of an electrical oscillating circuit, so that a change in capacitance causes a change in frequency—the circuitry converts this change to the kind of output desired. This permits operation down to steady pressures (zero frequency), which is not possible with the usual circuitry.

Piezoelectric Microphone

The piezoelectric microphone depends on a specific behavior of some crystalline materials: a deformation of the crystal will cause electrical potentials to appear on the surfaces of the crystal. The magnitude of the potential is in proportion to the force that is causing the deformation. The assembly shown in diagram D of Figure 7.13b indicates a typical construction; a diaphragm receives the sound waves and applies their force to the crystal element, causing it to bend. The crystal element is usually an assembly of thin slices called a bi-morph; this is an efficient and convenient form for the application.

In years past, most piezoelectric microphones used crystal elements made of Rochelle salt or of ammonium dihydrogen phosphate. Recently, various ceramic products have been developed with suitable characteristics for this use; they may be called electrostrictive rather than piezoelectric, but they serve the same function.

MICROPHONE TYPES

The most widely used microphone is the resistive device called the carbon telephone transmitter. Its characteristics make it unsuitable for most quantitative uses, but it is excellent for voice communication.

A useful way of classifying microphones is according to type of response: the instrument can be actuated either by the velocity, displacement, or pressure of the sound waves. The distinction is not always entirely clear-cut.

Ribbon Microphone

The ribbon microphone (in its usual form) responds to velocity; the moving ribbon is light, flexible, and easily moved. Because of this, it needs no added mechanical damping and its motion is very nearly identical with the air particle motion; its electrical output is also proportional to velocity. But a ribbon microphone can be made into a pressure microphone. The sound waves may be made to pass through a pipe before they reach the ribbon, and this pipe may be so damped that it acts as an acoustical resistance, controlling microphone characteristics. This permits some desirable control over frequency sensitivity. The usual form of ribbon microphones does not offer this control. Its damping is a result of its construction, and it is quite insensitive to even large changes in steady pressure.

Diaphragm Microphone

Microphones that employ elastic diaphragms are nearly all pressure types. This is becasue the velocity of the coil motion (in the dynamic microphone), the diaphragm displacement (for the condenser microphone), and the crystal deformation (in the piezoelectric) are all in proportion to the applied force—the instantaneous sound pressure. For this to be true, the microphone structure must be properly designed, the elastic deformations must be linear, and there must be suitable damping.

Air leakage from the interior of the microphone to the atmosphere is usually provided for damping. This leakage occurs through small tubes that add the proper acoustical resistance. Damping in the condenser microphone is difficult because the diaphragm is very close to the back-plate; grooves in the back-plate solve this problem.

Special Microphones

Pressure-gradient microphones are sensitive to the difference in pressure between two points separated by a finite distance; thus, they provide a form of velocity response. They are

© 2003 by Béla Lipták

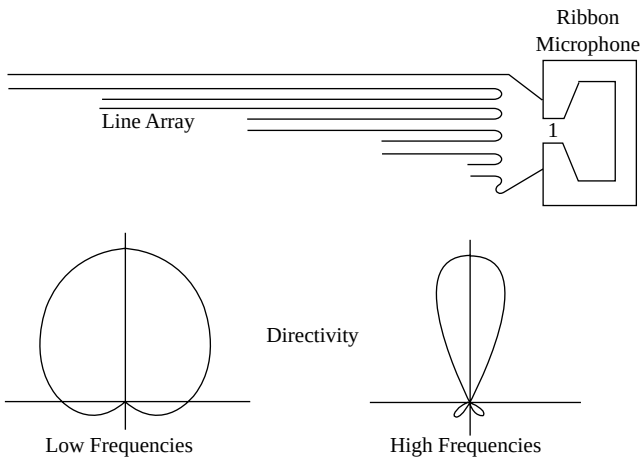

FIG. 7.13c
A line microphone.

usually special purpose devices and can be given some very specific directional characteristics.

Parabolic Reflector Microphone When extremely high directivity is required, other special forms are available. The most popular of these are the parabolic reflector microphone and the line-type microphone. The line microphone uses an array of pickup tubes of varying length; the sound that reaches the microphone through these tubes adds vectorially, making high directivity possible, though uniformity of frequency response suffers. In Figure 7.13c, the array is sketched and the general type of frequency response is shown. Microphones of these two types are often called wave microphones.

Special Purpose and Ultrasonic Units Some special purpose, sound measuring devices have been developed that are sensitive to the energy of sound but not to delineating waveform. Examples include the hot-wire microphone, the Lindval glow microphone, and the Rayleigh disk. They do not seem to be applicable, in general, to industrial use. The Rayleigh disk, however, is still a practical device for calibration.

Ultrasonic microphones form a special class. They respond only to frequencies above the hearing range: about 25,000 to 45,000 Hz. They are widely used in remote control devices, gas leak detectors, guidance devices (as for the blind), and the like. They are usually piezoelectric units; the crystal may be made resonant at some frequency.

MICROPHONE CHARACTERISTICS

In selecting a microphone, the user is seldom particularly interested in the physical principles involved in its construction. It is the microphone's operating characteristics that are of more interest. Table 7.13d provides data on the characteristics of the various microphone designs.

Sound Sensitivity, Incidence, and Direction

The sensitivity of microphones can be given in volts per unit of pressure; a typical condenser microphone might produce about 10 mV for a sound pressure input of 1 N/m^2. Trade practice often describes microphone sensitivities in terms of

TABLE 7.13d
A User's Classification of Microphones

Type of Microphone	*Frequency Response Range, Hz*	*Output, dB**	*Typical Characteristics*	*Typical Use*
Carbon telephone transmitter	300–4,000 (useful range)	–25 to –45	Inexpensive, with high output in the speech frequency range	Telephone
Capacitor microphone	12–15,000	–48	Extremely stable, wide, and flat frequency response	Measurement of sound level
Carrier-type capacitor microphone	0.1–20,000	Depends on auxiliary unit	Widest possible frequency response; uses auxiliary electronics, with any of several microphone units	Measurement of sound in extreme conditions
Crystal microphone	30–12,000	–65	Good frequency response, usually semicardioid pattern; often temperature sensitive	Public address, recording
Cardioid microphone	20–12,000	–80	Good frequency response, cardioid or "unidirectional" pattern	Public address, recording, etc.
Ribbon microphone	20–15,000	–85	Good frequency response; can be used either as pressure or velocity type	Live performance, recording
Wave microphone	80–8,000	–80	Can be highly directional, because of construction	Broadcasting, special uses

* Microphone sensitivity in terms of 0 dB = 1 V/dyne/$cm.^2$

© 2003 by Béla Lipták

decibels referred to 1 V/dyne/cm^2. (The example just given would be 40 dB.) One dyne per square centimeter is about 74 dB on the usual scale of sound pressure levels. Amplification is always needed; amplifier characteristics must be suited to the microphone characteristics.

The direction from which sound waves reach a microphone usually has some effect on the output produced. A pressure microphone should measure pressure at a point; the smaller the microphone size, the nearer the approach to this condition. At high frequencies, an error may appear, if, for example, the diameter of the microphone diaphragm is equal to one wavelength of the sound. A series of waves striking the diaphragm at nearly grazing incidence may cause almost no net effect—a far different result from that produced by the same series of waves striking normal to the surface (Figure 7.13e) Typically, sound in a room is directed diffusely; it comes from all directions. If high accuracy is required at frequencies above about 10,000 Hz, this must be considered.

In general, microphones are classified as omnidirectional, unidirectional, or bidirectional. These classifications are only approximately accurate, but the terms are useful guides. An omnidirectional microphone (see A in Figure 7.13f) displays early uniform sensitivity to sound coming from all directions; one would probably use such a microphone for measuring sound levels in a room. Bidirectional response (see B in Figure 7.13f) is of great value in such instances as broadcasting and live stage performances. Ribbon microphones provide bidirectional response if both sides of the ribbon are exposed to the sound. If only one side is exposed, the response pattern becomes cardioidal, as shown in C of Figure 7.13f.

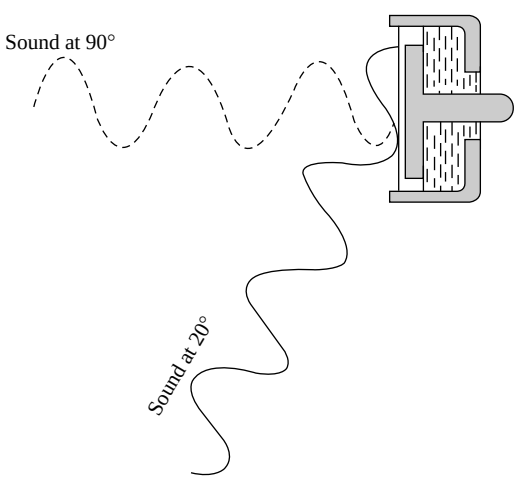

FIG. 7.13e
Normal incidence versus grazing incidence for sound waves.

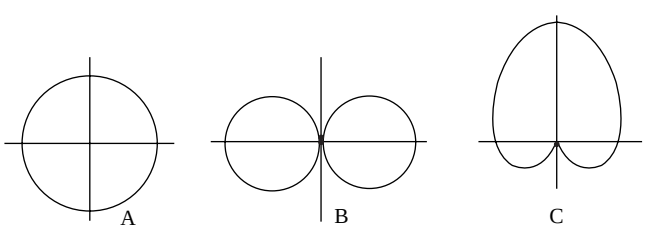

FIG. 7.13f
Typical directivity patterns for microphones.

Frequency and Amplitude Ranges

The possible frequency range of a microphone depends on both its operating principle and construction. Nearly all modern microphones are quite flat over the usual range of the human ear (see Table 7.13d). Dynamic microphones and diaphragm-type crystal microphones depend on good design and construction, including proper damping, to ensure uniform response with no noticeable resonance peaks. Condenser microphones have a much smaller moving mass, as do ribbon microphones, and have fewer mechanical problems; their frequency limitations are more likely to appear in the electronics associated with them. Manufacturers' data usually describe these factors adequately.

The amplitude range, which a particular microphone can accept, depends on its construction; pressures that are too high can cause mechanical damage. Most microphones can tolerate the maximum acceptable to the human ear—perhaps a 140-dB sound-pressure level—but special forms are available that can be used successfully at much higher levels.

Hydrophones

For use under water, special forms are available. These are microphone units installed in strong housings arranged in such a way that the vibratory components of pressure may enter, but because of the depth of immersion, the steady component does not. These are usually called hydrophones. They require special cables and often special electronics.

With modern microphones, the stability of microphones—the constancy of the rates of output to input at all frequencies and under all conditions—is usually more dependent on environmental considerations than on elapsed time. Figure 7.13a lists the permissible noise exposures and describes the international standards for acoustical weighing networks.

ENVIRONMENTAL CONSIDERATIONS

Microphones may be exposed to extremes of temperature and humidity, mechanical shock, magnetic fields, and other factors. Any of these can affect sensitivity and frequency response, either on a temporary or a permanent basis.

Protection from mechanical damage is obviously desirable; the rather delicate mechanical suspensions can be damaged, crystals cracked, etc. Dust can clog the equalizing openings between the interior of the microphone and the outside, thus impairing the frequency response. Reasonable care should be taken to protect this moderately delicate equipment.

© 2003 by Béla Lipták

Dynamic microphones contain permanent magnets; exposure to strong magnetic fields could weaken these and change the sensitivity of the microphone. If the microphone is used in magnetic fields, there could be noise pickup by either the microphone or its cable. The same is true for ribbon microphones; they may be even more vulnerable to pickup of AC. AC fields should be avoided in the use of any such equipment.

Crystal microphones are not usually greatly affected by temperature within reasonable ranges, though this was not true of earlier models. They can, however, pick up noise from electrical fields.

Condenser microphones are usually extremely stable for most conditions, but moisture can seriously impair their response. They contain high-quality insulating materials, but they are not entirely unaffected by humidity. Their electronic auxiliaries also may be vulnerable to environmental effects.

It is always possible that microphone characteristics may change. However, modern microphones are extremely good. The manufacturer's information is usually a reliable guide.

One environmental effect—wind—is extremely troublesome. Wind produces microphone noise, which can be reduced by windscreens installed on the microphone.

CALIBRATION

Calibration at appropriate intervals will detect, and perhaps correct, most changes that occur over periods of time. Microphones may be supplied with nominal sensitivity values, but microphones intended for measurement are usually supplied with detailed calibration data. The electronic equipment used with the microphone becomes a part of the calibrated system.

Precision calibration of microphones may be done by several procedures; this is beyond the scope of this discussion. The user is interested in day-to-day checks to establish that no perceptible change has occurred. Some manufacturers provide precision calibration for their units at the necessary intervals.

Portable calibration devices are available from most suppliers of microphones. They are usually small sound sources that can be used on individual microphones; it is important that the correct procedure be used. Again, the recommendation of the manufacturer should be followed.

Reference

1. Lyons, D.W. and McKee, E.F., "Measurement of Acoustical Pollution," *InTech,* November 1970.

Bibliography

Anderson, J.S., *Noise: Its Measurement, Analysis, Rating and Control,* Aldershot, U.K.: Avebury Technical, 1993.

Beranek, L.L., *Acoustics,* New York: McGraw-Hill, 1954.

Earshen, J.J., "Second Generation Personal Noise Dosimeter," *Sound and Vibration,* May 1980.

Gaylord, M.L., *Electroacoustics: Microphones, Earphones and Loudspeakers,* New York: Elsevier, 1971.

Harris, C.M., *Handbook of Acoustical Measurements and Noise Control,* New York: McGraw-Hill, 1991.

Olson, H.F., *Acoustical Engineering,* Princeton, NJ: Van Nostrand, 1957.

Redl, W.A., *Noise and Vibration Measurements,* Reston, VA: American Society of Civil Engineers, 1985.

Tempest, W., *The Noise Handbook,* New York: Academic Press, 1997.

Tremaine, H.M., *Audio Cyclopedia,* Indianapolis: Howard W. Sams and Co., 1973.

Wilson, C.E., *Noise Control, Measurement, Analysis, and Control of Sound and Vibration,* New York: HarperCollins Publishers, 1989.

© 2003 by Béla Lipták

7.14 Proximity Sensors and Limit Switches

A. BRODGESELL (1969) **M. F. HORDESKI** (1982)
B. G. LIPTÁK (1995, 2003)

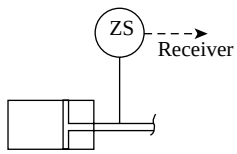

Flow Sheet Symbol

Types:

A. Capacitance
A1. Switch
A2. Dimensional or thickness sensor
B.
B1. Inductive
B2. Magnetic, which includes the Hall effect, the variable reluctance, and the magnetically actuated reed switch types
C. Linear variable differential transformer (LVDT) and variable resistor
D. Mechanical and electromechanical limit switches
E. Optical, photoelectric, or fiber-optic
E1. Switch
E2. Laser-based distance, dimension, or thickness sensor
F. Pneumatic and air gauging
F1. Air gap sensors
F2. Dimension sensors
G. Ultrasonic
G1. Echo-type switch
G2. Displacement transducer

Operating Temperatures:

Typically from –50 to 150°F (–46 to 66°C). The temperature range of high-precision devices can be more restricted, while specialized sensors can take wider ranges. Mechanical limit switches operate from –25 to 250°F (–32 to 121°C)

Objects Detected:

A, C, D, F, G. Metallic and nonmetallic
B. Metallic, ferrous, or nonferrous
E. Opaque or reflective; fiber-optic version can detect objects under 0.1 mm diameter

Detection Ranges:

A. 0.1 to 1.0 in. (3 to 25 mm)
B. 0.1 to 2 in. (2 to 50 mm)
C. Wide
D. Physical contact
E. Up to 200 ft (60 m)
F. Microinches to inches
G. 2 in. to 90 ft (50 mm to 30 m)

Costs:

Pneumatic gap sensors can be obtained for about $20. Most proximity switches cost from $50 to $150; LVDT transducers cost from $200 to $1200; ultrasonic point detector switches cost from $300 to $600; noncontact proximity transmitters for dimensional measurement of displacement and thickness cost from under $1000 to $3000 or more; laser types with resolutions of 1 μm cost more. For the cost of linear and angular position detectors, refer to Section 7.10.

Partial List of Suppliers:

ADE Corp. (A2, B2, G2) (www.ade.com)
Allen Bradley (B1, D, E1) (www.ab.com/sensors/products/limit_switches)
AMETEK, U.S. Gauge Div. (C) (www.ametekusg.com)
Aromat Corp. (E1, E2) (www.aromat.com)
Balluff Inc. (B1) (www.balluff.com)
Baumer Electric, Ltd. (A1, B1, E1, G1) (www.baumerelectric.com)
Burgess-Saia Inc. (B1) (www.saia-burgess.com)

© 2003 by Béla Lipták

Capacitec Inc. (A1) (www.capacitec.com)
Clippard Instrument Laboratory (F1) (www.clippard.com)
Contrologic Ltd. (E2) (www.contrologic.co.th)
Custom Switches Inc. (B2) (www.custom-switches.com)
Daytronic Corp. (G1) (www.daytronic.com)
Dolan-Jenner Ind. (E1, E2) (www.horrigan-motion/dolan.htm)
Eaton Corp. (B1, E1, G2) (www.eaton.com)
Eldec Corp. (B1) (www.eldec.com)
Electro Corp. (G1, G2) (www.electrosensors.com)
Euchner-USA Inc. (B1) (www.euchner-usa.com)
Fargo Controls Inc. (A1, B1, B2, E1) (www.fargocontrols.com)
FSI/Fork Standards Inc. (A1, B2) (www.fsinet.com)
George Risk Ind. (B2) (www.grisk.com)
Gordon Products Inc. (A1, B1) (www.gordonproducts.com)
Hewlett-Packard (E2) (www.the new.hp.com)
Hubbell Industrial Controls Inc. (B1) (www.hubbell-ind.com)
Hyde Park Electronics (G1) (www.hpsensors.com)
IFM Efector (B1) (www.ifmefector.com)
Kanson Electronics Inc. (B1, E1, G1) (www.issc-kanson.com)
Kaman Instrumentation Corp. (B1) (www.motionnet.com)
Kay-Ray/Sensall (G1) (www.measure.org)
Keyence Corp. (E1) (www.world.keyence.com)
Locon Sensor Systems Inc. (B1, E1) (www.locon.net)
Massa Products (G2) (www.massa.com)
Mekontrol (E1) (www.speckvc.com)
Metrix Instrument Co. (B1) (www.metrix1.com)
MicroSwitch/Honeywell (A1, B2, D, E1, G1, G2) (www.content.honeywell/sensing)
Monarch Instrument (B1, E1) (www.monarchinstrument.com)
MTI Instruments (A2) (www.mtiinstruments.com)
Namco Controls (E1) (www.namcocontrols.de)
O'Keefe Controls (F1) (www.okcc.com)
Omron Electronics Inc. (A1, B1, E1, G2) (www.omron.com)
Ono Sokki Technology Inc. (A2, F2) (www.onosokki.net)
Optodyne (E2) (www.optodyne.com)
Parsonics (G1) (www.parsonicscorp.com)
Pepperl + Fuchs Inc. (A1, B1, D, G1, G2) (www.am.pepperl-fuchs.com)
Pulnix America (E1) (www.pulnix.com)
Rechner Electronics Industries (B1) (www.rechner.com)
Red Lion Controls (B1, E1) (www.redlion-controls.com)
Schaevitz (C) (www.schaevitz.com)
Smar (B2) (www.smar.com)
Sunx Sensors (B1, E1, G1) (www.sunx-ramco.com)
Turck Inc. (A1, B1, G1) (www.turck.com)
Veeder-Root (B1, D) (www.veeder.com)
Warner Electric (B1, B2) (www.warnernet.com)

Section 7.10 described the sensors available for the measurement of linear and angular positions. Section 7.20 is devoted to the measurement of thickness and other dimensions. This section concentrates on limit switches and on the measurement of proximity.

INTRODUCTION

Sensors for the measurement of position, displacement, and proximity may use resistive, capacitive, inductive, or photoelectric methods. Displacement sensors can mechanically sense the position of an object relative to a fixed reference point. Proximity sensors can also measure linear or angular motion but without making physical contact with the detected object.

Typical applications include the inspection or detection and control of the position of machine tools, manufacturing systems, or moving components of valves and dampers. They are used as safety sensors or operational limit controls in packaging, printing, molding, and chemical and food processing industries.

CAPACITIVE SENSORS

In these sensors, a high frequency oscillator creates a field in the surroundings of the sensing surface. The presence of any capacitive object in these surroundings causes a change

© 2003 by Béla Lipták

in the oscillation amplitude, and a threshold circuit detects that change and generates the output. The triggering distance depends on the size, shape, and material of the object. If the sensitivity to metals is taken as 1.0, the sensitivity to water is also 1.0, plastic or glass is 0.5, and wood is 0.4. Usually a screw is placed on the capacitive sensor, which allows regulation of the operating distance.

Capacitive sensors are more often used for linear than angular proximity measurements. Either the dielectric or one of the capacitor plates is movable for displacement measurement. Capacitive proximity sensors use the measured object as one plate, and the sensor contains the other plate. The capacitance changes according to the question.

$$C = k/d \qquad \textbf{7.14(1)}$$

where

k = is a constant, depending on the area of the plates and the dielectric constant
d = the distance between the plates

Capacitive transducers are available with packaged signal-conversion circuitry for DC output operation.

Capacitive sensors are widely used for dimensional inspections in large-volume manufacturing operations, such as the filling of containers or the monitoring of the wearing of moving surfaces. In nonconductive materials (glass, plastics, wood), the switch detects the change in dielectric constant; in conductive materials, an additional signal is produced by terminal conductivity. The proximity switches illustrated in Figure 7.14a can detect liquids, glass, plastic, wood, or metallic objects. For the proximity switches shown, the sensing distance can be fixed or adjustable between 0.1 and 1.0 in. (3 to 25 mm).

Proximity switches provided with sensing plates can operate over a range of 0.2 to 5 in. (5 to 127 mm), can detect capacitance changes down to 0.02 pF, and can detect more than 100 operations/s. The switch is operated when the capacitance caused by the approaching object exceeds the reference level set to trigger the switch.

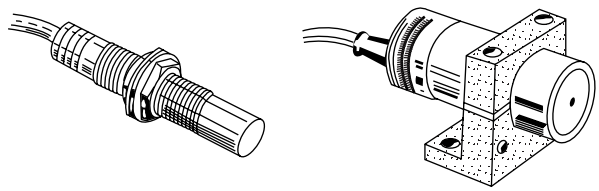

FIG. 7.14a
Capacitive proximity switches. (Courtesy of Omron Electronics Inc.)

INDUCTIVE SENSORS

In this type of proximity switch, similar to the capacitive one, an electromagnetic field is generated by a high frequency (radio frequency) oscillator circuit in front of a coil. If a metallic object moves inside the field generated by the sensor, an eddy current is generated in the metallic object, which loads the oscillator and causes a voltage drop in it.

Figure 7.14b shows the sensing envelope of the switch for a particular target size. The envelope increases with target size and decreases with nonferrous metals. The target can enter this envelope axially or laterally and is detected when they first touch the envelope. This switch is also called a self-contained proximity switch or an eddy-current killed oscillator design.

The outside appearance is similar to the capacitance units shown in Figure 7.14a. The sensing face of the probe contains the coil. The switch has no moving parts and therefore its mean time between failure is long, about 200,000 hours. It is also immune to shock and vibration and can be connected directly to programmable logic controllers. Detection ranges can vary from 0.1 to 2 in. (2 to 50 mm). Typical applications

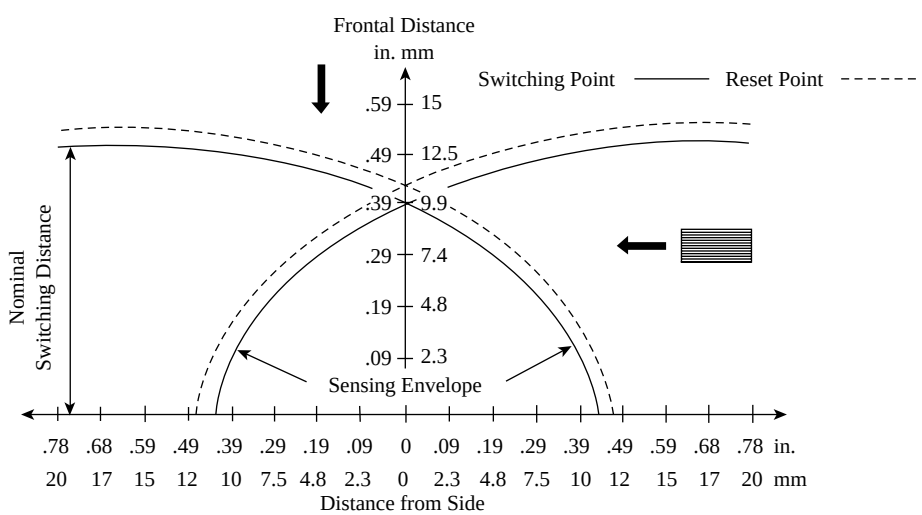

FIG. 7.14b
The sensing envelope of an induction-type proximity switch for a steel target size of 1.6 × 1.6 × 0.03 in. (41 × 41 × 1.5 mm).

© 2003 by Béla Lipták

include machine tools, material handling, packaging, and conveyors.

MAGNETIC SENSORS

Magnetic sensors are actuated by the presence of permanent magnets. The magnetically actuated reed switch consists of two low reluctance ferromagnetic reeds enclosed in glass bulbs filled with inert gas. The reciprocal attraction of both reeds in the presence of a magnetic field, caused by magnetic induction, closes an electric contact.

For this design to function, the object to be detected must contain a magnet. When the actuating magnet reaches the actuating distance from the reed switch, the contact is closed. These switches can operate the loads directly (without relays) because their contact ratings are around 15 VA. Their natural applications are in the area of counting the rotation or reciprocation of objects. Their speed of closure can approach 100/s, and their life expectancy is in the tens of millions of operations.

A proximity switch that is used less often is the variable reluctance sensor, which alters the voltage generated at its coil terminals as an object distorts its magnetic flux. This principle is more often applied in connection with rotating machinery, such as tachometers for speed measurement.

Hall-Effect Sensors

One of the most successful magnetic proximity switches is actuated by the field of magnets due to the Hall effect. Their most common actuator is a moving permanent magnet. As shown in Figure 7.14c, the magnet movement can be head-on or slide-by. The curves are based on a microswitch standard magnet, which is 1.25 in. (31.8 mm) long and 0.25 in. (6.4 mm) in diameter.

The induction (gauss) of the Hall-effect sensor varies with the distance to the magnet. This switch eliminates the contact-bounce problem of mechanical limit switches and provides a directly computer-compatible output. Speed of operation is about 25 kHz. The Hall-effect switch is not recommended for use in areas where high magnetic fields are present, and its connecting wires should not be run in the same conduit with high-power lines.

Linear Variable Differential Transformer Sensors

Another magnetic effect position sensor is the linear variable differential transformer (LVDT), which produces an AC voltage that is proportional to the displacement of a movable ferromagnetic core. These units are more often used as position or force transducers than as proximity switches, but it is possible to use them in that mode.

Inductive sensors consist of single-coil units, which use a change in self-inductance of the coil, and multiple-coil units, which rely on the change in magnetic coupling or reluctance between coils. Single-coil displacement sensors use a movable core to change the self-inductance. Single-coil proximity sensors use the magnetic properties of the object itself to modify the self-inductance. The change in inductance is usually sensed with a bridge circuit or oscillator.

Multiple-coil inductive sensors consist of the differential transformer and its variations. The LVDT uses three windings and a movable core to sense linear displacement.

A typical LVDT configuration is shown in Figure 7.14d. The transformer's secondary windings are wound to produce opposing voltages and connected in series. With the core in the neutral or zero position, voltages induced in the secondary windings are equal and opposite and the net output is a minimum. Displacement of the core increases the magnetic coupling between the primary coil and one of the secondary

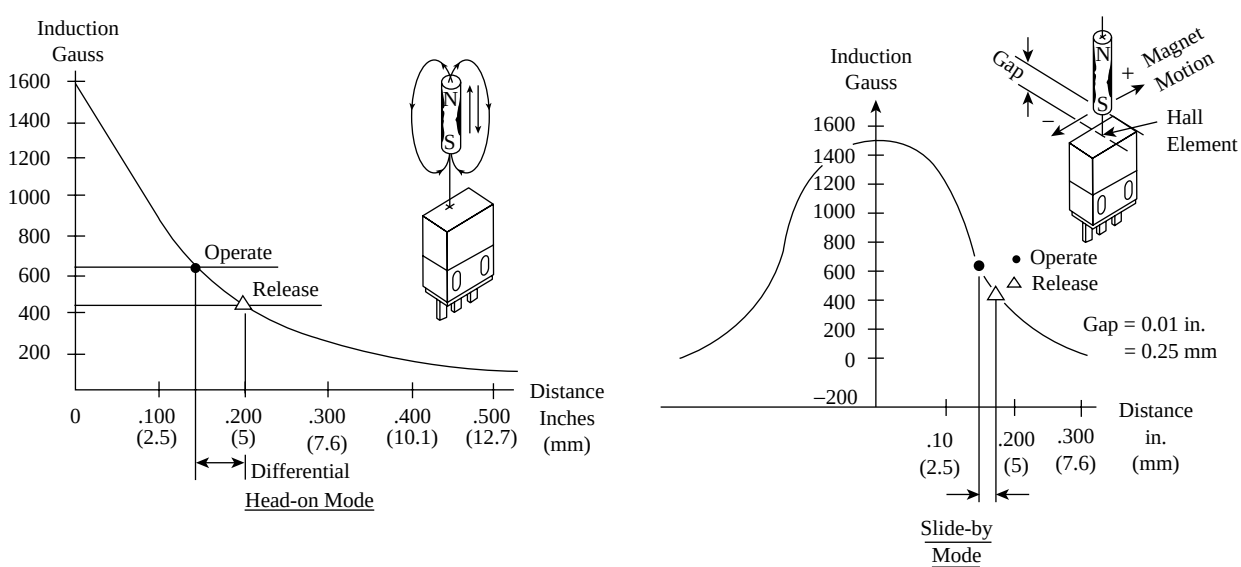

FIG. 7.14c

The operation of a particular Hall-effect proximity switch in the head-on and the slide-by modes. (Courtesy of MicroSwitch/Honeywell.)

© 2003 by Béla Lipták

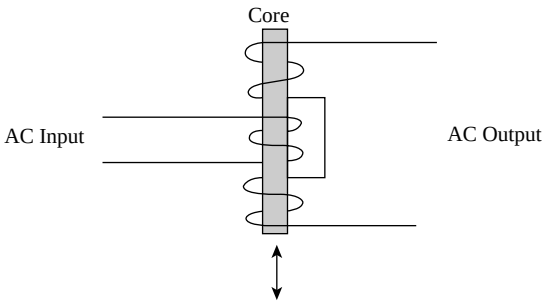

FIG. 7.14d
An LVDT configuration.

coils and decreases the coupling between the primary coil and the other secondary coil. The net voltage increases as the core is moved away from the center position, and the phase angle increases or decreases as a function of the direction in which the core is moved.

A demodulator circuit can be used to produce a DC output from this winding configuration. Differential transformers are also available for angular measurement in which the core rotates about a fixed axis.

Variations in winding configurations are used in synchros, resolvers, and microsyns. Inductance bridge sensors utilize two coils with a moving core to change the inductance of the coils that form one half of an AC bridge. These sensors are available in linear and angular configurations.

MECHANICAL LIMIT SWITCHES

The mechanical limit switches are the oldest position detectors. They were developed before solid-state electronic devices became available. They are installed so that the object that is being detected moves the lever, plunger, or wobble stick of the switch, and when the object has passed, either a spring or gravity acts to return the switch to its original state. The roller lever design of this switch is illustrated in Figure 7.14e. These units are well suited for detecting millions of repetitive operations in relatively dirty industrial environments where water- and oil-tight designs are required.

OPTICAL SENSORS

These sensors consist of a light source (emitter) and light receiver and depend on light-sensitive elements to detect the presence of objects. Three types are available:

1. Direct Reflection—The emitter and receiver are housed together and use the reflected light directly from the detected object.
2. Reflector with Reflector—The emitter and receiver are housed together and require a reflector. In this design, the object is detected when it interrupts the light beam between the sensor and the reflector.
3. Thru Beam—The emitter and receiver are housed separately and they detect the object when it interrupts the light beam between them.

Photoelectric and laser devices are capable of measuring position, thickness, flatness, length, and other dimension-related properties. The available proximity switch designs can be grouped according to the:

1. Light source (incandescent, light emitting diodes [LED], infrared, laser)
2. Detector used (photocells, photo-transducers)

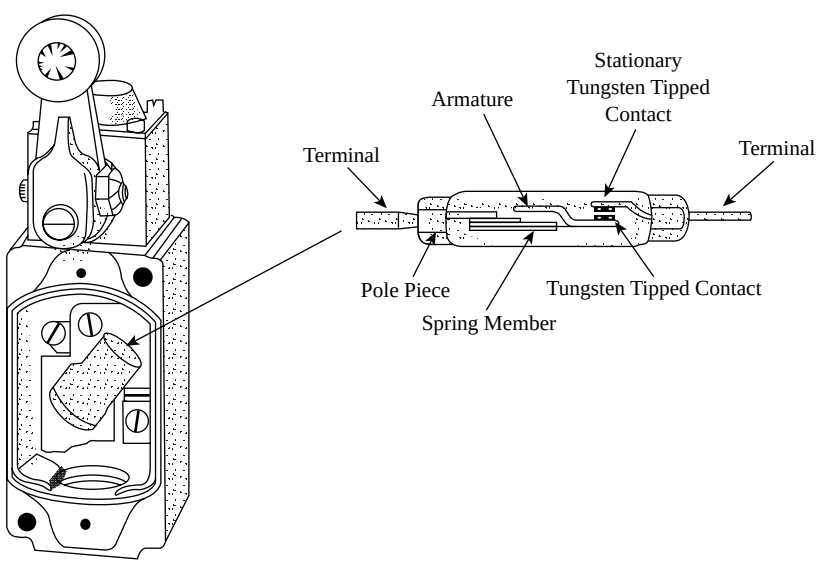

FIG. 7.14e
Mechanical limit switch provided with a fixed lever actuator, with a 1.5 in. (38 mm) diameter roller and sealed switch. (Courtesy of Allen Bradley.)

© 2003 by Béla Lipták

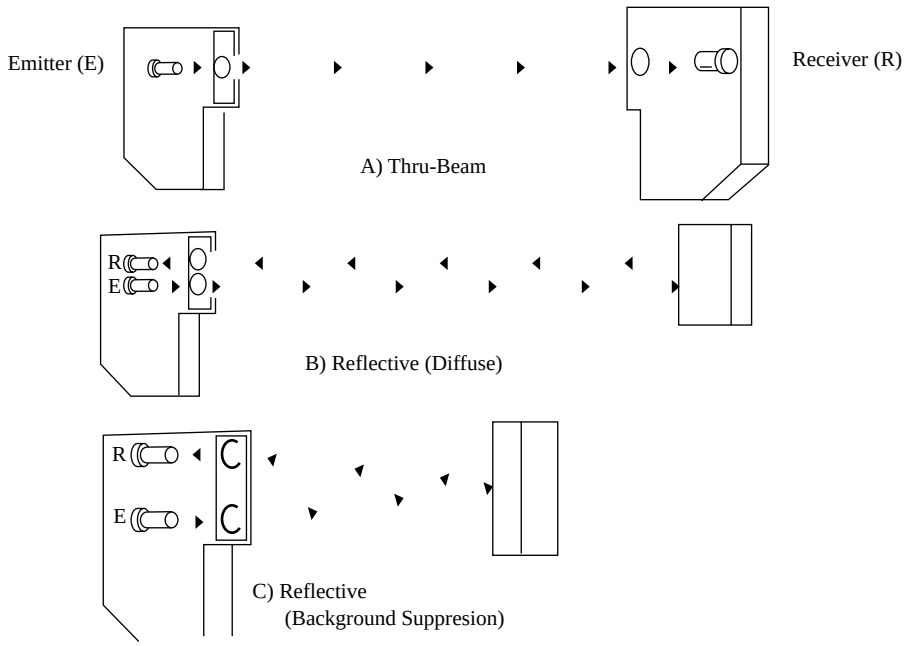

FIG. 7.14f
Thru-beam and reflective installation of photoelectric sensors. (Courtesy of Baumer Electric Ltd.)

3. Light path (thru-beam or the reflective mode, which can be implemented in the diffuse; specular, retro-reflective, or fiber-optic configurations)

Photoelectric sensors can detect the presence or absence of opaque or translucent objects at distances from a few millimeters to several hundred feet or meters. They do not require physical contact; are relatively inexpensive; and are well suited for counting, mail and package handling, security surveillance, and many other applications.

Light Sources

What distinguishes the different light sources is their immunity to interference from sunshine and their loss of intensity as distances increase. For example, laser sources tend to allow for longer ranges, while immunity from natural light is obtained by using pulsed infrared (IR) light.

The IR light can be obtained from infrared emitters (such as gallium arsenic), from incandescent light sources filtered by mechanical choppers, or from LEDs. The LEDs respond only a narrow IR frequency band and therefore are unaffected by visible light. They are superior in their life expectancy, about 100,000 hours, which is ten times that of incandescent lights, and in their suitability for direct modulation.

Incandescent sources, due to their wide spectrum from ultraviolet to IR, have the advantage of being able to distinguish and detect colored targets.

Light Detectors

The two main types of light detectors are photocells and phototransistors. Both are photoconductive devices that increase their electric conductivity as they absorb light or radiation at other wavelengths. Photocells are made from cadmium sulfide and cadmium selenide. Their speeds of response change with the amount of light absorbed, and they have a greater response at longer wavelengths (red and IR) than in the blue-violet area.

Phototransistors and photodiodes are ideal matches for infrared LED sources because they are most sensitive in the IR region. Their response is faster than that of the photocells, but they are less sensitive and their response is affected by temperature.

Optical Detector Installations

The photoelectric sensors can be installed in thru-beam or reflective configurations (Figure 7.14f). In the thru-beam configuration, the light emitter and receiver are positioned opposite to each other and the detected object passes between them. The thru-beam configuration offers the longest scanning distances, exceeding 100 ft (30 m). In the standard design, the detected object must have a diameter which is 50% of that of the lens. When converging lenses or laser sources are used, this limitation no longer applies.

Reflective In a reflective installation, the emitter and receiver are located on the same side of the detected object. Figure 7.14f illustrates two reflective installations: diffuse and background suppression (secular). In diffuse sensing, the light beam (usually IR and pulsed) directly hits the target and is diffused (reflected) in all directions. In this configuration, only a small percentage of the light is returned to the receiver and the measurement distance is limited. The design is suited for detecting objects with dull surfaces and for distinguishing between black and white targets.

© 2003 by Béla Lipták

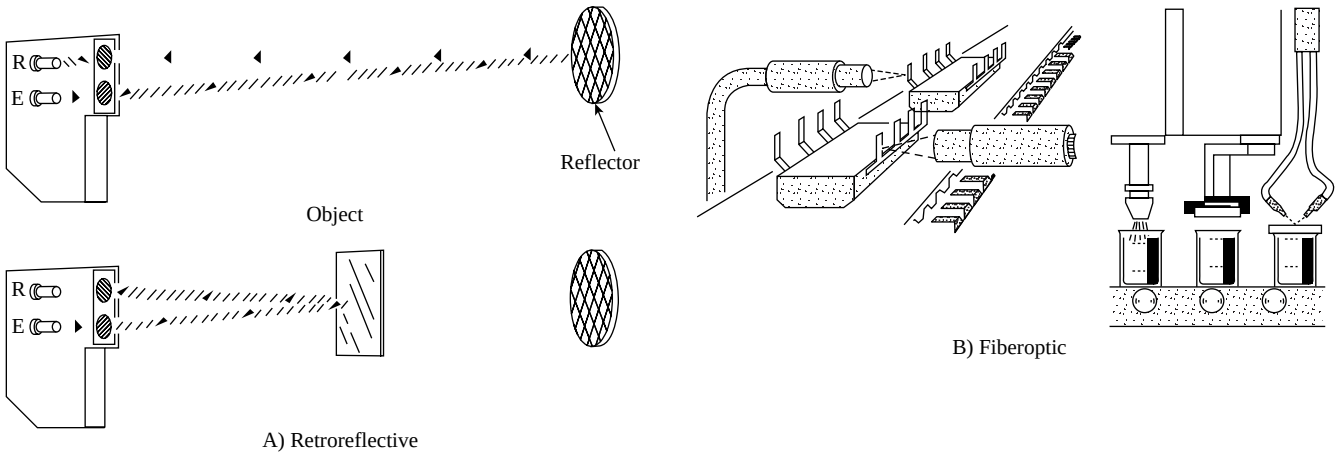

FIG. 7.14g
Retroreflective and fiber-optic sensors. (Courtesy of Baumer Electric Ltd.)

Figure 7.14f also illustrates a method of background suppression. There the light is precisely focused within a precisely defined scan range. This technique is suited for the detection of small objects or for detecting the contents within transparent packaging. In specular reflective sensors, the light is directed at a reflective surface at an angle and the receiver is positioned to detect the reflected light at the same angle. This technique is used on shiny plastic, polished metal, and similar applications.

Retroreflective In retroreflective sensors (Figure 7.14g) the emitter and receiver are in the same housing and the light beam is directed at a target that is retroreflective, meaning that it returns the light along the same path over which it was sent. The receiver recognizes the detected object by the returned light beam being interrupted. The detected objects must be opaque and should not be very shiny. The scan ranges available from these units (up to 30 ft, or 10 m) are greater than with diffuse sensing.

Optical Fibers The addition of optical fibers can enhance the performance of both thru-beam and reflective sensors, particularly in terms of their ability to accurately detect objects as small as 0.002 in. (0.05 mm). The triple-beam version of the fiber-optic design can detect objects as small as 0.0002 in. (0.005 mm) at speeds of 0.5 m/s.

The precision of fiber-optic sensors is surpassed only by triple-beam laser detectors, which are capable of detecting dimensions to a resolution of microns.

PNEUMATIC SENSORS

Pneumatic gauging is widely used in manufacturing to check the diameters of holes, the dimensions of manufactured products, or the contour of devices. In proximity switch applications, an orifice-regulated constant air supply is used. When the airflow is obstructed by the object being detected, the back-pressure builds up, and this rise in pressure is detected by a switch (Figure 7.14h). This technique can be used to check dimensions by setting the back-pressure switch to actuate at the desired value.

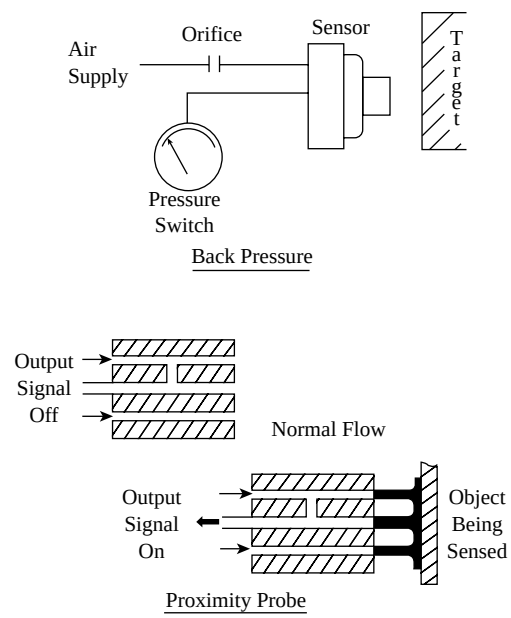

FIG. 7.14h
Pneumatic proximity switches can detect only small air gaps. (Courtesy of O'Keefe Controls.)

Another pneumatic proximity probe configuration (also shown in Figure 7.14h) detects the presence or absence of an output signal. This miniature proximity probe generates an output signal only when there is an object in its sensing range, causing a reflection of the air jet. These devices are capable of detecting distances up to 0.125 in. (3.2 mm).

ULTRASONIC SENSORS

Ultrasonic sensors are used both as thickness gauges (see Section 7.20) and as proximity switches. Only the proximity sensors will be discussed here. The proximity design detects

© 2003 by Béla Lipták

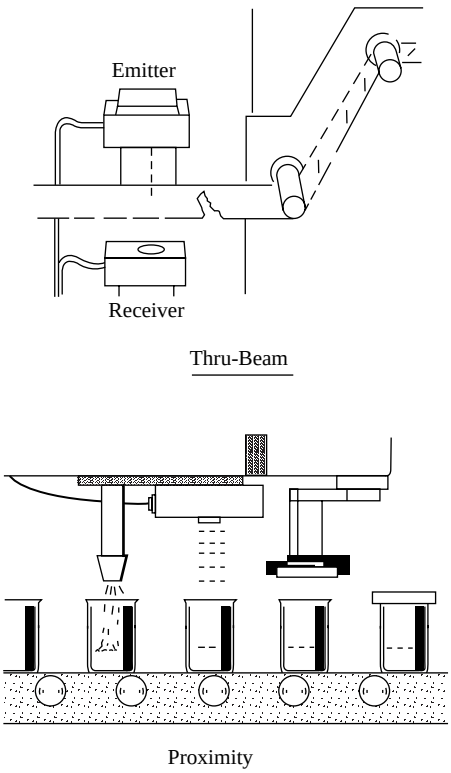

FIG. 7.14i
Ultrasonic proximity switches of thru-beam and proximity designs. (Courtesy of Baumer Electric Ltd.)

the distance between the transducer and the measured object by transmitting an ultrasonic (1 to 5 MHz) burst of energy and sensing the time of arrival of the echo. In the thru-beam type design, the emitter sends out a continuous sound signal and the presence of a detected object is noted by its breaking that sonic beam.

Both of these designs are shown in Figure 7.14i. The high frequency used protects from the interference of most extraneous noise sources. The preferred surface of the detected object is smooth and flat; hot or sound-absorbing surfaces or surfaces in the presence of strong air streams are not suitable for this type of detection. The detectable object size varies with distance and surface quality and, in general, is much larger than with optical sensors.

DIGITAL OUTPUTS AND ENCODERS

Proximity sensors can generate either digital outputs or pulses. They detect the changes that are occurring in either electrical conduction, induction, or photoelectric conduction.

Conducting encoders use brushes or wipers to detect the position of a coded disk or plate. If a single track is employed, a number of pulses are produced as the disk or plate is moved. Direction is detected by adding another track, which is offset to produce sequence logic. Electronic counting circuitry is used to count the number of pulses and perform the conversion

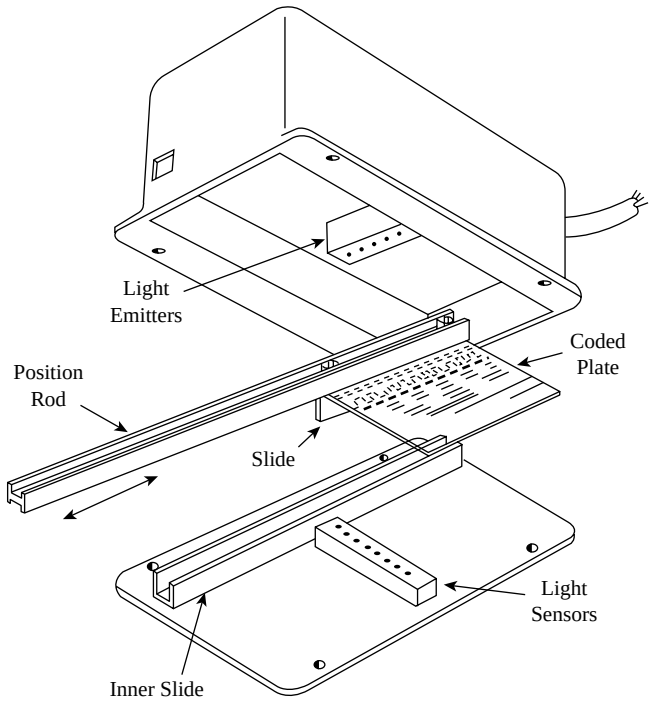

FIG. 7.14j
Digital displacement sensor.

to angular or linear measurement. Multiple-track encoders provide a digital or binary coded output, which is a function of the absolute angular or linear position.

Magnetic proximity sensors can be employed with gears of ferromagnetic material to produce pulses from a change in linear or angular position. Direction sensing can be obtained by shaping the gear teeth in a symmetrical pattern in order to modify the output waveform.

Photoelectric encoders use a light source and the detector with disks or plates of transparent and opaque windows. Operation is similar to conducting encoders except that switching is accomplished by breaking the path of the light beam between the source and detector. Multiple-tracked encoders may use arrays of sources, such as LEDs, and detectors as shown in Figure 7.14j.

The laser interferometer uses a laser beam that is directed as a reflector on the measured object. Changes in the linear displacement of the object produce interference fringes, which are counted by electronic circuitry.

APPLICATIONS

Proximity sensors are selected the same way as most measuring instruments, namely, by first considering the technical and then economic requirements. In DC systems, potentiometric transducers are often used because of their simplicity, strong outputs (50 V or higher), and displacements (up to 24 in., or 0.61 m).

© 2003 by Béla Lipták

Reluctive transducers with DC-to-DC conversion circuitry offer displacements between 0.01 and 120 in. (0.25 mm and 3 m). Capacitive and inductive proximity sensors as well as photoelectric sensors can be used to detect displacement changes as small as 1 μin. In AC systems, multiple-coil inductive sensors are used more than all others. Maximum accuracy can be obtained with incremental and absolute digital displacement sensors along with photoelectric units such as interferometers.

Bibliography

Bailey, S.J., "Optical Sensors Critical to Future Productivity," *Control Engineering*, June 1982.

Brenza, R.M., "Digital Tracking Controls Motor Rotor Positions," *Control Engineering*, January 1982.

Cullum, W. and Kratzer, H., "Measuring Shaft Position by Applying Synchro or Resolver Transducers," *Control Engineering*, January 1982.

Dyer, S.A., *Survey of Instrumentation and Measurement*, New York: John Wiley & Sons, 2001.

Ellis, J.F., "Using Eddy Currents for Proximity Measurements," *Instruments and Control Systems*, April 1973.

Fauque, J., "Air Gaging," *Measurements and Control*, April 1991.

Gaines, D.J., "When Are Solid State Position Sensors the Best Choice?" *Instruments and Controls Systems*, March 1978.

Garlewsky, P. and Dolson, R., "A Guide to Inductive Proximity Switches," *Instruments and Control Systems*, October 1981.

Graf, R.F., *Measuring Circuits*, Oxford, Butterworth-Heinemann, 1997.

Hornung, M.R., *Ultrasound Based Proximity Sensors*, Dordrecht: Kluwer Academic Publishers, 1999

Hordeski, M.F., "Digital Sensors Simplify Digital Measurement Systems," *Measurements and Data*, May–June 1976.

Keehbauch, T.J., "Programmable Position Control Uses Standard Induction Motor as Servo," *Control Engineering*, January 1984.

Morris, H.M., "Robotic Servio Systems Need Accurate Positional Feedback Inputs," *Control Engineering*, January 1984.

Poppe, F.W., "Photoelectric Sensing," *Measurements and Control*, October 1991.

Wohlstein, S., "Laser Gaging," *Measurements and Control*, June 1991.

© 2003 by Béla Lipták

7.15 Relief Valves—Determination of Required Capacity

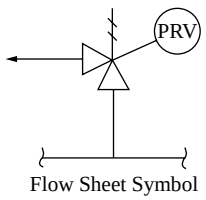

Flow Sheet Symbol

W. F. SCHLEGEL (1969, 1982) **R. V. BOYD AND B. P. GUPTA** (1995)
B. G. LIPTÁK (2003)*

INTRODUCTION

Protection against overpressure is one of the most important design tasks in the chemical, petrochemical, oil, and gas industries. The various causes of overpressure fall into two broad categories: fire conditions and process conditions. The purpose of overpressure protection systems is to reduce or eliminate the potential for overpressure-initiated explosions and fires.

For the sizing, selection, and specification of pressure relief valves (PRVs), refer to the next section; for a discussion of rupture disks, see Section 7.17. In this section, the determination of the required relief capacity is discussed. The section begins with an explanation of the methods for relief capacity determination for fire protection. The second half of the section discusses some relief capacity determination techniques for other, nonfire process causes of overpressure conditions. This section is concluded by a listing of PRV-related terms and definitions, followed by a bibliography.

APPLICABLE CODES AND STANDARDS

Four major sets of codes and standards need to be considered when designing pressure relief systems. These have been prepared by the American Society of Mechanical Engineers (ASME), the American Petroleum Institute (API), the National Fire Protection Association, and the Occupational Safety and Health Administration (OSHA).

ASME Codes

The pressure relief requirements of both boilers and of pressure vessels are covered in the *ASME Boiler and Pressure Vessel Code.* Section I of this code describes the requirements for steam generators, fired boilers, and associated tanks, whereas Section VIII of this code covers the pressure relief requirements of unfired pressure vessels. The requirements of these two sections yield different results, and neither of the two sections covers the pressure relief requirements of storage vessels, which are designed for pressures under 15 PSIG.

Excerpts from ASME Code

UG-125(c)—All pressure vessels other than unfired steam boilers shall be protected by pressure-relieving devices that shall prevent the pressure from rising more than 10% or 3 psi, whichever is greater, above the maximum allowable working pressure except as permitted in (1) and (2). (See UG-134 for pressure settings.)

(1) When multiple pressure-relieving devices are provided and set in accordance with UG-134(a), they shall prevent the pressure from rising more than 16% or 4 psi, whichever is greater, above the maximum allowable working pressure.
(2) Where an additional hazard can be created by exposure of a pressure vessel to fire or other unexpected sources of external heat, supplemental pressure-relieving devices shall be installed to protect against excessive pressure. Such supplemental pressure-relieving devices shall be capable of preventing the pressure from rising more than 21% above the maximum allowable working pressure. The same pressure-relieving devices may be used to satisfy the capacity requirements of (c) or (c)(1) and this paragraph provided the pressure setting requirements of UG-134(a) are met.
(3) Pressure relief devices, intended primarily for protection against exposure of a pressure vessel to fire or other unexpected sources of external heat installed on vessels having no permanent supply connection and used for storage at ambient temperatures of nonrefrigerated liquefied compressed gasses, are excluded from the requirements of (c)(1) and (c)(2), provided:

*B. P. Gupta and W. Y. Wong should also be credited for work on this section.

© 2003 by Béla Lipták

(a) the relief devices are capable of preventing the pressure from rising more than 20% above the maximum allowable working pressure of the vessels;
(b) the set pressure of these devices shall not exceed the maximum allowable working pressure of the vessels;
(c) the vessels have sufficient ullage to avoid a liquid full condition;
(d) the maximum allowable working pressure of the vessels on which these devices are installed is greater than the vapor pressure of the stored liquefied compressed gas at the maximum anticipated temperature that the gas will reach under atmospheric conditions; and
(e) pressure relief valves used to satisfy these provisions also comply with the requirements of UG-129(a)(5), UG-131(c)(2), and UG-134(e)(2).

UG-126(b)—Pilot-operated pressure relief valves may be used, provided that the pilot is self-actuated and the main valve will open automatically at not over the set pressure and will discharge its full rated capacity if some essential part of the pilot should fail.

UG-126(c)—The spring in a pressure relief valve in service for pressures up to and including 250 psi [17.2 bars] shall not be reset for any pressure more than 10% above or 10% below that for which the valve is marked. For higher pressures, the spring shall not be reset for any pressure more than 5% above or 5% below that for which the safety or relief valve is marked.

UG-126(d)—The set pressure tolerances, plus or minus, of pressure relief valves shall not exceed 2 psi for pressures up to and including 70 psi [4.8 bars] and 3% for pressures above 70 psi [4.8 bars].

UG-131(d)(1)—A capacity certification test is required on a set of three valves for each combination of size, design, and pressure setting. The stamped capacity rating for each combination of design, size, and test pressure shall not exceed 90% of the average capacity of the three valves tested. The capacity for each set of three valves shall fall within a range of ±5% of the average capacity. Failure to meet this requirement shall be cause to refuse certification of that particular safety valve design.

UG-133(a)—As permitted in (b), the aggregate capacity of the pressure-relieving devices connected to any vessel or system of vessels for the release of a liquid, air, steam, or other vapor shall be sufficient to carry off the maximum quantity that can be generated or supplied to the attached equipment without permitting a rise in pressure within the vessel of more than 16% above the maximum allowable working pressure when the pressure-relieving devices are blowing.

UG-133(b)—Protective devices as permitted in UG-125(c)(2), as protection against excessive pressure caused by exposure to fire or other sources of external heat, shall have a relieving capacity sufficient to prevent the pressure from rising more than 21% above the maximum allowable working pressure of the vessel when all pressure-relieving devices are blowing.

UG-134(d)(1)—The set pressure tolerance for pressure relief valves shall not exceed ±2 psi for pressures up to and including 70 psi and 3% for pressures above 70 psi [4.8 bars], except as covered in (d)(2).

UG-134(d)(2)—The set pressure tolerance of pressure relief valves which comply with UG-125(c)(3) shall be within –0%, +10%.

API Standards and Recommended Practices

In general, oil refineries tend to base their pressure relief system designs on the API standards and recommended practices (RPs). The most widely used API documents are as follows:

- API Recommended Practice 520, Sizing, Selection, and Installation of Pressure-Relieving Devices in Refineries, 7th ed., January 2000
- API Recommended Practice 521, Guide for Pressure-Relieving and Depressuring Systems
- API Standard 2000, Venting Atmospheric and Low-Pressure Storage Tanks (Nonrefrigerated and Refrigerated), 2000 ed.

The API 2000 standard is also widely used in other industries beyond refineries to set the pressure relief requirements for storage vessels, which are designed for pressures under 15 PSIG. Some of the other API standards and recommended practices that are relevant to PRV system design include the following:

- API Standard 526, Flanged Steel Pressure Relief Valves
- API Standard 527, Seat Tightness of Pressure
- API Recommended Practice 550, Manual on Installation of Refinery Instruments and Control Systems
- API PR 576, Inspection of Pressure-Relieving Devices

NFPA Codes

For determining the required relieving capacity from tanks and storage vessels, when exposed to external fire, both the API and the NFPA codes can be used. The most often used NFPA codes are the following:

- NFPA 30, Flammable and Combustible Liquids
- NFPA 58, Liquefied Petroleum Gases, Storage and Handling

© 2003 by Béla Lipták

OSHA Codes

The OSHA codes that relate to the design of pressure safety systems are the following:

- OSHA 1910.106, Flammable and Combustible Liquids
- OSHA 1910.110, Liquefied Petroleum Gases
- OSHA 1910.119, Process Safety Management

CAUSES OF OVERPRESSURE

Overpressure can be caused by fire and by nonfire process causes. In the second category, there can be many potential causes. These will be discussed after the treatment of fire protection that follows in the next paragraph. The potential nonfire causes of overpressure include the following:

1. Utility failures, which can be the failure of electric power, instrument air, steam, coolant, or fuel
2. Thermal expansion
3. Blocked outlets
4. Valve or process control failure
5. Equipment failure
6. Runaway chemical reaction
7. Human error

It should be emphasized that part of the goal of a safe plant design is the goal of minimizing the opportunities for human error.

Substituting for Pressure Relief Devices

In general it is not recommended to accept fail-safe instruments or the actions of automatic control loops as substitutes for PRVs. This is because the reliability of control systems has not advanced to the point where they are completely reliable. Their reliability has increased substantially by the invention of high integrity protective systems (HIPSs), emergency power supplies (EPSs), uninterruptible power supplies (UPSs), triple redundancy, and "two out of three" voting systems. Yet, to date, there is no code or regulation that accepts automatic process control as a substitute for the installation of PRVs.

Similarly, the various safety oriented administrative procedures cannot be used as substitutes for PRVs. This is because human error can never be fully eliminated, and no matter what the administrative procedure says, (according to Murphy's Law) if it is possible to forget to drain a pipeline of its toxic or hazardous content, it will happen. One exception involves the use of car seals open (CSO) and car seals locked (CSL) valves, which API RP 520 and 521 accept as means of guaranteeing that equipment will not be blocked in.

In the overpressure analysis of a plant, the design engineer does not need to consider the possibility of the simultaneous occurrence of more than one cause of overpressure. In other words, if, for example, a chemical reactor PRV has been sized to handle the largest of overpressure causes from among fire, run-away chemical reaction, loss of utilities, etc., that is sufficient. It is not necessary to consider their simultaneous occurrence and size the PRV for the sum of two or more of these causes.

FIRE PROTECTION

The ASME Unfired Pressure Vessel Code requires that pressure vessels covered by the code be adequately relieved. External fire is a potential overpressure source; therefore, for fire conditions, the code requires that relief devices be sized such that, at maximum relieving conditions, the vessel pressure does not exceed the vessel design pressure by more than 20%. This is referred to as 20% accumulation.

For vessels with adequate liquid inventory, the required relief capacity under fire conditions is a function of tank area exposed to fire, of the heat flux per unit area of tank surface, and of the latent heat of the process fluid. These three factors will be separately discussed below. The first to be discussed is the determination of the applicable heat flux.

Gas-Filled Tanks

If the vessel does not have an adequate liquid inventory, stress rupture can occur from overheated spots long before the internal pressure in the tank would reach the setting of the PRV. Therefore, gas-filled tanks and vessels with low liquid inventory require different approaches for protection against overpressure, and design engineers should consider API RP 521 for determining the PRV size required when the tank is exposed to fire and some or most of its inner surface is not wetted.

In most cases, PRVs sized in accordance with API RP 520 cannot give overpressure protection to gas-filled tanks. Therefore, when the installation of hydrogen or other flammable gas-filled vessels is being designed, the following options should also be considered:

1. Bury the tank under ground and cover it with earth.
2. Move the vessel away from the process area or surround it by a dike or a firewall.
3. Elevate the vessel over the fire height (API, 25 ft, NFPA, 30 ft above grade).
4. Use a water deluge system or install fireproof insulation.
5. Provide automatic vapor depressurization.
6. Provide automatic fire monitoring and automatic fire fighting capability.

Heat Absorption Across Unwetted Surfaces The effective discharge area of a relief valve required to protect a vessel that is exposed to external fire and has unwetted surface area can be determined by Equations 7.15(1) and 7.15(2).

$$A = (F'A')/\sqrt{P_u} \qquad \textbf{7.15(1)}$$

© 2003 by Béla Lipták

where

A = the effective discharge area of the PRV valve, in.^{2}
A′ = the surface area of the vessel, which is exposed to fire, ft^2
P_u = the upstream relieving pressure, which is the sum of the atmospheric, the set pressure, and the overpressure, PSIA

The environmental factor F′ is calculated from Equation 7.15(2) as follows:

$$F' = (0.1406/CK_d)[(T_w - T_1)^{1.25}/T_1^{0.6506}] \qquad \textbf{7.15(2)}$$

where

C = a constant that depends on the specific heat ratio of the particular gas. For the specific heat ratio (k) of a number of gases, refer to Table 7.15a, and for a curve relating this ratio to coefficient C, refer to Figure 7.15b.
K_d = the coefficient of discharge of the PRV, which, for preliminary sizing purposes, can be assumed to be 0.975
T_w = the expected wall temperature of the tank, which, for carbon steel plate materials, can be assumed to be 1,100°F
T_1 = the gas temperature in °R at the upstream relieving pressure (P_u). It is calculated by Equation 7.15(3) as follows:

$$T_1 = P_u T_n / P_n \qquad \textbf{7.15(3)}$$

where

P_n = the normal operating gas pressure, PSIA
T_n = the normal operating gas temperature, °R

Low Liquid Inventory Tanks

The definition of what is "adequate" in terms of liquid inventory is a function of the time required to evaporate that inventory during a fire vs. the response time of the fire fighters at the plant. Once the liquid is gone, the vessel becomes a gas-filled tank.

The minimum time is 10 to 15 min. This time period has to take into account the location of the fire-fighting equipment and the quality of the automatic fire monitoring instrumentation in the plant. A liquid inventory is usually considered "adequate" if it will last for at least 15 min during an external fire. If it does not, the fire protection rules for gas-filled tanks should be used.

Heat Flux Across Wetted Surfaces

When a vessel is exposed to external fire, the amount of heat absorption will depend on the following:

1. The wetted surface areas of the vessel and the connected associated piping
2. The amount and quality of the insulation provided on the tank and piping surfaces
3. The quality and availability of the fire-fighting equipment in the plant
4. The method applied to drain the flammable materials away from the tank

To determine the required relief capacity of a tank that is exposed to external fire, it is necessary to determine the heat flux. This is the rate at which heat is transferred into the vessel or other process equipment. A number of heat flux determination methods can be considered.

The simplest technique assumes that the heat flux is fixed and does not depend on the type and size of the vessel involved. Under such an assumption, the heat flux is taken to be a constant rate of 20,000 BTU/hr/ft^2 (63 kW/m^2). Other approaches relate the magnitude of the heat flux to the size of the vessel, reasoning that the larger the tank, the less likely it is that it will be completely immersed in flames.

API RP 521 provides one commonly used method for determining heat flux under fire conditions. This bulletin gives two recommendations for calculating the heat flux in BTU per hour per square foot of total wetted surface of a vessel that is exposed to fire. The two formulas are given in Table 7.15c, one for tanks with adequate drainage away from the tank, and the other for tanks without adequate drainage. A graphic representation of the formula for the adequate drainage condition is shown in Figure 7.15d.

Total Heat Absorption

API Recommendation API RP 520, seventh edition (January 2000), presents two widely used equations for determining the total heat absorption of wetted surface areas under fire conditions. Equation 7.15(4) is applicable if the means for both prompt fire-fighting capability and adequate drainage of flammable materials away from the tank are provided (ground with over 1% slope); Equation 7.15(5) is applicable if they are not.

$$Q = 21{,}000F(A)^{0.82} \qquad \textbf{7.15(4)}$$

$$Q = 34{,}500F(A)^{0.82} \qquad \textbf{7.15(5)}$$

where

Q = total heat absorption of wetted surface area exposed to fire, BTU/hr
F = environmental factor, a constant having a value of 1.0 or less
A = the total wetted surface area of the tank, ft^2

The reader should consult the API Recommended Practice 520 for additional details.

NFPA Recommendations Another standard that is commonly used in the determination of heat flux under fire conditions is in the recommendations of *NFPA Bulletin No. 30, Flammable*

© 2003 by Béla Lipták

TABLE 7.15a
Properties of Gases

Gas	Molecular Weight	Specific Heat Ratio ($k = C_p/C_v$) at 60°F and One Atmosphere	Critical Flow Pressure Ratio at 60°F and One Atmosphere	Specific Gravity at 60°F and One Atmosphere	Critical Constants		Condensation Temperature One Atmosphere (°F)	Flammability Limits (volume percent in air mixture)	References
					Pressure (psia)	Temperature (°F)			
Methane	16.04	1.31	0.54	0.554	673	–116	–259	5.0–15.0	
Ethane	30.07	1.19	0.57	1.058	718	90	–128	2.9–13.8	
Ethylene	28.03	1.24	0.57[a]	0.969	742	50	–155	2.7–34.8	
Propane	44.09	1.13	0.58	1.522	617	206	–44	2.1–9.5	
Propylene	47.08	1.15	0.58[a]	1.453	667	197	–54	2.8–10.8	2, 3
Isobutane	58.12	1.18	0.59[a]	2.007	529	273	11	1.8–8.4	1
n-Butane	58.12	1.19	0.59	2.007	551	304	31	1.9–8.4	
I-Butene	56.10	1.11	0.59[a]	1.937	543	276	21	1.4–9.3	2, 3
Isopentane	72.15	1.08	0.59[a]	2.491	483	369	82	1.4–8.3	
n-Pentane	72.15	1.08	0.59[a]	2.491	490	386	97	1.4–7.8	
l-Pentene	70.13	1.08	0.59[a]	2.421	586	377	86	1.4–8.7	
n-Hexane	86.18	1.06	0.59[a]	2.973	437	454	156	1.2–7.7	
Benzene	78.11	1.12	0.58	2.697	714	552	176	1.3–7.9	2, 3
n-Heptane	100.20	1.05	0.60[a]	3.459	397	513	209	1.0–7.0	
Toluene	92.13	1.09	0.59	3.181	590	604	231	1.2–7.1	2, 3
n-Octane	114.22	1.05	0.60[a]	3.944	362	564	258	0.96–	
n-Nonane	128.23	1.04	0.60[a]	4.428	552	610	303	0.87–2.9	
n-Decane	142.28	1.03	0.60[a]	4.912	304	632	345	0.78–2.6	
Air	29.96	1.40	0.53	1.000	547	–221	–313		2, 3
Ammonia	17.03	1.30	0.53	0.588	1636	270	–28	15.5–27.0	2, 3
Carbon dioxide	44.01	1.29	0.55	1.519	1071	88	–109		2, 3
Hydrogen	2.02	1.41	0.52	0.0696	188	–400	–423	4.0–74.2	2, 3
Hydrogen sulfide	34.08	1.32	0.53	1.176	1306	213	–77	4.3–45.5	2, 3
Sulfur dioxide	64.04	1.27	0.55	2.212	1143	316	14		2, 3
Steam	18.01	1.33	0.54	0.622	3206	706	212		2, 3

[a]Estimated.

References:

1. *Physical Constants of Hydrocarbons C_1 to C_{10}*, ASTM Special Technical Publication No. 109A, Philadelphia, PA, 1963.
2. *International-Critical Tables*, McGraw-Hill, New York.
3. *Engineering Data Book*, Gas Processors Suppliers Association, Tulsa, OK, 1977.

and Combustible Liquids. The National Fire Protection Association is an organization of insurance companies and regulatory organizations. Their recommendations are likely to meet the requirements of most insurance companies, as they are generally more conservative than the corresponding API recommendations.

Table 7.15e lists the equations recommended by NFPA for the determination of total heat absorption and for calculating the equivalent air flow for tanks exposed to external fire.

Low-Pressure Tanks For above-ground tanks and storage vessels designed to operate from atmospheric pressure to 14 PSIG (104 kPa) and used for the storage of flammable liquids, still another method of determining heat flux under fire conditions is available. This recommendation is based on the American Petroleum Institute and is presented in their bulletin API-RP-2000. This method is also referred to in the National Fire Codes of the National Fire Protection Association, for informational purposes only.

© 2003 by Béla Lipták

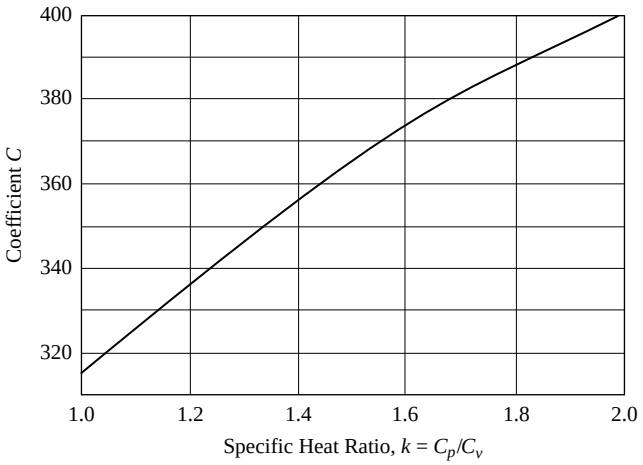

FIG. 7.15b
The relationship between the specific heat ratio (k) of gases and coefficient C. (Courtesy of the American Petroleum Institute from API Recommended Practice 520, Sizing, Selection, and Installation of Pressure-relieving Devices in Refineries, Part I – Sizing and Selection, 7th ed., January 2000.)

Table 7.16f gives the NFPA-30 heat flux calculation equations as a function of tank design pressure and wetted area. The NFPA recommended values of the environmental factor F are listed in Table 7.15j. For low-pressure tanks with design pressures under 1 PSIG and having wetted surface areas exceeding 2800 ft^2 (260 m^2), they have concluded that complete fire coverage is unlikely, and the maximum total heat input has been limited to 14,090,000 BTU/hr (4,128,370 W/hr). This heat input corresponds to a free air vent rate of 742,000 SCFH.

TABLE 7.15c
Heat Flux Calculation for Pressure Relieving Systems Based on API RP 521

Type of Tank Drainage	*Heat Flux (q), BTU/hr/f^2**
Adequate	$21{,}000FA^{-0.18}$
Inadequate	$34{,}500FA^{-0.18}$

*1 BTU/hr/ft^2 = 3.15 W/m^2

For a comparison between API RP 521 based heat flux recommendation for adequately drained regular tanks and NFPA's heat flux information for low pressure tanks, refer to Figure 7.15d.

Free Air Calculation This procedure relates the required relieving rate, expressed as cubic feet of free air per hour, to the wetted area. Relieving rates for low-pressure tanks are tabulated as shown in Table 7.15g. The data in this table are based on the physical properties of hexane and utilize the API recommendations for heat flux due to fire conditions. The total emergency relief capacity for any specific liquid may be calculated from Table 7.15g by the use of the following formula:

$$\text{Design cubic feet of free air per hour} = V1337/(\lambda\sqrt{M_w}) \qquad \textbf{7.15(6)}$$

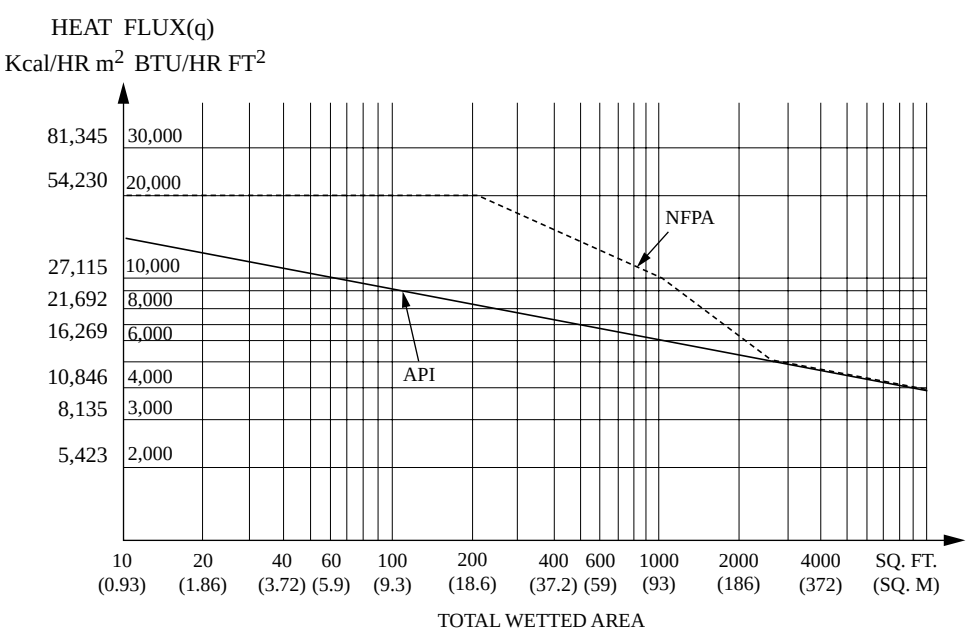

FIG. 7.15d
Heat flux estimates under fire conditions as a function of wetted area recommended by API and NFPA. The solid line is based on API RP 521 and can be used for regular tanks, which are provided with adequate drainage under fire conditions. The dotted line describes NFPA information for low-pressure tanks only. For tanks having over 2800 ft^2 in wetted area and with design pressures of 1 PSIG or less, NFPA suggests the fixed maximum heat input of 14,090,000 BTU/hr (3,553,000 kcal/hr).

© 2003 by Béla Lipták

TABLE 7.15e

Equations Recommended by NFPA Bulletin 30 for the Determination of Total Heat Absorption Q (BTU/hr) and for the Determination of Vent Rate of Free Air (SCHF), when Various Size Vessels, with Design Pressures Exceeding 1 PSIG and Containing Flammable Liquids, Are Exposed to External Fire

Wetted Tank Area (A in ft^2)	*Total Heat Absorption Due to Fire (Q in BTU/hr)*	*Equivalent Vent Rate of Free Air (Air Flow in SCFH at 14.7 PSIA and 60°F)*
20–200	$20{,}000FA$	$1{,}054FA$
200–1000	$199{,}300FA^{0.566}$	$10{,}500FA^{0.566}$
1000–2800	$963{,}400FA^{0.338}$	$50{,}730FA^{0.338}$
Over 2800	$21{,}000FA^{0.82}$	$1{,}107FA^{0.82}$

Note: For the NFPA recommended values of F, refer to Table 7.15j

TABLE 7.15f

NFPA's Heat Flux Recommendation for Low Pressure Tanks

Wetted Area in ft^2 (m^2)	*Design Pressure in PSIG*	*Heat Flux (q), BTU/hr/ft^2**
<200 (<18.6)	< or = 15	20,000F
200–1000 (18.6–93)	< or = 15	$199{,}300FA^{-0.434}$
1000–2800 (93–260)	< or = 15	$963{,}400FA^{-0.662}$
> or = 2800 (260)	From 1 to 15	$21{,}000FA^{-0.18}$
> or = 2800 (260)	< or = 1.0	14,090,000

*1 BTU/hr/ft^2 = 3.15 W/m^2

Note: For the NFPA recommended values of F, refer to Table 7.15j

where

V = cubic feet of free air per hour, SCFH, listed in Table 7.15f

λ = latent heat of vaporization of the specific liquid in units of BTU per pound

M_w = molecular weight of the specific liquid

For calculation convenience, a table of physical property constants presented in the National Fire Codes of the National Fire Protection Association is reproduced as Table 7.15h.

This calculation, based on Equation 7.15(6), has the potential for oversizing relief valves on vessels in crude oil and other multicomponent liquid applications where the components have a wide range of boiling points. *Latent heat of vaporization* depends on the specific liquid, and, for multicomponent liquids such as crude oil, it cannot be tabulated.

In the case of crude oil, the heat input is initially absorbed by the oil and steel (minor part) as the temperature of the vessel and oil rises. Initially, the specific heat of the oil absorbs the heat, and only a small portion of the heat input is utilized as latent heat generating vapor, which must be relieved. With constant heat input, the amount of vapor generated varies with the temperature of the oil in the vessel. Process calculations must be made to determine the true (maximum) rate of vapor evolution, taking into consideration the actual process fluid. This calculation must consider the worst-case situation when a particular vessel can be used to store different liquids.

TABLE 7.15g

Wetted Area vs. Cubic Feet of Free Air per Hour (14.7 PSIA and 60°F or 101.4 kPa and 15.6°c)

*Sq. Ft.**	*V = SCFH***	*Sq. Ft.**	*V = SCFH***
20	21,100	350	288,000
30	31,600	400	312,000
40	42,100	500	354,000
50	52,700	600	392,000
60	63,200	700	428,000
70	73,700	800	462,000
80	84,200	900	493,000
90	94,800	1000	524,000
100	105,000	1200	557,000
120	126,000	1400	587,000
140	147,000	1600	614,000
160	168,000	1800	639,000
180	190,000	2000	662,000
200	211,000	2400	704,000
250	239,000	2800	742,000
300	265,000	& over	742,000

*ft^2 = 0.093 m^2

**SCFH = 0.0283 m^3/hr

Wetted Area (A)

The factors that need to be considered in calculating the wetted area include the following:

1. The design basis, which can be API or NFPA
2. The tank shape, which can be horizontal, vertical, or spherical
3. The ground area of the fire zone
4. The effective fire height

While relief capacity determination is not directly impacted by it, the effect of fire on nonwetted surfaces can also cause structural failure from the steel softening at elevated temperatures. Thermal insulation or fire-resistant coatings,

© 2003 by Béla Lipták

TABLE 7.15h
*Relief Capacity Determination: Table of Constants**

Chemical	$\lambda\sqrt{M_w}$	*Molecular Weight (M_w)*	*Heat of Vaporization, BTU per lbm at Boiling Point (λ)*
Acetaldehyde	1673	44.05	252
Acetic acid	1350	60.05	174
Acetic anhydride	1792	102.09	177
Acetone	1708	58.05	224
Acetronitrile	2000	41.05	312
Acrylonitrile	1930	53.05	265
n-Amyl alcohol	2025	88.15	216
iso-Amyl alcohol	1990	88.15	212
Aniline	1795	93012	186
Benzene	1439	78.11	169
n-Butyl acetate	1432	116.16	133
n-Butyl alcohol	2185	74.12	254
iso-Butyl alcohol	2135	74.12	248
Carbon disulfide	1310	76.13	150
Chlorobenzene	1422	112.56	134
Cyclohexane	1414	84.16	154
Cyclohexanol	1953	100.16	195
Cyclohexanone	1625	98.14	164
o-Dischlorobenzene	1455	147.01	120
cis-Dechloroethylene	1350	96.95	137
Diethyl amine	1403	73.14	164
Dimethyl acetamide	1997	87.12	214
Dimethyl amine	1676	45.08	250
Dimethyl formamide	2120	73.09	248
Dioxane (diethylene ether)	1665	88.10	177
Ethyl acetate	1477	88.10	157
Ethyl alcohol	2500	46.07	368
Ethyl chloride	1340	64.52	167
Ethyl dichloride	1363	98.97	137
Ethyl ether	1310	74.12	152
Furan	1362	68.07	165
Furfural	1962	96.08	200
Gasoline	1370–1470	96.0	140–150
n-Heptane	1383	100.20	138
n-Hexane	1337	86.17	144
Hydrogen cyanide	2290	27.03	430
Methyl alcohol	2680	32.04	474
Methyl ethyl ketone	1623	72.10	191
Methyl methacrylate	1432	100.14	143
n-Octane	1412	114.22	132
n-Pentane	1300	72.15	153
n-Propyl acetate	1468	102.13	145
n-Propyl alcohol	2295	60.09	296

© 2003 by Béla Lipták

TABLE 7.15h Continued
*Relief Capacity Determination: Table of Constants**

Chemical	$\lambda\sqrt{M_w}$	Molecular Weight (M_w)	Heat of Vaporization, BTU per lbm at Boiling Point (λ)
iso-Propyl alcohol	2225	60.09	287
Tetrahydrofuran	1428	72.10	168
Toluene	1500	92.13	156
Vinyl acetate	1532	86.09	165
O-Xylene	1538	106.16	149

*One BTU/lb = 0.5556 kcal/kg

if not dislodged by the fire, can reduce the probability of vessel failure caused by steel softening.

API or NFPA As will be noted from the discussions in the paragraphs that follow, there are some differences between the recommendations of NFPA and API. For this reason, it is suggested that design engineers decide which set of recommendations are to be followed in designing the particular plant before considering the shapes of tanks or the expected fire height.

NFPA 58, Liquefied Petroleum Gases, Storage and Handling, requires the design engineer to calculate the wetted area on the basis of a 30-ft fire height above ground, whereas *API RP 520 and 521* require us to consider only a 25-ft fire height above the source of flame.

Tank Shape NFPA RP 521 recommends that, when a tank is exposed to external fire, its wetted area is to be calculated on the basis of a percentage of total exposed area of the vessel. This percentage is 55% for a sphere or spheroid, 75% of total exposed area of a horizontal tank, and the first 30 ft (9 m) above grade of a vertical tank.

API recommendations for calculations of wetted area are similar to NFPA's, except that, for a sphere or spheroid, the total exposed surface up to the maximum horizontal diameter or to a height of 25 ft (7.5 m) is used, whichever is greater. In case of distillation towers, normally, only the heights of liquid layers on the trays are considered in determining the wetted area.

Fire Zone When determining the wetted surface area that is exposed to an external fire, it is necessary to define the ground area of the fire, called the *fire zone.* According to API RP 521, the probable maximum ground area that a fire incident is likely to cover is 2,500 to 5,000 ft^2. For engineering design purposes, this area corresponds to that of a circle having a diameter of 55 to 80 ft.

When a PRV protects several vessels, the design engineers should be conservative and select, from the various possible fire zones, the fire zone (circle of 80 ft in diameter) that would include the largest total wetted surface area protected by that PRV. When several vessels share a single PRV for overpressure protection, no regular block valves are to be installed between them. The use of CSO valves is allowed.

Fire Height If *NFPA 58, Liquefied Petroleum Gases, Storage and Handling,* is selected as the basis of the design, the design engineer must calculate the wetted area on the basis of a 30-ft fire height above ground.

If *API RP 520 and 521* are used as the design basis for the plant, the design engineer must consider only a 25-ft fire height and measure that height, *not necessarily* from ground, but from above the source of flame. In other words, the API code requires the design engineer to also consider the possibility that a pool of flammable materials might accumulate at any elevation (other than ground) and catch fire.

In some cases, the NFPA and API recommendations can give substantially different results. To illustrate, take the example of a vertical tank with its bottom tangent line at 20 ft above ground and containing a 10 ft level of liquid so that the liquid surface is 30 ft above grade level. Let us also assume that, in this case, flammable materials can accumulate only at grade level and, therefore, the "source of flame" is at that level. In this case, the calculated wetted surface area using API will be half as much as if it were determined using the NFPA recommendations.

Vertical Tanks If the liquid level is above the bottom tangent line in a vertical vessel that is provided with an elliptical head, Equation 7.15(7) can be used to calculate its wetted surface (A_w) in square feet.

$$A_w = 1.089D^2 + \pi D[h - (SE\text{-}FH)] \qquad \textbf{7.15(7)}$$

where

A_w = the wetted surface area in ft^2
D = the diameter of the vertical tank in feet
h = the actual liquid level in the tank in feet
SE = the above grade liquid surface elevation in the tank in feet
FH = the fire height in feet (25 for API, 30 for NFPA)

If [h – (SE-FH)] is zero or negative, the vessel is above the effective fire height, so the fire case is not relevant.

© 2003 by Béla Lipták

Horizontal Tanks Equation 7.15(8) can be used if one desires to calculate the wetted surface area of a horizontal tank provided with ellipsoidal heads.

$$A_w = (2.178D^2 + \pi DL)(S/\pi D) \qquad \textbf{7.15(8)}$$

where

A_w = the wetted surface area in ft^2
D = the diameter of the horizontal tank in feet
L = the length of the cylindrical portion of the horizontal tank in feet
S = calculated by either Equation 7.15(9) or 7.15(10), depending on which is applicable

If the liquid level is below the centerline of the horizontal tank, Equation 7.15(9) is to be used. If the level is above, Equation 7.15(10) is applicable.

$$S = D.\text{Cos}^{-1}\{(D - 2[h - (SE\text{-}FH)])/D\} \qquad \textbf{7.15(9)}$$

$$S = D\{\pi - \text{Cos}^{-1}[(2[h - (SE\text{-}FH)] - D)/D]\} \qquad \textbf{7.15(10)}$$

where

D = the diameter of the horizontal tank in feet
h = the actual liquid level in the tank in feet
SE = the above grade liquid surface elevation in the tank in feet
FH = the fire height in feet (25 for API, 30 for NFPA)

If [h – (SE-FH)] is zero or negative, the vessel is above the effective fire height, so the fire case is not relevant.

Environmental Factors

If certain conditions are met, the value of the environmental factor (F) can be less than 1.0. These reduced values of F are listed in Table 7.15i and can be applied to the API recommended heat flux calculation in Equation 7.15(4) to reduce the required relieving capacity of the PRV. Another set of environmental factors is listed in Table 7.15j. These factors appear in the NFPA National Fire Codes.

TABLE 7.15i
API Recommended Environmental Factors (F) for Tank Installations

Type of Installation	*Factor (F)*
1. Bare vessel	1.0
2. Insulated vessels (listed below are three conductance values expressed in units of BTU/hr/ft^2/°F)	
Conductance of 4.0 (API – 1 insulation)	0.3
Conductance of 2.0 (API – 2 insulation)	0.15
Conductance of 1.0 (API – 4 insulation)	0.075
3. Water application facilities provided on bare vessels	1.0
4. Depressurizing and emptying facilities provided	1.0
5. Underground storage	0.0
6. Earth-covered storage above grade	0.03

Table 7.15j
NFPA Recommended Environmental Factors (F)

Installation	*Factor (F)*
Drainage in accordance with NFPA No. 30 (>1% slope) for tanks with over 200 ft^2 (18 m^2) of exposed wetted area	0.5
Approved water spray (water deluge system) in place	0.3
Approved fireproof insulation installed	0.3
Approved water spray (water deluge system), drainage, and approved (fireproof) insulation	0.15

These environmental factors are suggested values only, and whenever the conditions are not exactly as described in Tables 7.15i or 7.15j, the reader must exercise sound engineering judgment when applying them.

API's Environmental Factors As noted in Table 7.15i, API allows for more factors than does NFPA. A factor of 0.03 is used for earth-covered storage above grade, and a factor of 0.0 is used for underground storage. In addition, credit is given for the thickness and/or conductance of the insulation used. On the other hand, it should be noted that API does not allow credit for water application facilities on bare metal surfaces. Because of uncertainties in the reliability of effective water spray application systems, they feel that no reduction in environmental factors should be allowed.

To take insulation into account when determining heat flux, the insulation should be of the type that will not be damaged or removed by fire or firewater streams, exposing the bare metal surface to the fire. The means of fastening the insulation should be such that it will not fall because of the fusion of the banding material under fire conditions.

API and NFPA Environmental Factors Table 7.15i lists the environmental factors recommended by API, and Table 7.15j lists the NFPA ones. They both relate to the type of fireproof insulation and its thickness as used on the tank. As can be seen from Table 7.15i, API gives an estimate of environmental factors on the basis of insulation thickness; NFPA does not.

From the perspective of NFPA, for a tank insulation to qualify as "fireproof," it must function effectively while subjected to fire temperatures of 1000 to 2000°F for a period of 20 to 60 min. NFPA also requires that the insulation not be dislodged when impacted by firewater—it is to be held in place by stainless steel banding or jacketing. Table 7.15j also shows that NFPA gives credit both for having fireproof insulation and for drainage away from the tank.

The main difference between API and NFPA is that API does not allow credit for water deluge systems, but NFPA does. API's position is that the NFPA rules are too complicated and that the sprinkler systems are not sufficiently reliable. They

© 2003 by Béla Lipták

argue that the sprinklers are not regularly tested; they can freeze in northern regions and are often the first systems to be destroyed when a fire breaks out, because they are fragile.

Calculating the Relieving Capacity

The steps required to determine the relief capacity under fire conditions are as follows:

1. Establish wetted surface area (A_w) of the tank, considering its size, shape, and location within the fire zone.
2. Based on the selected code (API, NFPA, other) and on the type of thermal insulation, water spray, and other installation featured, select the applicable environmental factor F.
3. Based on the wetted surface area (A_w) and based on the selected code (API, NFPA, other), determine the equation to be used to calculate the total heat absorption due to fire. (The equation to be used can be 7.15(4), 7.15(5), or one of the equations in Tables 7.15e and 7.15g.)
4. Calculate the relief capacity required (W) by Equation 7.15(11) as follows:

$$W = Q/\lambda \qquad \textbf{7.15(11)}$$

where

W = the required relief capacity in pounds per hour (lb/hr)
Q = the total heat absorbed by the tank, calculated by Equation 7.15(4), 7.15(5), or by one of the equations in Tables 7.15e and 7.15g
λ = the latent heat of vaporization at relieving conditions of the liquid in the tank to be protected by the PRV that is being sized. (For calculation convenience, a table of physical property constants presented in the National Fire Codes of the National Fire Protection Association is reproduced in Table 7.15h.)

Latent Heat of Vaporization When sizing PRVs to protect tanks that contain multicomponent hydrocarbon liquids, there is no accurate way to determine the latent heat of vaporization. The actual process during a fire condition is one in which the lighter hydrocarbon components will vaporize first, and the heavier components will follow. Because the latent heat of vaporization varies with not only the composition of the boiling liquid but also with the relieving temperature and pressure, only approximations can be made.

Computer simulation software, if available, is the preferred method of obtaining the latent heat for sizing the PRV that is to protect a multicomponent hydrocarbon storage vessel. These simulations are usually based on the assumption that anywhere from 70 to 95% of the hydrocarbons are still in the liquid state in the vessel when the latent heat is calculated.

When computer simulation is not available, the design engineer can refer to API RP 521, in which the vapor pressure and heat of vaporization of pure, single-component paraffin hydrocarbon liquids are given in Figure A1. Using the relieving pressure and the average molecular weight of the multicomponent hydrocarbon liquid, one can use this chart to estimate the latent heat of vaporization of the mixture at relieving conditions.

Protecting Liquid-Full Tanks

When a liquid-full vessel is exposed to external fire, the relieving process will be initiated by the thermal expansion of the liquid. This will be followed by a period during which both liquid and vapor are simultaneously relieved. This continues until enough vapor space is created for vapor-liquid disengagement in the vessel, which usually starts when 1 or 2 ft of vapor space is cleared.

The PRV for such a liquid-full tank is sized for this last, all-vapor relieving phase, because the relieving area requirement of thermal expansion is small, and the time period of two-phase relieving is short. When a liquid-filled tank is connected to another vessel with a vapor space in it, the control and check valves in the connecting piping should be carefully evaluated. As to the selection of the set pressure of the PRV, it is recommended to base it on the design pressure of the tank's bottom minus the hydrostatic head of the liquid column.

Fluids at the Critical Point If the latent heat of a hydrocarbon mixture is approaching zero, and the sensible heat dominates its behavior, it is said to be at or near the critical point. If, under the relieving conditions, the liquid in a pressure vessel is above the critical point, it should be handled as a gas. If the process fluids under the relieving conditions are below the critical region, and there is no accurate latent heat value available, API RP 520 allows the use of an approximate latent heat of 50 BTU/lb.

Once the design heat flux is determined, calculations are made to determine the rate of thermal expansion of the vessel contents. To calculate this properly, the gas specific heat and the gas compressibility factor must be known. It is inadequate to assume the vapor to be an ideal gas, because, just above the critical point, the compressibility factor of the vapor changes very rapidly. The maximum required valve capacity is often determined not at the critical point but at some point above it where the change in vapor compressibility is less drastic.

It should be noted that, under these conditions, the metal wall of the vessel will rapidly approach the flame temperature and will fail prematurely, because it is not being cooled by the latent heat of vaporization of the boiling liquid contents of the tank. Under these conditions, it is advisable to protect the metal surface of the tank with a cooling water spray to prevent premature failure.

NONFIRE PROTECTION OVERPRESSURE

The possible nonfire causes of overpressure can be utility failures, thermal expansion, blocked outlets, valve or process control failure, equipment failure, runaway chemical reac-

© 2003 by Béla Lipták

tions, and human errors. In the following paragraphs, the topics of thermal expansion and blocked outlets are discussed.

Thermal Expansion

When a liquid filled system is blocked in and heated, the resulting expansion can cause very high pressures. The heat source of thermal expansion can be a heater, heat exchanger, or heat tracing, or it can be solar or other radiant heat or external fire.

Thermal-expansion PRVs should be installed if a section of the process can be blocked in during maintenance or shutdown. If the plant uses strictly enforced and checked procedures to drain all liquid filled vessels during shutdown, the need for thermal-expansion PRVs is reduced, but human error can never be fully eliminated. Therefore, if the blocked-in section contains toxic or environmentally hazardous materials, the installation of thermal-expansion PRVs is recommended.

On the other hand, no metal seated block valve can provide 100% bubble-tight closure. Therefore, if the blocked-in pipe section is of small diameter and less than 100 ft in length, the required thermal expansion relieving capacity is less than the leakage of the block valve, so a thermal relief valve is not required.

In addition, thermal-expansion PRVs are not required on pipelines that cannot be blocked in or that cannot be heated by any heat source other than the ambient and are normally operating at a temperature exceeding the ambient. Thermal expansion relief valves also are not required if the blocked-in pipe or equipment is not liquid full but has a vapor pocket.

When thermal-expansion PRVs are required, and the trapped in liquid is toxic, corrosive, volatile, or flammable, the PRV must discharge into a closed receiver. Environmentally safe liquids such as water can be discharged directly into a sewer.

Set Pressure and Sizing The set pressure of a thermal-expansion PRV must be high enough that the valve will open only as a result of thermal expansion. In selecting the set pressure, the design engineers should carefully evaluate the backpressure that might be acting on the valve; if it is variable, the selected PRV should be provided with balanced bellows.

If the protected volume is small, sizing calculations need not be performed, and it is sufficient to install a 1/2 × 3/4-in. or 3/8 × 1-in. nominal thermal relief valve. When large vessels or long, large-diameter pipelines are to be protected against thermal expansion, the required relief capacity in GPM (without vaporization) can be calculated using Equation 7.15(12).

$$GPM = BQ/500(SpG)(Cp) \qquad \textbf{7.15(12)}$$

where

B = the cubical expansion coefficient per °F for the liquid at the expected temperature (typical values are 0.0001 for water, 0.0004 for hydrocarbons <34.9°API gravity, 0.0005 for 35 to 50.9, 0.0006 for 51 to 63.9, 0.0007 for 64 to 78.9, 0.0008 for 79 to 88.9, and so on)

Cp = the specific heat of the trapped in liquid on the cold side in BTU/°F

GPM = the thermal expansion relief rate required in GPM at flowing temperature

Q = the total heat transfer rate in BTU/hr

SpG = the specific gravity of the process fluid referred to water at 60°F = 1.0

Blocked Outlet Conditions

Whenever an inlet stream pressure can exceed the maximum allowable working pressure of the receiving tank or other equipment, overpressure protection is needed in case of outlet blockage. The blocking of the outlet line can be caused by instrument air or power failure, by control valve malfunction, or by inadvertent valve operation.

The set pressure of the PRV should be selected to correspond to the design pressure at the bottom of the tank minus the hydrostatic head above it. The discharge piping of the PRV should have no pockets. It is advisable to install bleeding valves at the lowest points to eliminate liquid accumulation. When liquid discharges to a flare header, the sizing of the flare header should take the total volume of the discharged liquid into consideration.

Sizing the PRV PRVs must always be installed on the outlets of compressors and of positive displacement pumps. These PRVs should be sized for the rated capacity of the compressor or pump. On other sources, a PRV is required only if the source pressure can be higher than the maximum allowable working pressure of the protected equipment or tank. A PRV is not required if the outlet cannot be blocked. When CSO valves are used, the system is assumed to be not blocked.

The required sizing capacity for blocked-outlet PRVs is not always the normal flow rate of the blocked line.[1] When the liquid outlet is blocked, the PRV has to relieve the liquid accumulation, which might fluctuate. At high levels in the protected tank and with two-phase input, the vapor-liquid separation can become impossible, and the PRV can also be relieving a two-phase flow.

Therefore, when the vessel has a large liquid inventory, it is important to provide the tank with a void space corresponding to 10 to 15 min of inlet flow. This way, after a blockage, the operator will have some time to prevent the level from further increasing. An even safer approach is to provide a high-level alarm when the remaining residence time above the liquid level drops to, say, 20 min, and in addition, install a high-high level alarm when it drops to 15.

PROCESS EQUIPMENT CONSIDERATIONS

In the following paragraphs, some unit-operation related advice will be given on how to protect such equipment as low-pressure tanks, heat exchangers, pumps and compressors,

© 2003 by Béla Lipták

distillation towers, pipe headers, and chemical reactors against overpressure, and how to design their PRV installations.

Low-Pressure Storage Tanks

In designing the "breathing" of atmospheric storage tanks, there are two considerations. One is the need to vent the displaced air when liquid is being pumped into the vessel, and the other is the need to admit air into the tank when liquid is being pumped out of the vessel. This "breathing" is needed to (a) prevent over-pressure while pumping liquid in and (b) collapsing the vessel as a result of vacuum when liquid is being pumped out and the corresponding volume is not replaced with air.

Quoting once again the API Guide for Tank Venting, RP-2000, the following recommendations apply:

- *Inbreathing*—8 scfh (0.226 m^3/hr) air for each gpm (3.78 lpm) of maximum emptying rate
- *Outbreathing*—8.5 scfh (0.24 m^3/hr) air for each gpm (3.78 lpm) of maximum filling rate for fluids with a flashpoint of 100°F (37.8°C) or higher, and 17 scfh (0.48 m^3/hr) air for each gpm (3.78 lpm) of maximum fill rate for fluids with a flashpoint below 100°F (37.8°C)

Thermal Venting Capacity In addition to pumping, provision must be made to accommodate the thermal venting requirements of the vessel. This is defined as the expansion or contraction of the vapors in the tank resulting from changes in the tank's ambient temperature. For example, at the beginning of a rainstorm, the vapors in the tank would cool and contract. Under such conditions, to avoid creating a vacuum in the atmospheric tank, additional air must be admitted into the vapor space of the tank.

The API recommendations are based on an in-breathing capacity of 2 ft^3 of air per hour per square foot (0.61 $m^3/hr/m^2$) of total shell and roof area for very large tanks (a capacity of more than 20,000 barrels or 3180 m^3). For tanks with a capacity of less than 20,000 barrels (3180 m^3), an in-breathing requirement of 1 ft^3 of air per hour (0.028 m^3/hr) for each barrel (0.158 m^3) of tank capacity is recommended. This capacity is based on a rate of change of vapor space temperature of 100°F (37.8°C) per hour. This maximum rate of temperature change is assumed to occur during such events as a sudden cold rain.

It is assumed that the tank roof and shell temperatures cannot rise as rapidly as they can drop under any conditions. It is further assumed that, for liquids with a flashpoint of 100°F (37.8°C) or above, the thermal out-breathing requirement has been assumed to be 60% of the in-breathing capacity requirement.

For materials with a flashpoint below 100°F (37.8°C), the thermal out-breathing requirement has been assumed to be equal to the in-breathing requirement. This allows for vaporization of the liquid and for the fact that the specific gravity of the vapors in tanks containing volatile hydrocarbons is greater than air. The thermal venting capacity requirements as recommended by API were given in Table 7.15g.

The total in-breathing and out-breathing requirements of a tank should always be calculated as the sum of the thermal venting capacity requirements and the requirements to compensate for in or out pumping rates.

Heat Exchangers

Heat exchangers are a class of process equipment requiring special relief considerations because of the potential need for protection against thermal expansion, external fire, blocked outlets, and tube rupture cases.

Blocked-In Exchangers Heat exchangers frequently have valves located on both their inlet and outlet piping. When these valves are all closed, the exchanger is "blocked in." If the cold side of the heat exchanger can be blocked in, relief devices are installed to provide protection against thermal expansion of liquids in the exchanger. This is always done for the cold side of an exchanger, where the liquid can be heated by the hot fluid on the other side or can be heated by ambient temperature while sitting with the inlet and outlet valves closed.

No relief device is necessary for the protection of either side of an exchanger that cannot be blocked in. In such installations, it is assumed that the relief of the unit is taken care of by the relief device on the related tank or equipment.

Liquid Refrigerants In the case of liquid refrigerants, a relief device should always be provided for the protection of the refrigerant side if that side can be blocked in and if the vapor pressure of the refrigerant, when its temperature rises to that of the hot side, exceeds the design pressure of the exchanger. This is also done whenever the vapor pressure of the material flowing at 100°F (37.8°C) is greater than the design pressure of the exchanger. This recommendation is somewhat site specific and is based on an assumed (maximum) ambient temperature of 100°F (37.8°C); this temperature may lower for some geographical areas.

Gas-Fired Tubular Heaters Direct gas-fired tubular heaters are always protected by relief valves on their tube side. The valve is normally sized for the design heat transfer rating of the heater and must initially handle a fluid rate corresponding to the rate of thermal expansion in the tubes when they are blocked in.

When designing fired heaters, there should be no block valve on its outlet. This is because PRVs for high-temperature services exceeding 550°F are not available with dependable seat and seal materials.

Tube Rupture Consideration should be given to relief protection of low-pressure equipment in the event that an

© 2003 by Béla Lipták

exchanger tube ruptures because of corrosion, vibration, or thermal shock. ASME Code, Section VIII, Division 1, Paragraph UG-133(d) require such protection.

This consideration is particularly critical when the low-pressure side design pressure is less than the operating pressure on the high-pressure side. In terms of high- and low-pressure side design pressures, PRV protection against tube rupture is recommended if the design pressure of the low-pressure side is less than 77% of the high-pressure side design pressure.

Reference 2 provides some advice on the sizing of PRVs to protect against overpressure caused by tube rupture. The PRV, which is to protect the exchanger, should be located directly on the exchanger or very close to it.

Pumps and Compressors

Reciprocating compressors should be protected against overpressure on the discharge side in case the discharge piping can be blocked. In the case of positive displacement pumps, a relief device is required to relieve the pumped liquid when the discharge line is blocked in. This relief device is sometimes provided as an integral part of the pump.

The routing of the discharge from the PRVs should be carefully evaluated. In many cases, directing the relieved fluid back to the pump or compressor suction may result in dangerous overheating of the fluid because of the work input by the pump or compressor. This may result in unit overheating, fluid vaporization, seal failure, and so on.

Sizing In sizing the PRV, the type of pumping equipment must be taken into consideration. In the case of rotary pumps with a fairly uniform instantaneous flow rate, the PRV is sized for the rated pump capacity.

In the case of reciprocating pumps, consideration must be given to the fact that the rated flow rate is the average of the total stroke of the piston. It is suggested that, for a single-piston pump, four times the average flow rate be used as the basis for relief sizing. With a duplex or triplex pump, there is some flow averaging, and the engineer must exercise safe judgment.

In general, the PRV should be sized for the maximum capacity that the pump or compressor can generate. Therefore, the design engineer should always consider the maximum impeller size and 105% of the normal speed of the compressor or pump in selecting the sizing capacity.

Set Pressure The design pressure of the weakest part of the system downstream should determine the pressure setting of the relief device used. This may be the design pressure of the pump casing, the design pressure of some valve or equipment in the line, or another appropriate specification. Normally, a set pressure is selected to be below this limit but high enough that the PRV will not open under normal operating conditions.

In the case of turbine pumps, relief devices are generally provided to protect the pump, the associated piping, and the equipment that may be blocked in. In the case of centrifugal-type pumps, it is uncommon that the maximum pump shutoff pressure would exceed the maximum allowable working pressure (MAWP) of any system components, but the design engineer still must fully evaluate the overpressure possibilities.

Distillation Towers

Several conditions and combinations of conditions can result in the overpressure of distillation columns. These can include the failure of power, instrument air, reflux, cooling water, control system, and control valves. Other causes can include abnormal heat input, tube rupture, blocked outlets, and thermal expansion.

In evaluating the above conditions, one must always ask, "When this failure occurs, will the feed, the steam flow to the reboiler, the cooling water flow, etc. continue, or will it stop?" The answers to such questions will help determine if secondary effects such as overhead condenser flooding also need to be considered in the safety analysis.

In all distillation towers, there is a normal heat input at the column reboiler. The vapors generated are normally condensed in an overhead condenser. In the event of the failure of cooling water or cooling medium to the overhead condenser (or a failure of the fan drive unit on air-cooled condensers), a dangerous overpressure situation may develop because of the continued generation of vapors in the reboiler. A relief device must be added to relieve the vapors thus generated, and this PRV is generally rated for the normal heat input of the reboiler.

Overpressure can also develop when the source of heat is continuous and the overhead vapor line from the column is accidentally blocked. In this case, a relief device must relieve the vapors as they are generated by the column reboiler.

Reflux failure to a column where reflux acts as a coolant may also cause an overpressure condition. Similarly, loss of feed may result in an overpressure condition, especially if the reboiler continues to operate when the feed has stopped.

Pipe Headers

The design engineer must always consider that automatic control systems do fail and can accidentally subject some equipment to pressures exceeding their design pressures. Such an overpressure condition can occur because of the failure of steam pressure reducing stations. To illustrate this, assume a case in which high-pressure steam (150 PSIG, or 1035 kPa) is reduced to a lower pressure (30 PSIG, or 207 kPa). Should this control station fail as a result of the control valve sticking open, all equipment connected to the low-pressure steam header could be subjected to high pressure. In such case, a relief device is normally placed on the low-

© 2003 by Béla Lipták

pressure header near the pressure-reducing control valve and is rated for the maximum capacity of that control valve.

As another example, liquid from a high-pressure source may be admitted to a vessel that is operating under either level or flow control. Should the control valve fail, the equipment downstream of the control valve may be subjected to pressures in excess of its design pressure. Here again, relief devices capable of handling the maximum flow through the control valves involved need to be provided.

Bypass Valves When considering overpressure conditions caused by control valve failure, it is also prudent to evaluate the impact of bypass valves around control valves that can be open or partially open. Unless the bypass valves are sealed closed, there can be situations where the bypass valves are intentionally used to obtain additional capacity.

Alternatively, performing maintenance or testing on the control valve while the process is in operation could result in a situation in which the bypass valve is open and the control valve fails open. In considering these possibilities, a conservative approach is to size the relief capacity on the basis of the combined Cv of the control valve and the bypass valve.

However, this oversizing can cause problems such as causing chatter in the relief valve. This dilemma must be resolved based on the individual circumstances for each installation, including an assessment of operating and maintenance practices. The capacity of the process piping should also be examined, because the piping may actually be the limiting factor if a combined Cv approach is used in sizing the relief valve.

Chemical Reactors

Protecting chemical reactors from overpressure is probably the most complex task in process safety design. It is that complicated because of the possibility of runaway reactions, and because the speed of response of some conventional PRVs might not be fast enough to match them. As a result, special (explosive actuated) PRV designs may be needed.

What makes chemical reactors unique among the unit operations in a processing plant is that "runaway" exothermic reactions can occur in them. An example of such a case is a polymerization reactor in which cooling water or agitator failure can cause a runaway reaction. The sizing problems fall into two categories.

The first problem is that it is difficult and sometimes impossible to determine the actual rate of heat evolution during a runaway reaction, because data are often not available for such a condition at high relief temperatures. The second problem is that the PRV does not usually relieve a pure vapor stream but a mixture of liquids, gases, and solids.

When sizing such a relief valve, one approach[3] first recommends the determination of the rate of heat evolution and the conversion of this heat to equivalent vapor generation.

TABLE 7.15k
Relief Valve Sizes for PVC Reactors

Nominal Reactor Volume, gal (l)	*Relief Valve*	*Orifice Area, in.^{2} (mm^2)*	*In.^{2}/gal (mm^2/l)*
1000 (3780)	2J3	1.287 (830)	0.0013 (0.2218)
2500 (9450)	3L4	2.85 (1,838)	0.0012 (0.2048)
3750 (14,175)	4P6	6.38 (4,115)	0.0017 (0.2901)
5200 (19,656)	4P6	6.38 (4,115)	0.0012 (0.2048)

When this vapor volume is determined, the PRV is sized under the assumption that the relief device will vent this calculated volume as 100% liquid. This approach appears to be safe and conservative. In these cases, the relief devices sometimes are sized based on past practice. Table 7.15k presents typical relief sizes for PVC reactors as an example.

In cases where relief requirements cannot be quantitatively determined, the design engineer should be careful to use simplifying assumptions that will lead to conservative results.

Discharging the PRVs

The selected discharge system should be a function of the process fluid handled. The following types of discharges are allowable to be sent to open collection systems or to the atmosphere:

1. Vapors that are lighter than air and are not toxic, flammable, or hazardous to humans or the environment can be discharged.
2. Water or nontoxic, nonflammable liquids from waste heat boilers and thermal relief systems can be discharged into open collection systems before further treatment and discharge into the sewer.
3. Local regulations also allow some specific gases/vapors to be discharged to the atmosphere in certain limited volumes.

Discharging to Closed Locations

The PRV discharge must be sent to a closed location in the following cases:

1. The discharged vapor is toxic, corrosive, or flammable and/or will condense at atmospheric conditions.
2. The discharged vapor is heavier than air or is flammable, toxic, or hazardous either to humans or the environment.
3. The discharged fluid is liquid or partially liquid and is toxic, flammable, corrosive, high temperature, or otherwise hazardous to humans or the environment.
4. The discharged amount/volume would exceed local regulations.

© 2003 by Béla Lipták

When the PRVs are discharged into a closed system, they are sent through a manifold and blowdown drum to a flare system. The blowdown drum separates the liquids from the vapors. The vapors are then sent to the flare system while the liquids are pumped to the treatment and disposal system. In a processing plant, there can be flare header systems for different pressures or for different types of process materials, such as, for example, a separate H_2S flare header or other system.

CONCLUSIONS

Overpressure analysis is more art than science. The design engineer must always exercise care and sound judgment when determining the sizing basis for relief capacity determination. There are so many combinations of installations and circumstances that it is beyond our scope here to do much more than present some generalized advice and a fairly long list of further reading material in the bibliography.

In many cases, it is necessary to calculate relief capacity requirements based on a combination of several considerations, such as fire, cooling water failure, runway reactions, etc., and determine which will require the largest relief device. There can also be installations where the relief capacity requirements based on fire and those based on some other consideration should be additive, because both conditions are likely to exist simultaneously.

Concurrently, the engineer must be aware that oversizing of relief valves can also present problems such as chattering, which creates a dilemma in relief valve sizing and selection. Computer simulations can be very valuable in specific cases, such as when the relieving conditions are near critical. On the other hand, one should always remember that software packages are only as good as the programmer who has prepared them and are applicable only under the same conditions and for the same equipment configuration for which they have been prepared.

TERMINOLOGY AND NOMENCLATURE

Accumulation. This is the pressure increase over the maximum allowable working pressure of a tank or vessel during discharge through the pressure relief valve. It is given as a percentage of the maximum allowable working pressure or in pressure units (e.g., bars or pounds per square inch).

Backpressure. Pressure on the discharge side of a pressure relief valve. This pressure is the sum of the superimposed and the built-up backpressures. The superimposed backpressure is the pressure that exists in the discharge piping of the relief valve when the valve is closed.

Balanced safety relief valve. A safety relief valve with the bonnet vented to atmosphere. The effect of backpressure on the performance characteristics of the valve (set pressure, blowdown, and capacity) is much less than on the conventional valve. The balanced safety relief valve is made in three designs: (1) with a balancing piston, (2) with a balancing bellows, and (3) with a balancing bellows and an auxiliary balancing piston.

Blowdown (blowback). The difference between the set pressure and the reseating (closing) pressure of a pressure relief valve, expressed in percent of the set pressure or in bars or pounds per square inch.

Built-up backpressure. Variable backpressure that develops as a result of flow through the pressure relief valve after it opens. This is an increase in pressure in the relief valve's outlet line caused by the pressure drop through the discharge headers.

Chatter. Rapid, abnormal, reciprocating variations in lift during which the disc contacts the seat.

Cold differential test pressure (CDTP). The pressure at which the PRV is adjusted to open during testing. The CDTP setting includes the corrections required to consider the expected service temperature and backpressure.

Constant backpressure. Backpressure that does not change under any condition of operation, regardless of whether the pressure relief valve is closed or open.

Closing pressure (reseat pressure). The pressure, measured at the valve inlet, at which the valve closes, flow is substantially shut off, and there is no measurable lift.

Conventional safety relief valve. A safety relief valve with the bonnet vented either to atmosphere or internally to the discharge side of the valve. The performance characteristics (set pressure, blowdown, and capacity) are directly affected by changes of the backpressure on the valve.

Design pressure. This pressure is equal to or less than the maximum allowable working pressure. It is used to define the upper limit of the normal operating pressure range.

Effective coefficient of discharge. This is a coefficient used to calculate the minimum required discharge area of the PRV.

Flutter. Rapid, abnormal, reciprocating variations in lift during which the disc does not contact the seat.

Lift. The rise of the disc in a pressure relief valve.

Maximum allowable operating pressure (MAOP). The maximum pressure expected during normal operation.

Maximum allowable working pressure (MAWP). This is the maximum pressure allowed for continuous operation. As defined in the construction codes (ASME B31.3) for unfired pressure vessels, it equals the design pressure for the same design temperature. The maximum allowable working pressure depends on the type of material, its thickness, and the service conditions set as the basis for design. The vessel

© 2003 by Béla Lipták

may not be operated above this pressure or its equivalent at any metal temperature other than that used in its design; consequently, for that metal temperature, it is the highest pressure at which the primary pressure relief valve can be set to open.

Operating pressure. The operating pressure of a vessel is the pressure, in pounds per square inch gauge, to which the vessel is usually subjected in service. A processing vessel is usually designed for a maximum allowable working pressure, in pounds per square inch gauge, that will provide a suitable margin above the operating pressure to prevent any undesirable operation of the relief device. It is suggested that this margin be approximately 10% or 25 PSI (173 kPa), whichever is greater. Such margin will be adequate to prevent the undesirable opening and operation of the pressure relief valve caused by minor fluctuations in the operating pressure.

Operating pressure margin. The margin between the maximum operating pressure and the set pressure of the PRV.

Operating pressure ratio. The ratio of the maximum operating pressure to the set pressure of the PRV.

Overpressure. This is the pressure increase over the set pressure of the primary relief device. When the set pressure is the same as the maximum allowable operating pressure (MAOP), the accumulation is the same as the overpressure. Pressure increase over the set pressure of the primary relieving device is overpressure. Note: from this definition, it will be observed that, when the set pressure of the first (primary) safety or relief valve is less than the maximum allowable working pressure of the vessel, the overpressure may be greater that 10% of set pressure.

Pressure-relieving device. The broadest category in the area of pressure relief devices, it includes rupture discs and pressure relief valves of both the simple spring-loaded type and certain pilot-operated types.

Pressure relief valve (PRV). A generic term that might refer to relief valves, safety valves, and pilot-operated valves. The purpose of a PRV is to automatically open and relieve the excess system pressure by sending the process gases or fluids to a safe location when its pressure setting is reached.

Rated relieving capacity. This is the maximum relieving capacity of the PRV. This rating is normally provided on the nameplate of the PRV. The rated relieving capacity of the PRV exceeds the required relieving capacity and is the basis for sizing the vent header system.

Relief valve. An automatic pressure-relieving device actuated by the static pressure upstream of the valve, which opens in proportion to the increase in pressure over the operating pressure. It is used primarily for liquid service.

Relieving pressure (opening pressure plus overpressure). The pressure, measured at the valve inlet, at which the relieving capacity is determined.

Reopening pressure. The opening pressure when the pressure is raised as soon as practicable after the valve has reseated or closed from a previous discharge.

Safety relief valve. An automatic pressure-actuated relieving device suitable for use as either a safety or relief valve.

Safety valve. An automatic pressure-relieving device actuated by the static pressure upstream of the valve and characterized by rapid and full opening or pop action. It is used for steam, gas, or vapor service.

Seal-off pressure. The pressure, measured at the valve inlet after closing, at which no further liquid, steam, or gas is detected at the downstream side of the seat.

Set pressure (opening pressure). The pressure at which the relief valve is set to open. It is the pressure measured at the valve inlet of the PRV at which there is a measurable lift or at which discharge becomes continuous as determined by seeing, feeling, or hearing. In the pop-type safety valve, it is the pressure at which the valve moves more in the opening direction as compared to corresponding movements at higher or lower pressures. A safety valve or a safety relief valve is not considered to be open when it is simmering at a pressure just below the popping point, even though the simmering may be audible.

Simmer (warn). The condition just prior to opening at which a spring-loaded relief valve is at the point of having zero or negative forces holding the valve closed. Under these conditions, as soon as the valve disc attempts to rise, the spring constant develops enough force to close the valve again.

Start-to-leak pressure. The pressure at the valve inlet at which the relieved fluid is first detected on the downstream side of the seat before normal relieving action takes place.

Superimposed backpressure. Variable backpressure that is present in the discharge header before the pressure relief valve starts to open. It can be constant or variable, depending on the status of the other PRVs in the system.

Variable backpressure. Backpressure that varies as a result of changes in operation of one or more pressure relief valves connected to a common discharge header.

References

1. Wong, W. Y., Consider two-phase relief for liquid blockage of flash drums, *Hydrocarbon Process.*, December 1997.
2. Wong, W. Y., PRV sizing for exchanger tube rupture, *Hydrocarbon Process.*, February 1992, and Capacity credit calculation for exchanger tube rupture, *Hydrocarbon Process.*, December 1992.
3. Boyle, W. J., *Sizing relief area for polymerization reactors,* 61st AIChE National Meeting, Houston, TX.

© 2003 by Béla Lipták

Bibliography

Andrews, D. C., Industry views on chemical process safety, *Process Safety Prog.*, 12(2), April 1993.

Ahmad, A. A., Pressure relief systems: the sensible approach to verification and documentation, *Process Safety Prog.*, 16(1), Spring 1997.

Ahmad, S. M., Ease relief system design and documentation, *Chem. Eng. Prog.*, May 2000.

API Recommended Practice 520, Parts I and II, *Sizing, Selection, and Installation of Pressure-Relieving Devices in Refineries*, 7th ed., American Petroleum Institute, Washington, D.C., January 2000.

API-RP-521, *Guide for Pressure-Relieving and Depressuring Systems*, 4th ed., American Petroleum Institute, Washington, D.C.

API Standard 526, *Flanged Steel Safety Relief Valves*, American Petroleum Institute, Washington, D.C.

API-RP-2521, *Use of Pressure-Vacuum Vent Valves for Atmospheric Pressure Tanks to Reduce Evaporation Loss*, American Petroleum Institute, Washington, D.C.

ASME Boiler and Pressure Vessel Code, Section I (Power Boilers), Section IV (Low Pressure Heating Boilers), Section VIII (Pressure Vessels-Division l), 2001 ed., 2002 addenda, American Society of Mechanical Engineers, New York.

Bernstein, M. D. and Bloomfiel, W. J., Malfunctions of safety valves due to flow induced vibrations, ASME Pressure Vessel and Piping Conference, PVP-154, 1989.

Bilanin, A. J. and Teske, M. E., *Modeling Flow through Spring-Loaded Safety Valves*, ASME Publication PVP-190, 1990.

Brahmbhatt, S. R., Are liquid thermal-relief valves needed? *Chem. Eng.*, International ed., 91(10), 69–71, May 14, 1984.

Burns, M. L., Jr., The practical application of flow test data for safety relief valves and rupture discs used in combination, Paper C 380/84, I Mech E Conference Publications, 1984.

Coker, A. K., Program sizes compressible flow for discharge piping, *Oil and Gas J.*, 87(50), December 11, 1989.

Constantinescu, S., Sizing gas pressure-relief nozzles, *Chem. Eng.*, International Ed. 92(9), 85–86, April 29, 1985.

Crozier, R. A., Jr., Sizing relief valves for fire emergencies, *Chem. Eng.*, International Ed. 92(22), 49–54, October 28, 1985.

Cunningham, E. R., Keeping fluid handling systems safe with overpressure protection, *Plant Eng.*, 39(3), 34–39, February 14, 1985.

Dockendorff, R. L., Relief valve solves desalter problem, *Oil and Gas J.*, May 1980.

Emerson, G. B., Pressure relief valve types and selection, *Hydrocarbon Process.*, International ed., 67(5), 71–72, May 1988.

Emerson, G. B., Pressure relief valves: some selection guidelines, *InTech*, 33(2), 51–54, February 1986.

Ewan, B. C. R. and Moatamedi, M., Design considerations to prevent heat exchanger failure, *Hydrocarbon Process.*, 66, November 2000.

Fauske, H. K., Properly size vents for nonreactive and reactive chemicals, *Chem. Eng. Prog.*, February 2000.

Friedel, L. and Purps, S., Models and design methods for sudden depressurization of gas/vapour-liquid reaction systems, *Int. Chem. Eng.*, 26(3), 390–407, July 1986.

Frundt, J. et al., Pressure relief with highly viscous fluids, *Process Safety Prog.*, 16(1), Spring 1997.

Going, W. S. and Pringle, R. E., Safety Valve Technology for the 1990s, Soc. Petroleum Eng. of AIME, Conference 12667, Richardson, TX, 1989.

Guide for Inspection of Refinery Equipment, Chapter XVI, Pressure relieving devices, American Petroleum Institute, Washington, D.C.

Huff, J. E., Multiphase flashing flow in pressure-relief systems, *Plant Operations Prog.*, 4(4), 191–199, October 1985.

Jones, B. G. and Duckett, R. C., Thermographic survey of the integrity of a process plant pressure relief system, *Plant Operations Prog.*, 4(3), 161–163, July 1985.

Kletz, T., *What Went Wrong? Case Studies of Process Plant Disasters*, Gulf Publishing, Houston, TX, May 2001.

Lai, Y. S., *Conventional Spring-Loaded Safety Relief Valves Subjected to Back Pressure*, ASME Publication PVP–180, New York, 1989.

Lees, F. P., *Loss Prevention*, Gulf Publishing, Houston, TX, September 1996.

Leung, J. C., The omega method for discharge rate evaluation, Int. Symp. on Runaway Reactions and Pressure Relief Design, American Institute of Chemical Engineers, New York, 1995.

Moodie, K., Cowley, L. T., Denney, R. B., Small, L. M., and Williams, I., Fire engulfment test on a 5 tonne LPG tank, *J. Haz. Mat.*, 20, 55–71, December 1988.

Morley, P. G., Sizing pressure safety valves for gas duty, *Chem. Eng.* (Rugby-GB), 463(21), 23–24, August 1989.

Muser, W. and Schauki, N., *New Requirements for Safety and Relief Valves*, ASME Pressure Vessel & Piping Division, PVP-180, 107–110, 1989.

National Board Inspection Code, *A Manual for Boiler and Pressure Vessel Inspectors*, National Board of Boiler and Pressure Vessel Inspectors, Columbus, OH.

NFPA 68, *Guide for Venting of Deflagrations*, 2002 ed., National Fire Protection Association, Quincy, MA.

Nayfeh, A. H. and Bouguerra, H., Non-linear response of a fluid valve, *Int. J. Non-Linear Mechanics*, 25(4), 1990.

Papa, D. M., How back pressure affects safety relief valves, *Hydrocarbon Process.*, 62(5), 79–81, May 1983.

Pressure Relief and Effluent Handling Systems, Center for Chemical Process Safety of AIChE, New York, 1998.

Puleo, P. A., Relief valve or rupture disc? *Fire Protection Manual for Hydrocarbon Processing Plants*, Gulf Publishing, Houston, TX.

Sallet, D. W., Two-phase flow aspects in sizing pressure relief valves, ASME, *Safety Relief Valves*, PVP–33, 1979.

Sallet, D. W. and Somers, G. W., Flow capacity and response of safety relief valves to saturated water flow, *Plant Op. Prog.*, 4(4), 207–216, October 1985.

Sumathipala, K. et al. Two-phase swelling and entrainment during pressure relief valve discharges, *J. Haz. Mat.* (Amsterdam), 21(1–2), October 1990.

Simiskey, P. L. and Faulkner, C. R., Better relief systems design, *Hydrocarbon Process.*, 68(5), 63–64, May 1989.

Sumathipala, K., Venart, J. E. S., and Steward, F. R., Two-phase swelling and entrainment during pressure relief valve discharges, *J. Haz. Mat.* (Amsterdam), 25(1–2), 219–236, October 1990.

Tayler, C., Designing for safer pressure relief, *Process Eng.* (London), 70(12), 57–59, December 1989.

Theisen, T., Calculating back pressure in relief valves and piping, *InTech*, March 1988.

Theisen, T. J., Chatter-free relief valves, *InTech*, July, 1986.

VDI 3673, *Pressure Venting of Dust Explosions*, Part 1, 1995 ed., Verein Deutscher Ingenieure, Dusseldorf.

Venert, J. E. S., Sumathipala, U. K., Steward, F. R., and Sousa, A. C. M., Experiments on the thermo-hydraulic response of pressure liquefied gases in externally, heated tanks with pressure relief, *Plant Op. Prog.*, 7(2), 139–144, April 1988.

Walter, L. F., Reshaping process safety regulations, *Chem. Eng. Prog.*, March 2002.

Wong, W. Y., Safer relief valve sizing, *Chem. Eng.*, International ed., 96(5), 137–140, May 1989.

Wong, W. Y., PRV Sizing for exchanger tube rupture, *Hydrocarbon Process.*, February 1992 and Capacity credit calculation for exchanger tube rupture, *Hydrocarbon Process.*, December 1992.

Wong, W. Y., Size relief valves more accurately, *Chem. Eng.*, 99(6), 1992.

Wong, W. Y., Consider two-phase relief for liquid blockage of flash drums, *Hydrocarbon Process.*, December 1997.

Wong, W. Y., Improve the fire protection of pressure vessels, *Chem. Eng.*, October 1999.

Wong, W. Y., Fires, vessels and the pressure relief valve, *Chem. Eng.*, May 2000.

© 2003 by Béla Lipták

7.16 Relief Valves—Sizing, Specification, and Installation

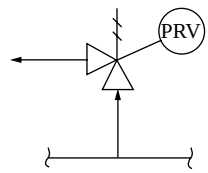

Flow Sheet Symbol

E. JENETT (1969, 1982) **R. V. BOYD AND B. P. GUPTA** (1995)
B. G. LIPTÁK (2003)*

Types of Designs:	Spring-loaded Weight-loaded Balanced by bellows seals Pilot-operated
Design Pressure Ranges:	Screwed designs from 5 PSIG [34 kPag to 10,000 PSIG (69 MPa)], higher as special Flanged steel designs, ANSI CL 150#, 300#, 600#, 900#, 1500# and 2500# ASA Flanged cast iron units in 125# and 250# Ranges of Pilot-Operated Designs Vacuum: –1.7 in. H_2O to –14 PSIG (–43.2 mm H_2O to –96.5 kPag) Low pressure: 3 in. H_2O to 150 PSIG (76.2 mm H_2O to 1034 kPag) Medium to high pressure: 50 to 6,200 PSIG (0.345 to 42.75 MPag)
Design Temperature:	–450 to 1000°F (–268 to 538°C) with suitable material selections for pressure parts, trim, and springs; breaks occur in the temperature ratings at 450°F (232°C) and 800°F (427°C)
Inlet Connection Sizes:	0.5 to 6 in. (12.5 to 150 mm); some suppliers up to 12 in. (300 mm) for special services Pilot-operated PRVs available from 1 to 10 in. (25 to 250 mm) with double outlets starting at 2 in. (50 mm)
Orifice Areas:	API designated orifices: D, E, F, G, H, J, K, L, M, N, P, Q, R, and T (for orifice areas, see Figure 7.16g) Non-API orifices and full-bore orifices are available in areas up to 84 $in.^2$
Materials of Construction:	Pressure parts: cast iron, bronze, cast steel, 300 and 400 series stainless, nickel steel, Monel, Hastelloy, high-temperature carbon steel alloys, materials in compliance with NACE MR0175; trim: basically any machinable alloy, can be cryogenic, NACE, or high-temperature trim
Seat and Seal Materials:	Metal to metal or soft seats Soft seat material options include Aflas, Buna-N, ethylene propylene, Kalrez, Peek, Teflon®, Urathene, Viton®, etc.
Accessories:	Backflow preventer, dual pilots, field test connection with indicator, filter, pilot lift lever, pressure spike snubber, remote blowdown, remote pressure sensor, remote valve lift indicator, valve monitor, valve position indicator
Cost:	See Figure 7.16o
Inaccuracy:	±2 PSI for pressures up to and including 70 psig (483 kPag) ±3% for pressures above 70 to 300 PSIG (483 to 2068 kPag)

* B. P. Gupta and W. Y. Wong should also be credited for some work on this section.

© 2003 by Béla Lipták

±2% for pressures from 300 to 1450 PSIG (2068 to 9997 kPag)
±1.5% for pressures above 1450 PSIG (9997 kPag)

Partial List of Suppliers:

Anderson-Greenwood Tyco Flow Control (www.andersongreenwood.com)
Circle Seal Controls (www.circle-seal.com)
Conbarco Industries (www.conbarco.com)
Crosby Valve of Tyco Flow Control (www.tycovalves.com)
Farris Engineering, Division of Curtiss-Wright Flow Control Corp. (www.cwfc.com)
Fisher Controls International Inc. (www.emersonprocess.com)
Groth Corp. (www.grothcorp.com)
Hydroseal Valve Co. (www.hydroseal.com)
IMI Bailey Birkett Ltd. (www.imibb.co.uk)
Kerr Valve (www.kerrvalve.co.za)
Kunkle Valve Co. (www.kunklevalves.com)
J. E. Lonergan Co. (www.kunklevalves.com)
Mercer Valve Company (www.mercervalvecompanyinc.com)
Rego (www.regoproducts.com)
Varec Vapor Control Inc. (www.varecbiogas.com)
Walworth Valves (www.walworthvalve.com)

INTRODUCTION

In Section 7.15, the various overpressure protection codes and standards were discussed along with the terminology and nomenclature that is used in connection with pressure relief valve (PRV) design. Some of these terms are also defined and visually illustrated in Figure 7.16a. The main purpose of Section 7.15 was to explain the methods by which the required relief capacities are determined. The purpose of this section is to assume that the required capacity is known and, based on that, to determine the size, design features, and installation details of the required PRV.

One might note that, during recent decades, the language used in connection with overpressure protection valves went through some changes. In the past, all overpressure protection valves were referred to as pressure safety valves (PSVs). Then, with the passage of time, first the liquid relieving valves and then all nonfire protection valves came to be called pressure relief valves (PRVs). By now, in most plants, these distinctions have disappeared, and all overpressure protection valves are referred to as PRVs. This practice is also used in this handbook.

The Nature of PRVs

Pressure relief valves are the last line of defense in the protection of personnel and equipment from the consequences of the accumulation of energy or mass that is greater than allowed by design limits. One of the prime responsibilities of process plant management is to operate in a safe manner, and one of the most important safety considerations is to protect all equipment against overpressure.

Normally, plant operating instructions and controls keep the operating pressures within design limits. In the event of control malfunction, emergency shutdown systems should serve to bring the system down in a safe and orderly manner. However, if the emergency shutdown systems malfunction, the plant design must incorporate pressure relief devices to dispose of the accumulated energy and thereby avoid damage.

The relative simplicity and the self-contained and self-actuating nature of the PRV valve make it the most reliable device short of the rupture disc (which does not, however, reclose). It is important to remember that a pressure relief valve is installed only to limit the pressure; it will not regulate, reduce, or depressurize the system unless special provisions are incorporated.

The Purpose of PRVs

Pressure relief valves are commonly installed for one or more of the following reasons:

1. To guarantee the safety of operating personnel
2. To prevent the destruction of capital investment as a result of overpressure
3. To conserve process material from loss during and after an overpressure-related accident
4. To minimize unit downtime caused by overpressure
5. To comply with local, state, national, and other court-enforceable regulations
6. To avoid civil suits resulting from property or personal damage external to the plant caused by overpressure

By designing and installing reliable overpressure protection systems, the plant will not only obtain favorable insurance treatment, it will minimize pollution (primarily air pollution) by preventing the discharge of overpressure vapors.

System Integrity and Noise

Because one of the reasons for installing a pressure relief valve is compliance with local codes and regulations, the designer must take into consideration the system integrity, in particular the noise produced by the valve when it opens. The

© 2003 by Béla Lipták

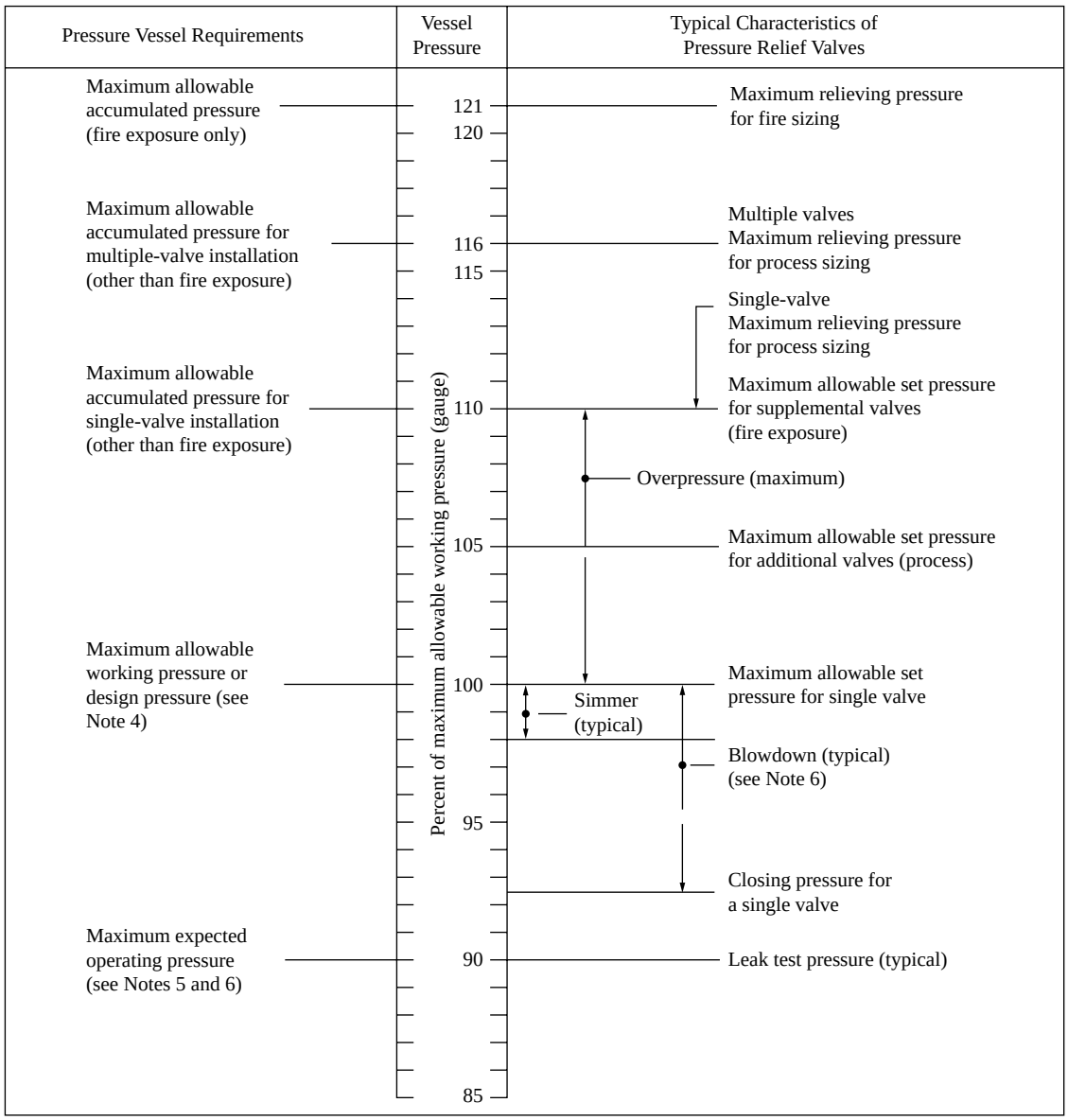

FIG. 7.16a

Definitions of terms used in connection with overpressure relief systems. (Reproduced courtesy of the American Petroleum Institute from API Recommended Practice 520, Sizing, Selection, and Installation of Pressure-relieving Devices in Refineries, Part I—Sizing and Selection, 7th ed., January 2000.)

valve may relieve the required amount of process fluid, but the vibrations caused by the sound power noise of the valve may be beyond the maximum allowable for which the discharge piping was designed.

Failures in relief valve discharge piping have been reported that can be linked to high sound power levels (SPLs) *inside* the piping downstream of the relief valve and at the point where the discharge piping joins the relief system header. There have been cases reported in which excessive velocities in the piping immediately downstream of the relief valve have resulted in a "standing sonic wave" at the juncture of the valve discharge piping and the header piping, i.e., where the first increase in pipe size occurs.

Special care must be taken to review the *actual* maximum flows that can exist in the discharge piping. Velocities must be calculated and noise calculations made to guard against fatigue failures caused by excessive vibration induced by a high SPL. When making these calculations, it is necessary to use the actual installed capacity of the valve. This is because, in most cases, the selected valve has greater capacity than the calculated required capacity. Under certain relieving conditions, at least for some time period, the actual flow corresponds to the size of the actual valve orifice rather than to the calculated required capacity. This consideration is especially important for valves greater than 3 in. (75 mm) and, unfortunately, there is no known technique for assessing this problem.

© 2003 by Béla Lipták

Reliability, Testing, and Redundancy

The designer may also have to consider the requirements imposed by the insurance underwriting groups. Because the purpose of overpressure protection is to prevent the destruction of capital investment and to provide personnel safety, such considerations as toxicity, polymerization, corrosion, and damage to other equipment in the plant must also be considered when deciding on the discharge destinations of PRVs.

Because unit downtime and loss of material are both to be minimized, it is also important that the PRVs provide tight shutoff against maximum operating pressure while it is below the set point for actuation. Personnel safety and the minimization of property damage lead to requirements for high reliability, both in terms of accuracy and repeatability.

A pressure-relieving valve in a chemical plant is rather unique in that it, hopefully, will never need to operate. Furthermore, it is also rare that any such system would ever be operated for test purposes, although certain of its components might be tested periodically. The capability for system testing is usually not provided because of the cost of the added valves and bypasses that would be needed. Even when such capability is provided, the system test is performed only at rather long intervals.

A pressure relief valve is not tested weekly for its condition as one might test an emergency generator or a fire pump. We expect the PRV valve to work when called upon in spite of the extended periods of stagnation while exposed to process fluids, operating temperatures, and operating pressures, plus to the full range of ambient conditions. This requirement that the valve work when called upon, coupled with the requirement to protect the safety of personnel and equipment, drives the designers to consider redundancy. Such designs are exemplified by duplicate or multiple relief valves, rupture discs plus safety valves, flare valves backed up by pressure relief valves, etc.

Safety Checklist

Section 7.15 listed and discussed the code requirements and practices recommended by standards that have been generated by regulating. In addition, the following considerations and options should be kept in mind:

1. The use of extra safety factors in sizing or rating over and above those established in codes, regulations, and recommended practices
2. The provision of other protective facilities that may result in credits under the codes or regulations
3. The provision of credit for redundancy or other protective facilities, even though such credit may not be clearly established in codes or regulations
4. Preferences, particularly in installation practices, based on operating or maintenance practices
5. The establishment of minimum design pressures for various types of equipment in various services (This would affect the pressure-relieving systems in that operating pressure may not always bear the same relationship to design pressure and smaller relieving valves set at the minimum design pressure may be suitable.)
6. The relationship between operating pressure and relief valve set pressure as affected by the upsets to operating conditions that are acceptable before pressure relief occurs
7. The standardization of relieving device sizes and types and the standardization of relieving device mounting nozzle sizes and locations for various types of equipment in different services
8. The inspection and test procedures established by the company for its pressure-relieving systems or the components of those systems
9. The accounting needs and practices of the company as they might affect flow detection and metering in the pressure-relieving system or at the valve
10. Noise produced and maximum level of noise allowed in the discharge piping and header, depending on its diameter

THE SIZING OF PRVS

Before sizing the pressure relief valve, one must determine if the process material released will be vapor or gas, liquid, or a mixture of liquid and vapor (two-phase). Each of these cases is separately discussed below.

The design engineer should also remember that PRV sizing programs are available on CDs from the manufacturers.[1] While these programs do save time, it is advisable to fully understand the sizing steps and considerations. For these reasons, both graphical methods of approximate PRV sizing and accurate calculations will be described in the following pages.

Backpressure

Backpressure can adversely affect the set pressure, relieving capacity, stability, and life span of all types of pressure relief valves. Figure 7.16b represents the correction curve for the effects of constant backpressure in reducing the flow across the nozzle of conventional, nonbalanced valves when the spring setting has been compensated for the constant backpressure.

The effect of backpressure on bellows sealed valves, whether it is fixed or variable, is a function of the specific valve size and design. There is general acceptance of the fact that a backpressure up to 30% of inlet pressure will not need correction. Above that value, the backpressure effect should be evaluated by considering whether it is superimposed backpressure or built-up backpressure.

Superimposed Backpressure The superimposed backpressure is the pressure that is present at the PRV outlet in the relief header when the valve opens. This pressure is a "gauge" pressure and is expressed in units such as PSIG, kg/cm^2(g) or kPag. Generally, the superimposed backpressure is assumed to be constant, which is an incorrect assumption if more than one PRV is discharging into the same relief header.

© 2003 by Béla Lipták

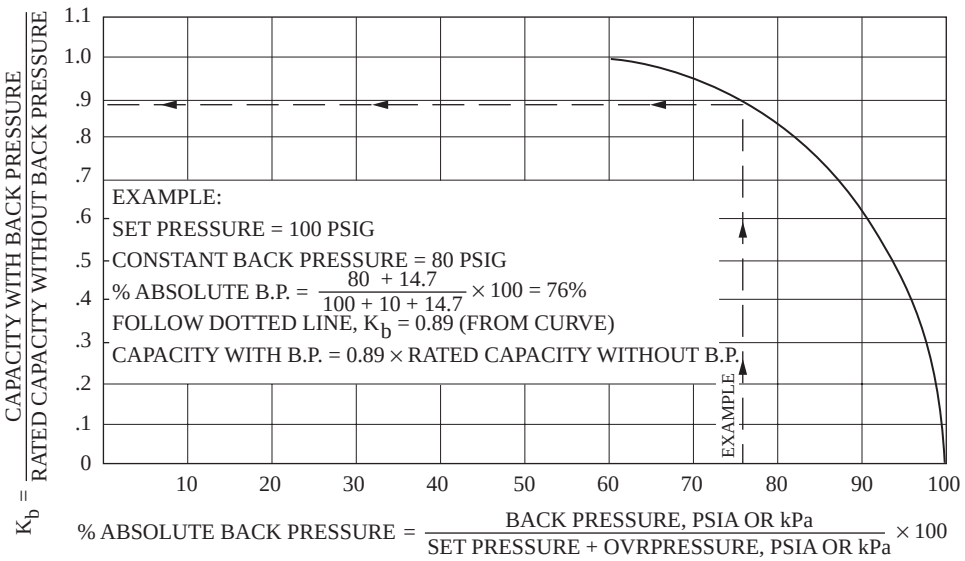

FIG. 7.16b

Constant backpressure sizing factor, applicable when sizing conventional pressure relief valves for gas and vapor services.

In reality, this pressure is variable and is changing as a function of the number of PRVs relieving into the header at any one time.

As was discussed in Section 7.15, a fire zone has an area of 2500 to 5000 ft^2, and a local fire might cause discharges from only one PRV in that area. Similarly, if the cause of the overpressure condition is a blocked outlet, it too might affect only one or two PRVs. On the other hand, if the supply of electric power, cooling water, instrument air, or steam fails, the failure of such utilities can cause many PRVs to be relieving at the same time, and this, in turn, can cause the superimposed backpressure in the relief header to rise substantially.

Built-Up Backpressure The built-up backpressure is the pressure drop between the PRV outlet and the end of the discharge piping. Therefore, it is the sum of the pressure losses in the pipe fittings, valves, and the pipe itself. Its units can be given in PSI, kg/cm^2, and kPa. When choke flow occurs, the built-up pressure can be very high.

The built-up backpressure is a function of the discharge flow rate, the sizes of the outlet fittings and pipe, the number of valves and other restrictions, and also by the compressibility of the discharging vapors and by temperature. The built-up backpressure will therefore be lower if the PRV is connected to a short tail pipe that vents to atmosphere.

Backpressure Effects The backpressure can affect the set pressure of the pressure relief valve. This is illustrated in Figure 7.16c, which considers several valve designs and means for remedying this effect. It is shown in this figure that venting or not venting the bonnet can change the direction of the backpressure effect.

If the backpressure builds up as the valve opens, the valve may chatter and reclose. If the backpressure is constant and is

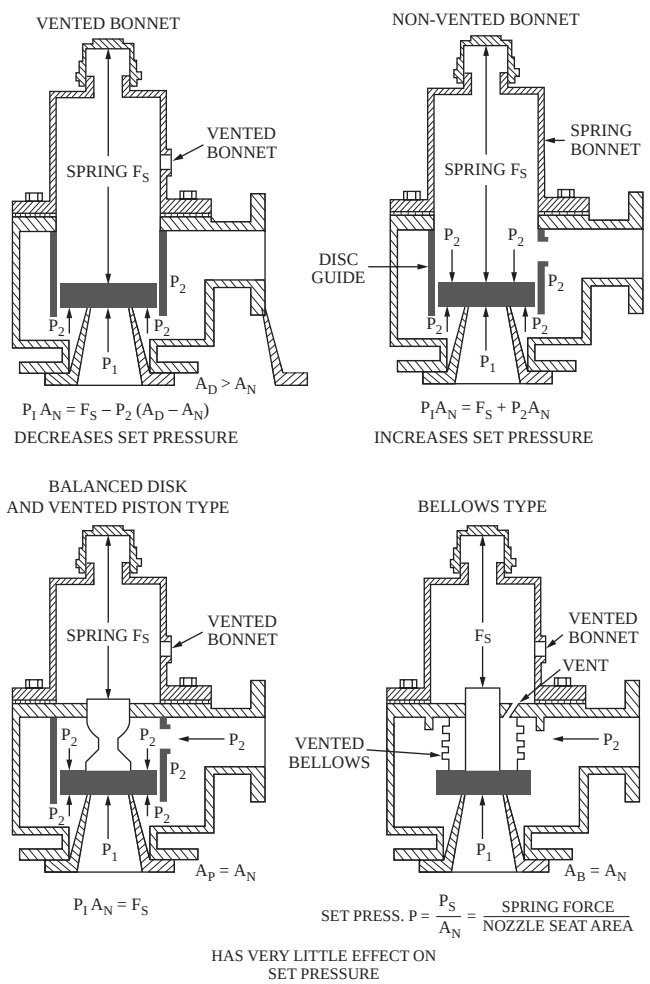

FIG. 7.16c

Effect of backpressure on set pressure. (A_N = nozzle area; A_D = disc area; A_P = piston area; A_B = bellows area.)

© 2003 by Béla Lipták

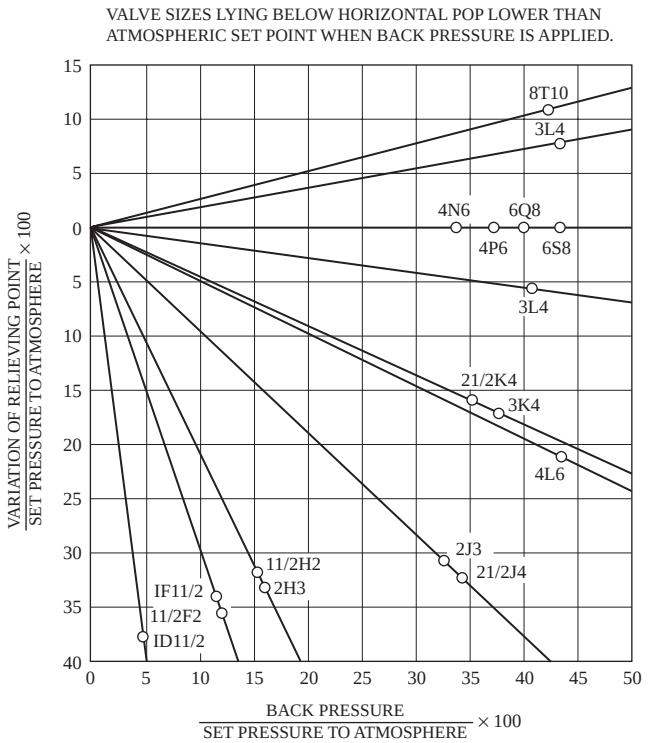

FIG. 7.16d
Manufacturer's tests on effect of backpressure on standard safety relief valves. (Data courtesy of Farris Engineering Corp.)

already present when the valve starts to open, it should be possible (if all code and insurance requirements are fully satisfied) to compensate for it by raising or lowering the spring setting.

In conventional pressure relief valves, constant backpressures up to the critical pressure ratio can be compensated by spring setting without affecting the capacity. Above that setting, compensation can be used, but (as will be discussed later) an appropriate capacity reduction factor must be employed in sizing. All manufacturers provide this reduction factor, and there is virtually unanimous agreement on the factor at any given ratio of constant backpressure to actual relieving pressure for both vapors and liquids.

Figure 7.16d shows that the dimensions and design of the particular valve will establish the change needed in the spring setting and that this change is a function of the backpressure. Therefore, it is *not* suggested that one compensate for backpressure with the spring setting without consulting the manufacturer of the particular valve. In fact, it is suggested that spring setting adjustment be limited to the noncritical applications and that pilot or bellows seal designs be used to guarantee that the PRV will open on set pressure on all critical applications.

Sizing for Vapor and Gas Relief

The basis for almost all pressure relief valve sizing for process industry service is found in the ASME Unfired Pressure Vessel Code Section VIII, Division 1, described in Section 7.15. The basic sizing equation results from capacity conversions for relief valves described in Appendix 11 of that code. This states that the test media capacity is converted to any other *vapor or gas* by Equation 7.16(1),

$$W = K_b CKAP\sqrt{\frac{M}{TZ}} \qquad \textbf{7.16(1)}$$

where

W = the relieving flow of gas or vapor, lbm/hr
K_b = a correction factor for constant backpressure, which can be obtained from Figure 7.16b
C = a constant for gas or vapor, which is a function of the ratio of specific heats "k"; it can be obtained from Figure 7.15b or from Equation 7.16(2), below,

$$C = 520\sqrt{k\left(\frac{2}{k+1}\right)^{k+1/k-1}} \qquad \textbf{7.16(2)}$$

k = the specific heat ratio of the particular gas or vapor, which can be obtained from Figure 7.15a
K = the coefficient of discharge, which is determined from tests
A = the required nozzle area of the valve, in square inches
P = 1.1 × (set pressure) plus atmospheric pressure in PSIA
M = the molecular weight of the gas or vapor
T = the absolute relieving temperature, °Rankine (°F + 460)
Z = vapor compressibility at inlet conditions

The basic equation can be manipulated almost any number of ways, and each manufacturer and designer has its own favorite sizing procedure.

Graphical Method A commonly accepted and easily used graphical approach is shown in Figures 7.16e and 7.16f. Here, the orifice designations of the nozzle areas are those listed in Table 7.16g, which represent the most common API area designations. However, if manufacturer's formulas are used, care must be exercised to use the orifice area with the corresponding recommended formulas. Table 7.16g shows the tabulated nozzle orifice areas and corresponding orifice designations for the API and ASME formulas provided. Using the ASME formula and selecting an orifice based the API area may result in improper valve sizing.

Sizing by Calculation Those who prefer calculations to using the graphical method first have to determine if the flow is critical or subcritical. Critical flow occurs when the gas, as a result of the lower pressure, expands downstream of the PRV's orifice and reaches sonic velocity, which it cannot exceed. The flow rate that corresponds to flow at sonic velocity is called *critical flow.* One can calculate the downstream pressure that, if reached, will result in critical flow (P_{cf}) by Equation 7.16(3).

$$P_{cf} = P_1[2/(k+1)]^{k/(k-1)} \qquad \textbf{7.16(3)}$$

© 2003 by Béla Lipták

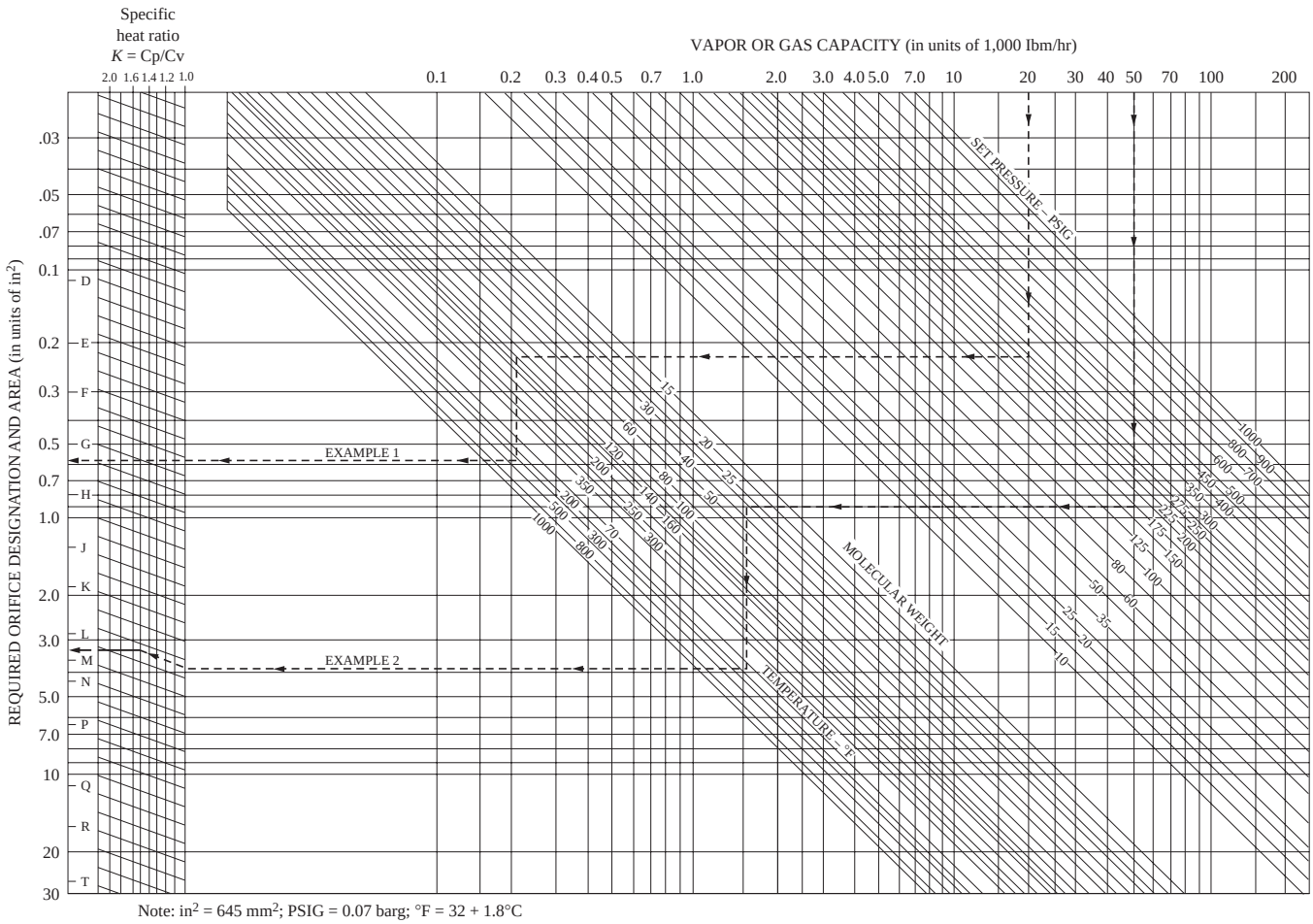

FIG. 7.16e

Graphical method of sizing pressure relief valves for vapor or gas services.

where

P_{cf} = the downstream pressure, which results in critical flow in PSIA

P_1 = the upstream relieving pressure in PSIA

k = the ratio of specific heats for any ideal gas

Critical Flow Sizing Table 7.15a lists the critical flow pressure ratio values at standard conditions for a number of gases. When the downstream pressure P_2 is less than or equal to the critical flow pressure P_{cf}, the relieving flow will be in the critical region. Under these conditions, Equations 7.16(4) and 7.16(5) can be used to determine the required PRV discharge area (A).

$$A = [W/CK_dP_1K_bK_c]\sqrt{(TZ/M)} \quad \text{(in US units)} \quad \textbf{7.16(4)}$$

$$A = 13{,}136[W/CK_dP_1K_bK_c]\sqrt{(TZ/M)} \quad \text{(in SI units)} \quad \textbf{7.16(5)}$$

where

A = the required effective discharge area of the PRV in in.^{2} (mm^2)

W = the required flow rate to be relieved in lb/hr (kg/hr)

C = a coefficient that is a function of the specific heat ratio of the gas or vapor at inlet relieving conditions from Figure 7.15b. If C cannot be so determined, it is suggested that one use C = 315

K_d = the effective coefficient of discharge; for preliminary sizing, a value of 0.975 can be used

K_b = the capacity correction factor for backpressure, which can be obtained from manufacturer's literature or estimated from the API RP 520 based Figure 7.16h for the preliminary sizing of balances bellows PRVs

K_c = a factor reflecting the affect of a rupture disc being installed upstream of the PRV (Its value is 1.0 if there is no rupture disc. When a rupture is installed and there is no published value available for the combination, use the value of 0.9.)

T = the inlet temperature of the gas or vapor being relieved in °R (°K)

Z = the compressibility factor, reflecting the deviation of the process vapors from an ideal gas under relieving conditions at the PRV inlet

M = the molecular weight of the process gas or vapor being relieved

© 2003 by Béla Lipták

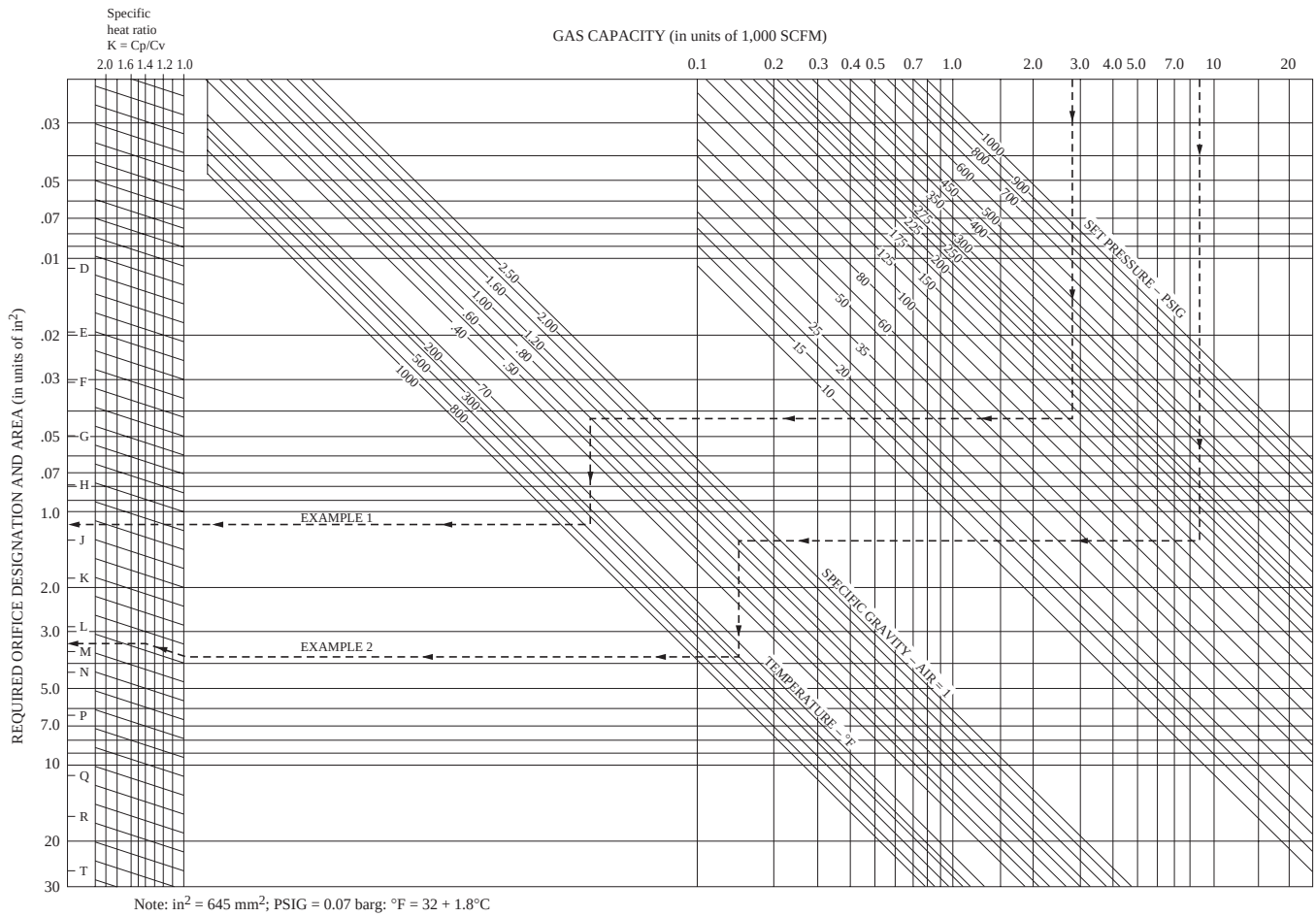

FIG. 7.16f

Graphical method of sizing pressure relief valves for gas services.

TABLE 7.16g

PRV Nozzle Orifice Areas in Square Inches (in.^{2} = 645 mm^2)

Orifice Designation	*API Area*	*Actual (ASME) Area*
D	.110	.1279
E	.196	.2279
F	.307	.3568
G	.503	.5849
H	.785	.9127
J	1.287	1.496
K	1.838	2.138
L	2.853	3.317
M	3.60	4.186
N	4.34	5.047
P	6.38	7.417
Q	11.05	12.85
R	16.0	18.60
T	26.0	28.62

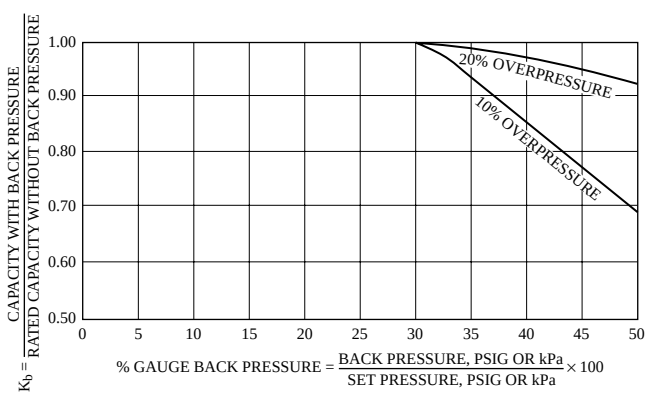

FIG. 7.16h

Variable or constant backpressure sizing factor, K_b, for balanced bellows pressure relief valves on vapor or gas service. The curves represent a compromise of the values recommended by a number of relief valve manufacturers and may be used when the make of a valve or the actual critical flow pressure point for the vapor or gas is unknown. When the make is known, the manufacturer should be consulted for the correction factor. These curves are for set pressures of 50 PSIG (345 kPa) and above. For set pressures lower than 50 PSIG (345 kPa), the manufacturer should be consulted for the values of K_b.

© 2003 by Béla Lipták

P_1 = (for conventional PRVs) the set pressure × (1 + accumulation allowed by code having jurisdiction) + atmospheric pressure in PSIA (kPaa); (for pilot-operated PRV valves) = the set pressure plus accumulation *minus* ΔP_{inlet} in PSIA (kPaa)

ΔP_{inlet} = the inlet pipe loss upstream to the PRV in PSI (kPa)

Subcritical Flow Sizing If the PRV is provided with bellows seals, the sizing for subcritical flow can be based on Equation 7.16(4) or 7.16(5), but the backpressure correction factor K_b should consider the subcritical flow and the tendency of the disc of the PRV to drop to below full lift. For these reasons, the K_b factor should be obtained from the manufacturer.

When sizing conventional or pilot-operated PRVs for subcritical conditions ($P_2 > P_{cf}$), Equation 7.16(6) or 7.16(7) should be used.

$$A = [W/735F_2K_dK_c]\sqrt{\{TZ/[MP_1(P_1 - P_2)]\}} \quad \text{(in US units)} \qquad \textbf{7.16(6)}$$

$$A = 17.9[W/F_2K_dK_c]\sqrt{[TZ/MP_1(P_1 - P_2)]} \quad \text{(in SI units)} \qquad \textbf{7.16(7)}$$

where

F_2 = the subcritical flow coefficient

Backpressure Effect on Capacity Backpressure affects the capacity and thus the sizing of relieving devices. In a sense, the PRV is similar to an open control valve, because its upstream pressure is the process pressure, and its downstream pressure is that which exists in the relieving header. However, instead of being a *controlling* element, it is *controlled by* the pressure conditions at its inlet and outlet.

Most safety valves will handle flow very similar to a theoretical nozzle as long as they are fully open (at full lift) so that the controlling flow area is established by the nozzle. The capacity of a theoretical nozzle is not affected by the downstream pressure as long as it does not rise to the point where the ΔP drops below the critical pressure drop needed to maintain sonic flow. At higher backpressures, the flow becomes subsonic.

The effect of backpressure on the capacity of a conventional safety valve with an unvented bonnet is shown in Figure 7.16i. Note that the two sources of backpressure (superimposed and built-up) produce different effects. Because of this capacity reduction due to lift action, conventional valves should never be used where backpressure variation can exceed 10% of the set pressure.

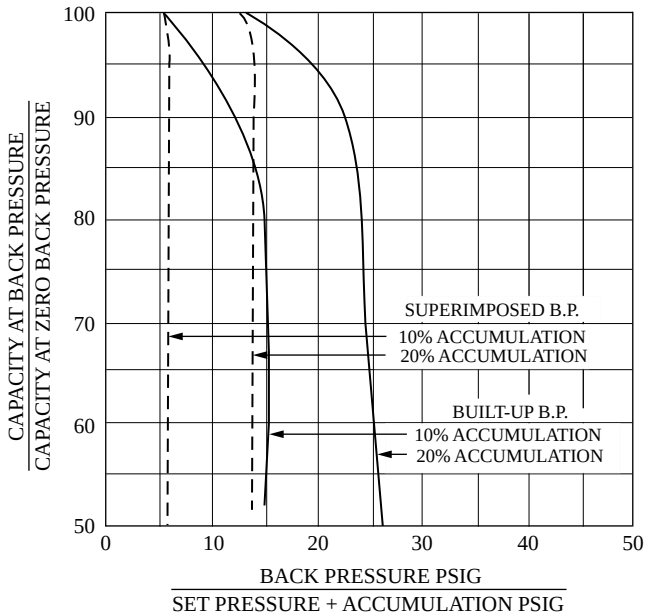

FIG. 7.16i
Effect of backpressure on capacity of conventional safety relief valves.

Sizing for Steam Relief

The need for steam relief sizing is more often encountered in the design of power plants than chemical plants. The sizing method itself is straightforward once the required load and the relieving conditions are established. ASME Code Section I is used in sizing steam PRVs for fired boilers whereas, for nonfired vessels, ASME Code Section VIII is applicable. The basic steam sizing equation is a modification of Napiers.

$$A = W_s/(51.5P_1K_dK_bK_cK_NK_{SH}) \quad \text{(in US units)} \qquad \textbf{7.16(8)}$$

$$A = (190.4W_s)/(P_1K_dK_bK_cK_NK_{SH}) \quad \text{(in SI units)} \qquad \textbf{7.16(9)}$$

where

A, P_1, K_d, K_b, K_c = as defined in connection with Equation 7.16(4)

W_s = the required relieving steam capacity, lbm/hr (kg/hr)

K_N = the Napier correction factor, which is 1.0 if $P_1 < 1500$ PSIA (10,339 kPaa) [For pressures between 1500 PSIA (10,339 kPaa) and 3,200 PSIA (22,057 kPaa), use Equations 7.16(10) and 7.16(11) to calculate the value of K_N.]

$$K_N = (0.1906P_1 - 1000)/(0.2292P_1 - 1061) \quad \text{(in US units)} \qquad \textbf{7.16(10)}$$

$$K_N = (0.02764P_1 - 1000)/(0.03324P_1 - 1061) \quad \text{(in SI units)} \qquad \textbf{7.16(11)}$$

K_{SH} = the superheat correction factor, which is 1.0 for saturated steam (For steam tables, refer to Appendix 5 or see manufacturers' tables.)

© 2003 by Béla Lipták

Sizing for Liquid Relief

The 1986 edition of ASME UG-131 requires that, for pressure relief valves on incompressible fluid service, a capacity certification test using water at a temperature between 40 and 125°F be conducted. For any other fluid, the manufacturer's tables generally can be used as long as the *equivalent water volumetric rate* in gpm is used to enter these tables.

Division I of the ASME Code Section VIII, since 1980, has required that liquid service PRVs be provided with capacity certification. This certification requires that the rated coefficient of discharge be based on 10% overpressure. Existing PRVs that were manufactured before 1980, were not provided with certification, but were sized with 25% overpressure allowance need not be replaced, but new PRVs must be designed for 10% overpressure operation.

For preliminary sizing purposes, disregarding viscosity and backpressure effects, the graph in Figure 7.16j can be used.

Calculating the Discharge Area For more accurate sizing for liquid service PRVs, refer to Equations 7.16(12) and 7.16(13) below:

$$A = [Q/(38K_dK_wK_cK_v)]\sqrt{SpG/(P_1 - P_2)} \quad \text{(in US units)} \qquad \textbf{7.16(12)}$$

$$A = [(11.78Q)/(K_dK_wK_cK_v)]\sqrt{SpG/(P_1 - P_2)} \quad \text{(in SI units)} \qquad \textbf{7.16(13)}$$

where

A, K_cP_1, P_2 = as defined in connection with Equation 7.16(4)

Q = the relieving flow of liquid in GPM (l/min)

K_d = the effective coefficient of dicharge, which should be obtained from the manufacturer (For preliminary sizing use $K_d = 0.65$.)

K_w = the variable or constant backpressure capacity correction factor, which is required only

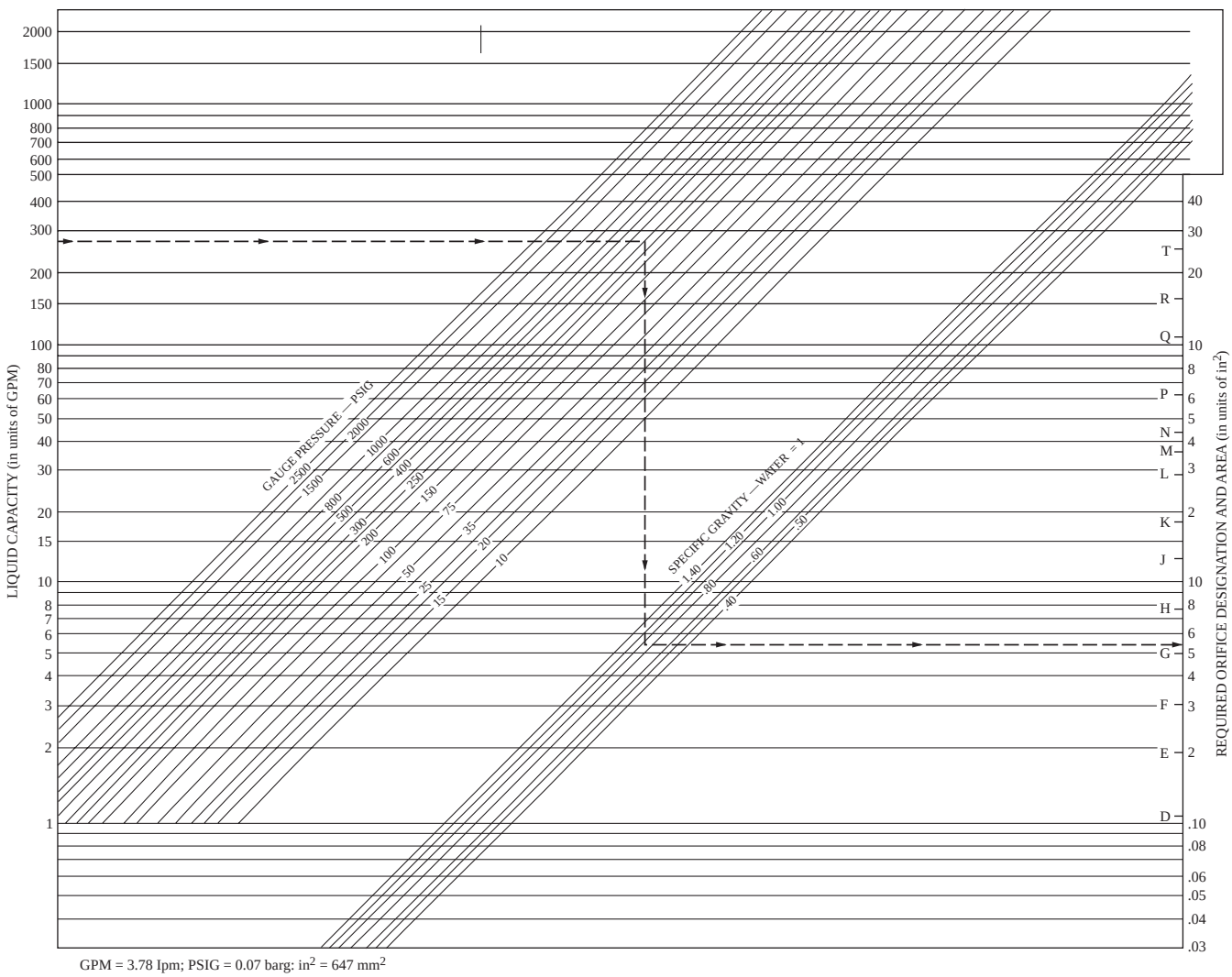

FIG. 7.16j

Approximate relief valve sizing chart for liquids.

© 2003 by Béla Lipták

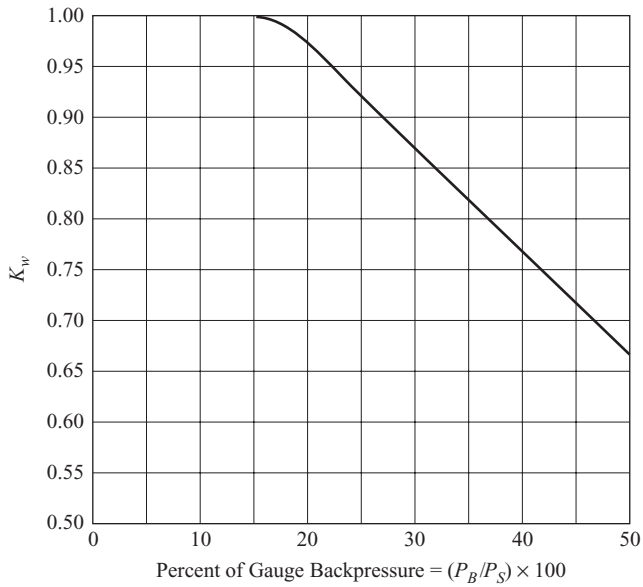

FIG. 7.16k

Curve for the determination of K_w as a function of the ratio of P_B/P_S. K_w is the capacity factor, which is to be used on liquid service pressure relief valves with balanced bellows for correcting the effect of backpressure. P_B/P_S is the percentage ratio of backpressure divided by set pressure (both in PSIG). This curve represents the values recommended by various manufacturers and should only be used if the supplier is not known. Otherwise, the applicable K_w factor should be obtained from the supplier. (Reproduced courtesy of the American Petroleum Institute from API Recommended Practice 520, Sizing, Selection, and Installation of Pressure-relieving Devices in Refineries, Part I – Sizing and Selection, 7th ed., January 2000.)

for bellows sealed PRV valves (Figure 7.16k) (For conventional or pilot-operated valves, or when the backpressure is atmospheric, use $K_w = 1.0$.)

K_v= the capacity correction factor for viscosity, which can be obtained from Figure 7.16l or from Equation 7.16(14), in which R is the Reynolds number

$$K_v = [0.9935 + (2.878/R^{0.5}) + (342.75/R^{1.5})]^{-1.0} \quad \textbf{7.16(14)}$$

SpG = specify gravity of liquid at flowing conditions relative to water at 60°F

Viscosity Correction The factor K_v accounts for the fact that the resistance to flow encountered when handling viscous liquids above 50 to 100 SSU may reduce the velocity and thus capacity enough to require a larger orifice size than the usual liquid capacity formula would indicate. Because the correction factor is a function of the flow conditions, and these in turn depend on the orifice diameter, a trial orifice is usually calculated based on no viscosity correction at all, based on Figure 7.16j.

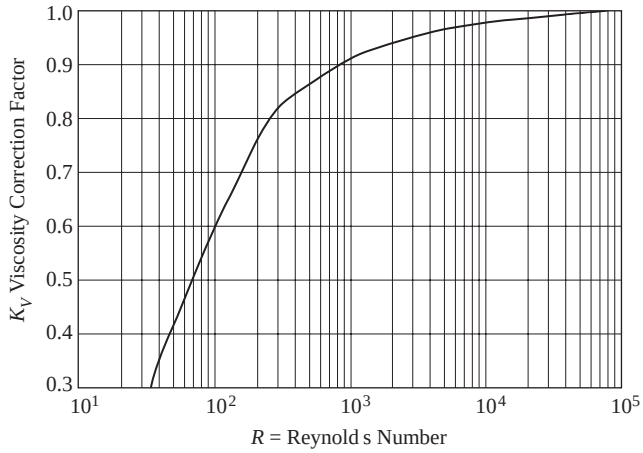

FIG. 7.16l

Curve for the determination of the viscosity correction factor K_V, which is given as a function of the Reynolds number of the process fluid being relieved. (Reproduced courtesy of the American Petroleum Institute from API Recommended Practice 520, Sizing, Selection, and Installation of Pressure-relieving Devices in Refineries, Part I – Sizing and Selection, 7th ed., January 2000.)

Having determined this "nonviscous orifice size," the next larger standard orifice is selected and used on the graph shown in Figure 7.16m to find the correction factor. This procedure is then repeated, using the corrected value as a trial value, until the corrected *required* orifice area is less than that of the standard orifice that was used to establish the K_v factor.

Sizing for Flashing Liquid Relief

API RP 520 Appendix D (7th ed., 2000) describes a method for PRV sizing on two-phase service, but it is still a somewhat controversial subject. No sizing method has been validated by tests, nor is there any recognized procedure for certifying two-phase relief capacity. Problems associated with flashing include the possibility of autorefrigeration and ice formation, which might require the use of heat tracing or specially selected PRV materials.

While the actual sizing is discussed below, certain features of the valve discharge system can affect both valve sizing and the cost of the installation. Because the amount of flash is influenced by the discharge line size through the actual backpressure developed, the ability of discharge line sizing to suppress vapor generation should be considered. Based on limited experience and some calculation, it appears that the most economical valve size results at about 30% backpressure. Balanced safety valves are usually used in flashing flow to minimize the effects of the flashed vapors and of the resultant backpressure on valve operation and capacity.

In the absence of experience in a particular service, some manufacturers use an enthalpy balance (isenthalpic flash)

© 2003 by Béla Lipták

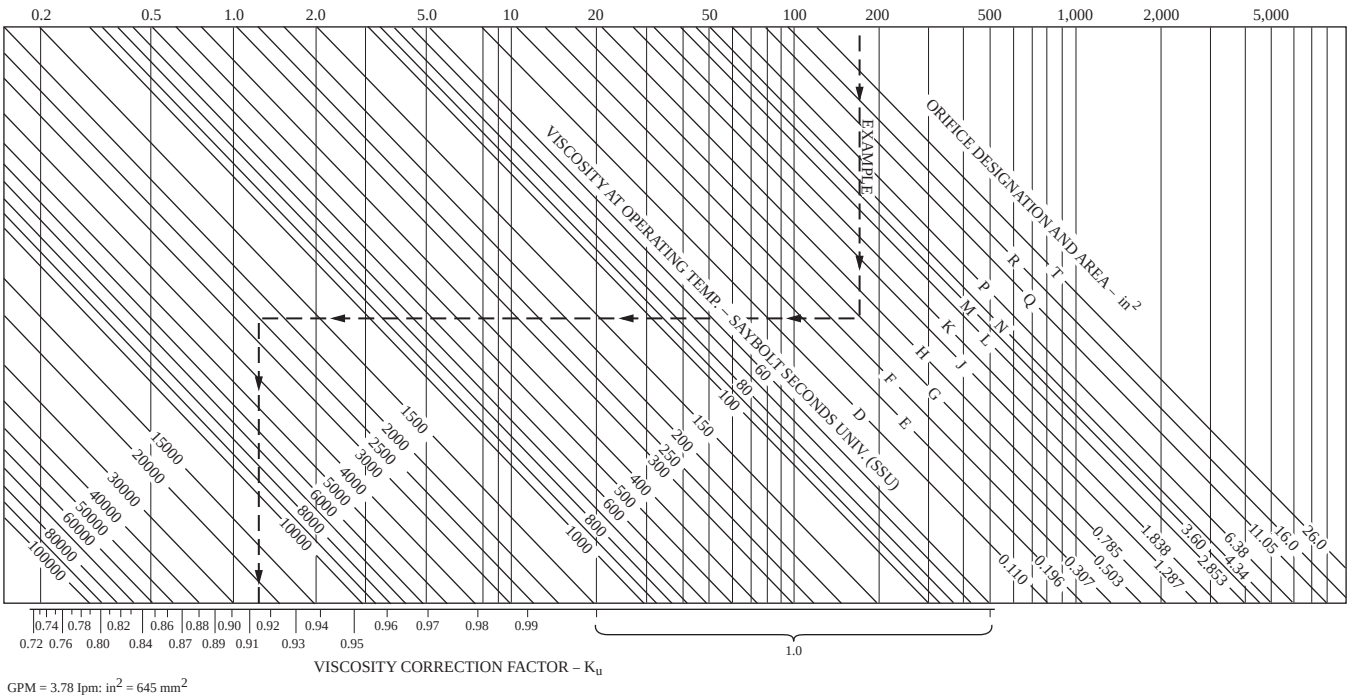

FIG. 7.16m
Viscosity correction chart.

across the valve to calculate the expected volumetric rates of liquid and vapor downstream of the valve. The required discharge areas are then established independently for these two rates, which are treated as all liquid and all vapor, respectively. Both sizing calculations must be made at the same overpressure with the appropriate capacity correction factors applied as needed. The discharge area of the PRV is selected to be at least equal to the sum of these two calculated areas.

While this method is not theoretically refined, there have been no reported incidents in which this procedure led to an undersized valve. The method could conceivably lead to an oversized valve, which in turn can possibly result in valve chatter. However, it is probable that the valve plus its discharge piping will come to a stable condition of balance between the effects of flashing and the downstream pressure drop.

Special Cases

There are a number of special cases (such as relieving polymerizing materials, handling high-temperature water, Dowtherm® systems, super pressure steam system, cryogenic fluids, toxic materials relief, etc.) for which manufacturers have developed special designs of valves and sizing experience or special sizing methods. It is recommended that the reader avail himself of all available advice and assistance. Frequently, the recommendations of two manufacturers will not agree. The reader is thus alerted that he has a problem case and that further study may be warranted.

SPECIFICATION AND SELECTION

Pressure relief valves serve to provide relief from overpressure by opening a path for the excess process fluids flow to a safer location. After the excess pressure is relieved, they reclose, thereby not only preventing the further loss of process fluids but also returning the process to normal operation. A properly designed and installed PRV will perform these tasks automatically, reliably, economically, and efficiently.

The most commonly accepted means of providing this is to sense the rising pressure by some sort of force-balance mechanism that, when its set point is reached, opens the required relieving area for fluid flow. Usually, this force balance has the process pressure acting upon a given area on one side; on the other side, that force is compared against the force of springs or weights.

The magnitude of the forces that are being balanced can be reduced, and thus their control improved, through the use of secondary devices such as pilot valves, solenoids, etc. Of the above-mentioned design options, the weight-loaded valves have largely disappeared from process plant services except in extremely low-pressure applications where their high accuracy and the absence of the "spring constant" effect caused by valve travel makes them advantageous.

Figure 7.16n shows a specification form that can be used to list the required features of pressure relief valves before they are sent out for bids by PRV manufacturers. Figure 7.16o provides some cost estimating information on a list price basis, which plant engineers can use if, based on their previous projects, they know their probable discount schedules.

© 2003 by Béla Lipták

				PRESSURE RELIEF VALVES				SHEET _____ OF _____			
								SPEC. NO.		REV.	
				NO	BY	DATE	REVISION				
								CONTRACT		DATE	
								REQ.	P.O.		
								BY	CHK'D	APPR.	
GENERAL	1.	Tag Number									
	2.	Service									
	3.	Line No./Vessel No.									
	4.	Full Nozzle/Semi Nozzle									
	5.	Safety or Relief									
	6.	Conv., Bellows, Pilot Op.									
	7.	Bonnet Type									
CONN.	8.	Size: Inlet	Outlet								
	9.	Flange Rating or Screwed									
	10.	Type of Facing									
MATERIALS	11.	Body and Bonnett									
	12.	Seat and Disc									
	13.	Resilient Seat Seal									
	14.	Guide and Rings									
	15.	Spring									
	16.	Bellows									
	17.										
OPTIONS	18.	Cap: Screwed or Bolted									
	19.	Lever: Plain or Packed									
	20.	Test Gag									
	21.										
	22.										
	23.										
BASIS	24.	Code									
	25.	Fire									
	26.										
	27.										
FLUID DATA	28.	Fluid and State									
	29.	Required Capacity									
	30.	Mol. Wt.	Oper. sp. gr.								
	31.	Oper. Press.	Set Press.								
	32.	Oper. Temp.	Rel. Temp.								
	33.		Constant								
	34.	Back Pressure	Variable								
	35.		Total								
	36.	% Allowable Overpressure									
	37.	Overpressure Factor									
	38.	Compressibility Factor									
	39.	Latent Heat of Vaporization									
	40.	Ratio of Specific Heats									
	41.	Operating Viscosity									
	42.	Barometric Pressure									
	43.										
	44.										
	45.	Calc. Area sq. in.									
	46.	Selected Area									
	47.	Orifice Designation									
	48.	Manufacturer									
	49.	Model No.									

Notes:

FIG. 7.16n

Pressure relief valve specification form.

© 2003 by Béla Lipták

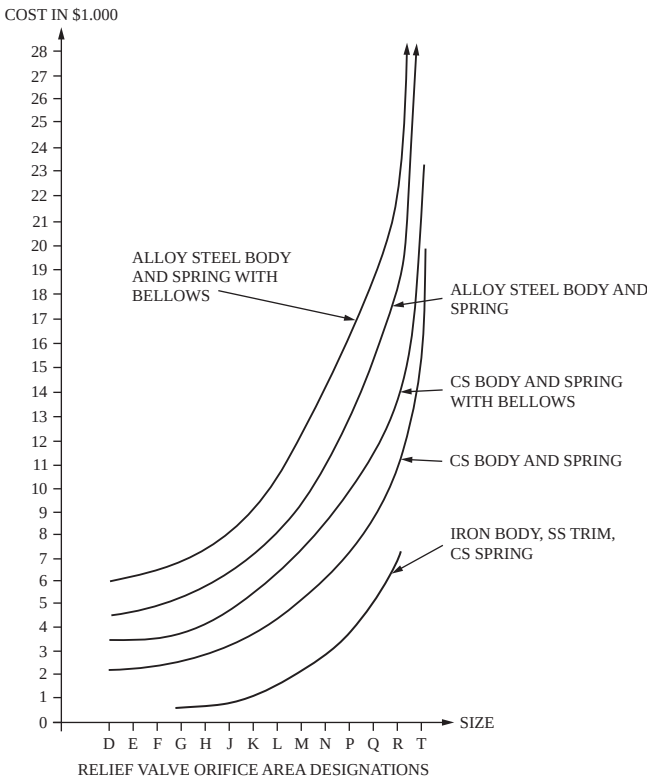

FIG. 7.16o
The list prices of flanged relief valves for preliminary estimating purposes.

Conventional PRVs

As it is shown in Figure 7.16p, the conventional PRV is a force balance device that is held closed by a spring when the inlet pressure is below its set pressure. When the set pressure is reached, the upward force overcomes that of the spring, and the valve opens. When the inlet pressure drops below the set pressure by some percentage (this difference is called *blowdown*), the valve recloses. The housing of the spring is vented to the outlet of the PRV, and therefore the operation of the valve is directly affected by the backpressure.

The main difference in the operation of a PRV on liquid relief service from that of a vapor relief valve is that it does not have "pop action." This is because, on liquid service, the force that lifts the disc is generated by the reactive forces (the impact of the flowing liquid stream on the disc holder) to achieve full lift. These reactive forces build slowly during the initial 2 to 4% of overpressure, and only after that will the valve suddenly surge to full lift. The blowdown (the percentage by which the inlet pressure has to drop below the set pressure for the valve to close) on liquid service is much larger than on gas service—around 20%.

PRV Bodies and Bonnets The basic requisite for a direct spring-loaded pressure-relieving valve is a suitable valve body, which is usually an angle-type device, having an inlet connection that is suitable for the inlet pressure/temperature requirements under both normal and relieving conditions. The body,

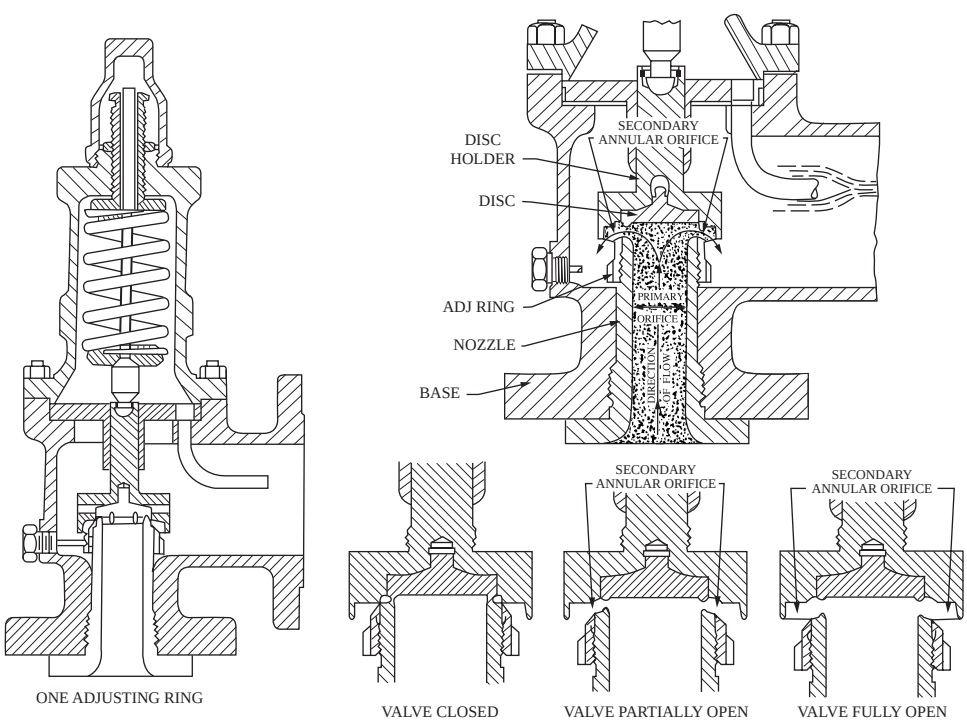

FIG. 7.16p
All the main components of a conventional pressure relief valve are shown on the left. On the lower right, the closed, partially open, and fully open positions of the valve are illustrated. On the top right, the critical working components (nozzle, adjusting ring, disc, and disc holder) are identified.

© 2003 by Béla Lipták

the outlet, and the bonnet are usually designed for a lower pressure than the process pipeline or the inlet connection of the PRV. Body connections can be flanged, screwed, or welded.

The bonnet is sized to accommodate the spring for the maximum pressure rating of the valve. The bonnet is used when the discharging medium must be confined within the valve body and discharge piping. All bonnet-type valves have either caps over the adjusting bolt or lifting levers, either plain or packed.

Flanged valves for steam boilers usually have an open spring with a yoke in place of a closed bonnet. The spring is exposed on the steam valve, whereas the spring is totally enclosed on the bonnet type valve. Marine boiler valves are of the yoke type except that additional cover plates must be added and sealed to prevent tampering with the spring. The covers are vented (not pressure tight).

Seat and Spring The PRV inlet incorporates a valve seat with a disc for full closure of the inlet port. The disc is usually spring loaded, and the spring force is applied directly on the disc by means of a stem. The disc may be either disc guided or top guided. A bottom (disc)-guided valve has vanes or feathers for guiding in the valve bore (inlet port). Process valve are usually top guided (Figure 7.16p). Boiler valves and liquid relief valves are often disc guided.

The set pressure is determined by the selection of the proper spring and by adjusting the bolt that compresses the spring to the correct opening pressure. Springs are classed in different ranges so that the spring is never overstressed and so that proper clearance between the coils allows for full lift. The spring force at open position must not exceed the lifting force of the flowing medium when the valve is fully open. The spring setting may be adjustable in a narrow range. This adjustment can be 30% or more on low-range springs and 5% on higher-range springs. The manufacturer must be consulted for the acceptable range for a particular spring.

Nozzles and Blowdown Rings The inlet of the PRV may be described as a bushing, semi-nozzle, or full nozzle. The bushing is used on bottom-guided valves. The semi-nozzle is usually found in cast iron valves. Both are screwed into the PRV's body. The full nozzle is utilized on steel valves and is the part of the valve that is designed for the pressure rating of the process line.

The seat, orifice, and flange facing is one piece. The flange of the valve is used for bolting force, which is to ASA standards. The nozzle flange construction is similar to a Van Stone-type flange. The discharge area or orifice of a nozzle type valve is smaller than the nominal inlet. The converging of the nozzle results in a high velocity, which provides the high kinetic energy required to obtain high lift.

Pop Action The capacity of PRVs must be accurately calculated, and their action must be reliable and foolproof over the long run. Reliability is achieved by the maximum use of simple mechanisms such as springs and linkages, and so forth. Accuracy in relieving capacity is achieved by conservatism, by treating the relief device as an orifice, and by attempting to size and install it so that it can always release the process fluid (and thus energy).

In Figure 7.16p, one should note that there is an adjustable ring around the nozzle. Furthermore, the disc has either a fixed or adjustable deflecting lip. The purpose of this lip is to form a huddling chamber, which provides the pop action of these pressure relief valves. The inlet nozzle is used to efficiently generate the required velocity head (and thus capacity), while the lip and the ring on the nozzle form a secondary orifice and a device for reconversion of this velocity energy into static pressure to provide the pop action when sufficient vapor flow develops.

Valve Lift and Capacity Being spring-loaded, PRVs require some increase in force, because the movement of the spring occurs while the valve is opening. The amount of this force increase is determined by the spring constant and by the amount of valve lift required to achieve full capacity. Most PRVs reach their full capacity opening at about 3% above their set pressure. If the pressure rises further, the area of opening does not increase, so the increase in PRV capacity is the result only of increased valve pressure differential.

Therefore, at 3% overpressure, the valve has fully lifted. At this point, the curtain or cylinder area (huddling chamber) between nozzle and disc is greater than the cross-sectional area of the nozzle. The so-called low-lift valves gain more capacity at higher pressure, because they have not reached their limiting dimensions for the curtain area at the low overpressures. In such cases, it is not permitted under the ASME Code to calculate down-ratings for valves at lower pressure based on performance at a higher test pressure, although up-rating above test pressure is permitted, because it will always tend to be quite conservative.

In contrast to gas or vapor PRVs, liquid service relief valves generally do not reach their full capacity dimensions until their full nominal rating overpressure of 10% is reached. In liquid PRVs designed prior to 1980, this overpressure was 25%. Down-rating to lower pressures is permitted and provided by all manufacturers. It is important to understand and design for this up-rating and down-rating, especially when considering actual flow during maximum relief. This can affect pressure losses in inlet and outlet piping.

Balanced PRVs

Two of the most common means of eliminating the effect of backpressure on the set pressures of a PRV's set pressure are the use of bellows seals and of a balancing piston design. Figure 7.16q describes both of these devices. The balanced disc, which is operated by a vented piston, is shown on the left, and the bellows sealed designs are on the right. Note that these devices may or may not provide a true balance, depending on how well they match the nozzle area.

© 2003 by Béla Lipták

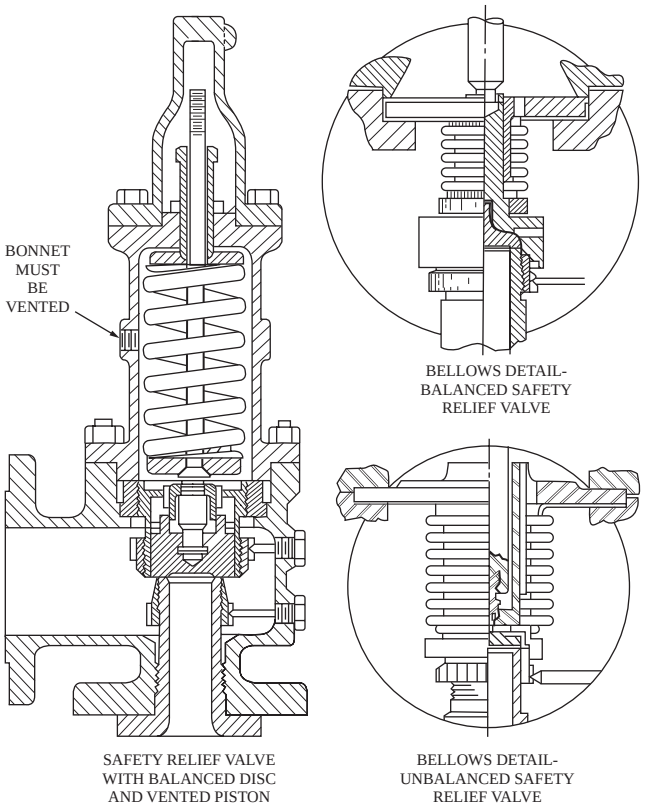

FIG. 7.16q
Balancing devices include balancing pistons (on the left) and bellows seal (on the right), which can be placed on either balanced (top) or unbalanced (bottom) relief valves.

The backpressure effect on the PRV's set pressure has already been discussed in connection with Figure 7.16c. This figure illustrated several valve designs and four different means of remedying this effect. On the lower right, Figure 7.16c illustrates a PRV that is provided with vented bellows seals. In this design, if the bellows area (A_B) is the same as the nozzle area (A_N) of the PRV, the valve will be balanced, and the backpressure will have no effect on the pressure set point at which the valve opens. Such a balanced PRV is shown on the upper right of Figure 7.16q.

If the bellows area (A_B) is *not* the same as the nozzle area (A_N), the valve will be unbalanced, and the backpressure will affect the set point. Even among balanced bellows designs, there are differences among the K_b correction factors of different manufacturers (Figure 7.16r). These variations are a function of the specific valve design.

Equations 7.16(4) and 7.16(5) should be used when sizing balanced bellows PRVs for gas or vapor service. In these equations, the backpressure correction factor K_b serves to correct for the loss in capacity resulting from subcritical flow and for the condition when the valve disc does not lift fully. For preliminary sizing estimates, Figure 7.16b can be used to obtain a K_b correction factor, but, because each manufacturer's PRV design is a little different, the actual value of K_b should be eventually obtained from the selected manufacturer.

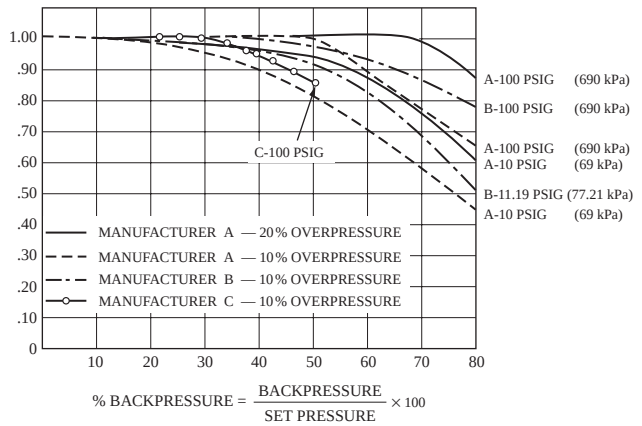

FIG. 7.16r
Backpressure capacity reduction factor (K_b) for balanced bellows PRV valves.

When sizing the PRV for liquid service, it is common practice to use the minimum pressure drop in the standard formula [Equation 7.16(12) or 7.16(13)], which includes the K_w factor for backpressure correction. For liquid applications as well, there is variation in this factor among vendors.

As was shown by Equation 7.16(14), viscous materials adversely affect the capacity of relief valves. Because the required correction depends on the Reynolds number, the point at which a correction is required will be a function of orifice size, flow rate, and flowing viscosity (Figure 7.16l). There is reasonably good agreement among manufacturers as to the viscosity correction, and there is also general agreement that viscosities below 50 to 100 SSU do not require correction.

Pilot-Operated PRVs

The pilot-operated PRV shown in Figure 7.16s consists of an unbalanced floating piston type main valve and an external or integral pilot. During normal operation, because the area of the piston is larger on the top than on the bottom, and because both are exposed to the same process pressure, the resulting net force holds the PRV tightly closed. As the process pressure rises, the seating force increases with it. This feature is an advantage in applications in which the maximum operating pressure is close to the relief set pressure and it is important to prevent leakage.

When the set point is reached, the pilot vents the pressure from the top of the piston, and the piston lifts. When the process pressure drops below the set point of the pilot, it closes its vent, which, in turn, reseats the piston.

The pilot can be pop-action or modulating and can be flowing or nonflowing. The modulating design can save expensive process fluids and can shorten the system recovery time by relieving only as much process fluid as needed to lower the pressure below its set point. For most services except for inert gases, the nonflowing designs are preferred.

© 2003 by Béla Lipták

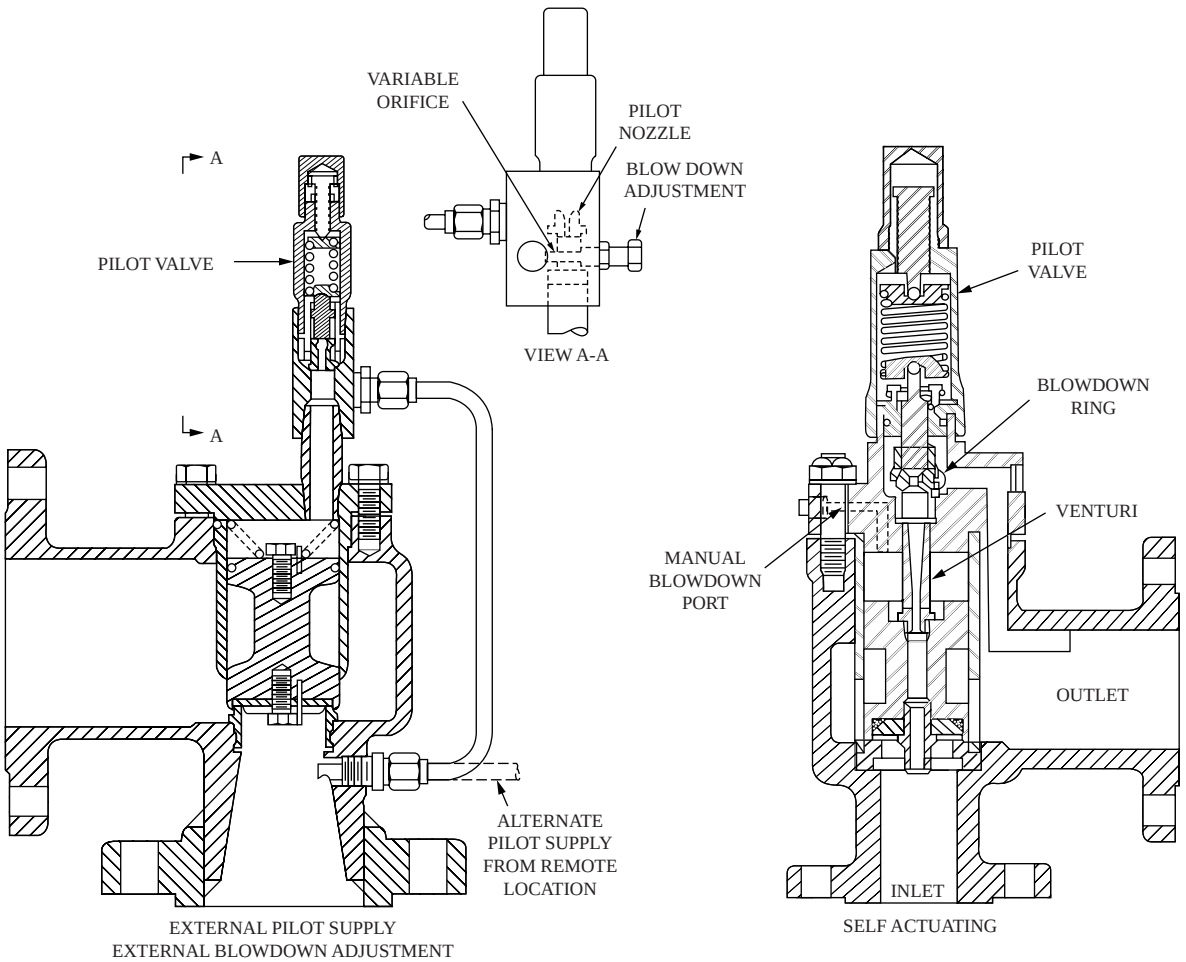

FIG. 7.16s
Pilot-operated relief valve designs showing the external (left) and integral pilot versions (right).

Integral or External Pilot The PRV on the right of Figure 7.16s utilizes an integrally mounted conventional safety valve that, based on the relationship between the process pressure and its set point, sends the process pressure to the top of the main piston or vents it. The external pilot design on the left permits adjustment of blowdown without a need for entering the valve proper and uses an external sensing line to the pilot.

There are also pilot-operated PRVs in which the blowdown and relief settings are independently adjustable through the pilot valves mounted on top of the main piston or disc chamber. Most of these designs have not received wide acceptance because of the large number of static and moving seals they require for proper functioning and because of the small clearances and potentials for plugging in the pilot mechanisms.

Advantages Where operating pressures approach the set pressure, and where the process fluids are toxic and thus present hazardous leakage problems, pilot-operated valves present special economic and safety advantages.

1. The probability of leakage is reduced when the operating pressure approaches the set pressure because, as the process pressure increases, the forces that are holding the piston closed also increase. In contrast, in the spring-operated valves, the differential pressure on the seat decreases under these conditions, causing simmering near the set pressure.
2. Flexibility is provided by the potential for remote operation.
3. Because nozzles are not needed to generate the velocity for pop action, the capacity is larger. The potential increase in capacity over the largest nozzle orifice for a given body size ranges from 150% for smaller sizes to about 120% for the larger sizes.
4. There is improved operability at up to 98% of set pressure due to lower blowdown. Figure 7.16t shows these advantages.
5. There is a reduction in the loss of product loss, downtime, and maintenance.

Disadvantages

1. There is increased potential for failure due to the large number of static and moving parts.

© 2003 by Béla Lipták

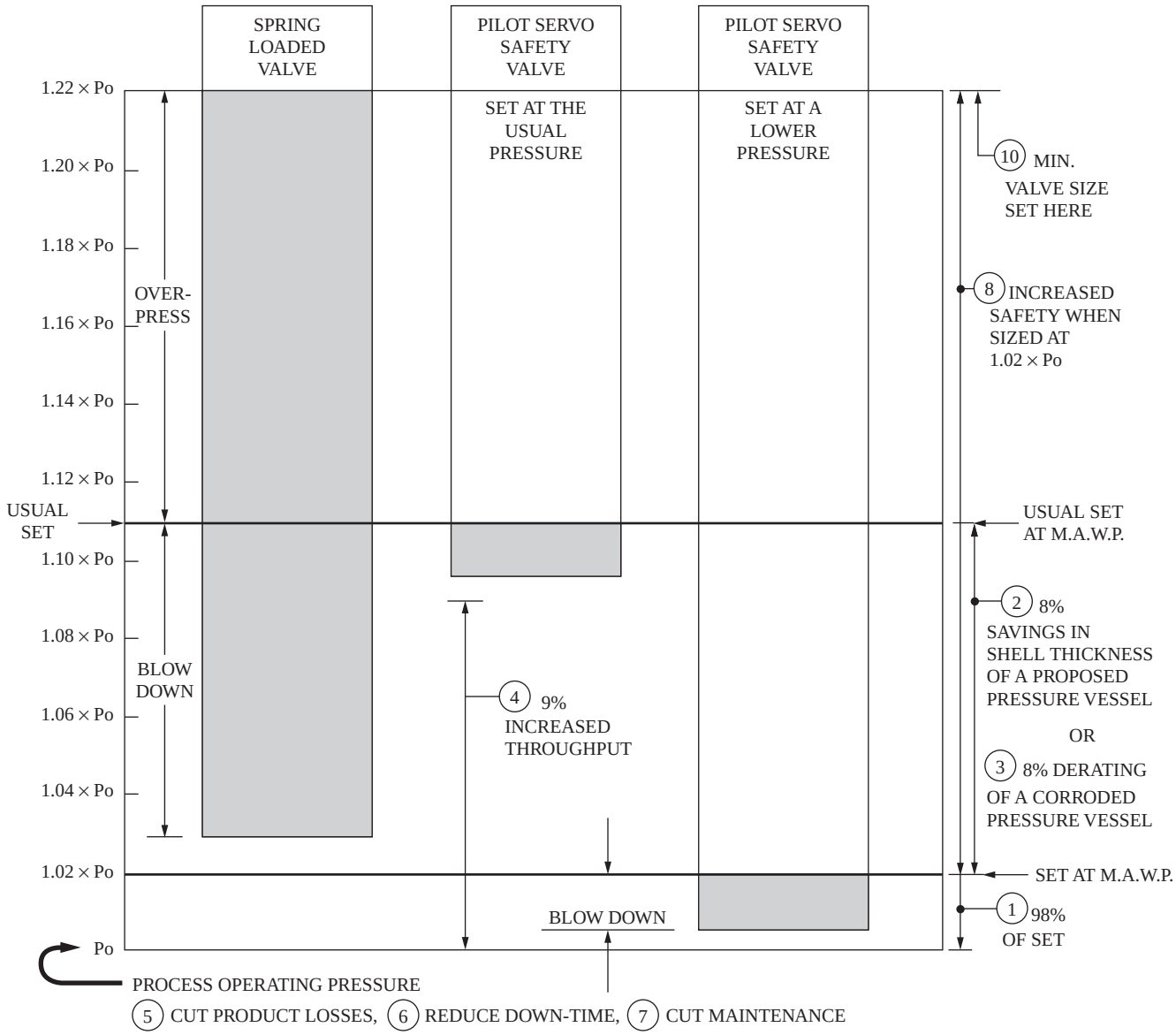

FIG. 7.16t
Comparing the operating ranges of conventional spring-loaded PRVs to the ranges of pilot-operated ones.

2. Small clearances exist in pilot mechanisms that can be plugged by dirty process fluids.
3. The lead lines between the process and the pilot valve and between pilot and main valve are small in size and therefore have a higher potential for plugging.

Modulating Pilot-Operated Valves The modulating pilot-operated relief valve is especially useful where some degree of oversizing is necessary or desirable, because this valve design helps to eliminate chattering. The main feature of the modulating pilot-operated relief valve is that it has a zero blowdown, which allows the main valve to modulate while being approximately at the set pressure.

On gas or vapor service, this valve is at full lift when the overpressure is about 3%, and when it is about 10% on liquid service. Due to the variable orifice feature, the modulating PRV valve opens only to relieve the overpressure and hence reduces both the noise and the upset to the downstream process. Figure 7.16u shows the lift of the valve piston as a function of the process pressure during modulation. It can be seen that this PRV valve changes its lift (opening) as the rate of discharge is surging, thus avoiding chatter.

When to Consider Pilot-Operated PRVs When the following conditions exist, it is justified to consider the use of pilot-operated PRVs (POPRVs):

1. The expected PRV inlet losses are significant.
2. The margin between the operating pressure and the set pressure is less than 10%.
3. The operating pressure is less than 15 PSIG.
4. The lighter weight of the POPRV is a consideration.

© 2003 by Béla Lipták

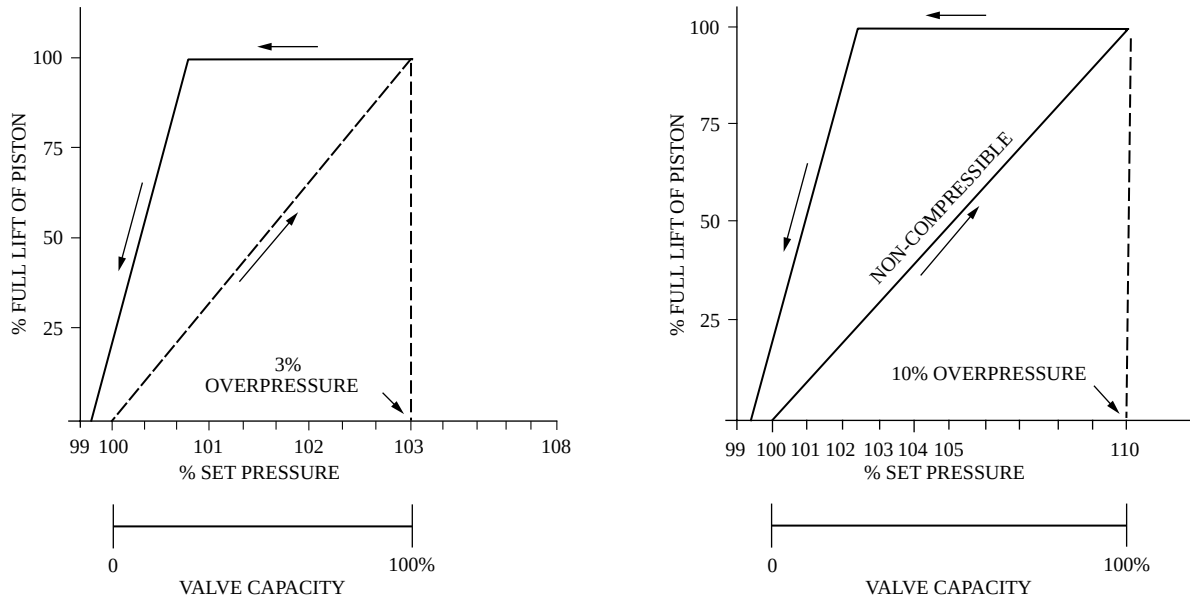

FIG. 7.16u
The operation of modulating pilot-operated pressure relief valves on gas or vapor (left) and on liquid service (right).

5. If the required orifice size is larger than "P," both cost and operating performance favor the consideration of using POPRVs.
6. A depressuring system is needed.

In connection with "depressuring," it should be noted that such units should be used only as backups in addition to regular pressure-relieving systems. These backup systems should be sized to lower the process pressure from the set pressure to 50% of design pressure within 15 min. They are considered when the response time of the regular PRVs is insufficient on reactors with potential for runaway reactions, on gas filled tanks exposed to fire, on high-pressure fluid applications in the event of major leakage, and in the reduction of hydrogen partial pressure to minimize the potential for exothermic reactions.

Specification and Selection Checklist

In addition to selecting a particular pressure relief valve for a specific service, it is advisable to review the following checklist of the most frequent PRV system problem areas:

1. Make sure that, from among ASME Section I and VIII, API, NFPA, etc., the right codes have been followed.
2. Specify both maximum and minimum normal operating temperatures and design the PRV for those and not for the temperatures that might be reached during fire relief conditions. Evaluate the high-temperature effects on the seat and seal of the PRV, check for temperature causing disc warpage or spring set-point change.
3. Make sure that the set pressure of the PRV is equal to or less than the tank design pressure. If the PRV protects several vessels, make sure that the hydrostatic head of liquids is considered in selecting its set point so that the design pressure, even at the lowest point, will not be exceeded.
4. Make sure that the inlet and outlet line losses are consistent with the code limits, and consider the use of POPRVs with remote pressure detection when high inlet loss is unavoidable.
5. Select a safe discharge point for the PRV if the process fluid is toxic, corrosive, or flammable to protect both the operators and the environment.
6. Consider the possible process upsets as well as start-up and shut-down conditions when selecting the operating margin (difference between set pressure and operating pressure) for the PRV; if the process fluid is toxic, corrosive, or very valuable, make that margin large.
7. Consider galling or seizing problems in guiding or other close clearance areas, which can be caused by bad materials selection, foreign matter entry, or deposit buildup.
8. Check for atmospheric corrosion effects on the discharge portion of the valve bonnet and other portions of the discharge header system. Check, in particular, the effect on high-stressed elements such as springs. Consider the use of diaphragm seals and bellows seals.
9. Consider the possibility of polymer or other material buildup in throats of valve or operating mechanism after or during relief, which could impair valve action. Consider the use of various seals.
10. Consider the resistance of the PRV valve assembly to vibration.

© 2003 by Béla Lipták

11. Provide the valve designs that will minimize chatter on pulsating services.
12. Consider the probable condition of the valve and its seating after exposure to external fire.
13. Evaluate whether the inlet, outlet, and/or the PRV itself requires thermal tracing, because winter temperatures can cause freezing of the process fluid. Evaluate the need for steam jacketing to prevent tendencies of solidification or crystallization within the valve. Check, in particular, the degree of steam jacketing required.
14. Make sure the features are provided to accurately guide the disc.
15. Check the need for valve position indicating devices.
16. Check the availability and desirability of augmenting normal disc seating forces or keeping them constant until the valve set point is reached so as to minimize leakage.
17. Select seat and seal materials that are compatible with, and are not dissolved by, the process fluids. On H_2S service, make sure that the valve materials are selected in compliance with NACE MR0175. Also, make sure that the seat will reseat tightly after relieving on specific service.
18. Make sure that the proper design features are selected for countering the effects of all types of backpressures and the resulting variations in set point and blowdown.
19. Evaluate the consequences of, and provide the ability to detect, bellows rupture.
20. Consider open-spring vs. bonneted-spring designs.
21. Evaluate the degree of blowdown needed and answer questions such as: Does blowdown have to be adjustable? Can pop action be destroyed in adjusting blowdown?
22. Evaluate the need for special service valves such as chlorine service, toxic material, LPG storage tank, ICC approved, Coast Guard approved, etc.
23. Evaluate the need for various auxiliary features such as test gags, lifting levers open or packed, screwed vs. bolted adjusting nut caps, etc.
24. Evaluate the level of noise produced and its effect on discharge piping.

PRV OPERATION AND PERFORMANCE

The topics of blowdown, PRV chatter, valve tightness or leakage, and discharge system considerations are discussed in the following paragraphs.

Blowdown

The phenomenon of blowdown is caused by the use of springs in PRVs. The relieving system, when in operation, is a kinetic system in which the PRV is at a point of high kinetic energy in contrast to the equipment that it is protecting. The valve spring balances against a pressure that equals the pressure in the protected tank minus the kinetic effects.

When the PRV is closed, the system is a static one, with no kinetic effects. Therefore, the pressure at the point of spring balance is equal to that in the protected tank. When the PRV is open, its inlet pressure is less than the pressure in the protected vessel because of the inlet pressure drop. This discrepancy between relieving and static conditions requires the allowance for blowdown.

Blowdown is the amount by which the protected tank's pressure has to drop below the PRV's set pressure for the valve to reseat. This pressure difference is needed to ensure that the valve satisfies its force balance once it closes. The normal blowdown of a PRV is between 2 and 7% of set pressure. Pilot-operated PRVs can reduce the blowdown to about 2%, and engineers should always consult the supplier of a particular PRV design for the actual percentage of their design.

Section I of the ASME code for fired boilers requires that the PRVs reach their full lift at a pressure not greater than 3% over their set point and reclose within the maximum blowdown values given in Table 7.16v. Section VIII of the ASME code for unfired vessels does not provide a blowdown requirement, and the industrial practice is about 7%, which means that the normal operating pressure must be under 93% of set pressure.

Setting the Blowdown The position of the adjustable ring on the PRV nozzle (Figure 7.16p) controls the blowdown. This position establishes a secondary orifice area as the valve opens and closes. Blowdown is set by first bringing this ring all the way up to the disc (this corresponds to the maximum blowdown position) and then lowering it a number of turns as recommended by the vendor. This is necessary because most test facilities have limited supplies of gas, and the set pressure is usually tested at zero blowdown.

For process PRVs, the percent blowdown per turn is usually based on methane. A 5% blowdown setting established by using methane can represent about 11% when the valve is handling butane. Very few manufacturers can provide or have published data on this.

If blowdown is an important consideration, field tests usually must be made after the PRV is installed. Even then, it is nearly impossible to simulate actual, desired, or design relieving conditions. Pilot-operated valves are much less subject to these considerations, because they can usually be set for smaller blowdowns. Three percent is fairly standard for a POPRV, and as little as 1% can be achieved in some cases.

TABLE 7.16v
Blowdown Recommendations by ASME for Fired Boilers and Associated Tanks Operating at up to 375 PSIG

Pressure Relief Valve Set Pressure in PSIG	*Maximum Blowdown Recommended*
<67	4 PSI
<67 to <250	6% (of set pressure)
>250 to <375	15 PSI

© 2003 by Béla Lipták

PRV Chatter

Energy losses in the inlet piping to the PRV and the protected tank (as well as an oversized valve) can lead to a condition known as *chatter*. Under these conditions, the PRV valve repeatedly cycles between its open and closed positions. Variations in backpressure exceeding about 10% while a conventional PRV is relieving will also produce an unstable force balance condition and chatter.

Section II of API RP-520 endorses the widely used limit of 3% of set pressure as the maximum limit for the pressure loss in the inlet piping of a PRV. If, during relief, there are losses much higher than 3%, they can drop the pressure at the PRV seat to the reseating value. When this happens, the valve closes, but as soon as it does, it is immediately subjected to a pressure rise, because closure has eliminated the kinetic effects. This rise in pressure can be enough to cause the PRV to reopen, and the cycle repeats.

Oversized valves can also cause this same condition, because a spring-loaded valve needs to have about 20 to 30% of its maximum flow to establish a stable force relationship to maintain a stable disc position. Chatter has at least two detrimental effects. One is that the valve's seating condition will cause leakage. The other detrimental effect is that bellows failure can be expected if the disc chatters or flutters.

Chatter and Inlet Line Loss in POPRVs Pilot-operated valves are not subject to chatter to the same extent, because they are open or closed and cannot "throttle down" to flows in the 20 to 30% range. Thus, if they are oversized, repeated openings and closings may be needed to hold the system pressure, and the net result is an action approaching chatter. Modulating pilot-operated relief valves overcome the basic problem of oversizing and inlet pressure losses that are the causes of chatter.

As far as their set pressure is concerned, POPRVs can have more than 3% pressure drop in their inlet line if they are using a remote sensor (Figure 7.16s shows a local pressure pilot line). In such situations, the inlet line loss will still limit the relieving capacity of the valve. Therefore, the inlet line loss should always be considered *before* the POPRV is sized. If this is not done, when the inlet loss is calculated, it might be found that a larger valve needs to be used. Naturally, in all high line loss cases, one should consider the relocation of the POPRV to the point where the remote pilot line detects the process pressure.

Chatter on Liquid Service The subject of chatter is of special interest when relief valves are mounted on vessels that are full of liquid. In the past, conventional valves designed for vapor service were also used in liquid service, and this had catastrophic results. This is because, in a liquid system, the pressure profile immediately upstream of the PRV valve can change rapidly when the valve "pops open," especially if there is a significant length of inlet piping between the valve and the vessel being protected. In that case, when the valve opens rapidly, an immediate reduction in pressure (at the inlet to the valve) can make the PRV valve close prematurely. The pressure then builds back up again quickly, the valve must open again, and the cycle repeats; thus, chatter ensues.

Most manufacturers offer a liquid-service trim designed specifically to overcome this problem. The piping between the inlet to the valve and the process being protected should be kept to a minimum. Direct connection of the valve to the process vessels is preferred, if practical. Another potential solution is to use a pilot-operated or modulating pilot-operated PRV valve that is provided with a remote sense line, depending on the process conditions and type of process liquid.

PRV Tightness and Leakage

If fire is the only potential cause of overpressure, the valve tightness in spring-loaded valves can be markedly improved by taking advantage of the 20% accumulated pressure that the ASME Code allows for this condition (Table 7.16w).

If one valve is set for 109% of maximum allowable working pressure (MAWP), and 10% accumulation is allowed, this results in the same size valve as one set at 100% allowing 20% accumulation. However, if the operating pressure is at or near 90% of the maximum allowable, the first valve will have about twice the force keeping the seat tight at the operating pressure as that available in the case of the second valve (Figure 7.16x).

Using Two PRVs Another way to reduce leakage in some installations is to use two PRVs. This is a possibility if, in a particular application, there is a large fire load but relatively

TABLE 7.16w

ASME Section VIII Provides the Following Recommendations for Maximum Set Pressures and Maximum Accumulated Pressures for Both Single and Multiple PRV Installations for Both Fire and Non-Fire Cases

PRV Installation Maximum Pressure	*Single Set%*	*Single Accumulated%*	*Multiple Set%*	*Multiple Accumulated%*
Non-Fire Case, 1st PRV	100%	110%	100%	116%
Non-Fire Case, Additional PRV	N/A	N/A	105%	116%
Fire Case, 1st PRV	100%	121%	100%	121%
Fire Case, Additional PRV	N/A	N/A	105%	121%
Fire Case, Supplemental PRV	N/A	N/A	110%	121%

© 2003 by Béla Lipták

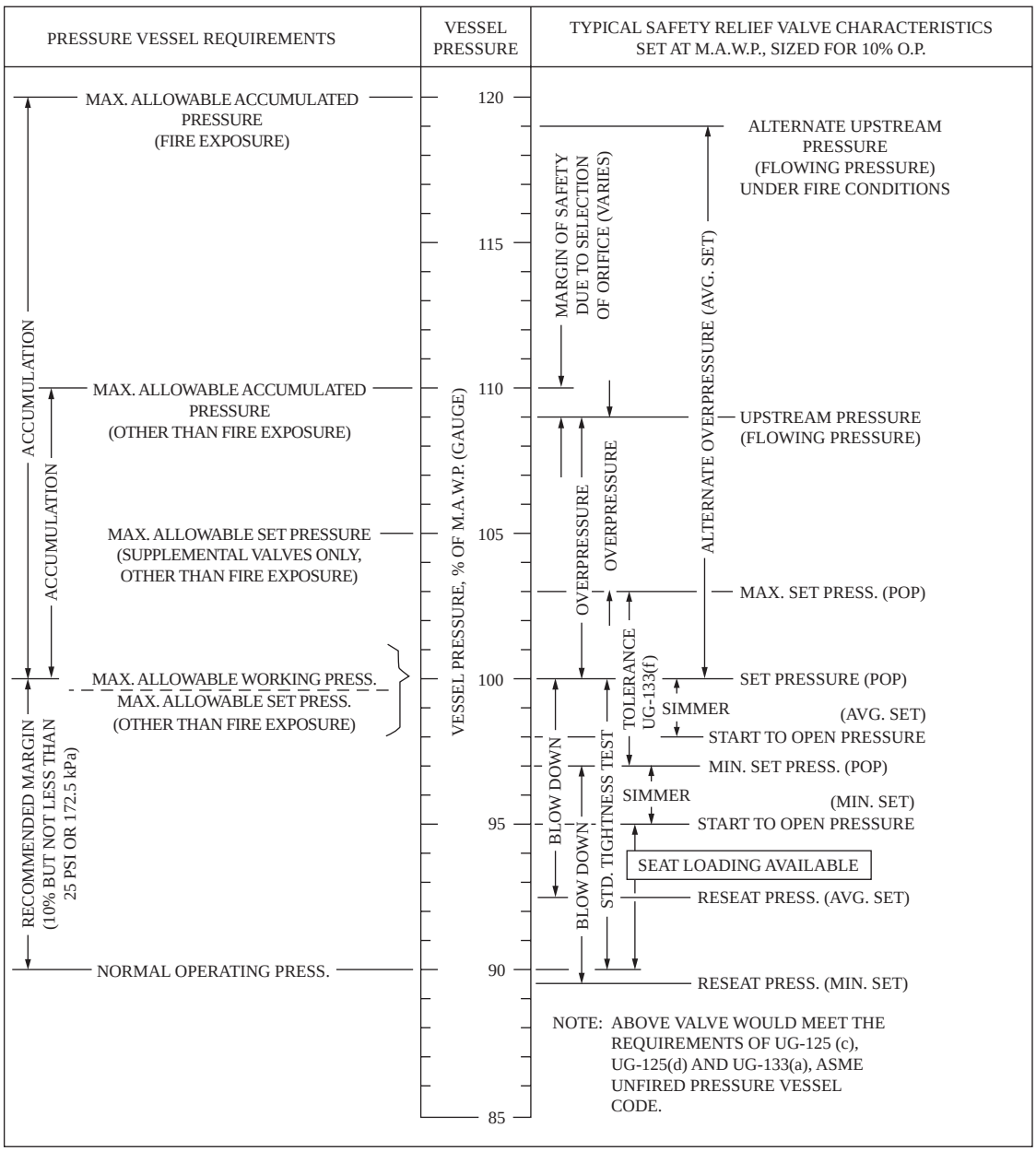

FIG. 7.16x
Characteristics of a single safety relief valve used to protect a pressure vessel having the listed requirements.

small operating load. In such a case, the small valve is set at 100% and sized for 10% accumulation at the operating load, but it will accumulate to 20% under fire conditions. The large PRV is set at 109% and is sized to handle the fire load 10% overpressure. Such a combination of two PRVs will generally reduce leakage quantities (Figure 7.16y).

The use of a pair of PRVs becomes even more attractive if company policy requires the use of two PRVs. Similarly, on low-pressure tall towers, if the API recommendation is followed and therefore the PRV inlet loss is limited to 3% of set pressure, the use of two valves becomes attractive.

Seat Designs, O-Rings, and Temperature Greatly influencing valve tightness are the factors of seating design, cleanliness of the process fluid handled, and installation practices. In the area of seating closure design, some of the mechanical containment designs of the nozzle, disc, and guiding moving parts have been claimed to pay off handsomely in terms of trouble-free service.

The so-called *soft seat designs* and the O-ring seats do much to prevent leakage as long as the PRV does not relieve. However, it is good practice to check the design and question the vendor about what the leakage will be after the PRV

© 2003 by Béla Lipták

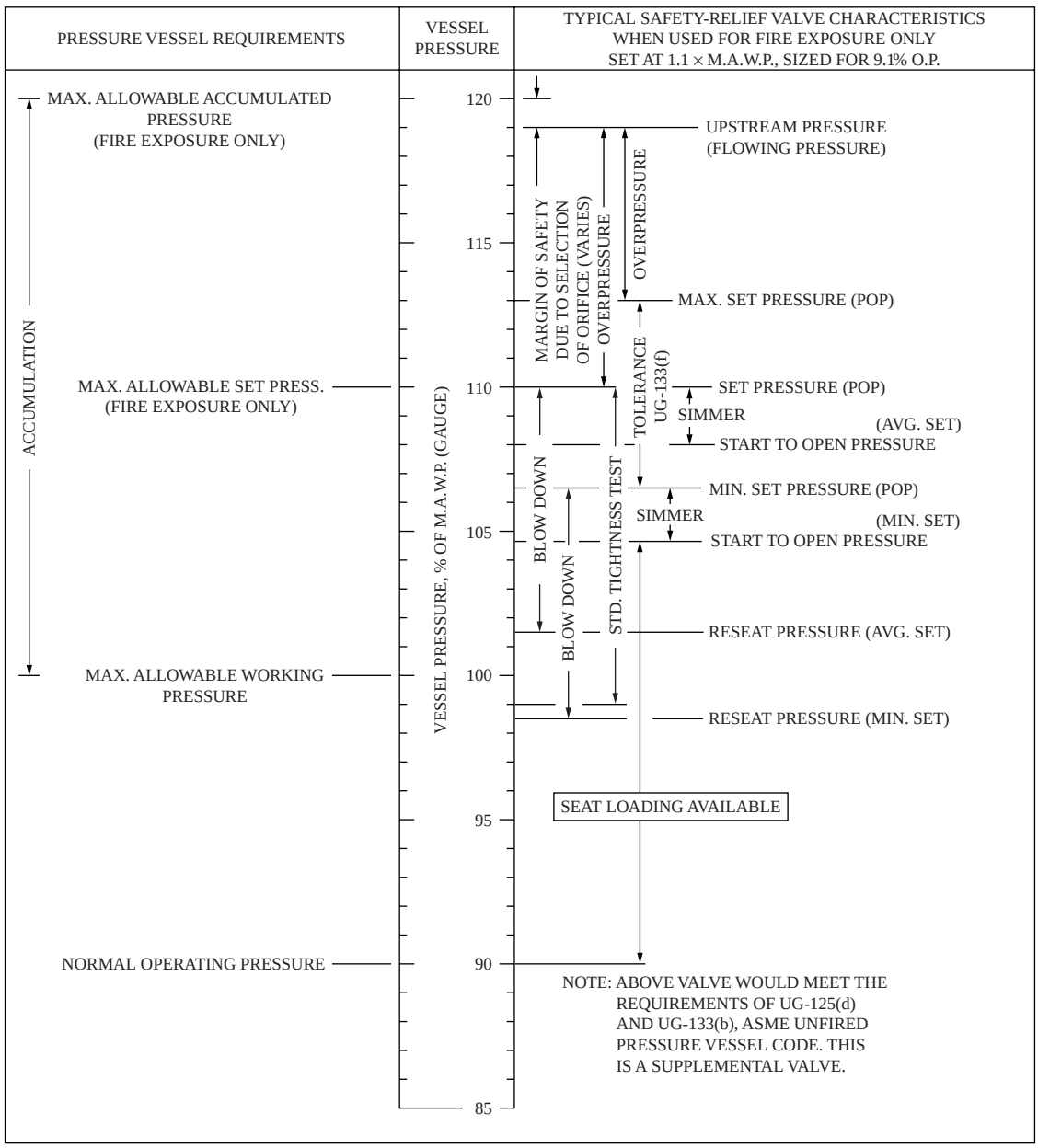

FIG. 7.16y
Illustrating the various pressures in a case where a supplemental valve has been installed to handle the fire load.

reseats. In some designs, the O-ring is actually expected to be shredded or destroyed during relief. Therefore, until the ring is replaced, the PRV will only provide a metal-to-metal secondary seat after the first relief.

Temperature probably provides the most serious limitation on soft seal or O-ring materials. In addition to soft seat sealing, the flexible seat has been well received in some services outside the temperature limits of synthetic seating materials. The knife-edge seat is perhaps the most desirable for services where icing or similar deposits can form on the seat during relief. The knife-edge seat has also been used on liquid services containing fine solids in suspension.

Flatness and Cleanliness Most process service valves as tested and shipped by the manufacturer have a seat finish of less than 5 μin. with a flatness deviation of less than 5 to 15 μin. (0.13 to 0.38 μm). For this reason, even nozzle deformation caused by bolting stresses is a concern.

The method of holding the nozzle in the pressure-containing body to minimize the effects of bolting forces is one of the distinguishing features of some PRV designs. Other design goals include minimizing piping reactions that would tend to deform the nozzle, applying the spring load to the disc, and various disc designs that act to compensate for differential expansion effects. These are refinements that

© 2003 by Béla Lipták

manufacturers have developed as users demanded tighter, longer-lasting valves while the PRV service conditions grew progressively more severe.

The influence of fluid cleanliness on PRV performance is illustrated by contrasting the refinery or chemical industry practices to those of missile service. In a number of refinery and chemical plant applications, experience has shown that the valve will leak once it has opened and reseated. In many plants, it is accepted that you may just as well take it down, clean and lap it, reset it, and reinstall it.

Contrast this with the shop inspection requirements on some missile service PRVs where 200 successive cyclings on clean, high-pressure nitrogen must still leave the valve virtually bubble tight. This requirement is regularly met on a production basis.

PRV INSTALLATION

The inlet and outlet line losses of the individual PRVs are calculated on the basis of their rated capacity, not on their required relieving capacity. This approach should also be used as the basis for sizing PRV manifolds so as to minimize built-up backpressure and PRV chattering.

PRV Location

Pressure relief valves should be placed close to the tank or equipment they are protecting to minimize their inlet pressure losses. Their location should also be selected with the goal of avoiding unstable flow patterns and minimizing inlet turbulence. Therefore, a minimum distance of ten pipe diameters should be provided between such fittings as orifices, elbows, valves, and flow nozzles and the PRV.

Relief valves should be located with full consideration given to the need for convenient maintenance access. Easy and safe access is a very important element in making sure that inspection and testing is regularly performed. If there is no convenient natural access to the valve, the installation of a platform should be considered. PRVs should not be located at the end of long and stagnant horizontal pipes.

PRV Mounting

Vapor relief valves should be mounted on the top of the protected tank and should be connected to its vapor space above the liquid level or to piping that is connected to the vapor space. Liquid service PRVs should be connected below the normal liquid level in the tank. All PRVs should always be mounted vertically, not only because horizontal mounting can adversely affect their operation but also because horizontal mounting violates the ASME code and the API recommended practice.

Pressure relief valves should not be mounted close to vibration or turbulence sources such as orifice plates or positive displacement pumps/compressors. This is because the pressure spikes can cause premature relieving, and the pulsation can alter the PRV's set pressure.

PRVs should not be mounted at the end of horizontal pipes, either. This is because, when the PRV opens, debris such as welding slag, pipe scale, and foreign objects that are present in the horizontal pipe will be transported into the valve and will either cause leaking after the PRV recloses or require immediate maintenance to be performed on the valve.

PRV Inlet Piping

The inlet pipe to all PRVs should be as short and direct as possible and should be the same size or larger than the inlet connection of the valve. The inlet pipe should not connect to locations in the process where unstable or turbulent flow patterns exist. When the PRV is relieving vapors, it should be sloped upward to the PRV so that liquid entrainment would be minimal. If the line has a low point, it should be drained.

If the process is such that the inlet pipe can be plugged, it is recommended to provide a clean, nonreactive liquid purge to keep the inlet line clean. If plugging of the inlet line can be caused by low temperatures, such as generated by the cooling of high-viscosity polymers or by ice formation at ambient temperatures, the PRV inlet line should be heat traced.

PRV Outlet Piping

The outlet pipe size should be the same as or larger than the PRV outlet connection. The outlet pipe should be sized to limit the backpressure when the PRV is relieving so that this backpressure will neither shift the set pressure nor prevent the PRV from operating at its full rated capacity. In case of conventional spring-loaded PRVs, the maximum limit for built-up backpressure is 10% of the set pressure. For PRVs with balanced bellows, it is between 30 and 50%. For pilot-operated PRVs, it is 50% of the set pressure.

The outlet pipe should always be properly drained. The preferred choice is to provide self-draining. When that is not possible, a low-point drain with shut-off valve should be provided, and the drain should be piped to a closed system.

In selecting the materials of construction for the outlet pipe, design engineers should evaluate the possibility of autorefrigeration occurring during PRV relieving. If that is the case, the expected low temperatures should be calculated, and suitable pipe materials should be selected to protect against fracturing the brittle metal.

When the PRV discharges to the atmosphere, long-radius elbows should be used, and both the weight of the outlet pipe and the reaction forces should both be considered in designing the pipe supports. The tail pipes should be angle-cut to reduce both the relieving noise level and the reaction force. Local bylaws should be consulted in setting the allowable noise level, which should be calculated on the basis of API RP 521, Section 5.4.4.3.4, in the 1997 edition.

© 2003 by Béla Lipták

The discharge location should be selected so that, if steam, hot water, or nitrogen is being discharged, it will not injure the operators. The tip of the atmospheric outlet pipe should be provided with both a screen and a weather cap.

Calculating the Reaction Force Large reaction forces generated by the large volumes and high velocities of discharged fluids as the discharging stream makes a 90° turn at the PRV can overload supports, distort manifolds, and cause leakage related accidents—even fire. When the PRV discharges directly to the atmosphere, the outlet piping should be brace supported and, in case of very large valves, even dual outlets should be considered to balance the reaction forces. The reaction force of an open PRV discharge can be calculated using Equation 7.16(15).

$$F = (W/366)\sqrt{[kT/(k + 1)M_w]} + A_oP_2 \qquad \textbf{7.16(15)}$$

where

F = the reaction force in lb
W = the required relief capacity of the PRV in lb/hr
k = the ratio of specific heats of the relieved gases (Table 7.15a)
A_o = the area of the outlet of the discharge pipe at the point of discharge, $in.^2$
T = the flowing temperature of the relieved vapors at the inlet of the PRV in °R
M_w = the relieved gas or vapor
P_2 = the pressure inside the discharge pipe at the point of discharge in PSIG

When the PRV discharge is sent into a closed system, only at points of sudden expansion is it likely that significant reaction forces will exist. The manifold supports in such cases should be designed on the basis of detailed calculations.

PRV Block Valves

Section I of the ASME Boiler and Pressure Vessel Code does not allow the use of block valves at all. In contrast, PRVs protecting nonfired pressure vessels are permitted to be isolated on both their inlets and outlets if on-line maintenance is impossible. In that case, block valves are permitted if they are provided with a spare PRV and if the service they are in has a history of leakage, plugging, or other causes of frequent maintenance.

When isolating valves are used around PRVs, they must be distinguished by special tagging, and the plant operations should be such that only authorized personnel can operate them. It is also important that the open and closed positions be visible and clearly identified. The plant's operating manual should clearly state the required position of these block valves and should also state the reasons why they are locked open or closed. The operating manual should require not only the periodic checking of PRV isolation valve positions but also the checking of their condition.

Multiple PRVs

One situation in which the use of a small and a large PRV is justified on the same tank or equipment is when the process can have two vastly different relieving capacities. In such a case, the smaller valve is needed, because a single large one would chatter when relieving small flows. The other case, when multiple valves of identical size can be used, is when the total relieving area required is more than that of a "P" orifice (Figure 7.16g). Whenever multiple valves are installed, one PRV should be set at the set pressure and the other(s) at 105% of that pressure, as listed in Table 7.16w.

The use of multiple PRVs can extend their life spans and make it easier to keep their inlet line losses below 3% of set pressure. Another advantage can be the reduction of the PRV inventory of the plant, if the use of multiple valves reduces their variety in the plant.

Among the multiple valves, each should have its own nozzle or other direct connection to the protected vessel or equipment. No tree branching of several PRVs from the same main inlet line should be used.

Spare PRVs

PRVs on critical equipment or processes that cannot be shut down should be provided with spares so that the processing operation can continue even when the PRV fails. The installation of a spare PRV is also recommended if the maintenance history of a particular valve is such that it needs maintenance more often than at regular service intervals.

Spare PRVs are also needed on applications in which the valve needs immediate servicing after each time it relieves because the process fluid is corrosive, fouling, or contains solids. Spares are also recommended if the PRVs operate near their extreme design limits, such as at very low or very high temperatures.

Whenever a PRV is spared, the spare valve must be provided with full-bored isolation valves on both its inlets and outlets. Car seal open (CSO) valve designs are required for these applications, because these block valves must be locked open when the spare PRV is in service.

TEST, INSPECTION, AND AUDIT

There are three levels of continuous status maintenance and reviews of pressure safety systems. Periodic testing serves to make sure that the performance of each PRV is within specifications. The purpose of inspections is to check on the quality and reliability of the testing program, whereas the main purpose of the audits is to make sure that the design of the safety systems has been adopted to the various changes that are always occurring in operating plants.

© 2003 by Béla Lipták

PRV Testing

All PRVs should be tested before their installation, after each fire event or case of relieving dirty process fluids, and at the frequency of the service intervals set by the plant. Certified technicians are required to perform the PRV tests. Testing is performed either in a test workshop or, if the PRVs are provided with field test connections, *in situ*.

During the test, technicians should look for signs of tampering, process-related damage, leakage, wear, and corrosion. They should also test the set pressure, blowdown, overpressure, and seat tightness of each PRV and make the required adjustment, if any. To test the tightness of the seat, they should follow API Standard 527.

After the testing is done, the staff should prepare a test report for each PRV and mark the PRV tag with the date and test pressure that was checked.

PRV Inspection

The purpose of the inspection is to ensure that the testing was properly performed and that no foreign objects, welding beads, or rust was left inside the PRVs. The inspector will also check for signs of tampering, leakage, erosion, wear, and corrosion and verify that the PRV flanges are clean and in good condition.

The inspectors will also make sure that the PRV's tag is the same one that appears on the P&ID flow sheet and that it is securely tied to the valve. Finally, the inspectors should also make sure that the performance data obtained during testing and reported in the test report are acceptable for the particular PRV application.

PRV Audit

The audit evaluates the pressure safety of a complete processing unit.[2] The main goal of the audit is to confirm that the tasks in the action list of the previous audit have been performed, and the maintenance strategy of the plant has been properly followed. Any process changes that have occurred since the last audit are carefully evaluates in terms of their effects on the pressure safety systems.

If, because of the process changes, PRVs can be removed, or previously acceptable ones have become oversized or undersized, the audit should reveal that. The final product of an audit is a prioritized new action list that will serve to further improve the operating safety of the plant.

References

1. Farris Engineering, SizeMaster™ Mark IV, Pressure Relief Valve Engineering Software, Version 4.2 (http://www.avrasoft.com/sizemaster).
2. Wong, W. Y., Improve PRV audit, *Hydrocarbon Process.*, November 1998.

Bibliography

ANSI B31.1, *Nonmandatory Rules for the Design of Safety Relief Installation, Power Piping,* Appendix II.

API-RP-520 Parts I and II, *Sizing, Selection, and Installation of Pressure-Relieving Systems in Refineries*, American Petroleum Institute, Washington, D.C., 2000 and 1994, respectively.

API-RP-521, *Guide for Pressure-Relieving and Depressuring Systems,* American Petroleum Institute, Washington, D.C., 1990.

API Standard 526, *Flanged Steel Safety Relief Valves,* American Petroleum Institute, Washington, D.C., 1984.

API Standard 527, *Seat Tightness of Safety Relief Valves with Metal to Metal Seats"* American Petroleum Institute, Washington, D.C., 1991.

API RP 576, *Inspection of Pressure Relieving Devices,* American Petroleum Institute, Washington, D.C., 1984.

API RP 2000, *Venting Atmospheric and Low-Pressure Storage Tanks,* American Petroleum Institute, Washington, D.C., 2000.

ASME Boiler and Pressure Vessel Code, Section I (Power Boilers), Section IV (Low Pressure Heating Boilers), and Section VIII (Pressure Vessels, Division 1), American Society of Mechanical Engineers, New York.

Benedetti, R. P., NFPA 30: an update and a look into the future, *Process Safety Prog.,* 17(1), Spring 1998.

Bernstein, M. D. and Bloomfield, W. J., Malfunctions of safety valves due to flow induced vibrations, Proc.1989 ASME Pressure Vessel and Piping Conference, PVP-154, 155–164.

Bilanin, A. J. and Teske, M. E., Modelling flow through spring loaded relief valves, *Proc. 1990 ASME Pressure Vessel and Piping Conference*, PVP-190, 29–36, 1990.

Brahmbhatt, S. R., Are liquid thermal relief valves needed, *Chem. Eng.*, International ed., 91(10), May 1984.

Burns, M. L., Jr., The practical application of flow test data for safety relief valves and rupture discs used in combination, Paper C380/84, I. Mech. E. Conference, 1984.

Chester, J. R., The best pressure relief valves: simple or intelligent, *InTech*, January 1985.

Coker, A. K., Program sizes compressible flow for discharge piping, *Oil and Gas J.*, 87(50), December 1989.

Constantinescu, S., Sizing gas pressure relief nozzles, *Chem. Eng.*, International ed., 92(9), April 1985.

Crozier, R. A., Jr., Sizing relief valves for fire emergencies, *Chem. Eng.*, International ed., 92(22), October 1985.

Ekmann, M. E., A thematic approach to system safety, *Process Safety Prog.*, 17(3), Fall 1998.

Emerson, G. B., Pressure relief valves: some selection guidelines, *InTech*, 33(2), February 1986.

Emerson, G. B., Pressure relief valve types and selection, *Hydrocarbon Process.*, International ed., 67(5), May 1988.

Folcy, J. D., Tank vents offer safety protection in critical service, *Chem. Process*, 51(6), May 1988.

Frommann, O. and Friedel, L., Analysis of safety relief valve chatter induced by pressure waves in gas flow, *J. Loss Prev. Process Ind.*, 11(4), July 1998.

Gano, J. C., Differential sensing direct control gas storage well safety valve, Society of Petroleum Engineers of AIME, Richardson, TX, 287–294, *Proc. Conf. No. 12675*, 287–294, 1989.

Garucci, V. A. and Mueller, R. T., *Acoustically Induced Piping Vibrations in High Capacity Pressure Reducing Systems*, Exxon Research & Engineering Co., Florham Park, New Jersey, ASME Paper No. 82-WAS/PVP-8.

Going, W. S. and Pringle, R. E., Safety valve technology for the 1990's, Society of Petroleum Engineers of AIME, Richardson, TX, *Proc. Conf. No. 12667*, 545–552, 1989.

Gruber, U., Puppich, P., Noll, E., and Mewes, D., Time dependent behavior of the pressure in an explosion as a basis for the design of pressure vessels and apparatus, *Int. Chem. Eng.*, 31(1), January 1991.

Hendershot, D. C., Inherently safer chemical process design, *J. Loss Prev. Process Ind.*, 10(3), 1997.

© 2003 by Béla Lipták

Jones, B. G. and Duckett, R. C., Thermographic survey of the integrity of a process plant pressure relief system, *Plant Op. Prog.*, 4(3), 1985.

King, R., *Safety in the Process Industries*, Butterworth-Heinemann, London, 1990.

Kletz, T., *Learning from Disaster*, Gulf Publishing, Houston, TX, 2001a.

Kletz, T., *Learning from Accidents*, Gulf Publishing, Houston, TX, 2001b.

Lai, Y. S., Design principles of safety valve on line testing device, ASME, PWR 45, *Proc. Conf. No. 13245*, 6, 1989.

Lai, Y. S., *Conventional Spring Loaded Relief Valves Subjected to Back Pressure*, ASME Pressure Vessel and Piping Division, New York, PVP 180, 1989.

Lees, F. P., *Loss Prevention*, Gulf Publishing, Houston, TX, 1996.

Leismer, D. D., Redundant control subsurface safety systems, ASME Petroleum Division, New York, PD 29, *Proc. Conf. No. 13045*, 1990.

Leung, J. C., The omega method for discharge rate evaluation, *Proc. Int. Symp. Runaway Reactions and Pressure Relief Design*, 367, American Institute of Chemical Engineers, New York, 1995.

Morley, P. G., Sizing pressure relief valves for gas duty, *Chem. Eng. J.* (Rugby-GB), 463, August 1989.

Moss, D. R., *Pressure Vessel Design Manual*, Gulf Publishing, Houston, TX, 1987.

Muser, W. and Schauki, N., *New Requirements for Safety and Relief Valves*, ASME Pressure Vessel and Piping Division, PVP-180, 1989.

Newman, G., Careful consideration in selecting safety valves, *Valves and Actuators for the Process Ind.*, BVAMA 50th Anniv. Suppl., April 1989.

Papa, D. M., How back pressure affects safety relief valves, *Hydrocarbon Process.*, 62(5), May 1983.

Pavel, A. and Dascalu, C., Thermal design of industrial flares, part III, *Chem. Eng.*, International ed., 30(3), July 1990.

Peicheng, H., Pusheng, Z., and Elkouh, A. F., Relief valve and safety membrane arrangement in lieu of surge tank, *Energy Eng.*, 115(2), August 1989.

Rodmill, F., *Human Factors in Safety-Critical System*, Gulf Publishing, Houston, TX, 1997.

Sallet, D. W. and Somers, G. W., Flow capacity and response of safety relief valves to saturated water flow, *Plant Op. Prog.*, 4(4), October 1985.

Simiskey, P. L. and Faulkner, C. R., Better relief system design, *Hydrocarbon Proc.*, 68(5), May 1989.

Simon, U., Rauffman, N., and Schafer, H., *Testing of Safety Related Valves of PWR and BWR Power Plants*, ASME, Pressure Vessel and Piping Div., P – VP-180, 1989.

Sumathipala, K., Venart, J. E. S., and Stewart, F. R., Two phase swelling and entrainment during pressure relief discharges, *Haz. Mat.* (Amsterdam), 25(1–2), October 1990.

Taylor, C., Designing for safer pressure relief, *Process Eng.* (UK), 70(12), December 1989.

Theisen, J. T., Chatter free relief valves, *InTech*, July 1986.

Theisen, J. T., Calculating back pressure in relief valves and piping, *InTech*, March 1988.

Van Zijl, F. M. J., Indirect working safety valve, *PT/Procestech* (Netherlands), 38(11), November 1983.

Watson, J., Stability of a two stage pressure relief valve, *Proc. 1989 American Control Conf.*, 2, 1503–1507, 1989.

Wong, W. Y., *Safer Relief Valve Sizing, Chem. Eng.*, International ed., 96(5), May 1989.

Wong, W. Y., Protect plants against overpressure, *Chem. Eng.*, June 2001.

Wong, W. Y., Improve PRV audit, *Hydrocarbon Process.*, November 1998.

Woolfolk, W. and Sanders, R., *Process Safety Relief Valve Testing*, PPG Industries, CEP, March 1984.

© 2003 by Béla Lipták

7.17 Rupture Discs

D. S. KAYSER (1969, 1985) **B. G. LIPTÁK** (1995) **D. MILLER** (2003)

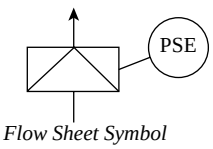

Flow Sheet Symbol

Types:	Forward Acting and Reverse Acting (see Table 7.17a)
Sizes:	0.18 to 44 in. (4.8 mm to 1.12 m)
Burst Pressure Ranges:	0.25 to 120,000 PSIG (0.017 to 8274 barg)
Maximum Operating Pressure:	50 to 90% of marked burst pressure depending on design
Maximum Operating Temperatures and Materials:	See Table 7.17b
Rupture Tolerance:	±5% for B.P. > 40 PSIG (2.75 barg) and ±2 PSI (1.04 bars) for B.P. < = 40 PSIG (2.75 barg)
Cost:	See Figure 7.17c
Regulatory Requirements:	American Society of Mechanical Engineers UD Code Symbol Stamping; 97/23/EC Pressure Equipment Directive & CE Marking
Partial List of Suppliers:	BS&B Safety Systems (www.bsbsafetysystems.com) Carbone Lorraine (www.chem.carbonelorraine.com) Continental Disc Corp. (www.continentaldisc.com) Elfab Limited (www.elfab.com) Fike Corporation (www.fike.com) Hoke Inc. (www.hoke.com) OSECO (www.oseco.com) Parker Hannifin Corp. (www.parker.com) Rembe (www.rembe.com) Swagelok (www.swagelok.com) Zook Enterprises (www.zookdisk.com)

INTRODUCTION

Overpressure may occur due to thermal expansion, equipment or control failure, misoperation, external fire, runaway reaction, or a combination of these. The rupture disc has been recognized for many years as a suitable device for relieving overpressure. The rupture disc in its simplest form is a metallic or graphite membrane that is held between flanges and that is designed and manufactured to burst at some predetermined pressure and corresponding temperature. Rupture discs, which are generally installed on or directly above a pressurized vessel nozzle, can be looked upon as the weak link in the pressure system. They will burst and relieve pressure before other system components fail. Another common use of a rupture disc is as single use, fast acting valve in fire suppression systems, aerospace fuel systems, petroleum well drilling tools, laboratory test apparatus, etc.

DEFINITIONS

Rupture Tolerance—The tolerance range on either side of the marked or rated burst pressure within which the rupture disc is expected to burst. Rupture tolerance may also be represented as a minimum–maximum pressure range. Also referred to as performance tolerance in International Organization for Standardization (ISO) standards.

© 2003 by Béla Lipták

TABLE 7.17a
Typical Characteristics of Rupture Disc Types

	Forward Acting					Reverse Acting	
Characteristic	*Prebulged (FAB)*	*Composite (FAC)*	*Scored (FAS)*	*Flat*	*Graphite*	*Knife (RAK)*	*Scored (RAS)*
Cost	Low	Med	High	Med	Med	Med	High
Max operating ratio	70%	80%	90%	50%	80%	90%	90%
Life under cyclic conditions @ max operating ratio	High	Low	Med	Low	Med	High	High
Fragmenting	Yes	Varies	No	No	Yes	No	No
Vacuum resistant	With support	With support	Yes	With support	With support	Yes	Yes
Low pressure	Yes	Yes	Yes	Yes	Yes	Yes	Yes
High pressure	Yes	No	Yes	No	No	No	Yes

TABLE 7.17b
Rupture Disc Materials and Operating Temperatures

Material	*Maximum Op. Temp.*
Aluminum	250°F (121°C)
Graphite	430°F (221°C)
Hastelloy® C276	900°F (482°C)
Inconel®/Alloy 600	1000°F (538°C)
Monel®/Alloy 400	800°F (427°C)
Nickel 200	750°F (399°C)
Silver	250°F (121°C)
Tantalum	500°F (260°C)
Teflon®	500°F (260°C)
316 stainless steel	900°F (482°C)

Manufacturing Range—A range around the specified burst pressure within which the marked or rated burst pressure must fall. Manufacturing range is not used in ISO standards.

Operating Ratio—The ratio of the maximum operating pressure to the marked burst pressure expressed as a percentage (common US definition). The ratio of the maximum operating pressure to the minimum of the performance tolerance expressed as a percentage (common ISO definition).

Nonfragmenting—A rupture disc design that when burst, does not eject fragments that could interfere with the operation of downstream equipment (i.e., relief valves).

CODE REQUIREMENTS

Significant changes in the governing codes and standards regarding rupture discs have occurred since the last edition of this handbook and continue to occur. Compliance with the applicable standards can be complex and is beyond the scope of this work. However, key points relating to the most common standards are summarized. It should also be noted that certain standards have specific testing requirements that are different than or exceed normal commercial practice and can increase the cost.

The American Society of Mechanical Engineers (ASME) Section VIII Division 1 (ASME Code) is the primary pressure vessel code used in North America and is also used in various regions of South America, Asia, and the Middle East. It is also used as a company standard by many multinational companies. In the 1997 addenda of the 1995 edition, significant changes were made to the rupture disc requirements. ASME UD code symbol stamping was added, requiring design verification testing and third-party approval as well as changes to the methods used for sizing rupture disc devices. The 2001 edition incorporated additional changes in certification and sizing by recognizing flow resistance values for rupture discs on liquid applications.

ISO 6718 is used primarily in Europe as well as parts of South America, Asia, and the Middle East. The most significant differences in these rules from the ASME rules are in the area of sizing. The coefficient of discharge is different in some cases, and sizing methods beyond the coefficient of discharge method are offered although not described in detail.

ISO 4126–2 and 4126–6 are new standards that are going through their final approvals as of this writing. These standards are based on ISO 6718 with the objective of meeting the requirements of Directive 97/23/EC (pressure equipment directive [PED]). Marking of the rupture disc device with the CE mark identifies it as meeting the requirements of the PED and available for use within the European Union.

The American Petroleum Institute (API) RP520, an industry standard, has more how-to information and in most cases supports the requirements of ASME Section VIII Division 1. RP520 also goes beyond the ASME Code by providing additional guidance in sizing and applying pressure relief devices.

RUPTURE DISCS VS. RELIEF VALVES

Rupture discs and relief valves can be used individually, in series, or in parallel. The greatest difference between relief valves and rupture discs is that relief valves are reclosing devices and rupture discs are not.

© 2003 by Béla Lipták

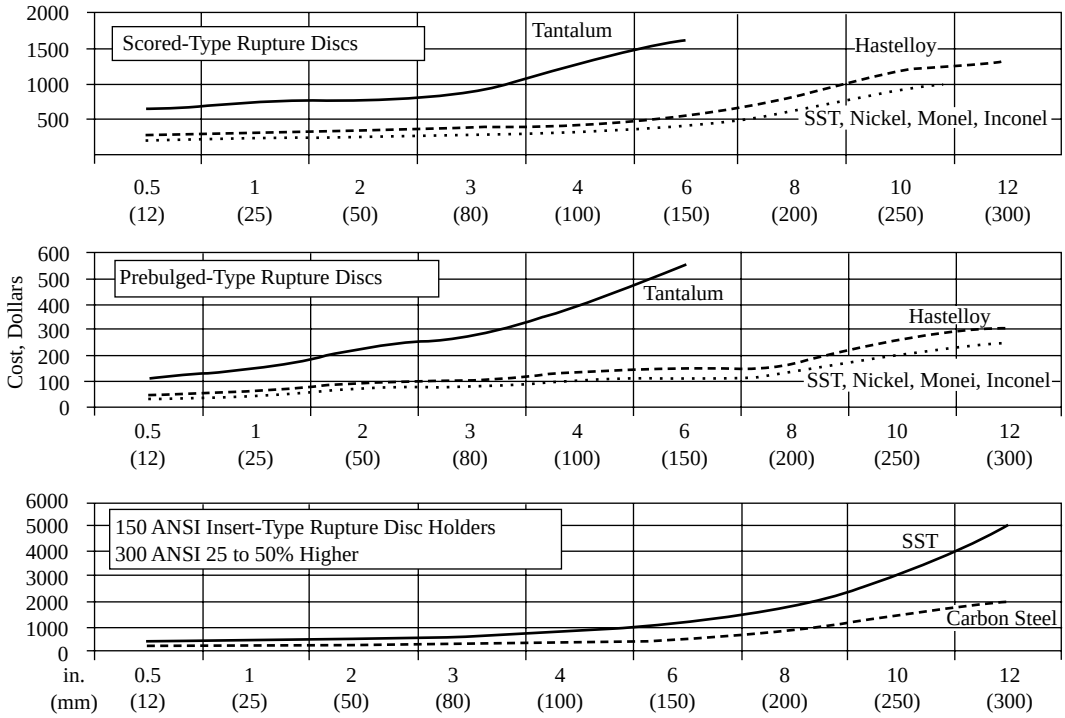

FIG. 7.17c
Costs of rupture discs and holders.

As the process pressure starts to build, a relief valve will gradually open and then reseal the process once the pressure drops. The rupture disc will remain sealed tight until its burst pressure is reached. In order to reclose the process, the disc must be replaced. It follows from this that the rupture disc can be used as a tight seal whereas the relief valve cannot. The only time a rupture disc will leak is if it develops pinholes due to corrosion, or if hairline cracks develop due to metal fatigue caused by the stress of pressure cycling.

A second area of difference is in the construction of the two relief devices. Because rupture discs have a relatively simple construction, they are commercially available in an extremely wide variety of materials at reasonable cost and on reasonable delivery schedules. This cannot be said for relief valves, which are generally limited to copper alloy, steel, and stainless steel constructions. They can become very expensive, long-delivery items if special materials are required.

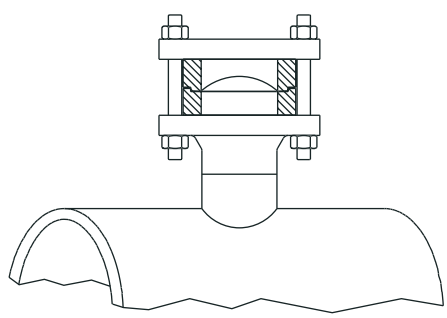

FIG. 7.17d
Rupture disc as primary relief device.

WHEN TO USE A RUPTURE DISC

With the code requirements and the comparison between discs and valves in mind, the following rules can be used on where and when to specify rupture discs.

As a Primary or Sole Relief Device

As shown in Figure 7.17d, the rupture disc may be used to relieve an inexpensive and inert material to air if the loss of process pressure can be tolerated. At the other extreme, rupture discs may be used to vent highly toxic, poisonous, or corrosive materials into a vent surge or flare header system. The advantage of the rupture disc for this application is that under normal conditions, it will not allow any leakage.

As a Supplemental Relieving Device

When a relief valve is the primary relieving device, the rupture discs are set at the higher relieving pressures as permitted by the ASME Code. The relief valve will open on mild overpressures, relieve a small amount of material, and reclose the process. The rupture disc will not function unless a more extreme condition arises (Figure 7.17e). When such a condition arises, the process must commonly be shut down. Therefore, the complete system pressure loss caused by the rupture of the disc is acceptable.

© 2003 by Béla Lipták

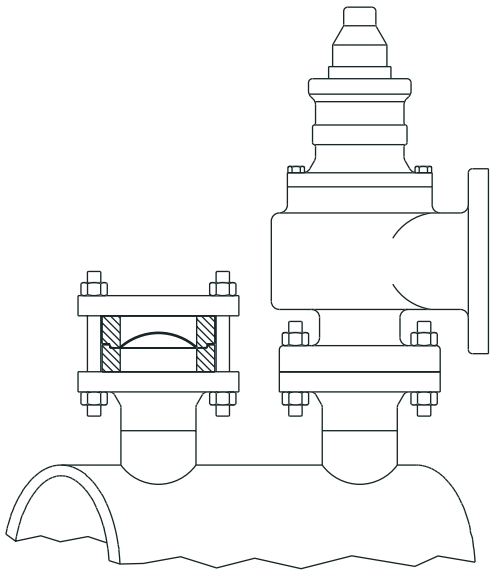

FIG. 7.17e
Rupture disc as supplemental relief device.

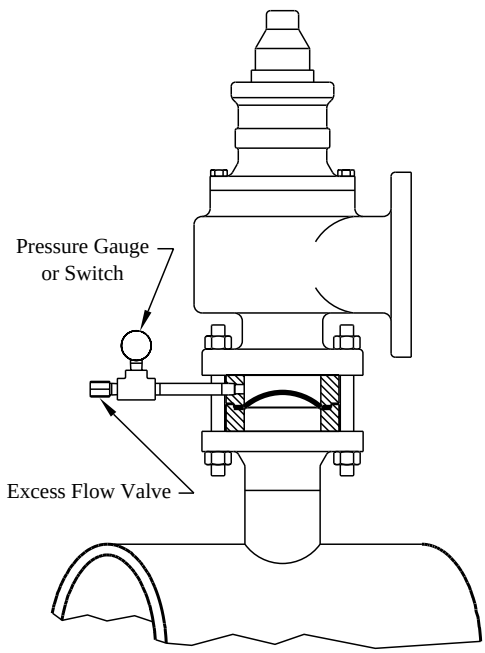

FIG. 7.17f
Rupture disc installed upstream of relief valve.

In addition, the causes of more extreme overpressure, such as external fire, generally require a larger venting area. For a given venting area, the rupture disc is less expensive than the relief valve.

Upstream of a Relief Valve

Being mounted upstream to relief valves is a very useful application for rupture discs (Figure 7.17f). Under normal conditions the rupture disc is sealed tight and protects the relief valve from being contacted by corrosive, plugging, hazardous, freezing, or regulated processes. If the maximum allowable working pressure is exceeded, the disc will break and the relief valve will start to relieve the pressure. As the pressure drops, the valve will shut and reclose the process. Thus, the best characteristics of both devices are utilized.

Another important advantage in this type of installation is that the rupture disc may be used as a break point in piping specification. This means that materials of construction for the rupture disc and the inlet flange of the disc must be compatible with the process. However, the downstream flange of the rupture disc, the relief valve, and all downstream piping may be garden-variety materials such as carbon steel. This is permissible because the rupture disc can be relied on to seal the process away from the downstream items. The resultant savings from using lower-grade downstream materials will in many cases more than pay for the rupture disc.

Because the rupture disc is a differential pressure (d/p) device it is important to prevent a buildup of pressure between the disc and the relief valve. This is accomplished by the use of a pressure switch and/or a pressure gauge and excess flow valve (Figure 7.17f).

Downstream of a Relief Valve

This installation of a rupture disc downstream of a relief valve may be desired when the valve discharges to a vent header that might contain corrosive vapors (Figure 7.17g). A low-pressure rupture disc with a burst indicator can also be used as a means to detect leakage through the relief valve.

Precautions should be taken to prevent the buildup of pressure between the valve and rupture disc due to valve leakage, if conventional relief valves are used. A better option

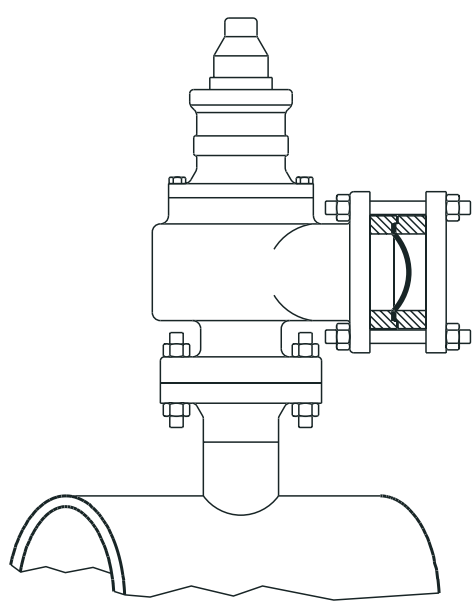

FIG. 7.17g
Rupture disc installed downstream of relief valve.

© 2003 by Béla Lipták

is to use bellows sealed or pilot-operated relief valves (Figures 7.16c, 71.6q, and 7.16s), whose set pressure is unaffected by the accumulated pressure between the valve and rupture disc. The rupture disc should also have sufficient opening to permit at least as much flow as the rated capacity of the valve.

Explosion Relief

In comparison with relief valves, rupture discs open faster and provide more relief area. Be aware however that the methods for sizing rupture discs (or explosion vents) is quite different than that for traditional pressure relief and the required relieving areas can grow quite large. See the National Fire Protection Association (NFPA) 68 or Verein Deutscher Ingenieure (VDI) 3673 for guidelines regarding explosion relief.

RUPTURE DISC TYPES AND FEATURES

Rupture discs can be classified in two general categories: forward acting or reverse acting. Forward acting discs are pressurized on the concave side of the disc such that the material in the dome of the disc is subjected to tensile stresses (Figure 7.17d). Flat discs are also considered to be forward acting. Forward acting rupture discs can be prebulged, composite, scored, flat, and graphite.

Reverse acting discs are pressurized on the convex side of the disc such that the material in the dome of the disc is subjected to compressive stresses. Reverse acting types include those that use knife edges to cut the disc membrane and are scored (Figure 7.17h). The vast majority of recent rupture disc development has been in the area of reverse acting designs.

Nonfragmenting Discs

Early rupture discs were prebulged solid metal discs that burst in tension and therefore could release metal fragments. These fragments could prevent relief valves from reseating. The newer rupture disc designs protect against this by either using tension-loaded scored or slotted metal discs (with Teflon seals), reverse-buckling discs with knife-edge cutters, or reverse-buckling discs that are preweakened (scored along lines), so that they burst with full opening without fragmentation (Figure 7.17i).

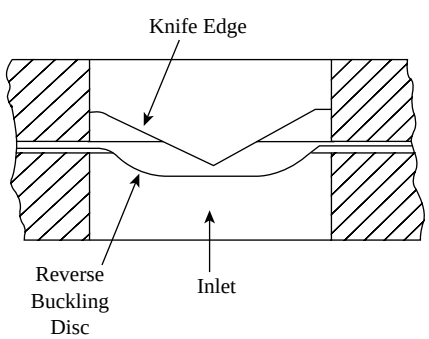

FIG. 7.17h
Reverse buckling, knife-edged design.

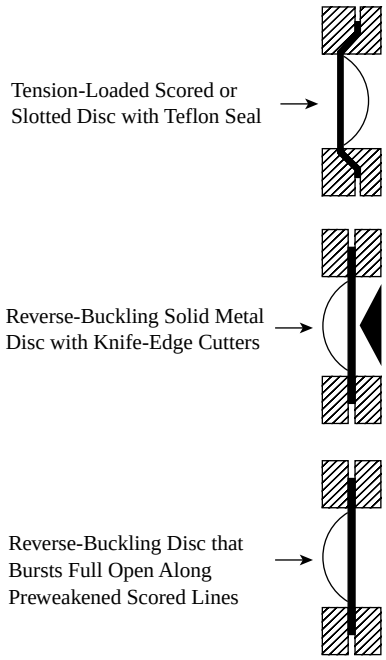

FIG. 7.17i
Disc designs which prevent the fragmentation of the disc.

Graphite Discs

Figure 7.17f shows the installation for a metal disc and Figure 7.17j shows the installation for a graphite disc. As can be noted, the graphite disc requires some extra piping to guarantee its successful operation. First of all, it is not good practice to allow a graphite disc to rupture directly into a relief valve.

The reason is that a graphite disc will fragment rather than tear as a metal disc does. Since the graphite fragments can jam or restrict the operation of a relief valve, it is necessary to provide some kind of downstream pocketing to catch the fragments. A further difficulty arises once the relief valve recloses. If the graphite fragments are pocketed directly over the vessel nozzle, they will drop back into the tank. They can then get into the piping and damage pumps and instruments.

For this reason, the entire relief assembly is shown offset from the vessel nozzle, and an additional pocket is shown upstream of the graphite disc flanges. Graphite discs are best suited for corrosive applications, because they resist almost all chemicals. Another consideration is the margin between normal working pressure and burst pressure, which is about 30% in the case of metal discs because of fatigue. In case of graphite discs, which do not fatigue, this margin can be reduced to 20 to 25%.

© 2003 by Béla Lipták

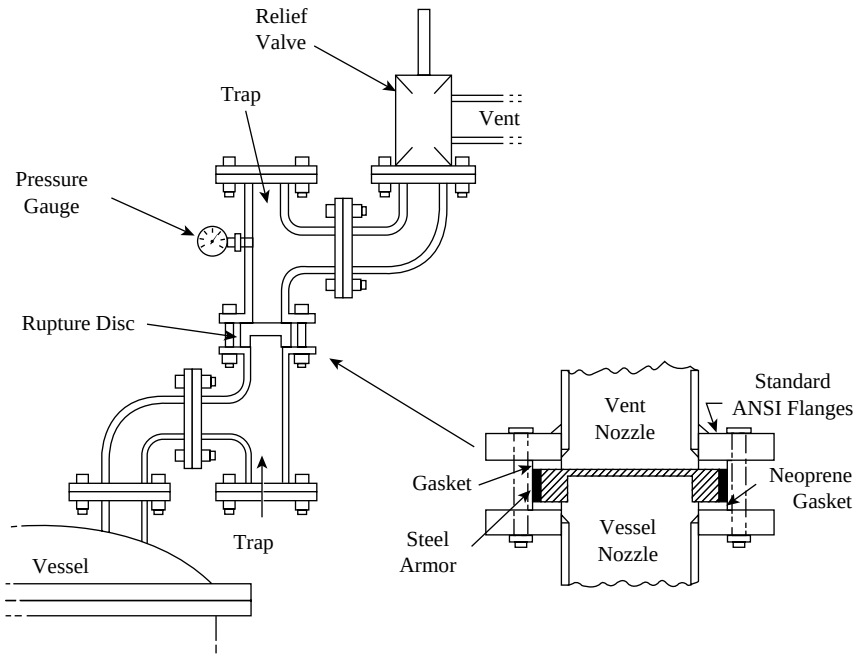

FIG. 7.17j
Graphite rupture disc installed upstream of relief valve.

Vacuum Supports

Some rupture disc models have the capability to withstand vacuum either with or without a vacuum support. A vacuum support typically provides additional strength for the dome of the disc to prevent its collapse. Many models will collapse when exposed to vacuum on the process side so it is important to always check if vacuum could be present during startup and shutdown conditions or under normal operation. Cooling of closed systems is a common cause of developing vacuum and causing rupture disc failure, if this possibility is overlooked when specifying the rupture disc.

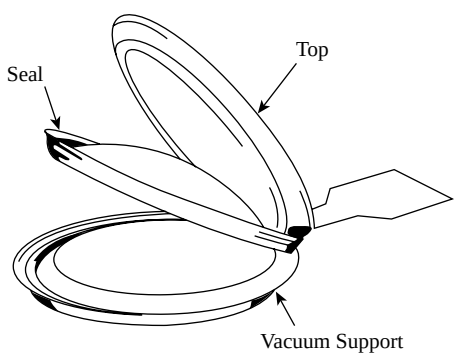

FIG. 7.17k
Composite rupture disc assembly.

Back-Pressure

Similar to vacuum, some rupture disc models have the ability to withstand some back-pressure, while others require special supports to prevent damage or collapse of the dome. Rupture discs that discharge to common headers often are exposed to some low levels of continuous back-pressure and the possibility of periodic increases due to discharges from other sources into the header. Be aware that the presence of back-pressure will cause an equivalent increase in the burst pressure of the rupture disc.

Although not as often as in the past, some users perform in place relief valve testing by pressurizing the cavity between the disc and relief valve until the valve opens. In a spring-loaded relief valve, this test does not give accurate data on the popping pressure or blowdown of the relief valve, but it does confirm that the valve is not frozen shut. When such test is performed, the rupture disc must have the ability to withstand a back-pressure equivalent to the set pressure of the relief valve.

Margin between Operating and Burst Pressures

A second commercially available disc construction that may be operated at 75 to 80% of the burst pressure is as shown in Figure 7.17k. This disc consists of a relatively weak disc (seal) plus a heavier metallic backup plate that has been scored or punched so that it will open like orange peels when burst pressure is reached. This construction is less subject to deterioration due to metal fatigue than the plain disc is.

The reverse-buckling rupture disc constructions may be operated to 90% of the rated bursting pressure. Figures 7.17h and 7.17l show the reverse-buckling, knife-edge designs. Rupture discs that are prebulged can be installed with the bulge toward the outside. The reverse-buckling disc is

© 2003 by Béla Lipták

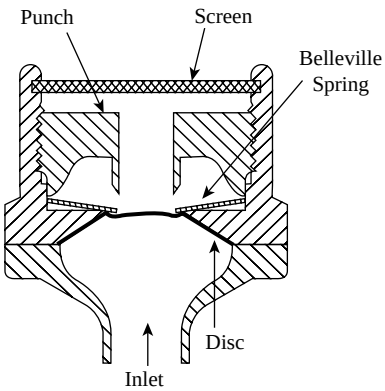

FIG. 7.17l
Belleville spring can provide accurate back-loading for shear discs.

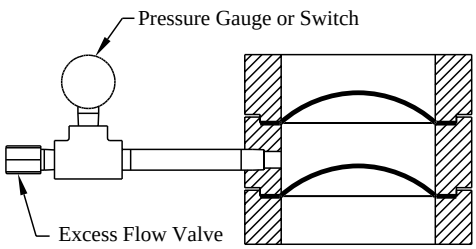

FIG. 7.17m
Double disc assembly.

installed with the bulge facing into the process. Because of this, the disc is not as sensitive to high pressures and pressure cycling. Once the bursting pressure is reached, the reverse-buckling disc will snap its prebulge to the downstream side. As the bulge passes from the upstream to the downstream side, it is cut into segments by sharp knife edges placed against the disc, allowing the process to vent.

Dual Discs or Back-Pressure Loading

There are other disc constructions and methods of installation that allow higher operating to burst ratios. One method is to use two identical discs in series. The idea here is to assume that the first disc will fatigue and fail or leak prematurely because of high normal pressure operation, but the second one will then take over to operate satisfactorily for a period of time. The first disc must, of course, be replaced at the earliest opportunity. A pressure gauge with maximum pointer and an excess flow valve is installed in the pocket between the two discs (Figure 7.17m).

Finally, it is possible to load a back-pressure artificially on the rupture disc. The back-pressure reduces the differential across the rupture disc and allows the normal operating pressure to be any desired percent of the rupture pressure. Back-pressure is unloaded by an external venting system when process overpressure occurs. Here again, this is not a self-contained system; it relies on the proper operation of external components.

Special Applications

Pressure Cycling and Water Hammer A common cause of rupture disc failure is fatigue failure due to pressure cycling. The fatigue life of the disc is a function of the amplitude, frequency, and peak value of the pressure. When specifying rupture discs, both the operating ratio and the severity of pressure cycling should be considered. In general, reverse acting rupture discs tend to provide the best life in severe pressure cycling environments.

The effects of water-hammer on rupture discs should also be considered in liquid full (hydraulic) systems. The rupture disc is a d/p device and, due to its low mass, it can respond to very high amplitude, short duration pressure spikes such as water-hammer. Discs that have burst due to water-hammer often exhibit only partial opening due to a lack of sustained pressure. To avoid this type of problem, it is important to avoid rapid opening or closing of valves in these systems.

Two-Way Relief Rupture discs may be used where two-way relief is required. There are commercially available discs for this purpose. One common installation sketch is shown in Figure 7.17n. The system requirements are as follows. A highly corrosive process is unstable above a certain temperature. Therefore, it is necessary to quench the reaction if the temperature rises above this point. Further, due to its corrosive nature, it is decided to vent the process into a surge system in case of process overpressure (rupture disc as primary relief).

This application calls for a rupture disc to vent overpressure and for a two-way rupture disc to isolate the process away from the quench valve and to prevent quench leakage into the process. The solution is to specify a two-way rupture disc that will burst into the tank if over-temperature occurs, but isolate the valve under other circumstances.

Self-Cleaning and Corrosive Services Many specialized rupture disc and holder designs are available for unique applications and circumstances. Bidirectional designs are used to provide overpressure protection as well as vacuum protection for low pressure storage vessels (Figure 7.17n).

There are several variations of rupture discs available for use in processes where product buildup and plugging of the inlet pipe is a concern. Some designs use the process flow to keep the disc surface free of buildup (Figure 7.17o). Other devices are designed to minimize the space for product buildup by mounting the rupture disc flush with the vessel or pipe wall such as in plastic extrusion equipment (Figure 7.17p).

Double disc assemblies (Figure 7.17m) are also often specified for highly corrosive applications. The space between the discs is monitored and, when leakage due to

© 2003 by Béla Lipták

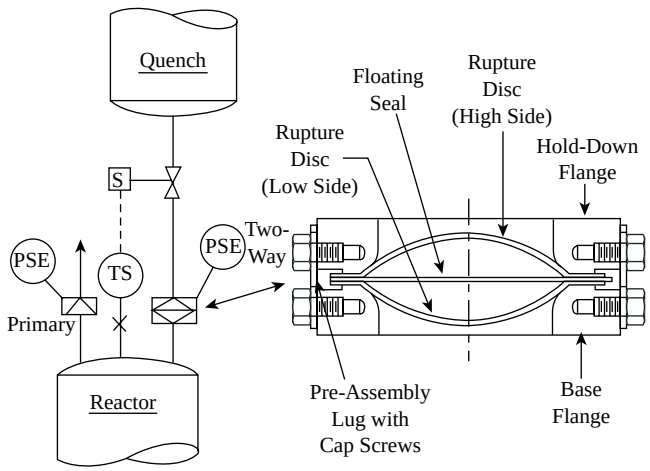

FIG. 7.17n
Application where a two-way rupture disc is used.

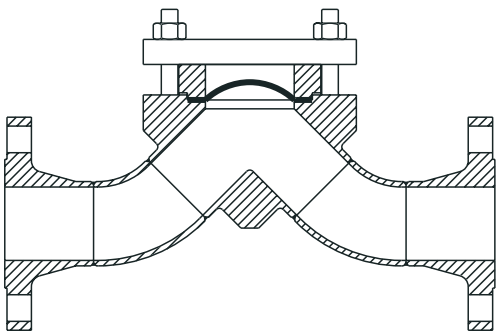

FIG. 7.17o
Design to prevent plugging.

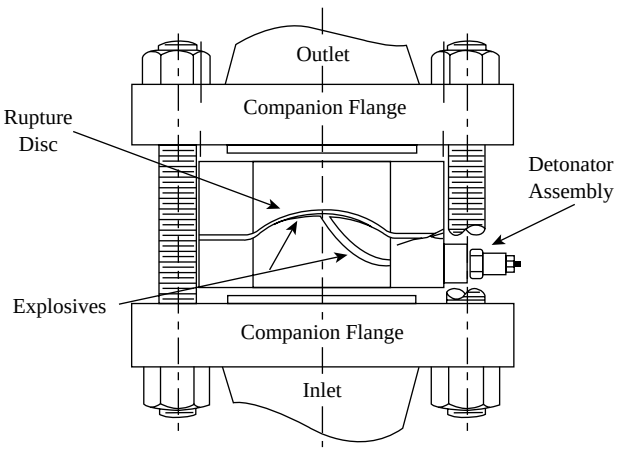

FIG. 7.17q
Detonator actuated deluge disc.

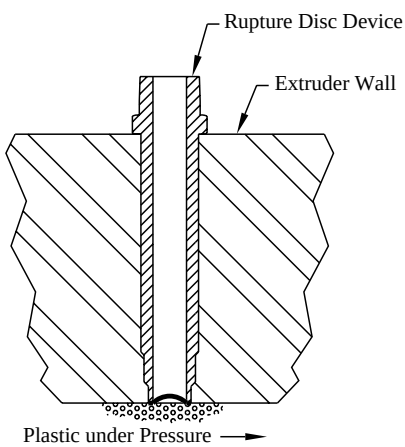

FIG. 7.17p
In-line design for extruder application prevents product buildup.

corrosion is detected, the process can be brought down. By manipulating the pressure between the two discs, a double disc assembly can also be used as a fast acting valve. In all double disc applications consult the rupture disc manufacturer to ensure proper specification for the intended use.

Explosive Actuated Vents Another technique is to use explosive-actuated rupture discs that do not rupture due to the pressure forces alone. The explosion is ignited by a pressure switch that senses process overpressure and closes an electric circuit to ignite the explosive charge. This is not a self-contained unit and its successful operation is dependent on several outside components plus a reliable power source (Figure 7.17q).

SELECTION AND SPECIFICATION

The selection and specification of rupture discs can be a daunting task due to the wide range of safety, operational, and cost considerations and the availability of a large variety of products with varying characteristics. The selection process is an iterative one, especially when it comes to specifying a disc model. Each rupture disc design has characteristics that make it more or less suitable for a particular application.

© 2003 by Béla Lipták

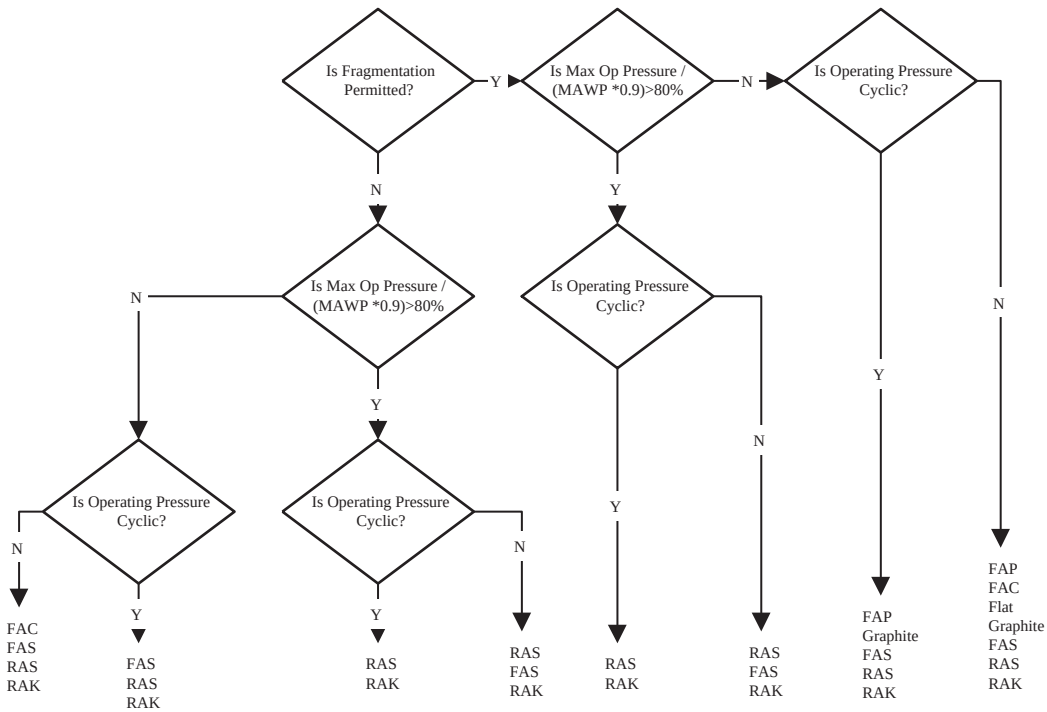

FIG. 7.17r
Method for selecting rupture disc type.

As to disc characteristics, Table 7.17a provides some general guidelines and Figure 7.17r illustrates one systematic method of using basic application information to narrow down the choice of suitable rupture discs. Certainly there are exceptions and the manufacturer's data sheets should be carefully examined prior to specifying a particular model. If in doubt about rupture disc selection or specification, contact a manufacturer for assistance.

Material Selection

Temperature and corrosion are the two primary considerations when selecting the rupture disc material. From a temperature perspective, the material is selected based on the expected temperature when it is expected to burst and also taking into consideration the normal operating temperature. Since metals lose strength as they are heated, the disc material should be selected to withstand the highest expected process temperature with some margin to spare (Table 7.17b). High-temperature applications will also accelerate metal fatigue and creep. Thus temperature becomes a factor where high normal pressures or pressure cycling is encountered.

Rupture discs are readily available in a variety of corrosion resistant alloys (Table 7.17b). Other materials that have been used successfully include niobium, Hastelloy® B, and Hastelloy C22. Graphite can be a good answer to some corrosion problems because it resists almost all chemicals, but keep in mind that the resin binder is typically the limiting factor in regard to temperature or corrosion.

In addition to the option of using solid materials, it is also possible to get the discs plated; coated; or lined with Teflon®, tantalum, gold, Kel-F®, polyethylene, urethane, etc. Coatings should not be heavily relied upon to prevent corrosion of the rupture disc as thermal cycling and damage due to handling often compromise the corrosion-resistant boundary. Consider coatings to provide only a level of protection.

Burst Pressure and Manufacturing Range

Most rupture discs are not marked at the specified burst pressure but are sold with a manufacturing range. This is a tolerance applied to the specified burst pressure within which the rated or marked pressure will fall. The purpose of the manufacturing range is to minimize the amount of time it takes to produce the rupture disc, resulting in a reduced manufacturing cost. The smaller the manufacturing range, the higher is the cost of manufacturing.

Most rupture disc products introduced since 1990 use three manufacturing ranges: +0/–10%, +0/–5%, and 0%. Since the positive side of the range is always zero, the specified burst pressure can be the maximum allowable working pressure (MAWP) or any other burst pressure that is selected.

Many rupture disc models have manufacturing ranges such as +6/–3%. In these cases the user should realize and should be warned that if the specified burst pressure is at the MAWP, it is very possible that the rupture disc received will be marked above the MAWP.

© 2003 by Béla Lipták

Operating Ratio Another aspect of manufacturing range is its relationship to operating ratio. Once the specified burst pressure and the manufacturing range has been selected, it has to be checked against the operating pressure to insure that the recommended operating ratio has not been exceeded. For example:

A reverse acting rupture disc has a 90% operating ratio
If the specified burst pressure = 100 PSIG @ 72°F
The manufacturing range = +0/–10%
The maximum operating pressure = 85 PSIG
The calculated minimum marked burst pressure = 100 × 0.9 = 90 PSIG
And therefore the calculated operating ratio of 85/90 = 94% exceeds the recommended 90%

A solution for this case is to specify a reduced manufacturing range such as +0/–5%.

In that case, the calculated minimum marked burst pressure = 100 × 0.95 = 95 PSIG, and the calculated operating ratio = 85/95 = 89%, which is within the recommended 90%.

Minimum Burst Pressure Sometimes it is not possible to obtain the conventional rupture disc construction that will burst at the required low pressures. For example, a 2 in. (50 mm) conventional stainless steel disc has a minimum bursting pressure of approximately 160 PSIG (1.1 MPa) (see Table 7.17s). If the corrosion resistance must equal that of stainless steel, but the set pressure must be lower, it is necessary to use a different disc. Some options include:

1. Select a reverse-buckling scored disc (Figure 7.17i), which can be set at less than 10 PSIG in the 2-in. size.
2. Specify some kind of laminated construction such as a Teflon-faced aluminum disc.
3. Utilize the sealed low-pressure design (shown on Figure 7.17k).
4. Specify a larger diameter stainless steel disc.

DISC HOLDERS AND ACCESSORIES

In order for rupture discs to perform as specified, most styles must be installed in special flange-like holders. Rupture disc holders can be manufactured from a wide variety of materials. Holders are also available in a variety of standard and nonstandard configurations to adapt to threaded, flanged, or welded pipe connections. Other specialized or custom connections can also be specified.

The most common type of holder is an insert type holder that fits inside the bolt hole circle of standard piping flanges (Figure 7.17t). In specifying rupture disc holders, it should be remembered that depending on the downstream conditions, the discharge side of the holder could be a lower-grade material, such as carbon or stainless steel, since it will not ordinarily be in contact with the process.

TABLE 7.17s

Minimum Rupture Pressures as a Function of Size, Based on 70°F (21°C) Operating Temperature and on Standard Disc Design***

Size Inch (mm)	*Aluminum*	*Aluminum Lead Lined*	*Copper*	*Copper Lead Lined*	*Silver*	*Platinum*	*Nickel*	*Monel*	*Inconel*	*316 Stainless*
1/4 (6.2)	310	405	500	650	485	500	950	1085	1550	1600
1/2 (12.5)	100	160	250	330	250	250	450	530	775	820
1(25)	55	84	120	175	125	140	230	265	410	435
1 1/2(38)	40	60	85	120	85	120	150	180	260	280
2(50)	33	44	50	65	50	65	95	105	150	160
3(75)	23	31	35	50	35	45	63	74	105	115
4(100)	15	21	28	40	28	35	51	58	82	90
6(150)	12	19	25	25	24	26	37	43	61	70
8(200)	9	17	35	35	27	—	30	34	48	55
10(250)	7	16	42	42	—	—	47	28	—	45
12(300)	6	10	55	55	—	—	—	360	—	45
16(400)	5	8	55	55	—	—	—	270	—	33
20(500)	3	8	70	70	—	—	—	215	—	27
24(600)	3	8	60	60	—	—	—	178	—	65
Maximum Recommended Temperature, °F (°C)	250 (121)	250 (121)	250 (121)	250 (121)	250 (121)	600 (315)	750 (399)	800 (427)	900 (482)	600 (315)

*In PSIG (14.5 PSIG = 1.0 barg).

**This data applies to forward acting prebulged discs only. Reverse acting disk designs are not limited by the values listed.

© 2003 by Béla Lipták

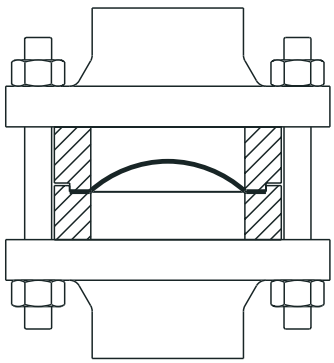

FIG. 7.17t
Insertable holder design fits between flange studs.

Accessories

Several accessories are available with rupture disc flanges that may be specified as required.

Studs and nuts are used to apply the necessary load to grip and seal the rupture disc. The studs will be longer than required for a standard bolted joint and is dependent on the height of the rupture disc assembly.

Jack screws are used to jack the rupture disc joint apart so that the disc can be replaced, and they should be considered on all installations of 2 in. (50 mm) and above.

Pressure taps are often specified in the outlet holder flange for a pressure switch or excess flow valve and pressure gauge installation as required in disc/valve combination or double disc applications.

Eyebolts are specified when size, weight, or location require lifting devices to aid in installation.

Burst indicators typically consist of some type of break-wire configuration. The circuit is a thin or fragile, normally closed conductive circuit that is broken due either to mechanical contact from the rupture disc or the initial pressure wave released from the opening disc. Other pressure, temperature, and flow sensing devices (see Figure 7.5d) are also used to detect disc leakage and/or rupture.

SIZING

Rupture discs may be sized in accordance with the following formulas:

For vapor:

$$d = \sqrt{\frac{W}{146\,P}}\ \sqrt[4]{\frac{T}{M_w}} \qquad \textbf{7.17(1)}$$

For steam, if dry and saturated:

$$d = 0.205\sqrt{\frac{W}{P}} \qquad \textbf{7.17(2)}$$

Superheated steam:

$$d = 0.205\sqrt{\frac{W(1 + 0.00065T_s)}{P}} \qquad \textbf{7.17(3)}$$

Wet steam:

$$d = 0.205\sqrt{\frac{W(1 - 0.012y)}{P}} \qquad \textbf{7.17(4)}$$

For liquids:

$$d = 0.236\sqrt{Q}\ \sqrt[4]{\frac{SG}{P_1}} \qquad \textbf{7.17(5)}$$

where:

d = minimum rupture disc diameter in.
M_w = molecular weight
P = relieving pressure (PSIA), including allowable accumulation (10% in normal conditions, 20% in fire conditions)
P_1 = relieving pressure (PSIG), including allowable accumulation
Q = relieving rate, gal/min
SG = liquid specific gravity where water = 1.0
T = relieving temperature, °R (460 + °F)
T_s = degrees of superheat, °F
W = relieving rate, lbm/hr
y = percent moisture (100 steam quality)

Note: Where rupture discs are installed upstream of a relief valve, the rupture disc should be the same size as or larger than the relief valve inlet nozzle.

Differences in Assumptions and Standards

Due to differences in the assumptions of the various design standards, it is recommended that one should use Equations 7.17(1) to 7.17(5) only if they match the equations in the applicable standard.

Flashing or reactive multiphase venting or high rate pressure transient methods are beyond the scope of this reference. However, the Design Institute for Emergency Relief Systems (DIERS, www.aiche.org/diers) is a good source of information for complex sizing cases, and API RP520 provides guidance for certain cases of flashing flows. The following will describe the three general methodologies employed in sizing rupture discs.

Coefficient of Discharge Method When this method is used, the coefficient of discharge (K_d) is applied to the theoretical capacity to arrive at the rated flow rate:

$$W_{rated} = K_d \cdot W_{theoretical} \qquad \textbf{7.17(6)}$$

© 2003 by Béla Lipták

The coefficient of discharge method should be used when sizing simple relief systems. A system is considered simple, if the following are true:

1. There are no more than 8 pipe diameters of piping upstream of the rupture disc device.
2. There are no more than 5 pipe diameters of piping downstream of the rupture disc device.
3. The rupture disc device is equal to or greater than the inlet and discharge piping.
4. The piping discharges to atmosphere.

When these criteria are met, the sizing calculations apply to the entire system of inlet piping, rupture disc device, and discharge piping. Note that for ASME and API calculations, the coefficient of discharge is 0.62. For the ISO standards, the coefficient depends on the shape of the vessel nozzle leading to the rupture disc.

Resistance Method The resistance to flow method is a relief system sizing method in which the rupture disc device is treated as any other piping component and is represented in the calculations as a resistance value or velocity head loss (K_R). The capacity of the system is a function of the sum of all of the resistance values of the piping and piping components (including the rupture disc device). Use this method to size the relief system when the rupture disc is not used in combination with a pressure relief valve and when the conditions of the coefficient of discharge method cannot be met. For ASME and API applications, the capacity of the system calculated using the resistance to flow method must be derated by a factor of 0.90 to account for inaccuracies in the method. Due to the complexity and iterative nature of the calculations, this method is best performed using computer programs. API RP520, API RP521, and Crane TP410 are good sources for additional information regarding this method.

Combination Capacity Method When a rupture disc is used at the inlet of a pressure relief valve, the valve is sized first and then the rupture disc is selected using the same nominal size as the inlet of the relief valve. The capacity of the disc/valve combination is the valve capacity times the combination capacity factor (CCF).

$$W_{combination} = W_{prv\ldots rated} \times \mathrm{CCF} \qquad \textbf{7.17(7)}$$

The default combination capacity factor is 0.90, but some disc/valve combinations have certified test values that are higher.

In some cases the rupture disc and inlet piping size will be increased one size larger than the inlet of the relief valve in order to minimize the inlet line losses between the pressure vessel and the valve. The K_R value of the rupture disc can be used in calculation of the inlet line losses to the pressure regulating valve. However, if both the K_R value and the CCF factor are relatively high, it is evidenced by some rupture discs that a rupture disc mounted directly upstream of the valve has little effect on inlet line pressure drop. This may be due to the rupture disc conditioning the flow into the valve nozzle, the opened rupture disc being outside a boundary layer, or some combination of both.

Bibliography

American Petroleum Institute, "Sizing, Selection, and Installation of Pressure-Relieving Devices in Refineries," Part I, 7th ed., API RP520, Washington, D.C., 2000.

American Petroleum Institute, "Guide for Pressure-Relieving and Depressuring Systems," 4th ed., API RP 521, Washington, D.C.

American Society of Mechanical Engineers, "ASME Boiler and Pressure Vessel Code," Section VIII, Div. 1, 2001 ed., 2002 addenda, Washington, D.C., 2001–2002, UG125–UG137.

Center for Chemical Process Safety of the American Institute of Chemical Engineers, *Pressure Relief and Effluent Handling Systems*, New York, 1998.

Crane Valve Company, "Flow of Fluids through Valves, Fittings, and Pipes," Technical Paper No. 410, Joliet, IL, 1988.

Ewan, B.C.R. and Moatamedi, M., "Design Considerations to Prevent Heat Exchanger Failure," Hydrocarbon Processing, 66, November 2000.

International Organization for Standardization, "Bursting Discs and Bursting Disc Devices," ISO 6718, 2nd ed., Geneva.

Miller, D., "Rupture disc sizing using the resistance to flow method," *Flow Control*, January 2002.

National Fire Protection Association, Inc, "Guide for Venting of Deflagrations," NFPA 68, Quincy, MA, 2002.

"Pressure-Relieving Devices," *Guide for Inspection of Refinery Equipment*, American Petroleum Institute, Washington, D.C., 1985, chap. XVI.

Puleo, P.A., "Relief Valve or Rupture Disc?," Fire Protection Manual for Hydrocarbon Processing Plants, Gulf Publishing, Houston, TX, latest edition.

"Rupture Discs," *Measurements and Control*, October 1993.

VDI (Verein Deutscher Ingenieure), VDI 3673, "Pressure Venting of Dust Explosions," Part 1, 1995 ed., VDI, Dusseldorf.

© 2003 by Béla Lipták

7.18 Soft Sensors

STEVEN BAIN (2003)

INTRODUCTION

Sensors, as we usually refer to them, are physical objects such as thermometers or pressure gauges. However, it is possible to make sensors that are based only on combinations of other information. To distinguish a physical sensor from a sensor based only on other information, they are called hard and soft sensors, respectively.

Flow from Level

A soft sensor is a sensor that exists only as a mathematical calculation, probably based on measurements from other sensors. These other measurements may come from on-line sensors in real time, or from off-line sources such as laboratory analyses. A simple example of a soft sensor is that of a tank filling with liquid. If the tank's changing level is known, it is practical to calculate the flow into the tank:

$$\text{Flow} = \text{Area} \cdot \frac{\text{Level Change}}{\text{Time}} \qquad \textbf{7.18(1)}$$

This calculation provides a flow measurement, although there is no flow meter; only a level detector exists. The flow meter is a soft sensor.

Mass Flow from Pressure and ΔP

The line distinguishing hard and soft sensors is not always clear. For example, a multivariable mass flow transmitter for orifice plate-based gas mass flow measurement includes three instruments: an absolute pressure element on the upstream side of the orifice, a differential pressure element across the orifice, and a temperature element sensing gas temperature. The instrument provides each of these three measurements individually, and combines them into a single mass flow measurement.

$$\text{Mass Flow} = C_d \cdot E \cdot Y_1 \cdot d^2 \cdot \sqrt{\Delta P \cdot \rho} \qquad \textbf{7.18(2)}$$

There is no doubt that the pressure and temperature instruments are real, or hard, but is the mass flow instrument hard or soft? It would probably be classified as hard because the instrument is dedicated specifically to making the mass flow measurement, but in fact the measurement itself exists only as a calculation that is based on other measurements. If we used three separate instruments to make the required three measurements, and calculated the mass flow in a computer, it would definitely be a soft sensor. However, since the calculation is done in a single purpose-specific package, the instrument is probably hard.

Hard and soft sensors are often difficult to distinguish. In practice most soft sensors depend on combining several process variables, which are measured and used for process monitoring and control in their own right, into another instrument that perhaps cannot exist any other way.

Flow from Pump Speed and Power

For example, the performance of an adjustable speed centrifugal pump can be described by two equations:

$$\text{Characteristic: } P = a_1 \cdot S^2 + a_2 \cdot S \cdot F + a_3 \cdot F^2 + a_4 \cdot \frac{F^3}{S} \cdots \qquad \textbf{7.18(3)}$$

$$\text{Power: } Pw = b_1 \cdot S^3 + b_2 \cdot S^2 \cdot F + b_3 \cdot S \cdot F^2 + b_4 \cdot F^3 \cdots \qquad \textbf{7.18(4)}$$

where

P = pressure
S = speed
F = flow
Pw = power

Adjustable frequency drives (AFDs), particularly those controlled via an instrument network, can provide an output power measurement. Speed can either be assumed to match the output frequency (probably accurate to 2.5%), or be calculated from the motor's slip (accuracy improved to about 1%; the AFD may include slip compensation or vector control).

As a result, flow can be calculated from the Power equation,* with known speed and power. Similarly, pressure can be

* If implementing these equations, note that the AFD's power measurement is AFD output power to the motor, whereas the Power equation is shaft power input to the pump, so the effect of motor efficiency should also be included.

© 2003 by Béla Lipták

calculated from the Characteristic equation, with known speed and flow. This is achieved without any extra instrumentation: The measurements needed to calculate flow and pressure come from the AFD, which is required for speed control. As a result, the pressure and flow sensors are said to be soft; they are soft sensors.

Conceptually, a soft sensor can exist anywhere; an off-line calculation done by hand is one example. However, this section is concerned mainly with soft sensors that are implemented in real time.

Most soft sensors are currently implemented using well-defined and understood equations such as the examples used above. Soft sensors can however be implemented through emerging technologies, such as fuzzy logic, neural networks, and artificial life, although this is beyond the scope of this section.

The Role of Networks

In the future, networked instruments may coordinate their results via the network and report combinations of results to the controller. The example of the mass flow sensor that is based on pressure, pressure differential, and temperature shows what is practical when the three instruments are in a common housing. However, instrument networks remove the requirement for a common housing: any instruments that can communicate with each other could also combine their results and report the combination to the controller.

A first source for soft sensor applications is calculations that are currently done by hand. If operators are calculating process parameters off-line, perhaps by hand or spreadsheet, these are ideal opportunities to introduce soft sensors.

Soft sensors often require considerable computation, so until recently their use was limited, but they are now becoming increasingly practical. This section assumes that the required computer capacity is available.

REASONS FOR USING SOFT SENSORS

Reasons for choosing to implement a soft sensor include:

1. Making measurements that currently cannot be made any other way. In many cases, a soft sensor is the only way to make a process measurement, and in these cases they find a natural application—this is the most common situation.
2. Replacing a failed instrument, perhaps with reduced accuracy, until the instrument is repaired. This replacement may be made automatically in real-time by the process controls based, for example, on a loss-of-signal detector.
3. Monitoring the condition of equipment by estimating its performance using a soft sensor calibrated to the equipment's nominal performance, and comparing the soft sensor result against a measured value.
4. Reducing costs by eliminating potentially redundant instruments.

A guiding principle is always to make the best practical use of the available equipment. If a fault renders an instrument unavailable, perhaps a soft sensor based on other available equipment can allow operations to continue, possibly at reduced performance. Or, if reduced performance is unacceptable, a soft sensor may guide a controlled process shut-down.

APPLICATION EXAMPLES

This section provides examples of soft sensors drawn from a variety of industries. The intention is only to illustrate the concept of soft sensors in more detail, not to limit opportunities in any way. The potential for soft sensors is limited mainly by our ability to describe the process in terms that allow us to make useful inferences based on other available information. These inferences may depend on straightforward calculations, as the examples shown in the Introduction do, or on more advanced techniques.

Detection of Instrument Failure

A differentiator can be used to detect some instrument failures. If a signal changes faster than the maximum possible rate of change of a process variable, this indicates a fault. A wire break causes an extremely high rate of change, but wire breaks are usually detected by loss of signal. Another example of an instrument fault that results in a high rate of change is a bubbler tube that gets blocked, perhaps by silting. A differentiator can detect the blockage by sensing a high rate of change. However, a rate of change fault always occurs when a loss of signal fault occurs. To distinguish them, the rate of change fault can be suppressed while a loss of signal fault is active.

Using Redundant Instruments to Advantage

Although few applications have redundant instruments (that is, multiple instruments making the same measurement), many have parallel process trains where conditions from one train to another are usually similar. An example is a water pumping station that has two wet wells, to allow one to be out of service for maintenance at times of low demand. However, the wet wells usually operate in parallel, connected by a common influent channel. In this situation, both wet wells have level instruments, and usually both level instruments are operational. This gives the opportunity to make extra use of the two measurements.

While both level measurements are available, the mean of their two measurements usually gives a more accurate level than either measurement individually.

If the difference between the two instruments is considerably more than the sum of their errors, perhaps twice as

© 2003 by Béla Lipták

much, for an extended period, this indicates that they need to be calibrated.

If the difference is still more, perhaps four times as much, this indicates that the mean is probably not reliable so another control signal is needed. If another level reference can be used, such as a level switch or operator's input, the logic can check the instruments against that and decide which instrument can be used to control and which needs to be serviced.

While a measurement is not available, for example, because of a rate of change fault, the logic can default to the other measurement.

Sensorless Flux Vector Control

For years, an AFD with an induction motor was more reliable than a DC drive and motor, but the DC combination provided better control. This changed with the advent of flux vector control of induction motors, but initially flux vector control required a motor sensor to resolve the vector. This solution was then superceded by sensorless flux vector control, in which the AFD infers the angle of the flux vector only from information that is already available to it: amps, volts, frequency, and phase. This sensorless flux vector sensing is a soft sensor. It is sensorless because it does not require a dedicated motor-mounted resolver; instead it has a soft sensor that provides the necessary measurement.

Viscosity Control in Rubber Blending

When manufacturing rubber for tires, the final hardness of the rubber is critical. However, the final hardness is determined during the blend process, at which time it is impractical to measure. The process traditionally depends on making a batch, measuring the final characteristics of the rubber in a laboratory, and then making future batches based on the same recipe. This procedure is satisfactory, but it does not compensate for variations in the feed ingredients and therefore can be improved.

Merikoski, et al.[1] report a real time soft sensor based on blend process measurements that provides an output that correlates well with laboratory measurements of final hardness made after the batch is finished. The sensor is based on measurements of blend temperature and pressure and mixer speed and torque. It is not intended as a substitute for recipe-based production, but allows manufacturers to compensate for small deviations.

DETERMINATION OF ERRORS

A soft sensor's measurement will probably be based on several other measurements, each of which will have an associated accuracy. Here a method is described for estimating the inaccuracy of a soft sensor, based on the inaccuracy of the other measurements, and the equation that describes the soft sensor. It also discusses other considerations that influence inaccuracy.

Combining Instrument Errors

The discussion below is based on the work of Zalkind and Shinskey[2] of the Foxboro Company, who extended the well-established theory for statistical handling of discrete measurement uncertainties into the continuous domain. They did so principally to quantify uncertainties introduced by combinations of analog computers, but their work applies equally to instruments used in combination as they are in soft sensors.

Assumptions:

1. The instruments are correctly calibrated (i.e., there are no systematic errors in their output signals).
2. The errors are normally distributed about the mean, and the mean accurately reflects the actual value.

Let the measurement signals be S_1, S_2,…S_n, their errors be E_1, E_2,…E_n, the soft sensor signal formed from the measurements be S, and its error be E. Then the error associated with those signals in combination is as follows:

Addition or Subtraction $S = k_1 \cdot S_1 + k_2 \cdot S_2$ or

$$S = k_1 \cdot S_1 - k_2 \cdot S_2$$

$$E = \sqrt{\frac{((E_1 \cdot k_1)^2 + (E_2 \cdot k_2)^2)}{2}} \qquad \textbf{7.18(5)}$$

Multiplication $S = k_1 \cdot S_1 \cdot S_2$

$$E = \sqrt{\frac{((E_2 \cdot k_1 \cdot S_1)^2 + (E_1 \cdot k_1 \cdot S_2)^2)}{2}} \qquad \textbf{7.18(6)}$$

Division $S = k_1 \cdot \frac{S_1}{S_2}$

$$E = \sqrt{\frac{\left(\left(E_1 \cdot \frac{k_1}{S_2}\right)^2 + \left(E_2 \cdot k_1 \cdot \frac{S_1}{S_2^2}\right)^2\right)}{2}} \qquad \textbf{7.18(7)}$$

General Expression for the Error Assume a soft sensor having output S with error E. The sensor is based on measurement signals S_1, S_2,…S_n having errors E_1, E_2,…E_n, where $S = f(S_1, S_2,…S_n)$. The soft sensor would be affected by a small change in one measurement S_i, such as would be caused by E_i. This effect is given by the small change multiplied by the slope of the function in the S_i dimension, evaluated at the point (S_1, S_2,…S_n). Hence, the effect of E_i on E is:

$$E = f(E_i) = E_i \cdot \frac{\partial f(S_1, S_2, \ldots S_n)}{\partial S_i} \qquad \textbf{7.18(8)}$$

© 2003 by Béla Lipták

If the errors are randomly distributed about the mean, as we have assumed, then individual contributions to the overall error are combined by the root of the sum of their squares. As a result, the complete expression describing the error E is:

$$E = \sqrt{\frac{\sum_{i=1}^{n}\left(E_i \cdot \frac{\partial S}{\partial S_i}\right)^2}{n}} \qquad \textbf{7.18(9)}$$

Example: Division

$$S = k_1 \cdot \frac{S_1}{S_2} \qquad \textbf{7.18(10)}$$

$$\frac{\partial S}{\partial S_1} = \frac{k_1}{S_2}, \qquad \frac{\partial S}{\partial S_2} = -k_1 \cdot \frac{S_1}{S_2^2} \qquad \textbf{7.18(11)}$$

Hence:
$$E = \sqrt{\frac{\left(E_1 \cdot \frac{k_1}{S_2}\right)^2 + \left(E_2 \cdot -k_1 \cdot \frac{S_1}{S_2^2}\right)^2}{2}} \qquad \textbf{7.18(12)}$$

Verification:

Zalkind and Shinsky report tests made on combinations of analog computers that verified the practical application of their mathematics.

Implementing the Error Calculation Bear in mind how the basis for the errors of the measurements involved in the calculations are quoted. For these calculations to be completely correct, the errors should be on the same basis. They should not only be in the percentage of actual reading (and not the percentage of full scale) basis, but they should all be given to the same number of standard deviations (2-sigma and 3-sigma are commonly quoted). A 2-sigma measurement will be within the quoted error limit for 95.5% of the time, and a 3-sigma measurement for 99.7%. If necessary, convert from one base to another by:

$$\text{Accuracy on new base} = (\text{Accuracy on old base}) \times \frac{\text{New base}}{\text{Old base}} \qquad \textbf{7.18(13)}$$

For example, 2-sigma 0.5% error expressed as a 3-sigma accuracy is:

$$3\text{-sigma accuracy} = 0.5 \cdot \frac{3}{2} = 0.75\% \qquad \textbf{7.18(14)}$$

The results provided here are all based on error. To apply these results rigorously, convert inaccuracy statements to errors. The error can then be used directly or converted back to whatever format is required.

Digital Calculation Errors Errors introduced by digital calculations are well-documented, and are beyond the scope of this handbook. However the following are recommended:

1. Avoid 12-bit computing, because although 12-bit accuracy (1 part in 4095) is better than what most process instruments deliver, 12-bit digital calculation errors quickly become significant.
2. When practical, use floating point calculations, probably based on measurements in engineering units. These are most convenient for users and allow considerable computation without introducing significant errors.

DIGITAL SIGNAL PROCESSING

Soft sensor calculations depend on routine arithmetic, such as addition, subtraction, multiplication, and division, and these are assumed to be available. Beyond these functions, soft sensors benefit from digital signal processing (DSP) techniques. DSP is a substantial topic in its own right, beyond the scope of this handbook, but the following DSP techniques are particularly applicable to process control and soft sensors:

1. Time delay
2. High- and low-pass filters
3. Integrators and differentiators
4. Interpolation filters

Filters are used to extract a specific part of an instrument's signal. Low-pass filters are most common, and are used to remove high-frequency interference, or noise, from a low-frequency signal. Integrators are familiar as totalizers, while a differentiator may be used, for example, to adapt a tank's level sensor to a flow measurement.

Spreadsheets allow DSP techniques to be tested easily, and graphs help to show and explain the functions' effects.

Time Delay

A time delay simply delays a signal a specific amount, by clocking the signal into a buffer periodically and clocking it out after an appropriate delay. A time delay may be useful to simulate a real process delay. For example, if a flow transmitter measures flow into the first of three tanks in series, and the requirement is to add reagents to the tanks in proportion to their influent flows, then it may be practical to estimate the flows into the second and third tanks by delaying the flow measurement by the appropriate transportation lag.

Delays are usually implemented in a rotating buffer of data registers in the controller, such as Registers 101 to 200. The buffer has a pointer that indicates the next register to clock out from and clock into. When it is time to clock a measurement through the delay, clock out from the register

© 2003 by Béla Lipták

indicated by the pointer, and then immediately overwrite that register with the current measurement and increment the pointer. When the pointer increments to 201, reset it to 101—this is what makes the buffer rotating. There are relatively few applications for a simple time delay, but rotating buffers are widely used.

Implementation Considerations Initialize the registers depending on the application. For example, if starting the controller onto a running process, the error may be reduced by preloading all the registers with the current measurement.

Adjust the duration of the delay by either clocking data through the buffer at a varying rate, or by varying the number of registers in the buffer, possibly by using two pointers, one for the start and another for the end.

Integrators and Low-Pass Filters

Integrators find special application in the well-known proportional/integral/derivative (PID) controller, but the PID integrator has the special characteristic that in a correctly-functioning controller, the value being integrated (the error) is equally likely to be positive or negative. As a result, a PID controller's integral term seldom moves far from zero, and their integrators usually run over indeterminate durations. However, general-purpose integrators typically run over specific intervals that are usually time-based, but may be based on other variables too.

Low-Pass Filters

A low-pass filter is normally used to smooth out spurious fluctuations in a signal. The chief disadvantage of a low-pass filter is that it also smoothes out sudden, real changes, which usually interferes with control responsiveness. It also delays, or phase-shifts, a signal (i.e., it has some properties that are similar to a time delay).

Better low-pass filters are based on the mean of the most recent measurements.* This requires a rotating buffer, as for a time delay, that stores the most recent measurements, and the calculation to determine their mean. The measurements may be weighted, in which case the calculation includes the required weighting factors. The low-pass filter's basic formula is:

$$y(n) = \frac{w_1 \cdot x(n) + w_2 \cdot x(n-1) + w_3 \cdot x(n-2) \cdots}{i} \qquad \textbf{7.18(15)}$$

where

$y(n)$ = current filter output
$x(n)$ = current measurement
$x(n-1)$ = previous measurement, etc.
w_1, w_2, etc. = weighting factors, which are often equal and average 1
i = number of measurements used in the filter

* Impulse response and associated detail are beyond the scope of this section.

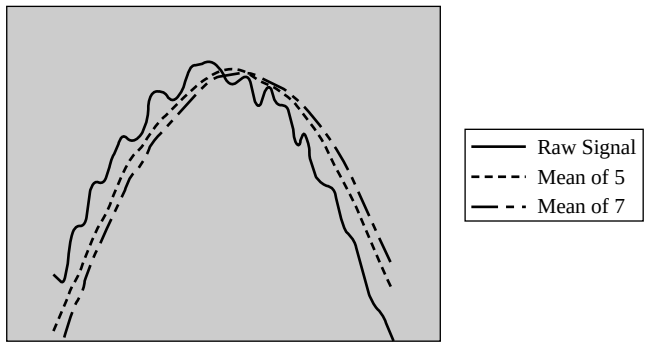

FIG. 7.18a
Low-pass filter I.

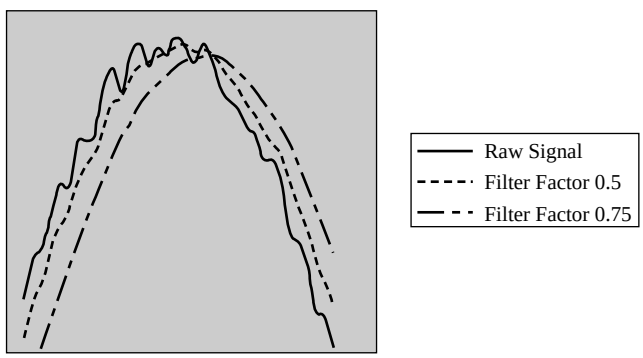

FIG. 7.18b
Low-pass filter II.

Figure 7.18a shows an example of low-pass filtering applied to a noisy signal. The raw signal is a portion of a sine wave (the actual signal) plus 5% random noise, and the two filtered signals are the mean of the most recent 5 or 7 signals. Filtering removes much of the noise, leaving a more accurate representation of the actual signal, but the filtered signal is somewhat delayed in time, or phase-shifted.

A simpler but useful filter that requires comparatively little computational overhead is:

$$y(n) = y(n-1) \cdot Ff + x(n) \cdot (1 - Ff) \qquad \textbf{7.18(16)}$$

where

Ff = filter factor; $0 < Ff < 1$

The effect of the filter increases as the filter factor increases.

Figure 7.18b shows an example of this simpler low-pass filter. It is less effective than the previous type, but is far easier to implement and uses fewer system resources.

Implementation Considerations Regulate when the filter calculations are performed; do not simply execute the filter each scan through the control logic. Ideally, take the measurement

© 2003 by Béla Lipták

at precise time intervals; this is probably coordinated in the analog input's hardware and delivered to the logic for processing a few milliseconds later. However, this functionality may not be available. In this case, use a timer to regulate logic execution. The timer may regulate fetching the current measurement, and when it is fetched, executing the filter logic. Also, if the available measurement can be considered current, the timer may regulate executing the filter logic directly.

The degree of filtering depends on both the parameters of the filter calculation (the filter factor in the example shown by Figure 7.18b), and the frequency of execution. If the logic is executed frequently, the filtering is less pronounced, but the result is smoother. As a result, it requires more computation to achieve a lot of filtering with a smooth result.

Initialize the filter appropriately, probably based on the first good measurement after a controller start or after an instrument is brought back into service, for example, after a loss-of-signal shutdown. This logic is similar to that needed to deal with sudden changes, and the functions may share a common routine.

Filter either in the control logic or in the hardware of the analog input. Many analog inputs include a digital filter implemented in the input's firmware. Considerations when choosing where to implement include:

1. *Input Filter*—The logic can be smaller and faster. Timing is likely to be most precise because communications delays are eliminated or greatly reduced. Often a group of inputs must share the same filter characteristics—this disadvantage can be reduced by grouping like signals together, but this may make the consequences of a hardware failure worse.
2. *Logic Filter*—This filter can be more customized and have more features, such as initialization alternatives and better ways of dealing with sudden signal changes that are significant.

Suppose one is using a filter based on the mean of the past measurements with equal weighting factors (as is quite common). Rather than summing all the measurements each time, it is more computationally efficient to use the previous sum, and to add the new measurement and subtract the measurement that is no longer included. For example, assuming a filter based on the mean of the past i measurements:

$$Y(n) = Y(n-1) + x(n) - x(n-i) \qquad \textbf{7.18(17)}$$

$$y(n) = \frac{Y(n)}{i} \qquad \textbf{7.18(18)}$$

This still requires a rotating buffer, but it replaces several add functions with one add and one subtract. However, it has the potential to accumulate error if the add and subtract functions are not exact. Periodically sum all the measurements to eliminate the accumulated error.

The consequences of a low-pass filter's time delay can be mitigated if the amplitude of the noise is comparatively small compared to the signal, which is usually the case. For example, if a signal changes suddenly by an amount considerably more than the noise amplitude, then this probably indicates an actual change, and it may be appropriate to override the filtered signal. Such a sudden change may be detected by a high-pass filter operating in parallel with the low-pass filter, and the override may take the form of overwriting buffer registers with the changed signal.

Integrators

Integrators are familiar to control engineers in the traditional PID controller. However, a PID integrator is a special case in that it integrates only over time, and the time duration is from initialization until shutdown (i.e., an indefinite period), whereas integration is usually over a definite period and may be with respect to any variable, not only time. Integrating over an indefinite period is essentially totalization, and requires only a single register to hold the total. Integrating over a definite period requires a rotating buffer, as for a time delay.

Integration usually is with respect to time, although in principle one can integrate with respect to any variable. The integrator's basic formula is:

$$y(n) = z \cdot x(n) + z \cdot x(n-1) + z \cdot x(n-2) \cdots z \cdot x(n-i) \qquad \textbf{7.18(19)}$$

or

$$y(n) = z \cdot (x(n) + x(n-1) + x(n-2) \cdots x(n-i)) \qquad \textbf{7.18(20)}$$

$y(n)$ = current filter output
$x(n)$ = current measurement
$x(n-1)$ = previous measurement, etc.
z is the change in the integration variable (probably time) per iteration
i is the number of measurements included in the integration interval

Example (see Table 7.18c):

Assume flow measurements are taken every second from a flow meter calibrated in gallons per minute, and the requirement is to continuously display the volume delivered during the past 10 s:

z = 1 s, which is 1/60th of a minute—the flow is in gallons per minute.
i = 10—there are 10 one second periods in the required 10 s interval.

© 2003 by Béla Lipták

TABLE 7.18c
Flow Application Example

Time (s)	*Flow (gal/min)*	*Z*	*Volume*
1	10		
2	12		
3	13		
4	11		
5	10		
6	8		
7	7		
8	6		
9	8		
10	7		
	$\Sigma = 92$	$\cdot\frac{1}{60} =$	1.53 gallons/second

Implementation Considerations The discussion of low-pass filter implementation considerations is an introduction to timing requirements, which are similar for integrators.

Some instruments, particularly flow meters, include internal totalizers. These are well suited to totalizing applications, but, as currently available, they may be less useful for flow integration. This because they report* whenever a predetermined volume has passed through the flow meter, rather than reporting the volume, for example, during a predetermined time period. However, totalizing in the instrument can provide the highest accuracy with the simplest controller logic, so this alternative is attractive. Most instruments can be configured to report small volumes (the smaller the volume, the less the timing error) at high rates, so this alternative can be workable.

Differentiators and High-Pass Filters Users of automatic controls are familiar with differentiator usage from the well-known PID controller.

$$\frac{y(n) = x(n) - x(n-1)}{z} \qquad \textbf{7.18(21)}$$

$y(n)$ = the current filter output
$x(n)$ = current measurement
$x(n-1)$ = previous measurement
z = change in variable the derivative is with respect to (probably time)

Figure 7.18d shows an example of high-pass filtering applied to a noisy signal.

* A report usually takes the form of a pulse. A flow meter may output a pulse whenever another, say, 100 liters has passed. The frequency of the pulses depends on the flow—the smaller the volume, the more frequent the pulses—and frequencies in the 1 kHz range are practical.

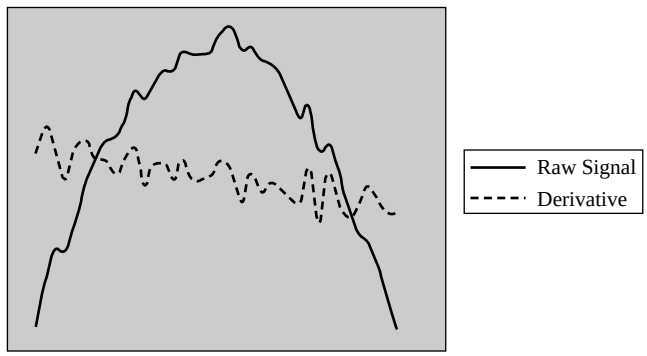

FIG. 7.18d
High-pass filter/differentiator.

Example:

Assume a pipe delivering flow into a cylindrical tank of area 2 m^2. The flow into the tank is metered, and the tank's level is metered. Estimate the flow out of the tank:

$$\text{Outflow} = \text{Inflow} - \text{Area} \cdot \frac{d(\text{Level})}{dt} \qquad \textbf{7.18(22)}$$

Time (s)	*Inflow (m^3/s)*	*Level (m)*	$\frac{dL}{dt}$ *(m/s)*	$Area \cdot \frac{dL}{dt}$ *(m^3/s)*	*Outflow (m^3/s)*
1	0.3	1.1			
2	0.4	1.2	0.1	0.2	0.2
3	0.4	1.3	0.1	0.2	0.2
4	0.3	1.3	0.0	0.0	0.3

Implementation Notes:

Do not form a high-pass filter from the raw signal minus its low-pass output, and do not form a low-pass filter from the raw signal minus the high-pass output. A high-pass output is usually highly random, so there may be little correlation between its output and the actual signal. The instantaneous difference between a raw signal and its low-pass output is usually significantly affected by the low-pass phase shift.

Interpolation and Predictive Filters

Interpolation filters provide maximally accurate ways of estimating what the actual value of a process variable was between samples. For example, assume samples $x(t)$, $x(t+1)$, $x(t+2)$, etc. are available. An interpolation filter provides the best estimate of x at any time, such as $t + 2.6$.

Interpolation technology is well developed for interpolating intermediate results and this may be useful in process control. A more exploratory possibility is to use similar technology to predict future process conditions—a predictive filter—as an advance warning function that may allow the

© 2003 by Béla Lipták

controls to anticipate and avert a process upset. For example, at time $t = 0$, assume available samples $x(0)$, $x(-1)$, $x(-2)$, etc. What is the best estimate of x at $t > 0$, for example $x(+2.6)$?

Predictive filters are not yet widely used and the technology is relatively less mature. As a result, this handbook only introduces the concept to highlight the possibility. See current texts for recent progress in this area.

References

1. Merikoski, S., Laurikkala, M., and Koivisto, H., "An Adaptive Neuro-Fuzzy Inference System as a Soft Sensor for Viscosity in Rubber Mixing Process," Neural Networks and Applications '01, Puerto de la Cruz, Spain, 2001.
2. Zalkind, C.S. and Shinskey, F.G., "Stastical Methods for Computing Over-All System Accuracy," *ISA Journal*, October 1963.

© 2003 by Béla Lipták

7.19 Tachometers and Angular Speed Detectors

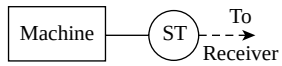

Flow Sheet Symbol

A. BRODGESELL (1969, 1982) **B. G. LIPTÁK** (1995, 2003)

Types:
A. Impulse tachometers
B. Optical encoders and photoelectric sensors
C. Stroboscopes
D. AC and DC tachometers
E. Induction sensors
F. Magnetic sensors
G. Pneumatic sensors

Note: Most angular position sensors described in Section 7.10 and proximity sensors described in Section 7.14 can also be configured as tachometers.

Range: Up to 999,990 rpm

Inaccuracy: Generally 0.01% of reading, or 1 rpm up to a reading of 100,000 rpm

Operating Temperature: Up to 200°F (93°C)

Costs: For angular position sensors see Section 7.10; for proximity switches see Section 7.14. Hand-held mechanical tachometers cost about $150. Microprocessor-based handheld contact or noncontact type tachometers cost about $250. Handheld stroboscopes with internal batteries cost $500 with analog displays and $750 with digital displays. For panel-mounted installations, a microprocessor-based programmable display costs about $600; the associated sensor can be optical ($150), proximity, or magnetic ($150). If an analog transmitted signal is desired, a magnetic wheel sensor and signal conditioner can be obtained for $700.

Partial list of Suppliers:
Airpax Corp. (www.airpax.net)
AMETEK (www.ametekpi.com)
Allen-Bradley Co. (www.ab.com)
API Controls (www.apicontrols.com)
BEI Industrial Encoder Div. (www.beiied.com)
Bentley Nevada Corp. (www.bentley.com)
Cole-Parmer Instr. Co. (www.coleparmer.com)
Electromatic Equipment Co.
Electro-Sensors Inc. (www.electrosensors.com)
Hyde Park Electronics (www.hpsensors.com)
Invensys (www.speed-position.invensys.com)
Kollmorgen Corp. (www.kollmorgen.com)
Megatron Electronics (www.megatron.co.il)
Meriam Instruments (www.meriam.com)
Micro Motion Inc. (www.micromotion.com)
Milltronics Inc. (www.milltronics.com)
Monarch Instrument (www.monarchinstrument.com)
Newport Electronics Inc. (www.newportinc.com)
Omron Electronics Inc. (www.omron.com/oie)
Precilec SA (www.willburger.de)
Red Lion Controls (www.redlion-controls.com)

© 2003 by Béla Lipták

Rockwell Automation (www.rockwell.com)
Ronan Engineering Co. (www.ronan.com)
Siemens VDO (www.vdo.com)
Yokogawa Corp. of America (www.yca.com)

INTRODUCTION

The measurement of linear velocity and speed of rotation (tachometry) is discussed in this section. One common method of tachometry is to detect the speed of rotation by a proximity switch and utilize a counter to register the number of rotations. Since proximity switches have already been discussed in Section 7.14, this approach will not be discussed here. The measurement of linear and angular position has been discussed in Section 7.10. For that reason, such indirect methods of speed measurement, which are based on the timed measurements of positions, are also not covered.

Speed-sensing devices are available in a wide variety of designs, using capacitor impulse, optical (visible, infrared, laser), stroboscopic, electromagnetic induction, voltage generation, and magnetic force measurement techniques. They can be packaged as handheld portable units or as permanently installed industrial transmitters and they can serve as tachometers, rate meters, counters, or totalizers.

HANDHELD TACHOMETERS

These units are available in contacting and noncontacting designs, can measure linear or rotary motion, are battery-operated, and are provided with microprocessors for memory functions and convenient range switching. The modes and ranges available for a particular multifunction design are given in Table 7.19a. The unit is provided with a kit containing linear measuring wheels, adapters for direct contact rpm sensing, and reflective tape for optical measurement. In the noncontacting (optical) mode, the maximum measuring distance varies from 12 to 30 in. (300 to 762 mm). The inaccuracy of measurement is 0.2% in the linear mode and 0.025% in the angular velocity mode.

TABLE 7.19a
*Measurement Modes and Ranges of a Multirange Tachometer**

Mode	*Ranges*
Optical	0.1000–1666.0 rev/sec; 6.0000–99,999 rev/min; 360.00–99,000 rev/hr
Contact	0.1000–333.00 rev/sec; 6.0000–20,000 rev/min; 360.00–99,000 rev/hr
Linear	0.0110–18.300 yd/sec; 0.6600–1100.0 yd/min; 40.000–66,000 yd/hr
	0.0330–55.000 ft/sec; 2.0000–3300 ft/min; 120.00–99,000 ft/hr
	0.4000–660.00 in./sec; 24.000–39500 in./min; 1420.0–99,999 in./hr
	1.0000–1665.0 cm/sec
	0.6000–1000.0 meters/min; 36,000–60,000 meters/hr
	0.0250–37.500 miles/hr

*Courtesy of Cole-Parmer Instrument Co.

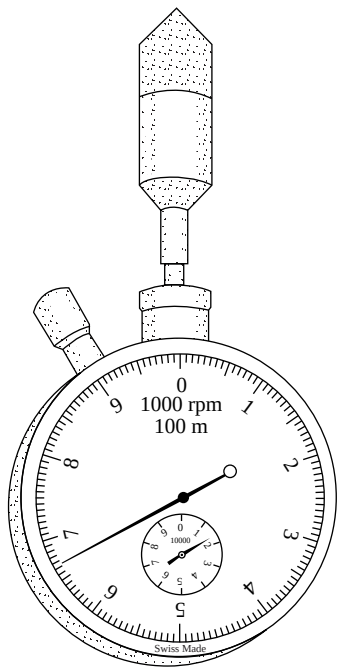

FIG. 7.19b
Mechanical hand-held tachometer.

The simplest and least expensive tachometer is the handheld mechanical unit illustrated in Figure 7.19b.

TACHOMETER OPERATING PRINCIPLES

The same basic operating principles are used in both the handheld and the permanently installed transmitting tachometers. These principles are discussed in the following paragraphs.

Impulse Tachometers

In this device a spindle is used to make physical contact with the rotating object so that the spindle will rotate at the same rpm as the shaft being measured. The spindle operates a reversing switch in the pickup head, which reverses twice during each revolution. The reversing switch connects the charging potential to a capacitor in each direction, and with each impulse a current is passed through a milliammeter readout. The readout registers the average of the rates of the pulses, which corresponds to the rates of spindle rotations. The sensor head and the readout display can be separated by a distance

© 2003 by Béla Lipták

TABLE 7.19c
*Ranges and Inaccuracies of Microprocessor-Based Digital Contact Tachometers**

R: Revolutions	*Single Range*	*Accuracy*
RPM (rev/min)	0.1–999.9	±0.1
	900–25000	±1
RPS (rev/sec)	0.001–9.999	±0.001
	9.00–416.66	±0.01
RPH (rev/hr)	6–99996	±6
Y: Yards	*Single Range*	*Accuracy*
YPM (yards/min)	0.1–999.9	±0.1
	900–8333	±1
YPS (yards/sec)	0.001–9.999	±0.001
	9.00–138.88	±0.01
YPH (yards/hr)	2–99998	±2
m: Meters	*Single Range*	*Inaccuracy*
mPM (meters/min)	0.1–999.9	±0.1
	900–7620	±1
cm/S (centimeters/sec)	0.1–999.9	±0.1
	900–12700	±1
mPH (meters/hr)	1–99999	±1
F: Feet	*Single Range*	*Accuracy*
FPM (feet/min)	0.1–999.9	±0.1
	900–25000	±1
FPS (feet/sec)	0.001–9.999	±0.001
	9.00–416.66	±0.01
FPH (feet/hr)	6–99996	±6
I: Inches	*Single Range*	*Inaccuracy*
IPM (inches/min)	1.0–99996	±1
IPS (inches/sec)	0.1–999.9	±0.1
	900–5000	±1
I_3PH (in. × 10^3/hr)	0.1–999.9	±0.1
	900–18000	±1
M: Miles	*Single Range*	*Accuracy*
MPH (miles/hr)	0.001–9.999	±0.001
	9.99–284.09	±0.01

*Courtesy of Electromatic Equipment Co.

of 1000 ft (300 m) when the wiring is properly shielded. For ranges and inaccuracies refer to Table 7.19c.

Optical Encoders

In rotary encoders, the shaft turns a disk that has a radial pattern with a unique code provided for each of a finite number of distinct positions (Figure 7.19d).

For each bit or resolution there is one track of code pattern. For example, for 12 bits of resolution there are 12 tracks. The number of distinct positions is determined as 2^N; for example, for 12 bits/tracks there are 4096 distinct positions, which results in a resolution of better than 0.025%. On the back of the disk there are light-emitting diodes for each track, allowing phototransistors to read the disk pattern. The disk track patterns are usually not in natural binary code, but in gray code (see Figure 7.10n for details).

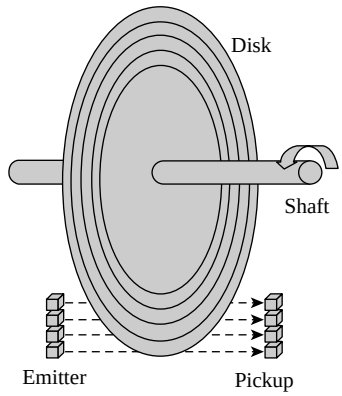

FIG. 7.19d
The principle of encoder operation.

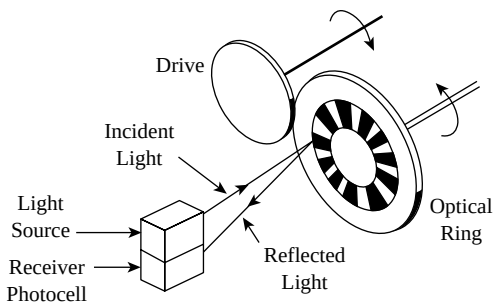

FIG. 7.19e
Photoelectric speed sensor.

Photoelectric Sensors

In this design, a light beam is modulated by a rotating member, and the modulations produce current pulses in the output of a photocell. In the design shown in Figure 7.19e, dark and light areas on the rotating disk alternately absorb and reflect the light of the source beam. The variations in reflected light are sensed by a photocell, which produces current pulses whose frequency is in proportion to the speed of rotation. Alternately, the light source and photocell can be located on opposite sides of a rotating, perforated disk.

Noncontacting Optical Tachometers Microprocessor-based optical tachometers operate from a distance of up to 30 in. (0.76 m) from the target at angles up to 45 degrees. They are often used by marking the rotating object with a reflective substance, such as a tape, and registering the light pulse every time the tape passes in the view of the sensor. Because of the microprocessor, the impulses from the optical encoder can be converted into counts or velocity units as needed. Available ranges and inaccuracies are given in Table 7.19f.

© 2003 by Béla Lipták

TABLE 7.19f
*Ranges, Resolutions, and Inaccuracies of Digital Optical Tachometers**

Range	Resolution	Inaccuracy
5.0000–9.9999 rpm	0.0001 rpm	± 0.01 rpm
10.000–99.999 rpm	0.001 rpm	± 0.01 rpm
100.00–999.99 rpm	0.01 rpm	± 0.01 rpm
1000.0–9999.9 rpm	0.1 rpm	± 0.1 rpm
10,0000–99,999 rpm	1 rpm	± 1 rpm
100,000–500,000 rpm	10 rpm	± 10 rpm

*Courtesy of Cole-Parmer Instrument Co.

Stroboscopic Tachometers

When rewinding a tape at high rpm under a 60 Hz incandescent lamp, the patterns on the reel tend to slow and then appear to stop. This is the stroboscopic effect, discovered by Stampfer and Plateau in 1832 and named from the Greek word for whirling watcher. The stroboscope permits intermittent observation of rotating objects in such a way as to produce an illusion of stopped motion. Intermittency of observation can be obtained by intermittent illumination of the rotating object.

In industrial applications, the stroboscope is a light source that is turned on and off very rapidly. With the use of microprocessors and harmonic techniques, speeds up to 1 million rpm can be measured. These handheld or permanently installed units can measure the rotary, reciprocating, or linear rate of moving objects without the need for using reflective tapes or discs. The inaccuracy of measurement is usually 1 rpm.

Fiber-Optic Stroboscopes The short duration, high intensity light pulses produced by the stroboscope can be focused onto a port, which is configured for the mounting of one end of a fiber optic bundle. The other end of this optical fiber projects the light to the detected object. Various fiber optic bundles, nose pieces, and adapters are available to interface the fiber cable with the stroboscope enclosure. The optical, electrical, and environmental specifications for three such units are given in Table 7.19g.

AC Tachometers

The AC tachometer generator is an electromechanical device very similar to a two-phase induction motor. It consists of a primary winding, a secondary winding placed at 90 degrees (mechanically) to the primary, and a rotor. This arrangement is shown schematically in Figure 7.19h. With the rotor stationary and the primary winding excited by a sinusoidal voltage, the induced voltage in the secondary is almost zero due to the relative position of the two windings. However, as the rotor begins to turn, a sinusoidal voltage is induced in the secondary winding whose magnitude is in proportion to the rotor speed.

Since the output signal is a voltage, the readout instrument used with this tachometer should have a high input resistance to give near-zero current flow in the secondary winding. Any current flow in the output winding will cause a voltage drop, which will be subtracted from the true measured voltage, and thus the speed measurement will be in error.

DC Tachometer

In the DC tachometer generator, the magnetic flux is provided by a permanent magnet, and the output winding is located on the rotor. At zero speed there is no relative motion between magnetic field and winding, and the output voltage is zero. As rotor speed increases, so does the relative speed between magnetic field and winding, and hence the output voltage. The voltage induced in the winding is sinusoidal; a commutator and brushes on the rotor convert the AC voltage in the winding to a DC output in the same manner as in the DC generator. The DC tachometer is shown schematically in Figure 7.19i.

Induction Sensors

Several configurations are possible with induction-type sensors. Basically, the unit consists of a coil located in a magnetic field. This magnetic field is made to vary as a function of speed. One design, shown schematically in Figure 7.19j, uses a coil wound on a permanent magnet and located in the proximity of a rotating toothed wheel of magnetic material. As the teeth of the wheel pass the magnet, they disturb the magnetic field, which, in turn, induces voltage pulses in the coil. The pulse frequency is related to rotational speed as expressed by the relationship rpm = 60 f/N, where rpm is rotational speed in revolutions per minute, f is the frequency in Hertz (cps), and N is the number of teeth on the wheel.

Figure 7.19k shows a design in which the magnet is mounted in the rotating member, inducing voltage pulses in the stationary coil.

Magnetic Sensors

Magnetic-type sensors (Figure 7.19l) utilize magnets to accomplish speed detection, as implied by the name. The sensor consists of a multipole magnet mounted on the rotating member and a stationary magnetic reed switch mounted in the proximity of the magnet. Passage of the magnet poles causes the contacts of the reed switch to open and close, thus making and breaking an electrical circuit. The output is thus a pulse train whose frequency is in proportion to the rotation speed.

Magnetic speed sensors rely on magnets as either the sensing element or the sensed target to determine rotational or linear velocity. They are often used as gear tooth speed sensors or are incorporated into stroboscopes or tachometers.

Inductive Sensors In this detector, an oscillator circuit generated a radio frequency electromagnetic field that radiates

© 2003 by Béla Lipták

TABLE 7.19g
*Optical, Electrical, and Environmental Specifications of Three Stroboscopes Available with Fiber-Optic Cables**

Optical Specifications			
Model numbers	MVS-2027	MVS-2067	MVS-2200
Spectral bandwidth	350 to 1100 + nm	350 to 1100 + nm	300 to 1100 + nm
Photometric output[a] (1)	6 lumen-s	3 lumen-s	1.2 lumen-s
Radiometric light output[a]	50 mJ	25 mJ	10 mJ
Flash rate per second	20 max	60 max	200 max
Input energy per flash[b]	2.16 J	0.72 J	0.18 J
Light output pulse duration[c]	20 μs	12 μs	5 μs
Flashlamp life	$>10^8$ flashes maintaining >70% light output		
Fiber bundle diameter	0.2 to 0.5 in. (5 to 13 mm)		
Electrical Specifications			
Line input voltage[d]	115/230 Vac ±10%, 50/60 Hz (factory set at 115 Vac)		
Input current	1.2 A rms max		
Intensity control input[e]	2 to 6 VDC (Vref:Vlamp = 1:100)		
Trigger Input			
Trigger	5-V pulse into 4N36 opto-isolator with 150- nominal series resistor		
Pulse duration[a]	10 to 100 μs		
Environmental Specifications			
Operating temperature	−10 to +104°F (−23 to +43°C)		
Shock and vibration	1.5 G, 5 to 200 Hz/MIL-STD-810C		

[a]Measured through a 0.5 in. (13 mm) aperture at light output port.
[b]Energy at 600 Vdc (E = 1/2CV2). Discharge capacitor values are: MVS-2020 (12 μfd), MVS-2060 – (4 μfd), MVS-2200 (1 μfd).
[c]Approximate values at peak.
[d]Specify 230 Vac operation if desired.
[e]Intensity may be changed by adjusting voltage on discharge capacitor from 200 to 600 Vdc.
[f]Delay between flash command and light output is in microseconds.
*Courtesy of Monarch Instrument.

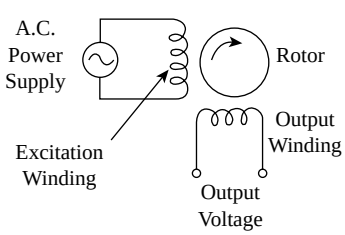

FIG. 7.19h
AC tachometer schematic.

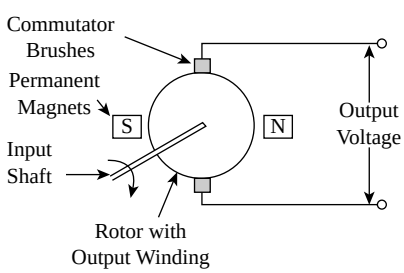

FIG. 7.19i
DC tachometer schematic.

from a ferrite core and coil assembly. The field is directed at the sensor face. When a metal target enters the field, eddy currents are induced into the surfaces of the target. This causes a reduction in the amplitude of the oscillator circuit (change in inductance).

Hall Effect Sensor A current is passed through a semiconductor material. When a magnetic field is applied perpendicularly to the surface of the semiconductor, a voltage develops. This Hall voltage is proportional to the applied field intensity.

© 2003 by Béla Lipták

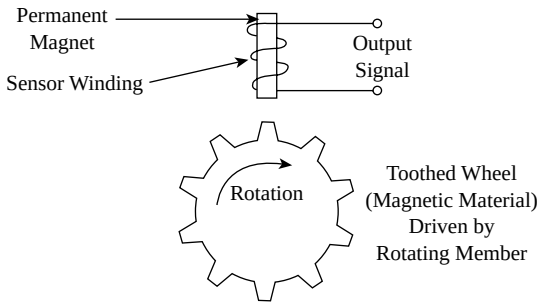

FIG. 7.19j
Schematic of an induction-type speed sensor.

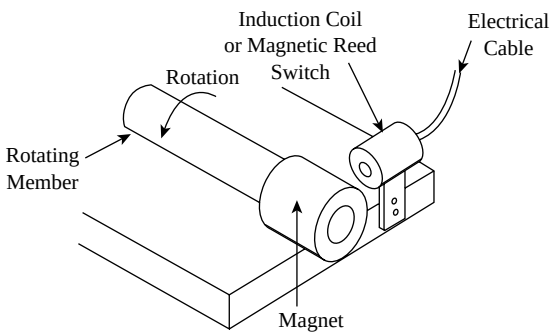

FIG. 7.19k
Mounting arrangement for magnetic or inductive velocity sensor.

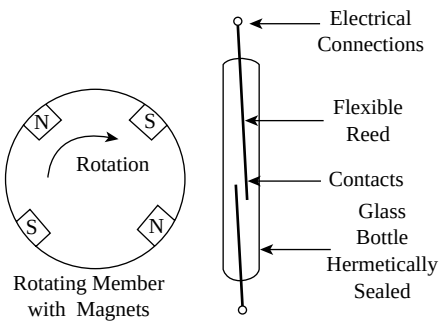

FIG. 7.19l
Schematic of magnetic speed sensor.

Magnetoresistive and Variable Reluctance Sensors In magnetoresistive sensors, the resistance of a sensing element varies with the direction and proximity of a magnetic field.

Variable reluctance sensors are self-generating, meaning that they require no external power. In these sensors, a small voltage is induced when a magnetic surface passes them in close proximity.

Pneumatic Speed Transmitter

An eight-pole permanent magnet is mounted on the input shaft as shown in Figure 7.19m. Flexure strips hold the disk between the base plate and the magnet poles. As the input shaft rotates, magnetic lines of force cutting through the disk

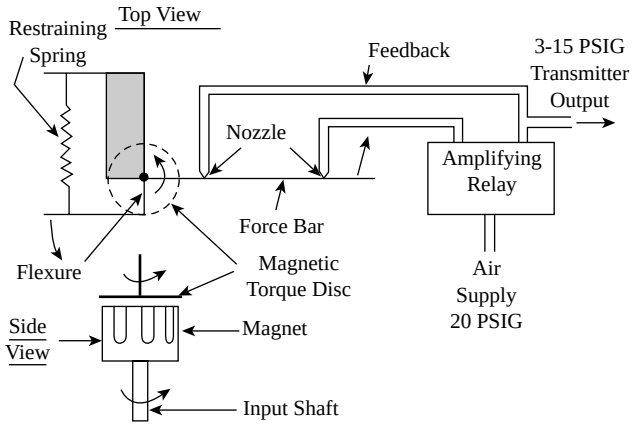

FIG. 7.19m
Pneumatic speed transmitter.

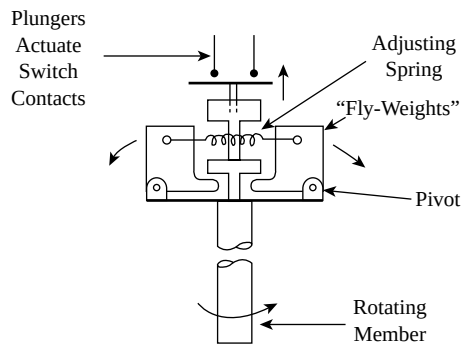

FIG. 7.19n
Speed switch.

tend to rotate it. The force bar is subjected to two forces: (1) the force resulting from the rotation of the magnet, and (2) the opposing force from the feedback unit. Imbalance of these forces results in motion of the force bar so that the air pressure at the nozzle changes.

The pneumatic relay amplifies the nozzle pressure and produces a restoring force through the feedback unit until torque due to magnet rotation and restoring force of the feedback unit are balanced. Since the torque due to rotation of the magnet is in proportion to the speed of the magnet, feedback pressure is in proportion to speed. However, the feedback pressure is also the transmitter output signal, and hence the output pressure is in proportion to speed.

SPEED SWITCHES

Sensors with a continuous output can be provided with relays actuated by the measuring circuitry to provide a contact closure signal for an alarm or shutdown function. Where only a contact closure is required—to signal over-speed, low speed, or zero speed—devices with on-off output action may be sufficient.

One type of switch shown in Figure 7.19n consists of flyweights mounted on a rotating shaft coupled to the machine

© 2003 by Béla Lipták

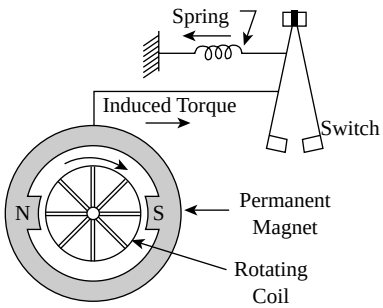

FIG. 7.19o
Zero speed switch.

to be monitored. Under the influence of centrifugal force, these flyweights move away from the center of the shaft against the restraining force of a spring. Toes on the flyweights lift a plunger, which tips a microswitch at the desired speed. The set point can be adjusted by changing the spring tension.

However, the switch is nonindicating, and set point changes must be made on a bench at known speed or the speed of the machine must be measured independently. These switches can be provided with actuation on increasing or decreasing speed. A manual reset feature is available, which keeps the switch in the actuated position, regardless of machine speed, until it is manually reset.

A switch to monitor zero speed is shown in Figure 7.19o. Relative motion between the coil and magnet produces a torque that holds the switch contacts in the operating position. As speed decreases, the electromagnetic torque decreases, until the spring force is sufficient to overcome the torque and the switch contacts transfer. This switch will actuate only on decreasing speed.

CONCLUSIONS

Selection of the type of sensor to be used will generally be governed by the purpose of measurement. Naturally, if an analog signal is required, the tachometer generators whose output is already analog have an advantage. For digital control and readout, magnetic, inductive, and photoelectric sensors offer compatible outputs.

For best accuracy, full-scale speed of tachometer generators should be so selected that the normal operating speed is as close as possible to full scale. Where the inherent speed range of the sensor is insufficient to accommodate the operating speed, reducing the gears on the sensor input can extend the measurement range.

Bibliography

Dyer, S.A., *Survey of Instrumentation and Measurement*, New York: John Wiley & Sons, 2001.

"Italy Encoders and Sensors 2001," London: Snapshots International Ltd., 2001.

Kaufman, A.B., "Velocity and Acceleration Transducers," *Instruments and Control Systems*, April 1971.

Morris, H.M., "Controlling a Web on the Fly," *Control Engineering*, July 1982.

Morris, H.M., "Rotary Tachometers Dominate the Velocity Sensing Market," *Control Engineering*, December 1978.

Morris, H.M., "The Many Roads to Measuring Speed are Increasingly Digital," *Control Engineering*, March 1980.

Perrine, R.C., *Design Handbook for Motors and Tachometers*, Magna, OH: Magna Physics Publishing, 2000.

"Tachometers, Counters," *Measurements and Control*, April 1993.

Uram, R., "Hardware and Software Team Up to Control Steam Turbine Speed," *Control Engineering*, February 1976.

© 2003 by Béla Lipták

7.20 Thickness and Dimension Measurement

T. A. MAYER (1982) **B. G. LIPTÁK** (1995, 2003)

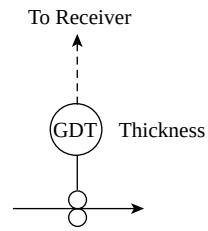

Flow Sheet Symbol

Types:

A. Capacitance
B. Inductive, magnetostrictive, and Hall-effect
C. Linear variable differential transformer
D. Mechanical micrometers
E. Laser
F. Pneumatic
G. Ultrasonic
H. Radiation (Beta or x-ray)
I. Optical Micrometer
J. Thin-Film Deposition and Coating Interferometer

Ranges:

A. 0.1 to 1.0 in. (3 to 25 mm)
B. 0.1 to 2 in. (2 to 50 mm)
C. From 0.001 in. (0.025 mm) up
D. Up to 1 in. (25 mm)
E. Wide, can be 0.1 to 8 mm
F. Microinches to inches
G. 0.01 to 10 in. (0.25 to 250 mm)
H. From 0.00025 in. (0.0064 mm) in plastics to 2 in. (51 mm) in steel
I. 10 to 200 μm
J. 15 nm to 50 μm

Inaccuracy:

Generally ±1% of measured value
D. 0.0005 in. (0.01 mm) and resolution 0.00005 in. (0.001 mm)
E. 0.001 in. (0.0025 mm) with laser gauging and 20 millionths of an inch (one millionth of a millimeter) with laser interferometers
G. ±1% of measured thickness
H. ±1% of basic weight measured or ±0.25% of thickness measured
I. 0.25 μm
J. 1% of reading

Costs:

A contacting linear gauge with digital readout costs about $500; a gauge stand can cost from $300 to $1000; a linear gauge with digital-analog output costs about $2000; most noncontacting thickness or dimension gauges cost from $2000 to $5000 for most designs. The cost of radiation-type installations can be higher, and laser triangulation sensors can exceed $10,000

Partial List of Suppliers:

ADE Corp. (A, G) (www.ade.com)
Balluff (B) (www.balluff.com)
Contrologic (E) (www.contrologic.co.th)
Delaran (www.delaran.com)
Dolan-Jenner Inc. (E) (www.horrigan-motion./dolan.htm)
Eaton Corp. (G) (www.eaton.com)
Electro Corp. (G) (www.electrosensors.com)
Electro Physic (www.electrophysic.de)
Endress+Hauser (H) (www.systems.endress.com)
Filmetrics (J) (www.filmetrics.com)

© 2003 by Béla Lipták

Haenni AG. (www.haenni-instr.com)
Hewlett-Packard (E) (www.thenew.hp.com)
Honeywell Inc. (G) (www.honeywell.com/sensing)
Ifell Laser & Sistemi (E) (www.ifell.it)
Kay-Ray/Sensall Inc. (H) (www.measure.org)
Lion Precision Inc. (A) (www.lionprecision.com)
Massa Products (G) (www.massa.com)
MicroSwitch/Honeywell (G) (www.content.honeywell/sensing)
Mission Peak Optics (www.semiconductoronline.com)
MTI Instruments (A) (www.mtiinstruments.com)
Ohmart Corp. (H) (www.ohmartvega.com)
Omron Electronics Inc. (G) (www.omron.com/oei)
Ono Sokki Technology Inc. (A, D, F) (www.onosokki.net)
Optodyne (E) (www.optodyne.com)
Pepperl + Fuchs Inc. (G) (www.am.pepperl-fuchs.com)
Ronan Engineering Co. (H) (www.ronan.com)
Schaevitz (C) (www.schaevitz.com)
Smar (B) (www.smar.com)
Virginia Technologies Inc. (I) (www.vatechnologies.com)

INTRODUCTION

The techniques used for the measurement of dimensions and thicknesses are similar to those that were discussed in connection with position and proximity sensors in Sections 7.10 and 7.14. For that reason the reader is advised to also review these sections, as some of the details of sensor features and operation will not be repeated here.

DIMENSION MEASUREMENT

The National Institutes of Standards and Technology uses a laser interferometer to obtain precision better than one part in 10 million. The PC-based optical micrometer for micromachine (OMMS) provides a thickness evaluation of diaphragms measuring 25 micrometers to 5 mm.

Thin-film deposition thickness is detected by interferometry to measure the reflective properties of a layer of coating to an accuracy of 1%. Ultrasonic devices also measure coating thickness by sending a pulse, which is reflected by the surface below the coating. This section provides information of the above and a variety of other thickness gauges.

Automated Gauging Machines

In automated dimensional inspection systems, the workpiece is mounted on a table and a probe is moved along the x, y, and z axes. First the probe is positioned in a reference hole or against a reference surface, and then it is moved (manually) to the various check locations. When gauging a bore or checking a single dimension against some specification after the part has been machined, pneumatic gauges can also be used, such as the units that were described in connection with Figure 7.14h. The use of air jets can be convenient because the measurement is not affected by ambient conditions such as temperature or by vibration.

Electronic gauging systems (laser, optical micrometer, linear variable differential transformer [LVDT], induction, reluctance, capacitance, resistance) are also widely used (Figures 7.14a to 7.14d) and are well suited for difference measurements, such as mating the inside diameter of a cylinder with the outside diameter of a piston.

Laser gauging has been available since 1970. In one configuration, the laser beam is directed at a rotating (or oscillating) mirror to collimate it into a flat ribbon of light. As the collimated beam scans across an object, the light is blocked by it and the light detector (such as photodiodes) on the other side measures the length of time during which the light was blocked. Therefore, the scan time across the shadow is used as a measurement of dimension. Laser scanners can operate from distances of 6 ft (1.8 m) and at 1 ms frequency, and, therefore, can scan several hundred objects per second.

THICKNESS GAUGING

The thickness gauge designs can be grouped into contacting and noncontacting designs and can use operating principles based on interferometry; induction; capacitance; reluctance; resistance; pneumatic; optical (including laser and optical micrometry); and ultrasonic, x-ray, or beta-ray radiation.

The thickness of web, film, foil, and sheet materials is monitored and controlled during manufacturing by the use of thickness measuring devices. The devices may be those that compare the thickness to a reference length, or those that indicate the thickness based on some physical relationship. (Compare specific vs. nonspecific measurements.)

The former devices are generally considered contacting types, while the latter are typically noncontacting types. The final reading is an averaged indication due to either mechanical or electronic damping of spurious signals. The cost of a specific instrument depends on its sensitivity, which determines

© 2003 by Béla Lipták

TABLE 7.20a
Thickness Measurements

Instrument	*Type**	*Sensitivity***	*Application****
Micrometer caliper	C	0.0001 in.	Sampling, quality control, calibration, foils, web, sheet, film materials (N)
Interferometry gauge	NC	1% of reading	Measures thin-film deposition layer thickness and uniformity of semiconductors and dielectric layers (Y)
Optical micrometer	NC	0.1 μm	Provides thickness monitoring for silicone wafers (Y)
Laser gauge	NC	0.05 in.	Mounted directly on production line and is used to alarm on any out-of-tolerance condition (Y)
Differential roller gauge	C	20 μin.	Low-speed continuous foils, web, sheet, film materials, calibration, sampling (Y)
Sonic and ultrasonic gauges	C	0.01 in.	Rigid, relatively thick sheets, or pipe walls accessible from one side only (Y)
Capacitance gauge	NC	0.001 in.	Insulating sheets, films (Y)
Radiation gauge	NC	50 mg/cm^2****	Metal foils and plastic films (Y)

*C = contacting; NC = noncontacting.
**1 in. = 25.4 mm; 1 μin. = 2.54×10^{-5} mm.
***Whether a device is suitable for continuous process instrumentation is indicated by N (no) or Y (yes).
****Actual sensitivity depends on the specified value for a given instrument divided by its density (g/cm^3).

the complexity of the device. Table 7.20a lists some of the more widely used thickness gauges.

Contacting Gauges

The familiar micrometer or vernier caliper gauges are only suitable for noncontinuous sampling or batch quality control and calibration measurements. This is because the contact points would wear out and the accuracy would be reduced with continuous use.

The differential dial gauge adapts the calipers to continuous measurement by using rolling contact points and indicating the difference between a reference wheel, usually on a calender roll, and the measuring wheel on the sheet stock. The thickness signal is derived from the output of an LVDT (Figure 7.20b). The difference between the secondary voltages caused by displacement of the movable iron core (armature) is linearly proportional to the displacement.

With the proper power source and input mechanism, dimensional gauging from 0.001 in. to several inches (0.0254 mm to several centimeters) is possible. The accuracy is independent of the finish of the calender roll. A single roller dial gauge contacting the stock would rely on the accuracy of the backing roll for overall accuracy.

Ultrasonic Thickness Gauging These sensors are listed under the contacting type gauges because they require a continuous sonic path between the part being measured and the transducer. Sound cannot travel through an air–liquid or air–solid interface; a continuous liquid coupling is required. This can be provided through different techniques, including the total immersion of both the measured part and the transducer in liquid.

These gauges are extensively used for wall thickness measurement of metal, plastic, or ceramic equipment. As sound travels at characteristic velocity and is reflected at acoustic boundaries, the measurement of the time it takes for an echo to return can be used as a measurement of thickness. This method of measurement is called the pulse-echo or transit-time method.

The other configuration of the ultrasonic thickness gauge is called the resonance gauge. In this design, a frequency-modulated continuous wave signal is generated, and when the measured wall thickness equals one-half wavelength (or multiples of it), mechanical resonance (standing wave conditions) occur. These gauges can measure wall thickness to within 1% error.

Sonic gauges are used to measure the thickness of materials accessible from one side only (i.e., the wall of a pressure vessel or a storage tank). The wall is made to resonate by

© 2003 by Béla Lipták

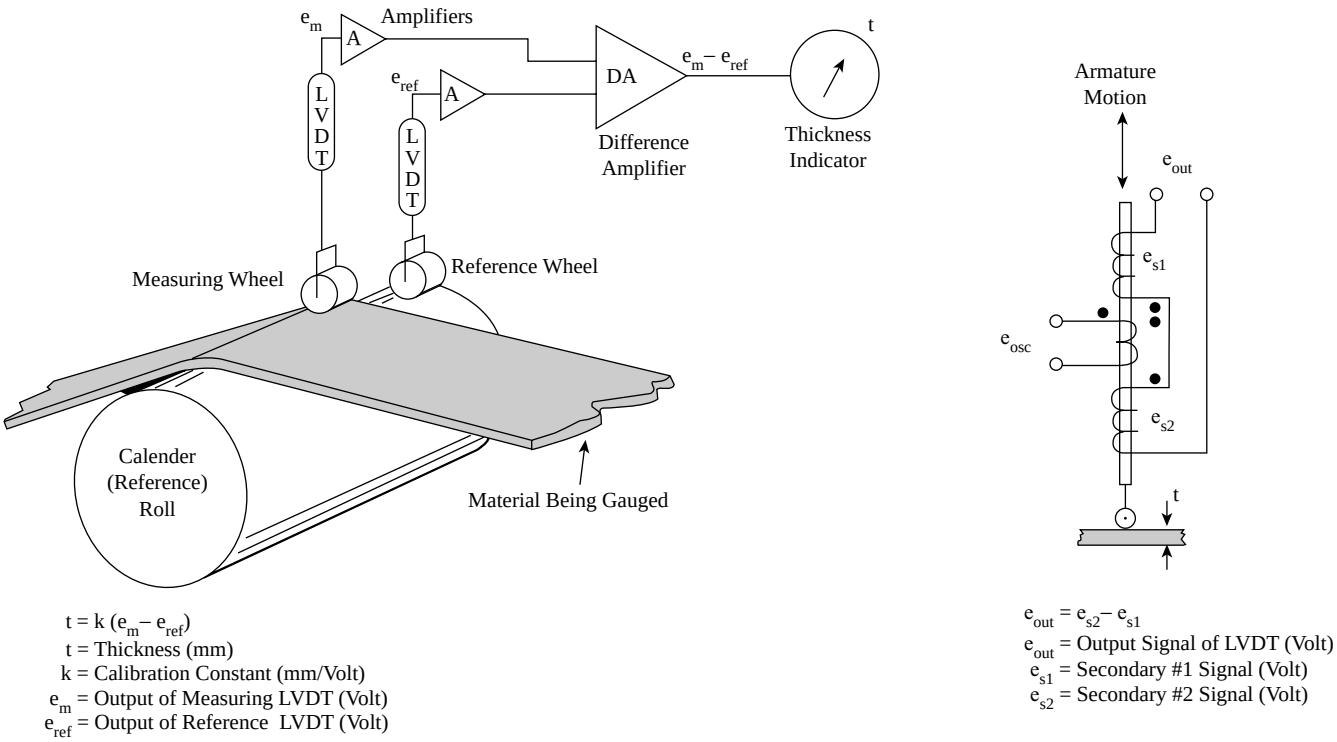

FIG. 7.20b
Left, differential roller gauge with LVDT; right, LVDT schematic.

varying the applied ultrasonic frequency. The resonant frequency is then used to calculate the thickness from the relation.

$$t = 0.5\ v/f \qquad \textbf{7.20(1)}$$

where

t = thickness of the material being gauged (ft) or (m)
v = velocity of sound in material (ft/sec) or (m/sec)
f = frequency of resonance (Hz)

The device is generally not suitable for dynamic reading of moving material because accurate dimensioning requires intimate contact between the generator crystal and the surface of the material.

Under static conditions, thickness from 0.01 to >10 in. (0.254 to >254 mm) may be measured with very great accuracy. When the ultrasonic probe is placed on a coated surface, it sends sound pulses that penetrate the coating through the base material. These pulses are reflected by the different surfaces and transmitted to the transducer in the probe. Based on the time intervals, the microprocessor gives individual and total coating thickness (Table 7.20c).

Noncontacting Gauges

Certain properties of materials may be used to indirectly indicate the thickness of films or sheets of those materials.

Capacitance Gauges For insulating films, the capacitance gauge may be used (Figure 7.20d). Because the capacitance

TABLE 7.20c
Features of an Ultrasonic Thickness Gauge by ElectroPhysik

Display type	4-digit LCD
Resolution	0.1 mm
Measuring range	1.2 to 225 mm (in steel with standard probe)
Lower limit on steel pipes	3 mm wall thickness × 20 mm diameter
Minimum curvature	10 mm
Tolerance	±0.1 mm
Sound velocity range	1,000 to 9,999 m/s
Surface temperature	–15 to 1500°C
Frequency	5 MHz
Update rate	4 Hz
Power supply	1.5 V AA alkaline cells (2 pcs)
Dimensions	126 × 68 × 23 mm

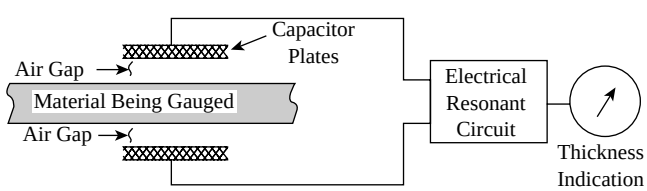

FIG. 7.20d
Exaggerated sketch of the capacitance gauge.

© 2003 by Béla Lipták

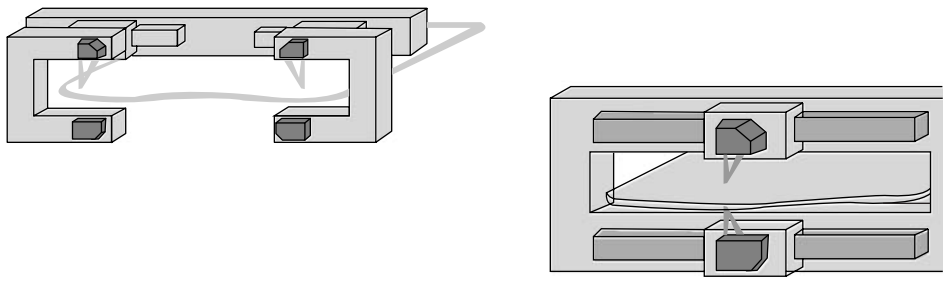

FIG. 7.20e
Laser type thickness gauge manufactured by IFELL.

varies directly in relation to the thickness of the dielectric material between the capacitor plates, it is possible to measure thickness of insulating films if the dielectric constants are a great deal different from that of air.

The capacitor and the material to be measured are part of an electrical resonant circuit, whose output is calibrated to indicate thickness. Moisture content of the material and/or air gap between the plates and the material are the primary sources of error for this instrument. (The principle is applied to moisture measurement.) It also is not usable for conductive films.

Laser Gauging In their industrial applications, laser interferometers are providing precisions of about 20 millionths of an inch (one millionth of a millimeter). These instruments operate by directing two light beams from the same source to the detected surface over two paths that differ in length by as little as 0.1 wavelength. As these light beams are recombined, destructive interference occurs, and the interference patterns (dark and bright lines) can be interpreted into precise distance measurements.

The laser techniques described for dimensional measurements can also be used for the detection of thickness. Figure 7.20e illustrates the method for using laser triangulation for the measurement of the thickness of sheets. Whenever an out-of-tolerance condition occurs, an alarm is actuated. The measurement resolution is 0.002 mm and the sampling rate is 1000/s. These types of direct measurements tend to eliminate errors caused by belt fluctuation, vibration, or thermal expansion.

Optical Micrometer and Interferometers The OMMS is used for thickness monitoring of silicon wafers. Representative specifications for the unit are given in Table 7.20f. These units measure diaphragm thickness from 10 μm up to 5 mm. The operating principle is based on the optical absorption of the double-sided silicon wafer. Silicon wafers of known thickness are used for calibration prior to shipment. The OMMS can also self-calibrate on-site, using built-in thickness standards.

Interferometry can also be used to measure the reflective properties of a layer as it changes in thickness. This sensor can measure deposition rates, layer thickness, uniformity of semiconductors, and dielectric layers. The instrument is outside the process chamber and can make adjustments to the process recipe before the actual deposition run, in addition to monitoring the deposition process and reevaluating the multilayer structure after the deposition. The inaccuracy of the instrument is about 1% of reading. The spectrometer range is 400 to 1000 nm, the static layer can be from 15 nm to 50 μm, and the growing layer is over 100 nm.

TABLE 7.20f
Representative Specifications for Thickness Sensing by Optical Micrometer for Micromachine (OMMS) Method Produced by Virginia Technologies Inc.

Measurement technique	Nondestructive optical transmission through sample
Measurement array	CCD
Data points	106,000 (pixels)
Computer	High-end PC
Software	LabView custom application
Viewing mode	Backlit surface image
Sample material	Double sided polished silicon
Wafer size	Up to 8 in.
Sample preparation	None
Thickness measurement resolution	0.1 μm
Thickness measurement range	10–200 μm
Spatial resolution	30 μm
Thickness measurement area	5.0 mm × 5.0 mm
Thickness measurement time	5 s/site
Thickness measurement repeatability	14–55 μm: ±0.5 μm 56–101 μm: ±0.5 μm 102–144 μm: ±0.5 μm 145–181 μm: ±1.0 μm
Calibrated operating temperature range	22–27°C
Temperature sensor resolution	0.1°C
Temperature sensor repeatability	±0.3°C
X-Y stage position repeatability	<50 μm
X-Y stage position resolution	200 μm

Radiation Type Thickness Gauges Both beta and x-ray forms of radiation are used in thickness gauging. The beta-radioisotope

© 2003 by Béla Lipták

is used to measure the thickness of sheets or the thickness of coatings on sheets. The measurements are usually calibrated in weight per unit area, such as ounces per square foot, and can be detected within an error of 1%.

X-ray thickness gauges are a standard part of computer-controlled rolling mills. They can also be used for hot or cold, stationary or moving strips of paper, plastic, glass, rubber, or metal, over a wide range of thickness. When the strip is moving at a high speed, the speed of response of the x-ray gauge will determine the precision at which defects can be isolated. If a mill operates at a speed of 5000 ft/min (1524 m/min), a gauge with a 50 ms response time will allow reaction to a change in thickness after some 4 ft (1.3 m) of material has passed the sensor.

The attenuation of radiation from x-rays or radioactive decay by matter is utilized in the radiation absorption gauge to measure the thickness of the material. The equation is

$$\Delta I = [1 - \exp(-\mu t)] \qquad \textbf{7.20(2)}$$

using averaged ionization current for signal, where

ΔI = change in ionization current when absorber is inserted
I_o = ionization current without absorber
μ = absorption coefficient ($cm^2/\mu g$)
t = thickness ($\mu g/cm^2$)

The display is calibrated to indicate thickness.

Radiation gauges are subject to errors from the statistical nature of radioactive decay and from the dependence of the absorption coefficient on the composition of the material being measured (Figure 7.20g).

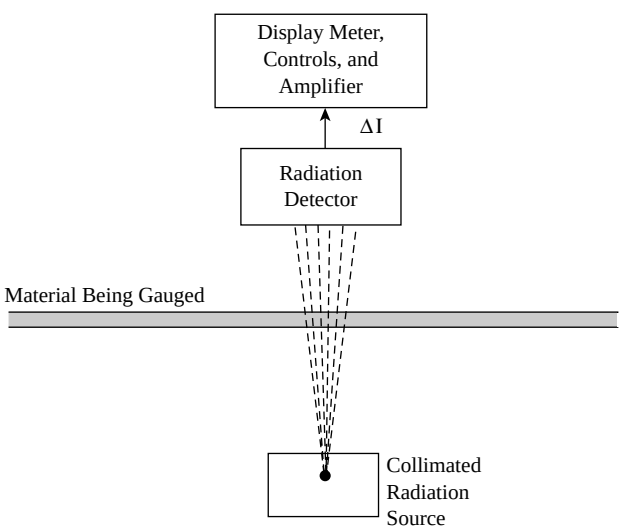

FIG. 7.20g
Radiation absorption gauge.

For all thickness gauges, but particularly for the nonspecific or noncontacting types, frequent calibration checks with samples of the material to be gauged are recommended. Specific or contacting-type gauges are usually calibrated against precision standards.

Coating Thickness Detection by Radiation The thickness of coatings can be measured in one of three ways. One technique is to use two beta gauges. One measures the basis weight of the substrate prior to coating, and the other detects the total basis weight after coating; the difference reflects the thickness of the applied coating. This method of measurement is suitable for the measurement of thick coatings, where the coating represents 25% or more of the weight of the substrate.

Another method of detecting the thickness of coatings on paper or plastics uses the preferential absorption principle. This method is applicable only to coatings having an atomic number, which is at least twice the atomic number of the substrate. Here only a single, low-energy gamma source is used, and the detector measures the absorption by the ingredient with the highest atomic number (the coating).

When the coating thickness of metal strips is to be detected, a nuclear fluorescence sensor can be used. In this type of detector, the gamma radiation excites the electrons in the metal under the coating. As the electrons return to their original (unexcited) state, they release a low-energy form of radiation (fluorescence). Two ion chambers are used in this instrument; one detects the radiation from the metal strip, and the other measures all forms of the back-scattered radiation. The difference between the two readings is a function of the thickness of the coating.

Bibliography

Baumeister, T., Ed., *Mark's Standard Handbook for Mechanical Engineers*, 10th ed., New York: McGraw-Hill, 1996.

Christiansen, D., Ed., *Electronics Engineers' Handbook*, 4th ed., New York: McGraw-Hill, 1996.

Fauque, J., "Air Gaging," *Measurements and Control*, April 1991.

Hewlett-Packard Company, *Accoustics Handbook*, Application Note 100, Palo Alto, CA, latest edition.

Julita, J.M., "New Dimensions in Optical Gaging," *InTech*, June 1980.

Kloeppel, J., "Liquid Film Thickness Measurement," University of Illinois, Urbana-Champaign, 2000.

Plog, H., "*Guide to Methods and Instruments for Coating Thickness Measurement*," Cambridge, MA: Draper Laboratory, 2001.

Poppe, F.W., "Photoelectric Sensing," *Measurements and Control*, October 1991.

Swientek, R.J., "On-line Thickness Control Improves Product Quality," *Food Processing*, August 1986.

Ultrasonic Thickness Measurement, London: Witherby & Co., 1999.

Thickness Testing, London: Portcullis Press, 2000.

Wohlstein, S., "Laser Gaging," *Measurements and Control*, June 1991.

Young, R.D., "Eight Techniques for the Optical Measurement of Surface Roughness," NBSIR 73–219, National Bureau of Standards, May 1973.

© 2003 by Béla Lipták

7.21 Torque and Force Transducers

A. BRODGESELL (1969, 1982) **B. G. LIPTÁK** (1995)
P. M. B. SILVA GIRÃO (2003)

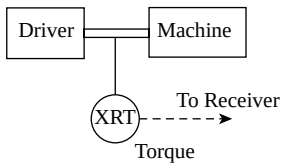

Flow Sheet Symbol

Operating Temperature: –60 to 300°F (–50 to 150°C)

Force Ranges: Hand-held or portable force gauges can have ranges from 0–1 to 0–500,000 lb (0–0.5 to 0–220,000 kg). Load cells are available with ranges from 1 to 10 million lb (0.5 to 5 million kg).

Torque and RPM Ranges: Torsion bar type indicators up to 50 lb-in. (60 kg-cm); stationary and rotary strain gauge type torque sensors up to 400,000 lb-in. (500,000 kg-cm) or, in terms of power transfer, up to 75,000 HP. The maximum speed of slip-ring designs varies from 2500 to 6000 rpm, while for inductively coupled torque sensors, it can reach 15,000 rpm. Reaction torque sensor ranges go up to 1.5 million lb-in. (1.7 million kg-cm).

Force Inaccuracy: Handheld or portable test gauge errors range from 0.2 to 0.5% of full scale. Load cell errors can be as low as 0.02% of full scale.

Torque Inaccuracy: Torsion bar monitors, 3% of full scale; stationary and rotary strain gauge sensor nonrepeatability, nonlinearity, and hysteresis amount to 0.1% of full scale each.

Costs: *Test equipment:* Hand-held or portable mechanical force gauges, $500 to $750; electronic digital torque gauges, $1000; and electronic digital force gauges, $500 to $2000. Motorized test stands for manual operation range from $1000 to $3000, while programmable, computer-compatible units cost about $7500.

Force sensors: Single beam load cells range from $50 to $500. The unit cost of standard load cells ranges from $500 to $1000; a panel-mounted transducer/monitor costs about $1000. A single-component quartz force sensor is about $2000, while a digital dynamometer controller costs $5000 to $7000.

Torque sensors: Cost of stationary torque sensors for ranges from 100 to 10,000 lb-in. (115 to 11,500 kg-cm) is $1500 to $2000. Rotary sensors for the same range are $2500 to $4000. The cost of a slip-ring assembly is $2000. Reaction torque sensor costs for the above range are between $1000 and $2500. For higher ranges, costs are as follows: up to 100,000 lb-in., $5000; to 200,000 lb-in., $8000; to 500,000 lb-in., $15,000; to 1.5 million lb-in., $18,000.

Partial List of Suppliers:
AMETEK (www.ametek.com)
Binsfeld Engineering Inc. (www.binsfeld.com)
BLH Electronics Inc. (www.blh.com)
Cooper Instruments & Instruments (www.cooperinstruments.com)
Daytronic Corp. (www.daytronic.com)
Dillon Quantrol (www.quantrol.com)
Eaton Corp. (www.web.eaton.com)
GSE Inc. (www.gse-inc.com)
HBM Inc. (www.hbm.com)
Honeywell (www.ssec.honeywell.com)
S. Himmelstein & Co. (www.himmelstein.com)
H IC Sensors (www.msiusa.com/icsensors.htm)

© 2003 by Béla Lipták

Hottinger Baldwin Measurements Inc. (www.htm.com)
Interface Force (www.interfaceforce.com)
JR3 Inc. (www.jr3.com)
Kahn Instruments Inc. (www.kahn.com)
Kistler Instrument Corp. (www.kistler.com)
Lebow Products Inc. (www.lebow.com)
Magtrol Inc. (www.magtrol.com)
Mark-10 Corporation (www.mark-10.com)
Morehouse Instrument Co., Inc. (www.morehouseinst.com)
Muse Measurement Corp. (www.thomasregister.com/olc/muse/)
Schlenker Enterprises Ltd. (www.schlenkent.com)
SMD Sensors (www.smdsensors.com/)
Sensor Developments Inc. (www.sendev.com)
Sensotec (www.sensotec.com)
Sentran (www.sentranllc.com)
Tensitron (www.tensitron.com)
Transducer Techniques (www.transducertechniques.com)
Vibrac Corp. (www.vibrac.com)

(For a force or torque transducer that better suits a specific application, please refer to the search capabilities available at some Web sites [e.g., www.globalspec.com/SpecSearch/SearchForm?Comp = 62].)

FORCE MEASUREMENT

Force is a quantity whose measurement is important in fields so different as the petrochemical industry, medicine, robotics, automotive industry, civil construction, and electrical machines. The measurement of force overlaps somewhat with the detection of strain, displacement, load, pressure, and acceleration covered in other sections of this Handbook. For this reason, the reader is advised to also review those sections in order to gain a complete view of the range of devices available for the measurement of force.

Force (F) is a vector quantity that causes a change of momentum in a body of mass m ($F = ma$). If a force applied to a body does not alter its acceleration, then the force and the body constitute a system in equilibrium. Forces that do not change in time are said to be static and are usually due to some potential energy (e.g., weight) forces that change in time, such as those due to shock waves, are said to be dynamic.

Measurement Principles

There are several principles used to sense and measure force. These principles include the following:

1. Balance the unknown force with a known one, such as a standard mass and a system of levers or an electrical force.
2. Measure the acceleration that the unknown force produces on a known mass.
3. Measure the pressure it produces on a known surface.
4. Sense and measure the effects that the unknown force produces on various materials.

These can include mechanical effects, such as strain of a body or displacement of a body or of a spring (e.g., vertical and torsional balances). They can also be optical, such as causing a change of the optical properties of optical fibers (e.g., fiber Bragg gratings[1]). They can also be electrical, including (1) resistive, (2) capacitive, (3) magnetostrictive, and (4) piezoelectric.

In the resistive designs, the change of resistance occurs in force-sensitive polymer resistors. It can also occur due to the change of distance between particles and due to change of contact area between particles of semiconductor materials. In the capacitive designs, when the force is applied it produces a change in the distance between its plates and hence a change of capacitor's value. In magnetostrictive designs the force produces a stress that changes the permeability of a magnetic material with a force produced stress. In the piezoelectric design, the mechanical stress changes the voltage produced between the surfaces of a dielectric. From all the sensing methods, the most often used in industrial applications are the mechanical and the piezoelectric ones.

Mechanical Dynamometers: Load Cells

Most of the transducers used in force measuring instruments (dynamometers) are mechanical of the piezoelectric type above. Their operation is based on the deformation that the force produces on an elastic supported body. Force measurement in this case is converted into a measurement of strain (uniaxial tension or compression or shear) or into the displacement experienced by the elastic body. Mechanical force transducers composed of a supported elastic body and of a strain/displacement sensor are usually called load cells because the force is a load to the body. Nevertheless, the designation

© 2003 by Béla Lipták

load cell is commonly extended to other force sensors, such as those based on the change of oil pressure (hydraulic load cell) or air pressure (pneumatic load cell), when the force is applied to an elastic surface of a closed chamber.

In industrial applications, the primary interest focuses on the measurement of force by electrical means. Therefore, the change in displacement (gross deflection) or strain (local deflection) of the elastic body is converted into an electrical signal by the displacement or strain sensors. The sensing element, which must operate within the particular material's elastic region, is selected for the particular application, and the following parameters are decisive on its choice:

1. Size
2. Shape
3. Modulus of elasticity of the material
4. Sensitivity to local strain and gross deflection
5. Dynamic response and loading effect on the measured system.

For the same type of sensing body, the change of its geometry and material allows different force measuring ranges.

Sensing Elements In terms of type and shape, the basic sensing bodies (elements) belong to one of the four following categories:

1. Beam
2. Proving ring
3. Column
4. Diaphragm

Figure 7.21a shows some examples of such sensing elements.

In the cantilever beam configuration, the maximum deformation is obtained at the free end of the beam, regardless of where the force is applied. For low force ranges up to some tens of Newtons (1 Newton = 0.2248 lb_f), the displacement of that end is converted into an electrical signal using a linear variable differential transformer (LVDT). For higher ranges, strain on the beam is measured using strain gauges, usually four identical gauges, two on the upper surface (operating in tension) and two on the lower surface (compression) of the beam at a distance X from the free end.

An electrical voltage U_0, which is proportional to the force F, is obtained connecting the strain gauges as a Wheatstone bridge. If the power supply to the bridge is E, one obtains:

$$U_0 = \frac{6GXE}{Ybh} F \qquad \textbf{7.21(1)}$$

where G = the strain gauge factor, Y = the Young's modulus of beam's material, and b and h = the width and the height of beam's cross section, respectively.

With both simply supported beams and restrained beams, force should be applied in the middle of the beam, as shown in Figure 7.21a. For the simply supported beam, maximum deformation and maximum strain both occur at that middle point of the beam; for the restrained beam, the maximum deformation occurs at that same point, but maximum strain is at beam's ends. As it happens with the cantilever beam, both strain and displacement can be converted into electrical signals using strain gauges and LVDTs.

Proving rings can be standard and flat as shown in Figure 7.21a. In both cases the maximum deformation and strain occur at the point where the force is applied. In the standard ring, and for practical reasons, strain is detected through strain gauges placed at 90 degrees to the force. At those points strain is almost equal to the maximum and sensibility is only slightly reduced. If four strain gauges are used and mounted in a Wheatstone bridge configuration with a supply E, the bridge's output voltage is:

$$U_0 = \frac{1.092GrE}{Ybt^2} F \qquad \textbf{7.21(2)}$$

where G = the strain gauge factor, Y = Young's modulus of the ring material, r = the radius of the ring, and b and t = the ring's width and thickness, respectively.

Column type sensing elements are particularly suited for the measurement of high force ranges, such as 20,000 N and higher. The column material and ratio of L and h (see Figure 7.21a) determines the characteristics of the column. Usually, strain is detected by strain gauges placed at the point of maximum strain in the middle of the column: two detect the compression along force's line of action, and two detect traction in the direction perpendicular to the force. The sensitivity of the element can be increased with the introduction of a stress concentration hole as shown on the bottom right in Figure 7.21a.

Diaphragm elements (Figure 5.5b) are also force detectors and are used intensively as pressure sensors. They are circular plates of different types continuously fastened around their edges. The applied force causes a strain in the diaphragm, which can be used to translate force into an electrical signal. Diaphragms made of conductive materials can also work well as a capacitance type displacement sensor.

All the sensing elements in the various force transducers should only be subjected to pure compression or tension stresses. Therefore, care must be taken not to produce torsional forces or shear stresses.

Strain Gauges Most load cells use strain gauges to translate the detected force into an electrical signal. The oldest strain gauge design is the foil-type strain gauge, which have been widely used in 4- to 20-mA transmitters. The foil elements are available with unit resistances from 120, 350, 1000, to 5000 Ω. The thin foil (0.0001 in., or 0.0025 mm in thickness) is bonded to the sensing element surface by an epoxy adhesive.

Semiconductor strain gauges are also used in a bonded configuration. In comparison to the bonded foil gauge, the main advantage of the semiconductor gauge is their greater sensitivity (higher unit resistance), while their main disadvantage is their increased sensitivity to temperature. An improvement

© 2003 by Béla Lipták

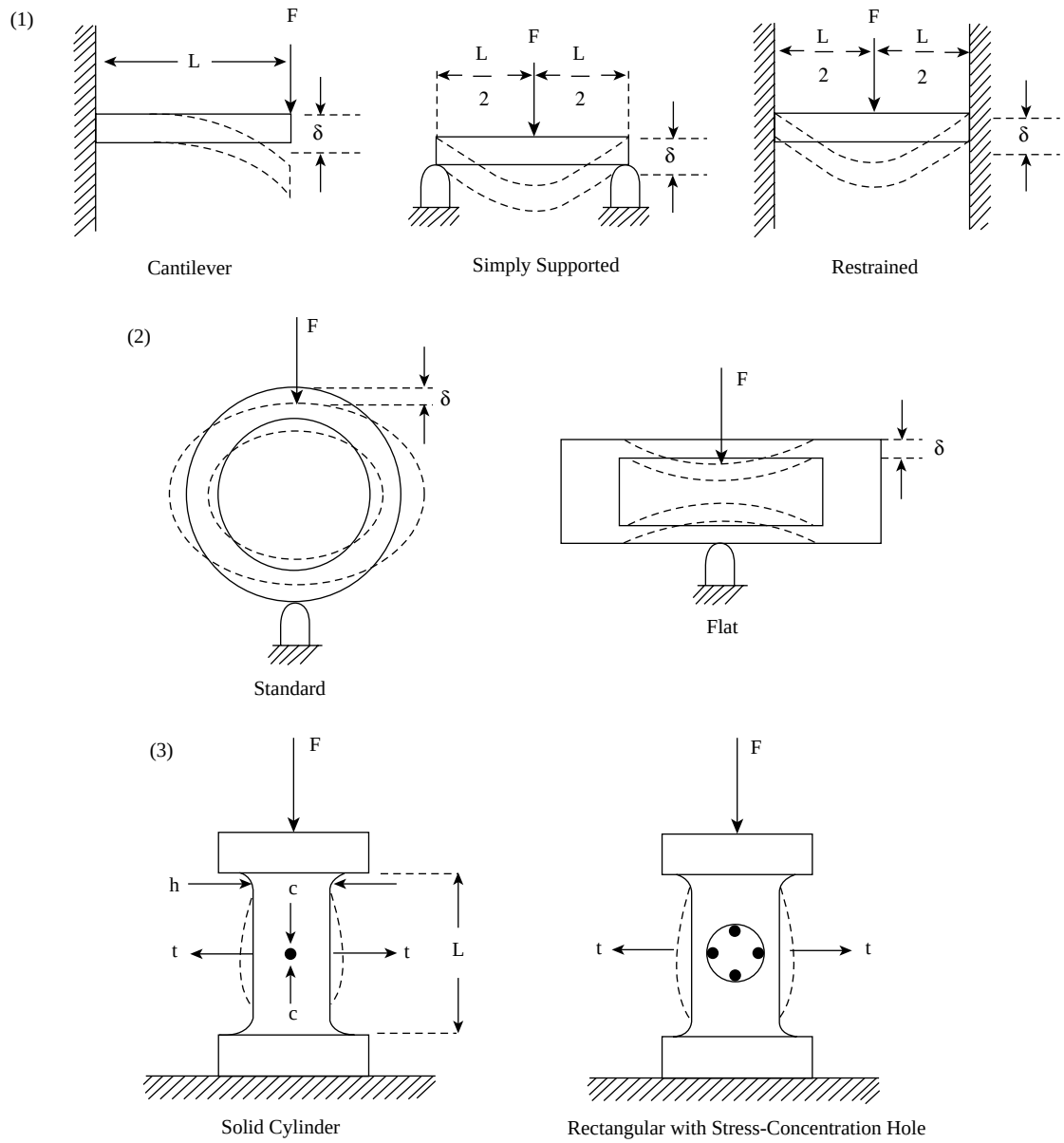

FIG. 7.21a

Examples of load cells sensing elements: (1) beam, (2) proving ring, (3) column.

in strain gauge technology has been the introduction of diffused semiconductor strain gauges. In these devices, by the use of photolithographic masking techniques, the semiconductor is directly deposited on the strained (silicon) member, without requiring the use of adhesives or bonding agents. This eliminates the problems of creep and hysteresis.

A further improvement in strain gauge technology has been the introduction of the thin-film strain gauge. This element is produced by depositing a thin metal alloy layer on a metal surface using vacuum deposition or sputtering techniques. The advantage of this design is in the molecular bonding that results, eliminating the need for a bonding adhesive. The other advantage is that the stressed force detector does not need to be silicone, but can be a metallic diaphragm or beam with a deposited layer of ceramic insulation.

Piezoelectric Dynamometers

The piezoelectric element differs from other force sensors in that it does not detect the deformation of some sensing element, but rather it is the sensing element. The piezoelectric crystal sensor is also different in that although it is used to detect near static forces, it is particularly suited to detect dynamic forces, such as shockwaves or impact forces. This is because the electrical signal that the crystal generates is present only for a short period after the force is applied. Therefore the piezoelectric load washers, force links, or force probes are mainly used for dynamic force detection. Another characteristic of the basic piezoelectric force transducer is that it only responds to compression forces; this limitation can be overcome by preloading the crystal.

© 2003 by Béla Lipták

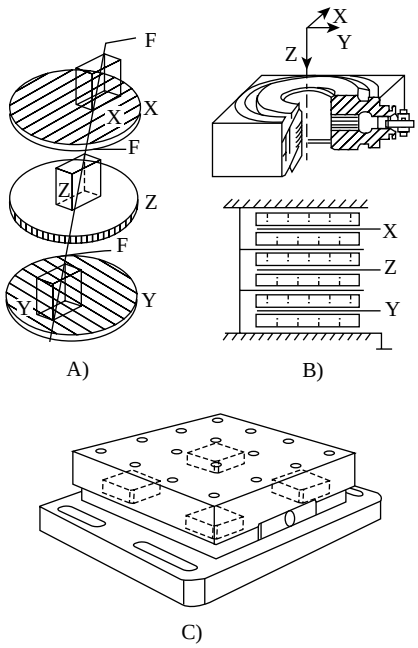

FIG. 7.21b

The three component discs (A) of a piezoelectric force transducer (B) and a multicomponent dynamometer platform (C) are restricted to dynamic force measurement. (Courtesy of Kistler Instrument Corp.)

In this transducer, shown in Figure 7.21b, a stack of quartz discs or plates and electrodes is sandwiched between parallel loading plates inside a steel housing. To detect larger dynamic forces, multicomponent dynamometers (platforms) are built with the four transducers placed in a rectangular arrangement between the loading and base plates. As the individual discs are sensitive to the force vectors around the *x*, *y*, or *z*-axis, their outputs can be tied together in a three-channel system of detection.

TORQUE MEASUREMENT

Torque is defined as the action that tends to produce rotation (Table 7.21c). Specifically, it is the moment due to a tangential force, $T = LF$, where T is torque, L the length of the force arm, and F is the force. If a free body rotates around an axis, torque can be expressed as the product of the body's moment of inertia, I, and its angular acceleration, α, as $T = I\alpha$.

When a torque is applied to one end of a cylindrical shaft while the other end is kept fixed, the shaft will be twisted. This twist can be measured by three methods:

1. Sensing the strain that the shaft has experienced.
2. Measuring the angular difference of a generatrix of the cylinder at both of its ends.
3. Sensing the change of the magnetic properties of a ferromagnetic shaft, which will change due to torque transmitted stresses (magnetostrictive effect).

TABLE 7.21c

Multipliers for Converting among Torque Units

To Convert: Pound-foot	
To	*Multiply by*
Gram-inch	5443.1088
Ounce-inch	192.0
Pound-inch	12.0
Kilogram-centimeter	13.8257
Kilogram-meter	0.138257
To Convert: Newton-meter	
To	*Multiply by*
Pound-inch	8.8511
Pound-foot	0.73757
Ounce-foot	11.8009
Kilogram-meter	0.10197
Dyne-centimeter	10E-6
$HP = \frac{TN}{63000}$ where,	T (lb. in.), N (rpm)

If the shaft rotates and is loaded, torque is more easily measured by opposing a torque that keeps the shaft balanced. The operation of mechanical, electromechanical, optical, and electronic torque measuring transducers are all based on one of the above-mentioned phenomena.

Torque transducers generally consist of two basic components: a structure, which is designed to deform microscopically under applied torque, and a device, which serves to convert this deformation to a measurement signal. For rotary equipment, the two types of torque transducers available are the in-line rotating torque transducers and the in-line stationary transducers.

In addition, there are the reaction torque transducers, which sense the torque on the housing or mount of motors or pumps, instead of detecting it on the shaft. These units are most often used in power transmission installations. The measurement is convenient and can be achieved by floating the machine on bearings, so that the force needed to prevent movement can be measured. Measurements obtained using this type of transducer are not as accurate as those made by direct shaft sensors due to the interference of the connecting pipes and electric conduits. In the case of motors, this technique of torque detection also disregards the inertia of the rotor, which contributes to the inaccuracy of the measurement.

ROTATING TRANSDUCERS

For the monitoring of small torques, the mechanical deflection of rotating torsion bars is used as a means of measurement. These units are available with ranges from 0–0.5 to 0–50 lb-in. (0–0.6 to 0–60 kg-cm). The measurement is bidirectional and the indicator can be a self-contained mechanical display (Figure 7.21d) or can be an electrical signal for remote display.

© 2003 by Béla Lipták

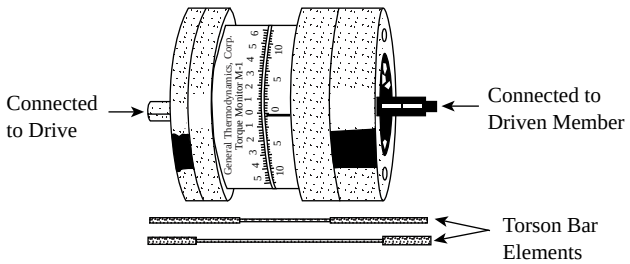

FIG. 7.21d
Torsion-bar-type torque indicator.

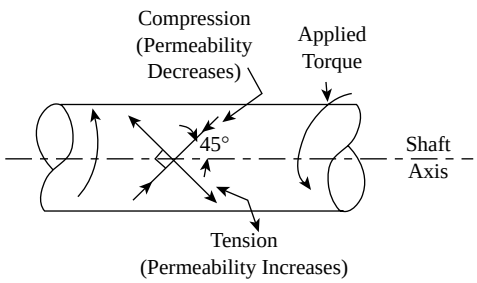

FIG. 7.21e
Tension-compression stresses on the surface of a circular shaft.

The in-line rotating transducer for larger torques consists of a metal shaft with bonded strain gauges electrically connected in the form of a Wheatstone bridge. Figure 7.21e illustrates the stresses acting on a rotating shaft subject to torsion. In one direction, at a 45° angle to the axis, pure tensile stress exists; at 45° in the other direction, pure compressive stress is extant. The rotor shaft is elastic and will deflect minutely under the imposed stresses. The strain gauges are located on the shaft to sense compressive and tensile deformation due to torsion. The Wheatstone bridge output is in proportion to torsion and hence to torque. For rotating shafts, bridge power and output voltage are connected to the sensors through:

1. Slip-rings and brushes (direct contact)
2. Rotating transformer (inductive coupling)
3. Telemetry

Direct Contact Slip-rings and brushes are limited to rotational speeds in the order of 100 ft/sec (30 m/sec) at the brush surfaces. For very high speeds, the rotating transducer can be provided with mist-lubricated bearings and air-cooled brush surfaces. The slip-rings consist of five rotating rings upon which rest five pairs of brushes (spring loaded electric contacts), conducting excitation to and signals from the torque transducer. The rings are usually made out of coined silver, while the brushes are silver-graphite. When measurements are intermittent, brush lifting features are provided to extend the brush life.

The torque transducers usually generate 1.5 or 2 mV of output per volt excitation. In terms of maintenance, the slip-ring assemblies and brush holders require periodic cleaning, while the brushes require periodic replacement. The slip-rings and ball bearings limit the maximum rpm to 2500 at high, 4000 at medium, and 6000 at low torques. Figure 7.21f shows the location of the strain gauges, slip-rings, and bearings. Theoretically, axial tension and compression forces or lateral bending moments have no effect on the torque measurement. However, it is still recommended to install the torque sensor between flexible couplings that have axial play in them in order to protect the transducer from damage.

Inductive Coupling A transducer with noncontacting power supply and signal pickoff is shown in Figure 7.21g. The bridge power and output signals are transmitted between the rotating and the stationary members through transformers. The bridge power is a constant amplitude, high-frequency sine wave, and the output is a sine wave of the power frequency whose amplitude is a function of torque. Consequently, the power supply electronics must include an oscillator to generate the carrier frequency. The output electronics includes a demodulator to produce a DC signal in proportion to the peak of the output sine wave. This sensor is superior to the slip-ring design, because contact resistance and friction does not exist. Therefore, the effects of heating are absent and cannot degrade the measurement.

As the excitation voltage for the strain gauge is inductively coupled and the output signal from the strain gauge circuit is converted to a modulated pulse frequency and is capacitively transferred to the stationary housing, the limitations associated

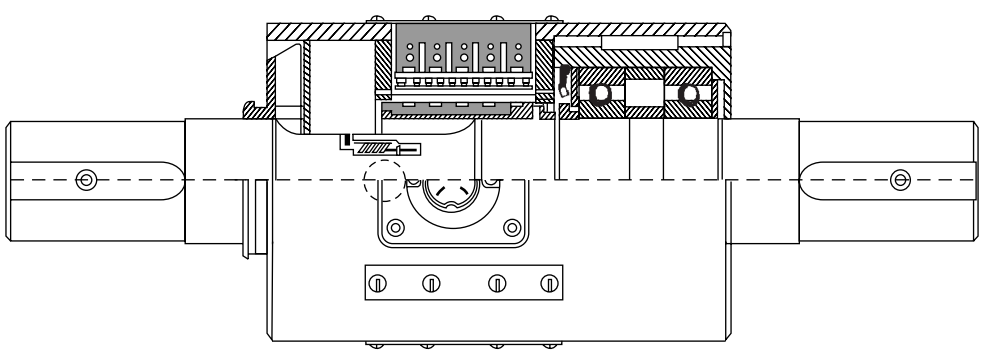

FIG. 7.21f
Rotating torque transducer with slip-rings and bearings. (Courtesy of Hottinger Baldwin Measurements Inc.)

© 2003 by Béla Lipták

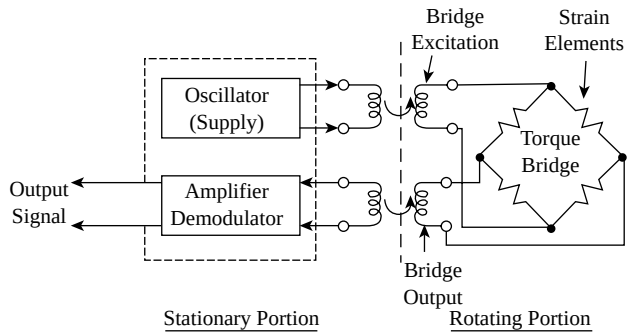

FIG. 7.21g
In-line rotating torque transducer.

with the slip-rings are also eliminated. This means that the maximum rotational speed of the shaft can reach 15,000 rpm. If only the slip-rings are eliminated, the spindle bearings still require lubrication every 16,000 running hours. Designs that have neither slip-rings nor bearings tend to completely eliminate the need for this type of maintenance (Figure 7.21h).

Stationary Transducers

Several stationary transducer designs are available. In many cases, the sensors include a component that is fixed to the shaft, but the sensing section of the torque transducer is stationary and does not rotate. Examples of this type of transducers are the magnetostrictive and several displacement type torque transducers. Such designs as the variable-illumination and the phase displacement photoelectric torque transducers[2] are able to measure the angular displacement between two sections of a rotating shaft.

Magnetostrictive Torque Transducer Magnetostrictive torque transducers utilize the Wiedemann effect in providing a torque measurement. The magnetostrictive effect causes changes in the permeability of the materials subjected to tensile or compressive stresses. Permeability is a magnetic property related to the ability of the material to concentrate magnetic flux. Permeability increases under tensile stress and decreases under compressive stress.

The sensor consists of two primary and two secondary windings mounted near the rotating shaft as shown in Figure 7.21i. The secondary coils, S_1 and S_2, are coupled by magnetic lines of flux through the shaft to the primaries. With no loading on the shaft, the permeability of the shaft is uniform and equal, but opposite voltages are induced in the secondary windings of S_1 and S_2. With the shaft under torsion, permeability and the number of magnetic lines of flux increase in the direction of tension and decrease in the direction of compression. Therefore, the voltages induced in S_1 and S_2 do not cancel out and their algebraic sum is in proportion to the torque.

Magnetically, the windings are arranged to produce a circuit analogous to the Wheatstone bridge. Figure 7.21j shows the Wheatstone bridge analogy with the battery being equivalent to the primary windings, P_1 and P_2, in Figure 7.21i. The reluctances, R_{P1}, R_{P2}, R_{S1}, and R_{S2}, are analogous to electrical resistances and represent the reluctance of the corresponding air gap between winding and shaft in Figure 7.21i. The reluctances of the metal shaft are represented by R_A, R_B, R_C, and R_D. With no loading on the shaft, the bridge is in balance and the output voltage is zero.

A variation of the basic design consists of many primary and secondary windings arranged on a ring fitted around the torsion shaft. This feature eliminates errors in output voltage

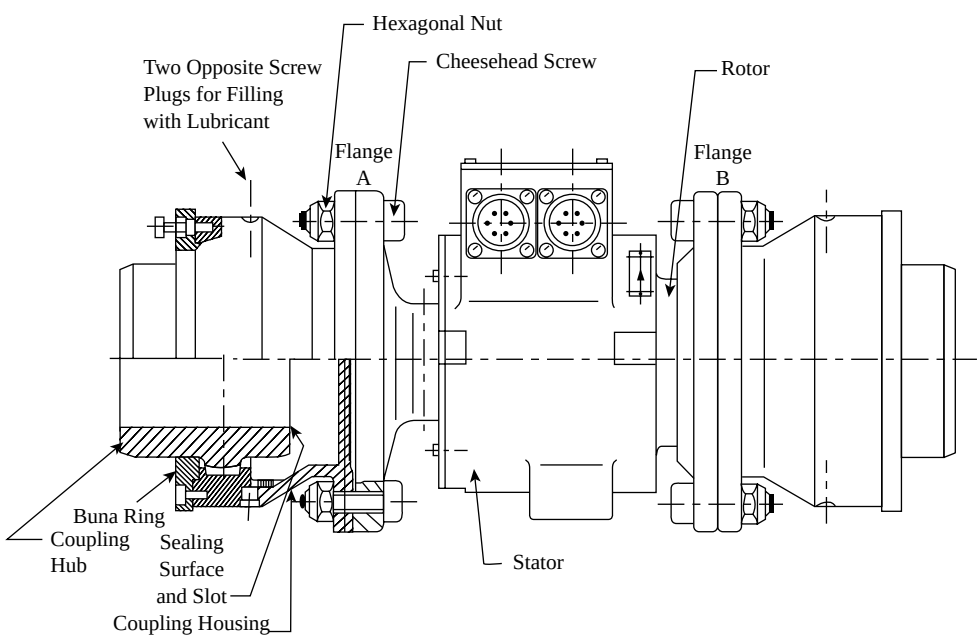

FIG. 7.21h
Inductively coupled torque transducer. (Courtesy of Hottinger Baldwin Measurements Inc.)

© 2003 by Béla Lipták

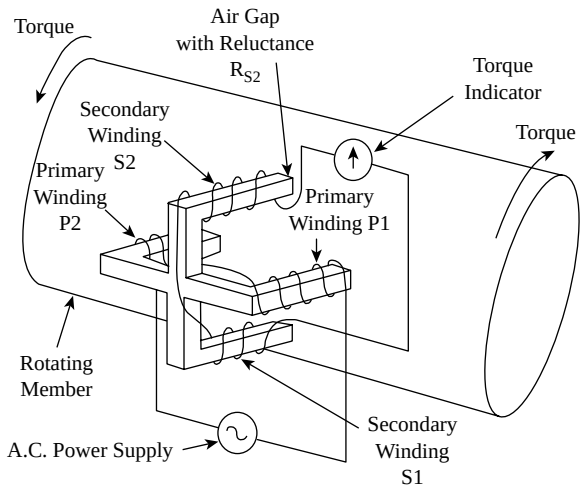

FIG. 7.21i
Noncontacting torque sensor.

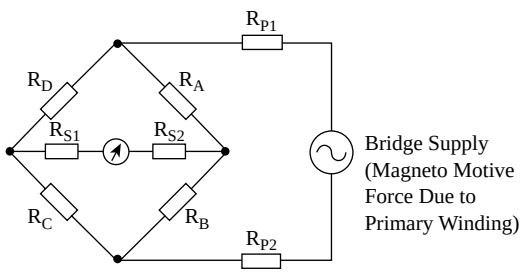

R_{P1}, R_{P2} = Primary Winding Air - Gap Reluctance
R_{S1}, R_{S2} = Secondary Winding Air - Gap Reluctance
R_A, R_B, R_C, R_D = Reluctance of Metal between Adjacent Air - Gaps

FIG. 7.21j
Wheatstone bridge analogy of magnetic circuit for transducer in Figure 7.21i.

due to residual magnetism that will induce an additional voltage in the output windings of the above-mentioned unit. By locating many pole pieces around the shaft circumference, the stresses are integrated with respect to time so that the effect of instantaneous errors is minimized.

Angular Displacement Type Torque Transducers The angular displacement between two sections of a rotating shaft can also be related to torque. The angle is proportional to the amount of the torque and the length of the shaft. Theoretically, it is inversely proportional to the fourth power of the shaft's diameter.

Figure 7.21k shows a possible solution for angular displacement measurement. Two identical toothed wheels are fixed on the shaft a certain distance apart. Two proximity sensors, one at each wheel, produce alternating output voltages whose phase difference is proportional to torque. Alternatively, a light source and photocell can be mounted on opposite sides of the wheels and the amount of light falling on the photocell is related to torque.

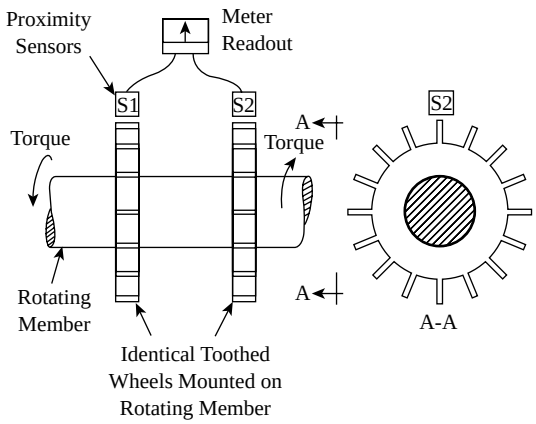

FIG. 7.21k
Proximity sensors used for torque measurement.

Conclusions about Torque Transducers

The displacement caused by torque can be detected not only by optical and inductive sensors, but also by capacitive and potentiometric types as discussed in Sections 7.10 and 7.14. In electrical motors, torque can also be measured indirectly, based on the detection of field and armature currents. This method is inaccurate, because it does not consider the effects of bearing friction and motor inertia.

Of the designs available, stationary sensors measuring variations of permeability lend themselves very well to existing installations where modifications to accommodate a sensor must be minimized. The ring version of this design is preferred since it is less sensitive to speed variations, bending, or side thrust than the single point measurement. Rotating sensors are generally comparable to the stationary types except that they must be installed on the shaft, which may not always be feasible because of space limitations.

Designs using slip-rings to connect power and signal to the rotating member are generally not desirable because of contact wear and the associated maintenance plus the electrical noise introduced into the output. Slip-ring designs should be avoided, especially in dirty environments, where dirt buildup can cause erratic output or result in a complete loss of signal.

All designs discussed are temperature-sensitive and compensation is required.

TEST GAUGES AND TEST STANDS

A variety of handheld or test-stand-mounted devices are available to measure tensile, compression, or torque forces. Their application might include the measurement of spring or sliding friction forces, chain tensions, clutch release forces, peel strengths of laminates, labels or pull-tabs of cans, and many others.

The portable test gauges can be mechanical or battery-operated or can be microprocessor-based with RS-232 output. The digital electronic test gauge is usually provided with a

© 2003 by Béla Lipták

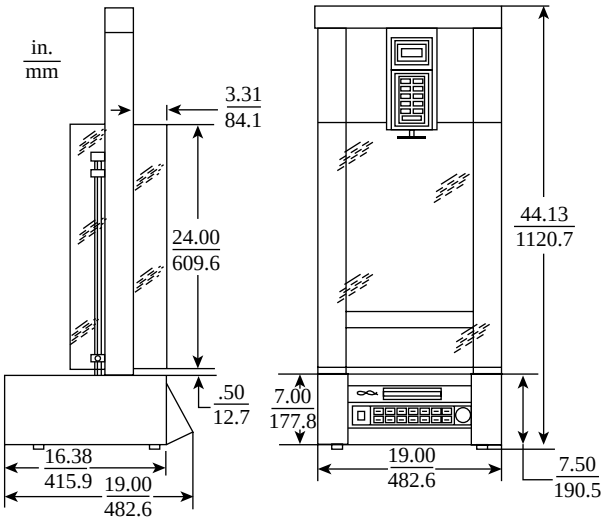

FIG. 7.21l

Motorized test stand can perform tension and compression force measurements up to 500 lb (220 kg) range. (Courtesy of AMETEK.)

universal load cell (detects both tension and compression) and a liquid crystal display. These devices require no switching when the detected condition changes from tension to compression, because the universal sensing heads are suitable for detecting both the compression and the tension forces within scale ranges starting at 0.5 to 500 lb (0.25 to 220 kg). Each gauge is provided with a compression plate and a stainless steel tension hook.

The digital electronic test gauges can also detect torque from full scale ranges of 50 oz-in. to 100 lb-in. (43 to 120 kg-cm). The sensing head is available with a variety of adapters that make it suitable to test the torque required in a variety of operations. An adjustable chuck is available to hold rotating shafts or other adapters to measure the torque required to open bottle caps.

A variety of test stands are also available to mount the force or torque detector gauges. Some of these test stands are manually operated with the travel platform moved by a worm-gear, screw, or hand-wheel systems. Others are pneumatically actuated or electrical motor operated and provided with a microprocessor for programming the test (Figure 7.21l).

References

1. Friebele, J., "Fiber Bragg Gratind Strain Sensors: Present and Future Applications in Smart Structures," *Optics & Photonics News*, pp. 33–37, August 1998.
2. Norton, H.N., *Sensor and Analyzer Handbook*, New York: Prentice-Hall, 1982.

Bibliography

Bakalidis, G.N., Glavas, E., Voglis, N.G., and Tsalides, P., "A Low-Cost Fiber Optic Force Sensor," *IEEE Transactions on Instrumentation and Measurement*, Vol. 45, Issue 1, pp. 328–331, February 1996.

Beihoff, B., "A Survey of Torque Transduction Methodologies for Industrial Applications," *Conference Record of 1996 Annual Pulp and Paper Industry Technical Conference*, Piscataway, NJ: IEEE Industry Applications Society, 1996, pp. 220–229.

Cole, D.J. and Cebon, D., "A Capacitative Strip Sensor for Measuring Dynamic Type Forces," *IEE Second International Conference on Road Traffic Monitoring*, London, 1989, pp. 38–42.

Dymond, J.H., Ong, R., and McKenna, P.G., "Locked-Rotor and Acceleration Testing of Large Induction Machines-Methods, Problems, and Interpretation of the Results," *IEEE Transactions on Industry Applications*, Vol. 36, Issue 4, pp. 958–964, July–August 2000.

Garshelis, I.J. and Conto, C.R., "A Torque Transducer Utilizing Two Oppositely Polarized Rings," *IEEE Transactions on Magnetics*, Vol. 30, Issue 6, Parts 1–2, pp. 4629–4631, November 1994.

Gardner, J.W., Microsensors Principles and Applications, New York: John Wiley & Sons, 1995.

Grantham, C. and Rahman, F., "A Novel Machineless Dynamometer for Load Testing Three-Phase Induction Motors," *IEE Sixth International Conference on Electrical Machines and Drives*, pp. 202–207, 1993.

Hossain, A. and Rashid, M.H., "Force transducer using amorphous Metglas ribbon," *IEEE Transactions on Industry Applications*, Vol. 26, Issue 6, pp. 1158–1164, November–December 1990.

Hovland, G.E. and McCarragher, B.J., "Dynamic Sensor Selection for Robotic Systems," *Proceedings of the IEEE International Conference on Robotics and Automation*, Vol. 1, pp. 272–277, 1997.

Hristoforou, E. and Reilly, R.E., "Force Sensors Based on Distortion in Delay Lines," *IEEE Transactions on Magnetics*, Vol. 28, Issue 4, pp. 1974–1977, July 1992.

IEE Colloquium on Instrumentation of Rotating Electrical Machines (Digest No. 036), 1991.

IEE Colloquium on Sensing Via Strain' (Digest No. 1993/191), 1993.

Jin, B., Chen, X.-Z., and Leung, W.-S., "Development and applications of advanced intelligent instruments for dynamic torque-speed measurement," 20th International Conference on Industrial Electronics, Control and Instrumentation, *Proceedings of the IECON '94*, Vol. 2, pp. 894–899, 1994.

Kaneko, M., "Twin-head six-axis force sensors," *IEEE Transactions on Robotics and Automation*, Vol. 12, Issue 1, pp. 146–154, February 1996.

Kazan, A.D., *Transducers and Their Elements: Design and Application*, New York: Prentice-Hall, 1994.

Kenny, T., "Nanometer-scale force sensing with MEMS devices," *IEEE Sensors Journal*, Vol. 1, Issue 2, pp. 148–157, August 2001.

Kerbel, B. and Artjuhina, L., "Employment Piezoelectric Transducers in Force-Meter Equipment," *KORUS 2000: Proceedings of the 4th Korea-Russia International Symposium on Science and Technology*, Vol. 3, pp. 84–88, 2000.

Kuhne, S. and Riefenstahl, U., "A New Torque Calculator for AC Induction Motor Drives That Improves Accuracy and Dynamic Behaviour," *Proceedings of the IEEE International Symposium on Industrial Electronics, ISIE '99*, Vol. 2, pp. 498–503, 1999.

Luo, R.C., "A Microcomputer-Based Intelligent Sensor for Multiaxis Force/Torque Measurement," *IEEE Transactions on Industrial Electronics*, Vol. 35, Issue 1, pp. 26–30, February 1988.

Moreland, J., Jander, A., Beall, J.A., Kabos, P., and Russek, S.E., "Micromechanical Torque Magnetometer for in situ Thin-Film Measurements," *IEEE Transactions on Magnetics*, Vol. 37, Issue 4, Part 1, pp. 2770–2772, July 2001.

Northrop, R.B., *Introduction to Instrumentation and Measurements* (Electrical Engineering Systems Series), Boca Raton, FL: CRC Press, 1997.

Norton, H.N., *Handbook of Transducers*, New York: Prentice-Hall, 1998.

Perino, P.R., "Thin-Film Strain Gage Transducers," *Instruments and Control Systems*, December 1965.

Ritz, G., "Weight Systems Come of Age," *Control*, May 1994.

© 2003 by Béla Lipták

Sutor, A., Lerch, R., Hohe, H.-P., and Gavesi, M., "New CMOS-Compatible Mechanical Shear Stress Sensor," *IEEE Sensors Journal*, Vol. 1, Issue 4, pp. 345–351, December 2001.

Tattamangalanm, R.P., *Industrial Instrumentation: Principles and Design*, Heidelberg: Springer Verlag, 2000.

"Torque Measurement," *Measurements and Control*, February 1994.

"Torque Measuring Equipment," *Instruments and Control Systems*, February 1964.

"Torque Measurement Without Touching," *Control Engineering*, May 1968.

Weymouth, L.J., Starr, J.E., and Dorsey, J., "Bonded Resistance Strain Gages," *Exp. Mech.*, March 1979.

Wolff, U., Schmidt, F., Scholl, G., and Magori, V., "Radio accessible SAW sensors for non-contact measurement of torque and temperature," *Proceedings of the IEEE Ultrasonics Symposium*, Vol. 1, pp. 359–362, 1996.

Zakrzewski, J., "Combined magnetoelastic Transducer for Torque and Force Measurement," IEEE *Transactions on Instrumentation and Measurement*, Vol. 46, Issue 4, pp. 807–810, August 1997.

Zhang, W., Dong, X., Zhao, Q., Kai, G., and Yuan, S., "FBG-Type Sensor for Simultaneous Measurement of Force (or displacement) and Temperature Based on bilateral cantilever beam," *IEEE Photonics Technology Letters*, Vol. 13, Issue 12, pp. 1340–1342, December 2001.

© 2003 by Béla Lipták

7.22 Vibration, Shock, and Acceleration

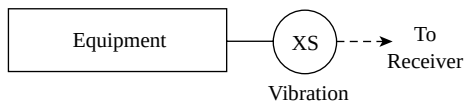

Flow Sheet Symbol

A. BRODGESELL (1969, 1982) **B. G. LIPTÁK** (1995)
H. EREN (2003)

Types:	A. Seismic (Inertial) sensors B. Piezoelectric sensors C. Piezoresistive and strain gages D. Electromechanical sensors E. Capacitive and electrostatic sensors F. Micro- and nanosensors G. Velocity sensors H. Noncontact proximity sensors I. Mechanical switches J. Optical sensors
Operating Temperature:	A. –20°C to 70°C B. Generally –60 to 500°F (–50 to 260°C); special designs available for –450 to 1500°F (–268 to 816°C) C. –40 to 250°F (–40 to 121°C) F. –40 to 120°C
Typical Range of Vibration Frequency (Hz):	(Most rotary equipment vibrates at frequencies between 1 and 20,000 Hz.) A. DC to 50 Hz. B. From 1 to 15,000 Hz; special designs from under 1 Hz up to 30,000 Hz C. From 0 to about 1000 Hz D. Between 10 and 1000 Hz F. 0 to 3500 Hz H. 0 to 5000 Hz
Typical Range of Vibration Amplitude (g):	(Most rotary equipment vibrates at amplitudes of 0.01 to 100 g.) A. ±0.5 or ±2.0 g B. Generally from under 1 to 1000 g; special sensors are available to detect shock in ranges exceeding 10,000 g D. 0.02 to 10 in./s (0.5 to 254 mm/s) F. ±5,000 g H. 2 to 600 g for capacitance, 5 to 160 mil for eddy current
Nonlinearity:	B. 1% of straight line C. 1%
Sensitivity:	A. 0.02 g/g B. For amplitude ranges up to 5 g about 1000 mV/g; for ranges around 1000 g about 3 mV/g or 5 pico C/g C. From 0.25 to 25 mV/g corresponding to ranges of 5 to 1000 g D. 250 mV/in./s F. 0.05 mV/g

© 2003 by Béla Lipták

Partial List of Suppliers:

ACT/Techkor
ANCO Engineers, Inc.
ATA Sensors
Balmac Inc.
Bruel & Kjaer (www.bkhome.com)
Campbell Scientific, Inc.
CEC Vibration Products
Dytran Instruments Inc. (www.dytran.com)
Endevco Corporation (www.endevco.com)
Entran Sensors and Electronics (www.entran.com)
Hardy Instruments Inc.
Hewlett-Packard Co. (www.hp.com)
Indikon Company, Inc.
Metrix Instrument Co.
Kistler Instruments Corp. (www.kistler.com)
L.A.B. Equipment, Inc. (www.labequipment.com)
MB Dynamics, Inc. (www.mbdynamics.com)
MEMS Equipment (www. xactix.com)
MetroLaser, Inc. (www.metrolaserinc.com)
Micro-Epsilon
Montronix, Inc.
MTI Instruments Inc.
Murata Electronics
NanoPositioning & Piezo Techno
Oceana Sensor Technologies, Inc.
Ometron, Inc. (www.ometron.com)
Ono Sokki Co. Ltd.
Optodyne, Inc.
PCB Piezotronics, Inc.
PI Polytec KK (www.physikinstrumente.com)
R.C. Electronics, Inc. (www.rcelectronics.com)
Sencera Company Ltd.
Shinkawa Electric Co., Ltd.
Silicon Designs, Inc.
Spectral Dynamics, Inc. (www.sd-corp.com)
Sprengnether Instruments, Inc. (www.Sprengnether.com)
Syscom Instruments
TDK Corporation of America
Trig-tek Inc.
Trilion Quality Systems
VibroSystM Inc.
Walesch Electronic GmbH
Wilcoxon Research, Inc. (www.wilcoxon.com)
Zygo Corp. (www.zygo.com)

INTRODUCTION

Displacement, velocity, and acceleration are products of motion and they are related to each other by time. Because of ease in measurements, acceleration is particularly an important section of kinematic quantities. Other quantities are the position, velocity, acceleration, and jerk, which bear linear relationships with the neighboring ones. This indicates that all the kinematic quantities can be derived from a single known quantity. For example, acceleration can be obtained by differentiating the corresponding velocity or by integrating the jerk. Likewise, velocity can be obtained by differentiating the position or by integrating the acceleration. In practice, only the integration is widely used since it provides better noise characteristics and attenuation.

Acceleration is an important parameter for general-purpose absolute motion measurements, vibration, and shock sensing. Many different accelerometers are commercially available in a wide a range and type to meet diverse application requirements, mainly in three areas:

1. Commercial applications: automobiles, ships, appliances, sports, and other hobbies
2. Industrial applications: robotics, machine control, vibration testing, and instrumentation

© 2003 by Béla Lipták

3. High reliability applications: military, space and aerospace, seismic monitoring, tilt measurements, vibration, and shock measurements.

The unit of acceleration is the Earth's gravitational acceleration, *g*, which equals 32.3 ft/sec^2 in English units, or 9.8 m/s^2 in metric units. It is this unit that is used to express the amplitude of acceleration.

There are two classes of acceleration measurements techniques: *direct measurements* by specific accelerometers and *indirect measurements* where velocity is differentiated. The applicability of these techniques depends on the type of motion (rectilinear, angular, curvilinear motions) or equilibrium centered vibration. For rectilinear and curvilinear motions, the direct measurement accelerometers are preferred. However, the angular acceleration is usually measured by indirect methods. Accelerometers that measure the acceleration of an object can be classified in a number of ways, including mechanical or electrical types, active or passive types, deflection or null-balance types, and others. Accelerometers used in vibration and shock measurements are usually the deflection types, while those used for the measurement of motions of vehicles, aircraft, etc. for navigation purposes may be either deflection or null-balanced.

The main theme of this section is vibration, shock, and acceleration sensing. We will largely concentrate on the direct techniques that are generally achieved by the accelerometers of the following types:

1. Seismic (Inertial)
2. Piezoelectric
3. Piezoresistive and strain gages
4. Electromechanical
5. Capacitive and electrostatic
6. Micro- and nanosensors
7. Velocity sensors
8. Noncontact proximity sensors
9. Mechanical switches
10. Optical sensors

In recent years, the Integrated Micro-Electro-Mechanical Systems technology is used to produce a sizable portion of sensors and accelerometers along with well-established piezoelectric and bulk-micromachined devices. This article deals with the new technology as well as the traditional established ones.

In the preceding sections, acceleration and vibration as phenomenon are explained to make the users of these devices fully aware of some important concepts for a fruitful and meaningful use and interpretation of their test results.

ACCELERATION AS A PHENOMENON AND DYNAMIC CHARACTERISTICS

Acceleration is related to motion, a vector quantity, exhibiting a direction as well as magnitude. The direction of motion is described in terms of some arbitrary Cartesian or orthogonal coordinate systems. Typical rectilinear, angular, and curvilinear motions are illustrated in Figures 7.22a, parts (a) to (c), respectively. The governing equations of these motions are as follows:

Rectilinear acceleration:

$$a = \lim_{\Delta t \to 0} \frac{\Delta v}{\Delta t} = \frac{dv}{dt} = \frac{d(ds/dt)}{dt} = \frac{d^2 s}{dt^2} \qquad \textbf{7.22(1)}$$

Angular acceleration:

$$a = \lim_{\Delta t \to 0} \frac{\Delta \omega}{\Delta t} = \frac{d\omega}{dt} = \frac{d(d\theta/dt)}{dt} = \frac{d^2 \theta}{dt^2} \qquad \textbf{7.22(2)}$$

Curvilinear acceleration:

$$a = \frac{dv}{dt} = \frac{d^2 x}{dt^2} i + \frac{d^2 y}{dt^2} j + \frac{d^2 z}{dt^2} k \qquad \textbf{7.22(3)}$$

where a and α are the accelerations; v and ω are the speeds; s the distance; θ is the angle; i, j, and k are the unit vectors in x, y, and z directions, respectively.

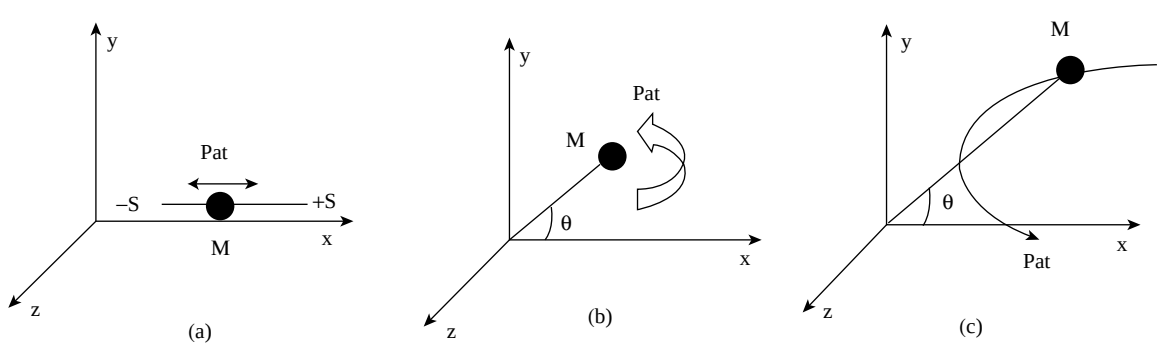

FIG. 7.22a
Types of motions to which accelerometers are commonly applied.

© 2003 by Béla Lipták

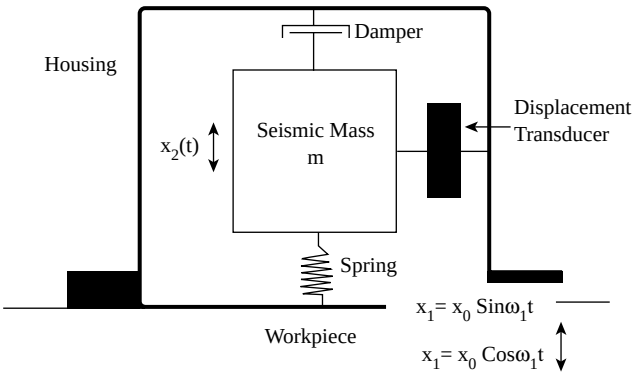

FIG. 7.22b
A typical seismic accelerometer.

The majority of accelerometers can be viewed and analyzed as a single-degree-of-freedom seismic instrument that can be characterized by a mass, a spring, and a damper arrangement as shown in Figure 7.22b. In the case of multi-degrees-of-freedom systems, the principles of curvilinear motion can be applied as in Equation 7.22(3) and multiple transducers must be used to create uniaxial, biaxial, or triaxial sensing points of the measurements.

If a single-degree-of-freedom system behaves linearly in a time invariant manner, the basic second-order differential equation describing the motion of the forced mass-spring system can be written as

$$f(t) = m\frac{d^2x}{dt^2} + c\frac{dx}{dt} + kx \qquad \textbf{7.22(4)}$$

where $f(t)$ is the force, m is the mass, c is the velocity constant, and k is the spring constant.

The base of the accelerometer is also in motion. When the base is in motion, the force is transmitted through the spring to the suspended mass depending on the transmissibility of the force to the mass. Equation 7.22(4) may be generalized by taking the effect motion of the base into account as

$$m\frac{d^2z}{dt^2} + c\frac{dz}{dt} + kz = mg\cos\theta - m\frac{d^2x_1}{dt^2} \qquad \textbf{7.22(5)}$$

where $z = x_2 - x_1$ is the relative motion between the mass and the base, x_1 is the displacement of the base, x_2 is the displacement of mass, and θ is the angle between the sense axis and gravity.

The complete solution to Equation 7.22(5) can be obtained by applying the superposition principle. The superposition principle states that if there are simultaneously superimposed actions on a body, the total effect can be obtained by summing the effects of each individual action. Using the superposition and applying Laplace transform gives

$$\frac{X(s)}{F(s)} = \frac{1}{ms^2} + cs + k \qquad \textbf{7.22(6)}$$

or

$$\frac{X(s)}{F(s)} = \frac{K}{\left(s^2/\omega_n^2 + 2\zeta s/\omega_n + 1\right)} \qquad \textbf{7.22(7)}$$

where s is the Laplace operator, $K = 1/k$ is the static sensitivity, $\omega_n = \sqrt{k/m}$ is the undamped critical frequency rad/s, and $\zeta = (c/2)\sqrt{km}$ is the damping ratio.

As can be seen in the performance of accelerometers, the important parameters are the static sensitivity, the natural frequency, and the damping ratio, which are all functions of mass, velocity, and spring constants. Accelerometers are designed and manufactured to have different characteristics by suitable selection of these parameters.

VIBRATION AND SHOCK

Vibration can be defined in terms of displacement, velocity, or acceleration. It is essentially an oscillatory motion resulting from application of varying forces to a structure. Vibrations can be periodic, stationary random, nonstationary random, or transient. Traditional mechanical tripout devices, such as the spring-loaded magnetic holding types, are all acceleration sensors. These are actuated by changes in the vibration force at the measurement. At low frequencies these devices are severely limited because acceleration decreases with frequency, and large displacement is required to produce sufficient acceleration to trip the device.

In rotary machinery, mechanical degradation causes vibration, and the mechanical health of the equipment is monitored by measuring vibration. Vibration is measured by its frequency and amplitude. The frequency of vibration is a function of the mass of the vibrating body, and the range of vibration that occurs in compressors, turbines, and other rotary equipment is generally between 10 and 2000 Hz, with extreme values falling between 1 and 20,000 Hz. The amplitude of vibration is a function of the design of the rotary equipment, where at one extreme one might measure a vibration amplitude of only 0.01 *g* in a smoothly operating electric motor, while a high-speed gearbox might have a vibration amplitude of 100 *g* at 5000 Hz or above. In shock detection the amplitude of acceleration can reach 100,000 *g*.

If the sensor (velocity or acceleration) is mounted onto the surface of the vibrating object, it will provide a reading of absolute vibration relative to a fixed point in space. If the mass of the rotating object (and therefore its resonant frequency) would be affected by physically attaching the sensor to it, a hole can be drilled through the housing of the bearings.

© 2003 by Béla Lipták

A noncontacting proximity probe can detect the relative motion between shaft and bearing. The limitation of this approach is that if the shaft and bearing housing are both in vibration because some tie-down bolts are loose, the proximity probe will not detect this.

The electronics associated with the sensor can be integral or remote. The integral designs are less costly and less sensitive to noise, but are more limited in their operating temperatures and their vibration amplitude ranges. The main advantage of self-generating sensors is that they do not require excitation power supplies, while the main limitation is that they are not suited for the measurement of constant acceleration, such as that generated in a centrifuge.

Periodic Vibrations

In periodic vibrations, the motion of an object repeats itself in an oscillatory manner. This can be represented by a sinusoidal waveform

$$x(t) = X_p \sin \omega t \qquad \textbf{7.22(8)}$$

where $x(t)$ = time dependent displacement, $\omega = 2\pi ft$ is the angular frequency, and X_p is the maximum displacement from a reference point.

The velocity of the object is the time rate of change of displacement

$$v(t) = \frac{dx}{dt} = \omega X_p \cos(\omega t) = V_p \sin(\omega t + \pi/2) \qquad \textbf{7.22(9)}$$

where $v(t)$ is the time-dependent velocity and $V_p = \omega X_p$ is the maximum velocity.

The acceleration of the object is the time rate change of velocity

$$a(t) = \frac{dv}{dt} = \frac{d^2x}{dt^2} = -\omega^2 X_p \sin(\omega t) = A_p \sin(\omega t + \pi) \qquad \textbf{7.22(10)}$$

where $a(t)$ is the time-dependent acceleration, and $A_p = \omega^2 X_p = \omega V_p$ is the maximum acceleration.

From the preceding equations it can be seen that the basic form and the period of vibration remain the same in acceleration, velocity, and displacement. But velocity leads displacement by a phase angle of 90° and acceleration leads velocity by another 90°.

In nature, vibrations can be periodic but not necessarily sinusoidal. If they are periodic but nonsinusoidal, they can be expressed as a combination of a number of pure sinusoidal curves, determined by the Fourier analysis as

$$x(t) = X_0 + X_1 \sin(\omega_1 t + \Phi_1) + X_2 \sin(\omega_2 t + \Phi_2) + \cdots + X_n \sin(\omega_n t + \Phi_n) \qquad \textbf{7.22(11)}$$

where $\omega_1, \omega_2, \ldots, \omega_n$ are the frequencies (rad/s), $X_0, X_1, \ldots, X_n$ are the maximum amplitudes of respective frequencies, and $\phi_1, \phi_2, \ldots, \phi_n$ are the phase angles.

The number of terms may be infinite, and the higher the number of elements the better the approximation. These elements constitute the frequency spectrum. The vibrations can be represented in the time domain or frequency domain, both of which are extremely useful in the analysis.

Stationary Random Vibrations These random vibrations are met often in nature, where they constitute irregular cycles of motion that never repeat themselves exactly. Theoretically, an infinitely long time record is necessary to obtain a complete description of these vibrations. However, statistical methods and probability theory can be used for the analysis by taking representative samples. Mathematical tools such as probability distributions, probability densities, frequency spectra, cross-correlations, auto-correlations, digital Fourier transforms (DFTs), fast Fourier transforms (FFTs), auto-spectral-analysis, root-mean-square values, and digital filter analysis are some of the techniques that can be employed.

Nonstationary Random Vibrations In this case, the statistical properties of vibrations vary in time. Methods such as time averaging and other statistical techniques can be employed.

Transients and Shocks Short duration and sudden occurrence vibrations need to be measured often. Shock and transient vibrations may be described in terms of force, acceleration, velocity, or displacement. As in the case of random transients and shocks, statistical methods and FFTs are used in the analysis.

SEISMIC (INERTIAL) SENSORS

Inertial acceleration and vibration sensors make use of a seismic mass that is suspended by a spring or a lever inside a rigid frame as shown in Figure 7.22b. The frame carrying the seismic mass is connected firmly to the vibrating source whose characteristics are to be measured. As the system vibrates, the mass tends to remain fixed in its position, so that the motion can be registered as a relative displacement between the mass and the frame. An appropriate transducer senses this displacement and the output signal is processed further. In practice, the seismic mass does not remain absolutely steady, but it can satisfactorily act as a reference position for selected frequencies.

By proper selection of mass, spring, and damper combinations, the seismic instrument may be used for either acceleration or displacement measurements. In general, a large mass and soft spring are suitable for vibration and displacement measurement, while relatively small mass and a stiff

© 2003 by Béla Lipták

spring are used in accelerometers. However, the term seismic is commonly applied to instruments, which sense very low levels of vibration in the ground or structures.

In order to describe the response of seismic accelerometer, from Newton's second law the following equation of motion may be written as:

$$m\frac{d^2x_2}{dt^2} + c\frac{dx_2}{dt} + kx_2 = c\frac{dx_1}{dt} + kx_1 + mg\cos(\theta) \qquad \textbf{7.22(12)}$$

where x_1 is the displacement of the vibration frame, x_2 is the displacement of the seismic mass, c is the velocity constant, θ is the angle between the sense axis and gravity, and k is the spring constant.

Taking md^2x_1/dt^2 from both sides of the equation and rearranging gives

$$m\frac{d^2z}{dt^2} + c\frac{dz}{dt} + kz = mg\cos(\theta) - m\frac{d^2x_1}{dt^2} \qquad \textbf{7.22(13)}$$

where $z = x_2 - x_1$ is the relative motion between the mass and the base.

In Equation 7.22(13), it is assumed that the damping force on the seismic mass is proportional to velocity only. If a harmonic vibratory motion is impressed on the instrument:

$$x_1(t) = X_0\sin(\omega_1 t) \qquad \textbf{7.22(14)}$$

where ω_1 is the frequency of vibration (rad/s). Writing

$$-m\frac{d^2x_1}{dt^2} = mX_0\sin\omega_1 t$$

modifies Equation 7.22(13) as

$$m\frac{d^2z}{dt^2} + c\frac{dz}{dt} + kz = mg\cos(\theta) + ma_1\sin\omega_1 t \qquad \textbf{7.22(15)}$$

where $a_1 = mX_0\omega_1^2$.

Equation 7.22(15) will have transient and steady state solutions. The steady-state solution of this differential equation may be determined as

$$z = \frac{mg\cos\theta}{k} + \frac{ma_1\sin\omega_1 t}{\left(k - m\omega_1^2 + jc\omega_1\right)} \qquad \textbf{7.22(16)}$$

Rearranging Equation 7.22(16) results in

$$z = \frac{mg\cos\theta}{\omega_n} + \frac{a_1\sin(\omega_1 t - \phi)}{\sqrt{\left(\omega_n^2(1-r^2)^2 + (2\zeta r)^2\right)}} \qquad \textbf{7.22(17)}$$

where ω_n ($=\sqrt{k/m}$) is the natural frequency of the seismic mass; ς ($= c/2\sqrt{km}$) is the damping ratio, which also can be written in terms of critical damping ratio as $\varsigma = c/c_c$ where $c_c = 2\sqrt{km}$; ϕ ($=\tan^1[c\omega_1/(km\omega_1^2)]$) is the phase angle; and r ($=\omega_1/\omega_n$) is the frequency ratio.

For satisfactory system performance, the instrument constant c/c_c and ω_n should carefully be calculated or obtained from calibrations. In this way the anticipated accuracy of measurement may be predicted for frequencies of interest. A comprehensive treatment of the analysis is by McConnell;[1] interested readers should refer to this text for further details.

Seismic instruments are constructed in a variety of ways. In a potentiometric instrument, a voltage divider potentiometer is used for sensing the relative displacement between the frame and the seismic mass. In the majority of potentiometric accelerometers, the device is filled with a viscous liquid that interacts continuously with the frame and the seismic mass to provide damping. These accelerometers have a low frequency of operation (less than 100 Hz) and are mainly intended for slowly varying acceleration and low-frequency vibrations. A typical family of such instruments offers many different models, covering the range of ±1 to ±50 *g* full scale. The natural frequency ranges from 12 to 89 Hz, and the damping ratio ζ can be kept between 0.5 to 0.8 by using a temperature compensated liquid-damping arrangement. Potentiometer resistance may be selected in the range of 1,000 to 10,000 Ω, with a corresponding resolution of 0.45 to 0.25% of full scale. The cross-axis sensitivity is less than ±1%. The overall accuracy is ±1% of full scale or less at room temperatures. The size is about a 50 mm^3 with a mass of about 1/2 kg.

Linear variable differential transformers (LVDTs) offer another convenient means of measuring the relative displacement between the seismic mass and the accelerometer housing. These devices have higher natural frequencies than potentiometer devices (up to 300 Hz). Since the LVDT has lower resistance to motion, it offers much better resolution. A typical family of liquid-damped, differential-transformer accelerometers exhibits the following characteristics: the full scale ranges from ±2 to ±700 *g*, the natural frequency from 35 to 620 Hz, the nonlinearity 1% of full-scale. The full-scale output is about 1 V with an LVDT excitation of 10 V at 2,000 Hz, the damping ratio ranges from 0.6 to 0.7, the residual voltage at the null position is less than 1%, and the hysteresis is less than 1% full scale. The size is about 50 mm^3, with a mass of about 120 g.

Electrical resistance strain gages are also used for displacement sensing of the seismic mass. In this case, the seismic mass is mounted on a cantilever beam rather than on springs. Resistance strain gauges are bonded on each side of the beam to sense the strain in the beam resulting from the vibrational displacement of the mass. A viscous liquid that entirely fills the housing provides damping of the system. The output of the strain gauges is connected to an appropriate bridge circuit. The natural frequency of such a system is about 300 Hz. The low natural frequency is due to the need

© 2003 by Béla Lipták

for a sufficiently large cantilever beam to accommodate the mounting of the strain gauges.

One serious drawback of the seismic instruments is temperature effects requiring additional compensation circuits. The damping of the instrument may also be affected by changes in the viscosity of the fluid due to temperature. For instance, the viscosity of silicone oil, often used in these instruments, is strongly dependent on temperature.

Piezoelectric Sensors

The piezoelectric sensor is a self-generating device that is ideal for the measurement of such dynamic events as shock and vibration. They are basically motion transducers with large output signals and comparatively small sizes. They are available with very high natural frequencies and are suitable for high-frequency applications and shock measurements. Their sensing element is sandwiched between the transducer body and a seismic mass (usually tungsten). Because the seismic mass is constant, the force acting on the sensing element ($F = ma$) is proportional to acceleration. If the sensing element is a quartz crystal or lead-zirconate-titanate (PZT), an electric charge is generated (150 times more for PZT than for quartz) that is in proportion to the experienced force and therefore to acceleration.

These devices utilize a mass in direct contact with the piezoelectric component or crystal. A separation of charge is produced on the opposite faces of the crystal when it is subjected to acceleration forces. The magnitude of the voltage produced is in proportion to mechanical deformation and, hence, acceleration. Generally, these units are provided as two components: a sensor (Figure 7.22c) that mounts on the equipment and includes a solid-state amplifier and alarm switch, and a control unit that contains the readout meter, power supply, alarm reset, and facilities for vibration recording or waveform analysis by oscilloscope. In the event of application of varying motion to the sensor, the crystal experiences a varying force excitation ($F = ma$), causing a proportional electric charge q to be developed across it.

$$q = d_{ij}F = d_{ij}ma \qquad \textbf{7.22(18)}$$

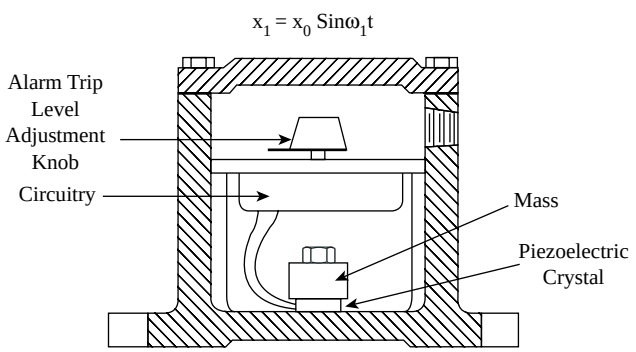

FIG.7.22c
Piezoelectric sensor.

where q is the charge developed and d_{ij} is the piezoelectric coefficient of the material.

As this equation shows, the output from the piezoelectric material is dependent on its mechanical properties, d_{ij}. Two commonly used piezoelectric crystals are PZT and crystalline quartz. They are both self-generating materials and produce a large electric charge for their size. As a result, PZTs are more sensitive and smaller in size than quartz counterparts. These accelerometers are useful for high-frequency applications.

Mathematically, their transfer function approximates to a third-order system that can be expressed as:

$$\frac{e_0(s)}{a(s)} = \frac{K_q \tau s}{C\omega_n^2(\tau s+1)\left(s^2/w_n^2 + 2\zeta s/\omega_n + 1\right)} \qquad \textbf{7.22(19)}$$

where K_q is the piezoelectric constant related to charge (C cm), τ is the time constant of the crystal, and s is the Laplace variable. It is worth noting that the crystal itself does not have a time constant τ, but the time constant is observed when the accelerometer is connected into an electric circuit, for example, an RC circuit.

The low-frequency response is limited by the piezoelectric characteristic $\tau s/(\tau s + 1)$, while the high-frequency response is related to mechanical response. The damping factor ζ is very small, usually less than 0.01 or near zero. Accurate low-frequency response requires large τ, which is usually achieved by use of high-impedance voltage amplifiers. At very low frequencies, thermal effects can have severe influences on the operation characteristics.

In piezoelectric accelerometers, two basic design configurations are used: compression types and shear-stress types. In compression-type accelerometers, the crystal is held in compression by a preload element; therefore, the vibration varies the stress in compressed mode. In a shear-stress accelerometer, vibration simply deforms the crystal in shear mode. The compression accelerometer has a relatively good mass-to-sensitivity ratio and exhibits better performance. Since the housing acts as an integral part of the spring-mass system, it may produce spurious interfaces in the accelerometer output if excited around its natural frequency.

Piezoelectric accelerometers are available in a very wide range of specifications and are offered by a large number of manufacturers. For example, the specifications of a shock accelerometer may have 0.004 pC/g in sensitivity and a natural frequency of up to 250,000 Hz, while a unit designed for low-level seismic measurements might have 1,000 pC/g in sensitivity and only 7,000 Hz natural frequency. They are manufactured as small as 3×3 mm^2 in dimension with about 0.5 g in mass, including cables. They have excellent temperature ranges and some of them are designed to survive the intensive radiation environment of nuclear reactors. However, piezoelectric accelerometers tend to have larger cross-axis sensitivity than other types, about 2 to 4%. In some cases, large cross-axis sensitivity may be minimized during installations by the correct orientation of the device. These accelerometers

© 2003 by Béla Lipták

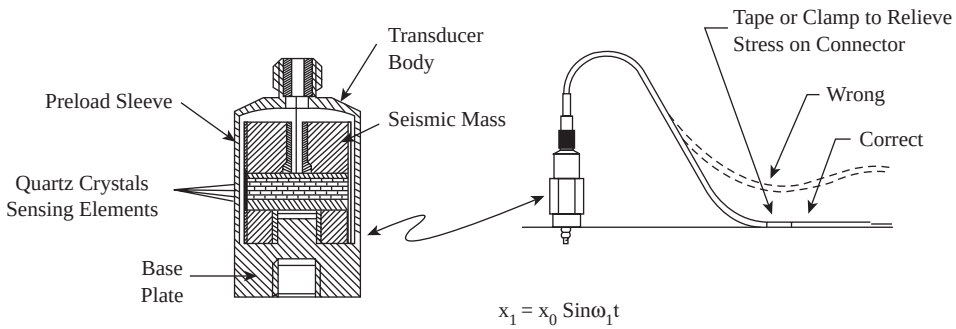

FIG. 7.22d

The main components of a piezoelectric accelerometer are the body, the sensing element, and the seismic mass. (Courtesy of Kistler Instrument Co.)

may be mounted with threaded studs, cement or wax adhesives, or magnetic holders.

Piezoelectric crystals are affected in their output by temperature variations; however, quartz and some of the newer piezoelectric ceramics are superior to such ceramics as barium titanate or PZT in their reduced sensitivity to temperature. In noisy electrical environments, electrical shielding of the crystal is recommended to reduce noise pickup.

Acceleration can expose the crystal element to compression, shear, or bending. When the vibration lifts the sensor in the compression accelerometer, the inertial mass moves downward, further compressing the already preloaded element. Conversely, downward acceleration reduces the amount of compression. In the shear accelerometer, the vibration deforms the crystal in shear. A wide variety of piezoelectric sensors are available. Some are very small in size and weight (from 1 g up), while others are designed for high-temperature service or with abilities for measuring acceleration and vibration at frequencies up to 30,000 Hz and amplitudes of up to 100,000 *g*. PZT elements have high mechanical spring constants and small inertial masses; therefore, they tend to be small and suitable for high frequencies.

The accelerometer can be mechanically connected to the vibrating surface (Figure 7.22d) or can be secured by adhesives or by magnetic means. The lighter-weight sensors are usually attached by glue, while when larger elements are used or if the vibrating surface is irregular, a mounting pad is used to provide a flat mounting surface and ground isolation to prevent ground loops. On ferromagnetic surfaces, magnetic mounts can be used when only a quick test is needed, but only up to about 1000 Hz frequency. Triaxial mounting pads are also available when three accelerometers are to be installed for three-dimensional (orthogonal) vibration analysis.

Other factors affecting the performance of piezoelectric sensors include cable, magnetic, and dynamic effects. In high-impedance accelerometers, the movement or strain on the connecting cable can cause triboelectric (charge trapping due to relative motion) noise. The straining or flexing of the accelerometer base or housing due to thermal expansion or other forces can also transmit error-causing forces to the crystal element. Because the output signal carried by the cable is low level, it needs to be protected against noise. Stray capacitive coupling can cause electrostatic noise; therefore, it should be fully shielded. One should also protect against ground loops by grounding the system at only one point. Common mode noise caused by magnetic coupling can be minimized by using twisted pairs and by not routing the cable near conductors that carry power.

PIEZORESISTIVE AND STRAIN GAUGE SENSORS

Piezoresistive Sensors

Piezoresistive sensors are essentially semiconductor strain gauges with large gauge factors. High gauge factors are obtained since the material resistivity is dependent primarily on the stress not only on the dimensions. This effect can be greatly enhanced by appropriate doping of semiconductors such as silicon. Most piezoresistive accelerometers use two or four active gauges arranged in a Wheatstone bridge. Extra precision resistors are used, as part of the circuit, in series with the input to control the sensitivity, for balancing, and for offsetting temperature effects.

Piezoresistive sensors are not self-generating and they do require a source of excitation power. They are superior to piezo-electronic crystals when low-frequency (under 10 Hz) vibrations, long duration shocks (over 10 ms), or constant accelerations are to be measured. In the wire strain design, the spring wires are usually Nichrome and the frequency range is under 1000 Hz. The bonded-foil-type accelerometer gauges have stable zero outputs and their temperature sensitivity is low. In the piezoresistive design, the wire elements are replaced by higher-sensitivity semiconductor (metallic oxide) chips.

The piezoresistive units are more rugged (but still fragile) and can operate at frequencies of 2000 Hz. Because of their high sensitivity, they are frequently damped by oil filling to suppress their resonant response. While damping makes the design more rugged, changes in the temperature of the filling can effect its frequency response. When excited at its resonant frequency, the piezoresistive element can be damaged.

© 2003 by Béla Lipták

Strain-Gauge Sensors

Strain-gauge sensors are based on resistance properties of electrical conductors. If a conductor is stretched or compressed, its resistance alters due to both dimensional changes and resistance changes. This indicates that the resistivity ρ of the conductor depends on the mechanical strain applied onto it. The dependence is expressed as the gauge factor

$$\frac{dR/R}{dL/L} = 1 + 2\nu + \frac{d\rho/\rho}{dL/L} \qquad \textbf{7.22(20)}$$

where 1 indicates the resistance change due to length, 2ν indicates resistance change due to area, and $(d\rho/\rho)/(dL/L)$ indicates the resistance change due to piezoresistivity.

Strain gauge accelerometers measure a change in electrical resistance, which is in proportion to the force due to acceleration. The semiconductor strain gauge type consists of semiconductors bonded to a mass whose deformation under acceleration forces is reflected as a change of resistance. The resistance measurement is made by means of a Wheatstone bridge or half Wheatstone bridge with the elements so arranged on the mass that half of them sense tension and the other half senses compression. A bending type of accelerometer with circuit diagram is shown in Figure 7.22e.

At full-scale deflection of the beam, R_{G1} and R_{G2} are a maximum and minimum, respectively, since they are subject to equal but opposite deformations. For an initial resistance of $R_{G1} = R_{G2} = 1000\ \Omega$ and

$$\frac{\Delta R_G}{R_G} = 0.1 \qquad \textbf{7.22(21)}$$

the full-scale output is given by the relationship

$$V_O = E\left[\frac{R_{G1} + \Delta R_G}{(R_{G1} + \Delta R_G) + (R_{G2} - \Delta R_G)} - \frac{R_4}{R_3 + R_4}\right] \qquad \textbf{7.22(22)}$$

$$V_O = 10\left[\frac{1100}{2000} - \frac{1000}{2000}\right]$$

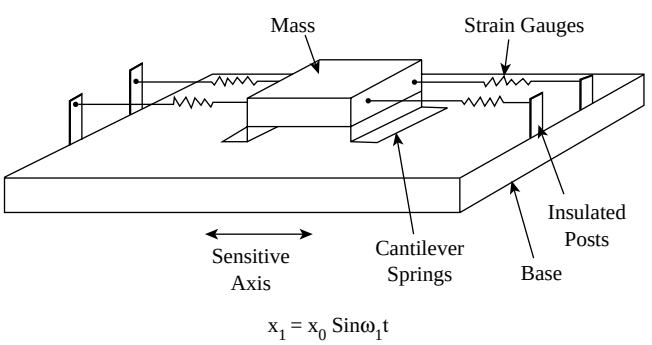

FIG. 7.22e
Strain gauge vibration sensor (acceleration sensitive).

The readout meter must have a high resistance so that for practical purposes the current flow through the meter is zero. In the above example, the accelerometer contained only two active elements. Sensitivity can be improved by the addition of two more elements to complete the Wheatstone bridge.

There are many types of strain-gauges: unbonded metal-wire gauges, bonded metal-wire gauges, bonded metal-foil gauges, vacuum-deposited thin-metal-film gauges, bonded semiconductor gauges, and diffused semiconductor gauges. However, usually bonded and unbonded metal-wire gauges find wider applications. A section of the strain-gauge accelerometers (particularly bonded semiconductor types) known as the piezoresistive transducers are used, but they suffer from high temperature sensitivities, nonlinearities, and some mounting difficulties. Nevertheless, with the recent developments of micromachine technology, these sensors have been improved considerably and are finding many new applications.

Unbonded-strain-gauge accelerometers use the strain wires as the spring element and as the motion transducer. An example of an unbonded-wire-type accelerometer is shown in Figure 7.22f. Mass *m* is attached to the base by cantilever springs, and the resistance elements are connected in the form of the Wheatstone bridge. Usually the entire assembly is contained in an oil-filled case for viscous damping. They are useful for general-purpose motion and vibration measurements from low to medium frequencies. They are available in wide ranges and characteristics: typically ±5 to ±200 *g* full scale, a natural frequency of 17 to 800 Hz, a 10 V excitation voltage AC or DC, full scale output ±20 to ±50 mV, a resolution less than 0.1%, an inaccuracy less than 1% full scale, and a cross-axis sensitivity less than 2%. The damping

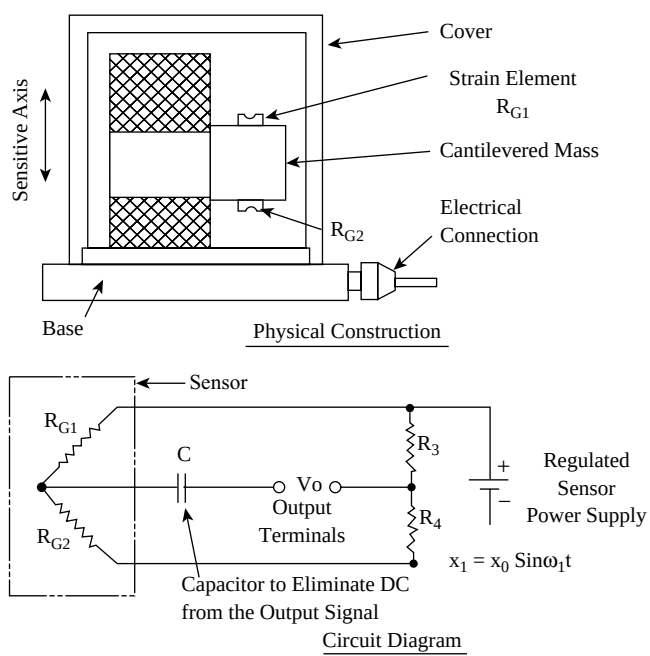

FIG. 7.22f
Bending-type vibration sensor (acceleration sensitive).

© 2003 by Béla Lipták

ratio (using silicone oil damping) is 0.6 to 0.8 at room temperature. These instruments are small and light, usually with a mass less than 25 g.

Bonded-strain-gauge accelerometers generally use a mass supported by a thin flexure beam. The strain gauges are cemented onto the beam to achieve maximum sensitivity, temperature compensation, and sensitivity to both cross-axis and angular accelerations. Their characteristics are similar to the unbonded-strain-gauge accelerometers but have greater sizes and weights. Often silicone oil is used for damping. Semiconductor strain gauges are widely used as strain sensors in cantilever-beam and mass types of accelerometers. They allow high outputs (0.2 to 0.5 V full scale). Typically, a ±25 *g* acceleration unit has a flat response from 0 to 750 Hz, a damping ratio of 0.7, a mass of about 28 g, and an operational temperature of −18 to 93°C. A triaxial ±20,000 *g* model has a flat response from 0 to 15 kHz, a damping ratio of 0.01, and a compensation temperature range of 0 to 45°C, and is $13 \times 10 \times 13$ mm^3 in size and 10 g in mass.

ELECTROMECHANICAL SENSORS

Electromechanical acceleration and vibration sensors, essentially servo or null-balance types, rely on the principle of feedback. In these instruments, an acceleration-sensitive mass is kept very close to a neutral position or zero displacement point by sensing the displacement and feeding back the effect of this displacement. A proportional magnetic force is generated to oppose the motion of the mass displaced from the neutral position, restoring this position just as a mechanical spring in a conventional accelerometer would do. The advantages of this approach are better linearity and elimination of hysteresis effects as compared to the mechanical springs. Also, in some cases, electrical damping can be provided, which is much less sensitive to temperature variations.

One very important feature of electromechanical accelerometers is the capability of testing the static and dynamic performances of the devices by introducing electrically excited test forces into the system. This remote self-checking feature can be quite convenient in complex and expensive tests where accuracy is essential. These instruments are also useful in acceleration control systems, since the reference value of acceleration can be introduced by means of a proportional current from an external source. They are used for general-purpose motion measurements and monitoring low-frequency vibrations.

There are a number of different electromechanical accelerometers, including coil-and-magnetic types, induction types, and others.

Coil-and-Magnetic Accelerometers

These accelerometers are based on Ampere's law, that is, "a current-carrying conductor disposed within a magnetic field experiences a force proportional to the current, the length of the conductor within the field, the magnetic field density, and the sine of the angle between the conductor and the field."

The coils of these accelerometers are located within the cylindrical gap defined by a permanent magnet and a cylindrical soft iron flux return path. They are mounted by means of an arm situated on a minimum friction bearing or flexure so as to constitute an acceleration-sensitive seismic mass. A pickoff mechanism senses the displacement of the coil under acceleration and causes the coil to be supplied with a direct current via a suitable servo controller to restore or maintain a null condition. The electrical currents in the restoring circuit is linearly proportional to acceleration, provided (1) armature reaction affects are negligible and fully neutralized by a compensating coil in opposition to the moving coil, and (2) the gain of the servo system is large enough to prevent displacement of the coil from the region in which the magnetic field is constant.

In these accelerometers, the magnetic structure must be shielded adequately to make the system insensitive to external disturbances or the earth's magnetic field. Also, in the presence of acceleration there will be a temperature rise due to i^2R losses. The effects of these i^2R losses on the performance are determined by the thermal design and heat-transfer properties of the accelerometers.

Induction Accelerometers

The cross-product relationship of current, magnetic field, and force is the basis for induction-type electromagnetic accelerometers. These accelerometers are essentially generators rather than motors. One type of instrument, the cup-and-magnet design, includes a pendulous element with a pickoff mechanism and a servo controller driving a tachometer coupling. A permanent magnet and a flux return ring, closely spaced with respect to an electrically conductive cylinder, are attached to the pendulous element. A rate-proportional drag force is obtained by the electromagnetic induction effect between the magnet and the conductor. The pickoff mechanism senses pendulum deflection under acceleration and causes the servo controller to turn the rotor in a sense to drag the pendulous element toward the null position. Under steady-state conditions motor speed is a measure of the acceleration acting on the instrument. Stable servo operation is achieved by employing a time-lead network to compensate the inertial time lag of the motor and magnet combination. The accuracy of the servo-type accelerometers is ultimately limited by consistency and stability of scale factors of coupling and cup-and-magnet devices as a function of time and temperature.

Another accelerometer based on induction design uses the eddy-current induction torque generation. The force-generating mechanism of an induction accelerometer consists of a stable magnetic field, usually supplied by a permanent magnet, which penetrates orthogonally through a uniform conduction sheet. The movement of the conducting sheet relative to the magnetic field in response to acceleration results in a generated

© 2003 by Béla Lipták

electromotive potential in each circuit in the conductor. This action is in accordance with the Faraday's principle. In induction-type accelerometers, the induced eddy currents are confined to the conductor sheet, making the system essentially a drag coupling. Since angular rate is proportional to acceleration, angular position represents change in velocity. This is a useful feature particularly in navigation applications.

A typical commercial instrument based on the servo-accelerometer principle might have a micromachined quartz flexure suspension, differential capacitance angle pickoff, air squeeze film plus servo lead compensation for system damping. Of the various available models, as an example, a typical 30-*g* unit has a threshold and resolution of 1 μg, a frequency response that is flat to within 0.05% at 10 Hz and 2% at 100 Hz, a natural frequency of 1,500 Hz, a damping ratio from 0.3 to 0.8, and transverse or cross-axis sensitivity of 0.1%. If, for example, the output current were about 1.3 mA/*g*, a 250 Ω readout resistor would give about ±10 V full scale at 30 *g*. These accelerometers are good for precision work and used in many applications such as aircraft and missile control systems, measurement of tilt angles for borehole navigation, and axle angular bending in aircraft weight and balance systems.

CAPACITIVE AND ELECTROSTATIC SENSORS

Capacitive and electrostatic sensors are based on Coulomb's law between two charged electrodes; therefore, they are capacitive types. Depending on the operation principles and external circuits, they can be broadly classified as electrostatic-force-feedback accelerometers or capacitive accelerometers.

Electrostatic-Force-Feedback Accelerometers

An electrostatic-force-feedback accelerometer consists of an electrode, with mass *m* and area *S*, mounted on a light pivoted arm that moves relative to some fixed electrodes. The nominal gap *h* between the pivoted and fixed electrodes is maintained by means of a force-balancing servo system, which is capable of varying the electrode potential in response to signals from a pickoff mechanism that senses relative changes in the gaps. Mathematically, the field between the electrodes may be expressed by

$$E = \frac{Q}{\varepsilon k S} \qquad \textbf{7.22(23)}$$

where E is the intensity or potential gradient (dV/dx), Q is the charge, S is the area of the conductor, and k is the dielectric constant of the space outside the conductor.

From this expression, it can be shown that the force per unit area of the charged conductor (in N/m^2) is given by

$$\frac{F}{S} = \frac{Q^2}{2\varepsilon k S^2} = \frac{\varepsilon k E^2}{2} \qquad \textbf{7.22(24)}$$

Considering one movable and one stationary electrodes and assuming that the movable electrode is maintained at a bias potential V_1 and the stationary one at a potential V_2. The electrical intensity E in the gap can be expressed as

$$E_1 = \frac{V_1 - V_2}{h} \qquad \textbf{7.22(25)}$$

so that the force of attraction may be found as

$$F_1 = \frac{\varepsilon k E^2 S}{2h^2} = \frac{\varepsilon k (V_1 - V_2)^2 S}{2h^2} \qquad \textbf{7.22(26)}$$

In the presence of acceleration, if V_2 is adjusted to restrain the movable electrode to the null position, the expression relating acceleration and electrical potential may be given by

$$a = \frac{F_1}{m} = \frac{\varepsilon k (V_1 - V_2)^2 S}{2h^2 m} \qquad \textbf{7.22(27)}$$

The device so far described can measure acceleration in one direction only, and the output is quadratic character, that is,

$$(V_1 - V_2) = D\sqrt{a} \qquad \textbf{7.22(28)}$$

where D is the constant of proportionality.

The output may be linearized in a number of ways, one of which is the quarter-square method. If the servo controller applies a potential $-V_2$ to the other fixed electrode, the force of attraction between this electrode and the movable electrode becomes

$$a = \frac{F_2}{m} = \frac{\varepsilon k (V_1 + V_2)^2 S}{2h^2 m} \qquad \textbf{7.22(29)}$$

and the force-balance equation of the movable electrode when the instrument experiences a downward acceleration a now is

$$ma = F_2 - F_1 = \frac{\varepsilon k S\left[(V_1 + V_2)^2 - (V_1 - V_2)^2\right]}{2h^2}$$

or

$$ma = F_2 - F_1 = \frac{2\varepsilon k S V_1 V_2}{h^2} \qquad \textbf{7.22(30)}$$

Hence, if the bias potential V_1 is held constant and the gains of the control loop are high so that variations in the gap are negligible, the acceleration becomes a linear function of the controller output voltage V_2.

© 2003 by Béla Lipták

The principal difficulty in mechanizing the electrostatic force accelerometer is the relatively high electric field intensity required to obtain an adequate force. Damping can be provided electrically or by viscosity of the gaseous atmosphere in the interelectrode space if the gap h is sufficiently small. The scheme works best with micromachined instruments. Nonlinearity in the voltage breakdown phenomenon permits larger gradients in very small gaps.

The main advantages of electrostatic accelerometers are their extreme mechanical simplicity, low power requirements, absence of inherent sources of hysteresis errors, zero temperature coefficients, and ease of shielding from stray fields.

Capacitive Accelerometers

There are various types of capacitive accelerometers. The differential-capacitance accelerometers are based on the principle of the change of capacitance in proportion to applied acceleration. In one type, the seismic mass of the accelerometer is made as the movable element of an electrical oscillator as shown in Figure 7.22g. The seismic mass is supported by a resilient parallel-motion beam arrangement from the base. The system is set to have a certain defined nominal frequency when undisturbed. If the instrument is accelerated, the frequency varies above and below the nominal value depending on the direction of acceleration.

The seismic mass carries an electrode located in opposition to a number of base-fixed electrodes that define variable capacitors. The base-fixed electrodes are resistances coupled in the feedback path of a wide-band, phase-inverting amplifier. The gain of the amplifier is predetermined to ensure maintenance of oscillations over the range of variation of the capacitance determined by the applied acceleration. The

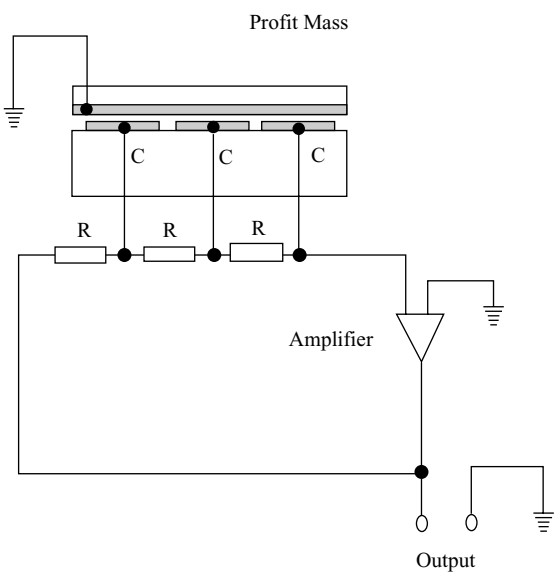

FIG. 7.22g
A differential-capacitance-type accelerometer.

value of the capacitance C for each of the variable capacitors is given by

$$C = \frac{\varepsilon k S}{h} \qquad \textbf{7.22(31)}$$

where k is the dielectric constant, ε is the permittivity of free space, S is the area of electrode, and h is the variable gap.

Denoting the magnitude of the gap for zero acceleration as h_0, the value of h in the presence of acceleration a may be written

$$h = h_0 + \frac{ma}{K} \qquad \textbf{7.22(32)}$$

where m is the value of the proof mass and K is the spring constant. Thus,

$$C = \frac{\varepsilon k S}{h_0 + (ma/K)} \qquad \textbf{7.22(33)}$$

For example, the frequency of oscillation of the resistance-capacitance type circuit is given by the expression

$$f = \frac{\sqrt{6}}{2\pi RC} \qquad \textbf{7.22(34)}$$

Substituting this value of C in Eq. 2.23(34) gives

$$f = \frac{\sqrt{6}[h_0 + (ma/K)]}{2\pi R\varepsilon k S} \qquad \textbf{7.22(35)}$$

Denote the constant quantity $\sqrt{6}/2\pi R\varepsilon k S$ as B and rewrite the Equation 7.22(35) as

$$f = Bh_0 + \frac{Bma}{K} \qquad \textbf{7.22(36)}$$

The first term on the right-hand side expresses the fixed bias frequency f_0 and the second term denotes the change in frequency resulting from acceleration, so that the expression may be written as

$$f = f_0 + f_a \qquad \textbf{7.22(37)}$$

If the output frequency is compared with an independent source of a constant frequency of f_0, the f_a can be determined easily.

A commonly used example of a capacitive-type accelerometer is based on a thin diaphragm with spiral flexures that provide the spring, proof mass, and moving plate necessary for the differential capacitor. Plate motion between the electrodes pumps air parallel to the plate surface and through holes in the plate to provide squeeze film damping. Since air

© 2003 by Béla Lipták

viscosity is less temperature sensitive than oil, the desired damping ratio of 0.7 hardly changes more than 15%. Families of such instruments are easily available with full-scale ranges from ±0.2 *g* (4 Hz flat response) to ±1000 *g* (3000 Hz), a cross-axis sensitivity less than 1%, and a full-scale output of ±1.5 V. The size of a typical device is about 25 mm^3 with a mass of 50 g.

MICRO- AND NANOSENSORS

By the end of the 1970s, it became apparent that the essentially planar processing integrated-circuit (IC) technology could be modified to fabricate three-dimensional electromechanical structures by the micromachining process. Accelerometers and pressure sensors were among the first IC sensors. The first accelerometer was developed in 1979. Since then, the technology has been progressing steadily and now an extremely diverse range of accelerometers are readily available. Most sensors use bulk micromachining, rather than surface micromachining techniques. In bulk micromachining, the flexures, resonant beams, and all other critical components of the accelerometer are made from bulk silicon in order to exploit the full mechanical properties of silicon crystals. With proper design and film process, bulk micromachining yields an extremely stable and robust accelerometer.

The selective etching of multiple layers of deposited thin films, or surface micromachining, allows movable microstructures to be fabricated on silicon wafers. With surface micromachining, layers of structure material are disposed and patterned as shown in Figure 7.22h. These structures are formed by polysilicons and sacrificial materials such as silicon dioxides. The sacrificial material acts as an intermediate spacer layer and is etched away to produce a freestanding structure. Surface machining technology also allows smaller and more complex structures to be built in multiple layers on a single substrate. A typical example of a modern micromachined accelerometer is given in Figure 7.22i. Multiple accelerometers can be mounted on a single chip, sensing accelerations in *x*, *y*, and *z* directions. The primary signal conditioning is also provided in the same chip. The output from the chip is usually read in the digital form.

The operational principles of microaccelerometers are very similar to capacitive force-balance or vibrating-beam accelerometers, discussed earlier. Manufacturing techniques may change from one manufacturer to another. However, in general, vibrating-beam accelerometers are preferred because of better air-gap properties and improved bias performance characteristics.

Vibrating-beam accelerometers, also termed resonant-beam force transducers, are made in such a way that an acceleration along a positive input axis places the vibrating beam in tension. Thus the resonant frequency of the vibrating beam increases or decreases with the applied acceleration.

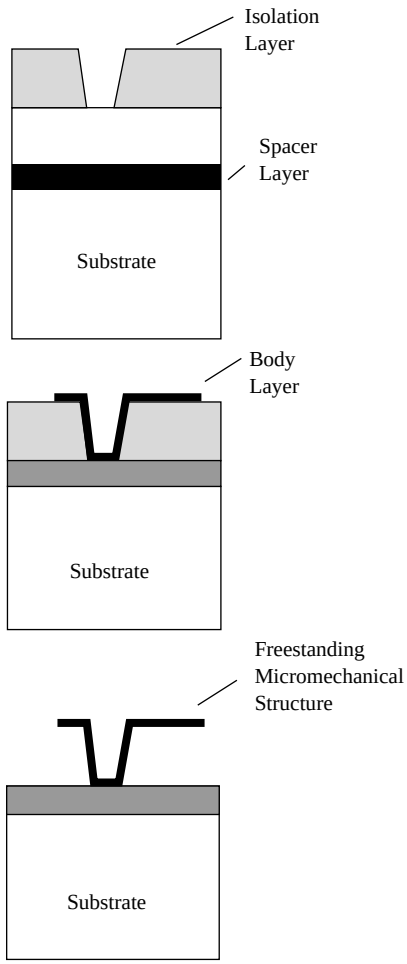

FIG. 7.22h
Steps of micromachining to manufacture micro and nano accelerometers.

In double-end tuning fork (DETF) accelerometers, an electronic oscillator capacitively couples energy into two vibrating beams to keep them oscillating at their resonant frequency. The beams vibrate 180° out of phase to cancel reaction forces at the ends. The dynamic cancellation effect of the DETF design prevents energy from being lost through the ends of the beam. Hence, the dynamically balanced DETF resonator has a high *Q* factor, which leads to a stable oscillator circuit. The acceleration signal is output from the oscillator as a frequency-modulated square wave that can be used for a digital interface.

The frequency of resonance of the system must be much higher than any input acceleration, and this limits the measurable range. In a micromachined accelerometer, used in military applications, the following characteristics are given: a range of ±1,200 *g*, a sensitivity of 1.11 Hz/*g*, a bandwidth of 2,500 Hz, and an unloaded DETF frequency of 9,952 Hz. The frequency at +1,200 *g* is 11,221 Hz, the frequency at –1,200 *g* is 8,544 Hz, and the temperature sensitivity is 5 m*g*/°C. The accelerometer size is 6 mm diameter by 4.3 mm length, with a mass of about 9 g. It has a turn on time less

© 2003 by Béla Lipták

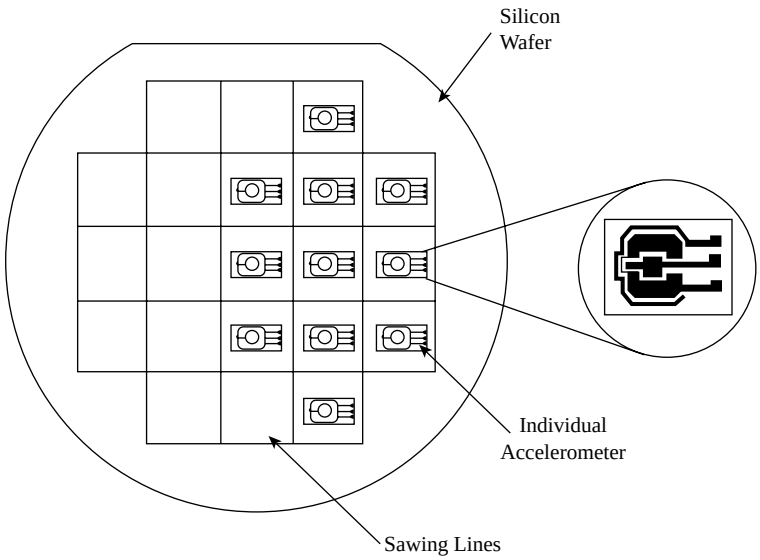

FIG. 7.22i
Multiple accelerometers in a single chip.

then 60 s, the accelerometer is powered with +9 to +16 V DC, and the nominal output is 9,000 Hz square wave.

Surface micromachining has also been used to manufacture specific application accelerometers, such as air-bag applications in the automotive industry. In one type, a three-layer differential capacitor is created by alternate layers of polysilicon and phosphosilicate glass on a 0.38 mm thick, 100 mm long wafer. A silicon wafer serves as the substrate for the mechanical structure. The trampoline-shaped middle layer is suspended by four supporting arms. This movable structure is the seismic mass for the accelerometer. The upper and lower polysilicon layers are fixed plates for the differential capacitors. The glass is sacrificially etched by hydrofluoric acid.

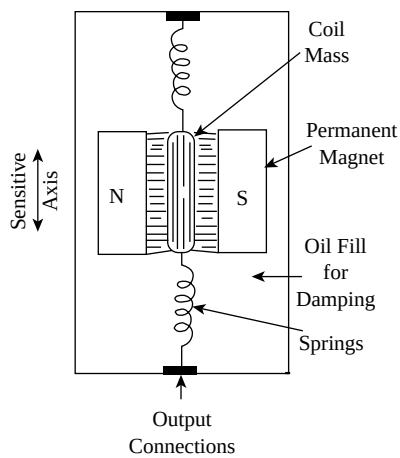

FIG. 7.22j
Schematic representation of a velocity sensor.

VELOCITY SENSORS

Acceleration is the time differential of velocity and can be measured by using velocity sensors. A typical velocity sensor consists of a housing that is attached to the vibrating surface and a magnetic core suspended inside it. Relative motion between the two induces a voltage that is proportional to velocity. The advantages of this sensor include its self-generating nature, strong output signal (250 mV/in./sec), insensitivity to mounting or torque, and low noise pickup due to its low impedance. Its disadvantages are its relatively large size and mass, inability to be suitable for frequencies below 10 Hz, and low output signals at frequencies above 1000 Hz.

Velocity sensors consist of an electrical coil suspended by a spring or springs in the field of a permanent magnet as in Figure 7.22j. The entire assembly may be contained in silicone oil, or, for low-mass coils, the reactive forces caused by the induced currents can be used for damping. The spring coil mass system has a natural frequency below, and the coil moves with the enclosure. Above the natural frequency, the coil remains stationary, and the relative motion between coil and magnet induces a voltage in the coil. This voltage has an amplitude in proportion to the vibration velocity and a frequency equal to the frequency of vibration. With velocity pickup, the output can be in the form of mils (thousandths of an inch) displacement by integration of velocity. A control unit mounted separately is required for these pickups; it contains the readout, amplifier, and power supply. Electronic filtering can be provided where it is desired to look at only specific frequency bands. These devices are fairly rugged, but the oil-damped types are temperature-sensitive because of viscosity changes of the filling oil.

© 2003 by Béla Lipták

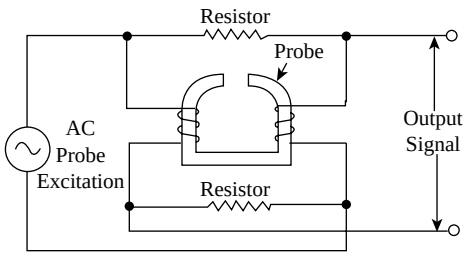

FIG. 7.22k
Eddy current probe schematic.

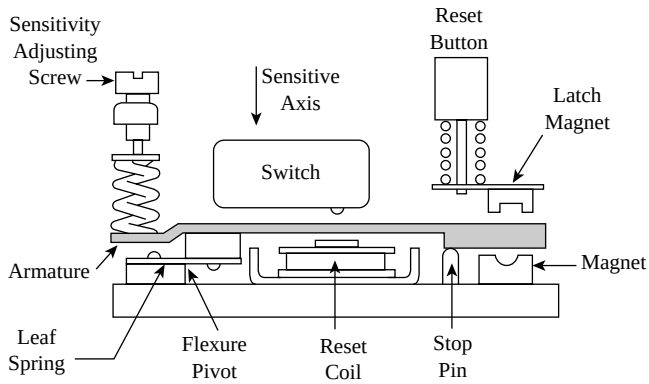

FIG. 7.22l
Mechanical-magnetic switch.

NONCONTACT OR PROXIMITY SENSORS

As the proximity detectors measure the distance between objects, they can also be used to measure the frequency and amplitude of vibrations. Several proximity sensor principles can be used. The advantage of capacitance types is their simplicity and low temperature sensitivity. Potentiometric units have the advantage of accommodating large amplitudes of movement and strong outputs, while their disadvantage is their low natural frequency. LVDTs and variable inductance units are used in telemetry.

To detect the proximity of conducting materials, an eddy current probe can be used. The schematic arrangement of such a probe is shown in Figure 7.22k. Two identical coils are wound on the probe, and these, together with the resistances, complete a bridge circuit. With no conducting surface near the probe, the bridge is in balance. When a conducting object is brought near the probe, the bridge becomes unbalanced and the output signal is in proportion to the proximity of the object. The excitation is a high-frequency signal, which induces eddy currents in the test object. These currents produce losses in the bridge circuit in such a way that bridge imbalance is related to the proximity of the object. The output signal amplitude is related to the vibration or displacement amplitude, and the frequency of amplitude variations is the frequency of vibration. The bridge is powered by a high-frequency (100 kHz to 2 MHz) oscillator that supplies the rapidly changing magnetic field required for sensor operation.

MECHANICAL-MAGNETIC SWITCHES

The detector mechanism of this switch consists of an armature suspended on a flexure pivot and restrained from moving by a permanent magnet as shown in Figure 7.22l. A compression spring provides an adjustable force opposing the magnet. The armature acts as a lever where the adjusting spring force is balanced by the magnetic force. The armature is constrained to move in only one plane by the flexure pivot. When the entire assembly is subjected to vibration perpendicular to the base, the product of acceleration and armature mass produces an inertial force trying to pull the armature away from the magnet. Since the spring force aids the inertial force, the spring loading is selected to trip the mechanism at the desired acceleration. When the peak acceleration exceeds the preset level, the armature leaves the stop pin and moves to the latch magnet, which holds the armature in the excessive vibration position. Motion of the armature actuates a snap acting switch that opens or closes an electrical circuit. Once the switch has been tripped by excessive vibration, the armature must be returned to the stop pin. Resetting can be accomplished remotely by energizing the reset coil momentarily or by depressing the reset button mounted on the switch. The reset coil requires direct current for operation. If DC power is not available, a rectifier can be supplied with the switch. The rectifier output is sufficient to power several reset coils.

OPTICAL SENSORS

Optical sensors are often used in industrial and laboratory environment for displacement, vibration, and acceleration sensing. They are mainly noncontact devices and are applied where precision is necessary, but they tend to be more expensive than the other devices. There are many different techniques available to suit a particular application. They can broadly be classified as fiber optic sensors, laser optic, interferometric sensors, time-of-flight sensors, Doppler-effect sensors, encoders, and digital displacement sensors. Further, there are many different types in each class. For example, the interferometric sensors include the optical fiber, laser, holographic, and monochromatic light types. In these sensors, Michelson, Sagnac, or Fizeau effects of interference of two or more light beams is used by suitable optical arrangements. The most commonly used optical arrangements are beam splitters, polarizing prisms, and diffraction gratings. Some of these include fringe counting inteferometers, frequency modulation inteferometers, heterodyne interferometers, phase-locked interferometers, laser Doppler and laser feedback interferometers, and fiber interferometers.

© 2003 by Béla Lipták

CONCLUSIONS

Acceleration, vibration, and shock measurements are very important in all types of industry. Because of the vast market, there are many vendors producing sensors and devices for these measurements. Also, there are many different types. The mechanical sensors are limited to detection of lower frequencies of vibrations. Output signals for waveform analysis are not available with these units. They are used as trip devices to shut down equipment or an alarm on excessive vibration. If vibration sensing is for the purpose of detecting impending malfunction, devices with continuous outputs are required. PZT and peizoresistive acceleration sensors are commonly used for their ruggedness and compactness and their suitability in high frequency applications. Today, mass produced micro- and nano-accelerometers are gaining popularity because of the price, small size, and ease in signal processing requirements. Velocity sensors, however, offer a direct measurement of the energy dissipated in vibration, and thus indicate a quantity directly related to efficiency and the destructive forces.

Reference

1. McConnell, K.G., *Vibration Testing: Theory and Practice*, New York: John Wiley & Sons, 1995.

Bibliography

"Accelerometer/Vibration," *Measurements and Control*, December 1993.

Bentley, J.P., *Principles of Measurement Systems*, 2nd ed., Burnt Mill, UK: Longman Scientific and Technical, 1988.

Doebelin, E.O., *Measurement Systems: Application and Design*, 4th ed., Singapore: McGraw-Hill, 1990.

Frank, R., *Understanding Smart Sensors*, Boston: Artech House Inc., 1996.

Eren, H., "Accelerometers," in *Wiley Encyclopedia of Electrical Engineering*, Vol. 1, Webster, J.G., Ed., New York: Wiley Interscience,1999, pp. 37–54.

Eren, H., "Acceleration Measurements," in *Mechatronics Engineers Handbook*, Bishop, R.H., Ed., Boca Raton, FL: CRC Press, 2001, pp. 19.12–19.33.

Holman, J.P., *Experimental Methods for Engineers*, 5th ed., Singapore: McGraw-Hill, 1989.

Lawrance, A., *Modern Inertial Technology: Navigation, Guidance, and Control*, New York: Springer-Verlag, 1993.

McConnell, K.G., *Vibration Testing: Theory and Practice*, New York: John Wiley & Sons, 1995.

Machine Vibration: Dynamics and Control, London: Springer, 1992–1996.

Sydenham, P.H., Hancock, N.H., and Thorn, R., *Introduction to Measurement Science and Engineering*, New York: John Wiley & Sons, 1989.

Tompkins, W.J. and Webster, J.G., *Interfacing Sensors to the IBM PC*, Englewood Cliffs, NJ: Prentice-Hall, 1988.

Wadi, I., "Emergency Shutdown Systems," *Control Engineering*, March 1991.

© 2003 by Béla Lipták

7.23 Weather Stations

B. G. LIPTÁK (1982, 1995, 2003)

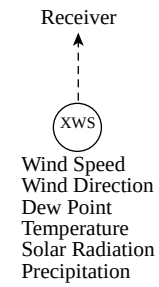

Flow Sheet Symbol

Variable Ranges:

Barometric pressure: 28 to 32 in. Hg (95 to 108 kPa)
Dew point: –40 to 120°F (–40 to 50°C)
Precipitation: Each tip of bucket is 0.01 in. (0.25 mm)
Relative humidity: 0 to 100% RH
Solar radiation: 75 mV/cal/(cm^2/min)
Temperature: –30 to 120°F (–34 to 50°C)
Wind direction: 0 to 360°
Wind speed: 0.5 to 125 mph (0.2 to 56 m/s)
Wind chill: –125 to 85°F (–87 to 28°C)

Inaccuracies:

Barometric pressure: From ±0.08% of reading to ±0.5% full scale or ±2.5 mmHg
Dew point: From ±0.6°F (±0.3°C)
Precipitation: 0.5% at 0.5 in./hr or ±1% or ±0.01 in. (±0.25 mm)
Relative humidity: ±3% midscale
Solar radiation: ±1 to 2%
Dry bulb temperature: ±0.1°F (±0.05°C)
Wind direction: ±2.5° to ±5° or 0.5% linearity
Wind speed: From ±1% or ±0.15 mph to ±2% or ±0.4 mph (±0.2 m/s)
Wind chill: ±2°F (±1°C)

Costs:

A visually observed rain gauge costs $50; a dial barometer with built-in thermometer costs $200; a recording barometer costs $700; a digital barometer with three capacitive aneroid pressure sensors costs about $2000; a combination humidity-temperature sensor costs $600, with a solar radiation shield costing an additional $300; a barometric pressure transmitter costs $900; an anemometer for wind speed measurement costs $500 (see Section 2.2 for details); a wind vane for wind direction sensing costs $700; a 30 ft (10 m) pole mast costs $2000; an analog wind display costs $800; a computer-compatible digital weather display station for optical sensing of seven weather parameters costs $1500 (a printer costs an additional $1000); a chilled-mirror-type dew-point transmitter with digital resistance temperature detectors costs $4000 to $5000; a complete industrial weather station including solar radiation sensing and dual channel recording costs from $10,000 to $20,000

Partial List of Suppliers:

Climatronics Corp. (www.climatronics.com)
Coastal Environmental System (www.coastalenvironmental.com)
Cole Parmer Instrument Co. (www.coleparmer.com)
Davis Vantage Pro (www.weatherstations.co.uk)
Environmental Dynamics Research Inc. (www.edrinc.com)
Met One Inc. (www.metone.com)
Vaisala Inc. (www.vaisala.com)

© 2003 by Béla Lipták

Weather Measure Corp. (www.logger.fsec.ucf.edu)
Weksler Instruments Corp. (www.dresserinstruments.com)
R.M. Young Co. (www.coastalenvironmental.com)

INTRODUCTION

A typical weather station includes a supporting frame with a number of sensors mounted on it: transmitters, cables, and remote readout devices. All of this equipment can be purchased as a package or separately. In larger installations, the weather information is usually sent to the central computer, and no separate readout devices are required for the weather station.

Many of the sensors that are used in weather stations have already been discussed in other parts of this handbook. Therefore, the emphasis here will be placed on the detectors that are not covered elsewhere.

METEOROLOGICAL STATION

While each station is different, it is useful to briefly describe one. The one selected for description is the Florida Solar Energy Center (FSEC) because their information is in the public domain.

In the FSEC installation, the solar radiation related data (horizontal solar radiation, total radiation, direct normal radiation, total horizontal infrared sky radiation) are collected on the roof, and only the meteorological measurements are made at the weather station. FSEC has over 40 solar radiation instruments. All solar radiation sensors (precision spectral pyranometer and the normal incident pyrheliometer [NIP]) are calibrated annually.

Table 7.23a provides a summary of the data being collected at a field test site. Dry-bulb, dew point, and barometric pressure are recorded once every 6 min. Precipitation is summed continuously and the total in every 6-min period is recorded. The other measurements are made once every second and a 6-min average is recorded. The dry-bulb temperature sensor is mounted in a motor aspirated radiation shield. The barometric pressure sensor is located 17 ft above mean sea level. The precipitation gage is protected by an alter type wind screen. All sensors and translators are calibrated at least annually.

TABLE 7.23a
*The Sensors Used at the Florida Solar Energy Center Field Test Site and Their Inaccuracies**

Parameter	*Sensor*	*Inaccuracy*
Wind speed	3-cup anemometer photon coupled chopper 0.5 mph threshold	±0.15 mph or 1%
Wind direction	Lightweight vane low torque potentiometer 0.5 mph threshold	0.5% linearity
Dry-bulb temperature	Platinum resistance thermometer	±0.1°C
Dew point temperature	Chilled mirror system with platinum resistance thermometer	±0.3°C
Barometric pressure	Piesoresistive element	0.08% of reading
Precipitation	Tipping bucket 0.01 in. resolution	0.5% at 0.5 in./hr

* Courtesy of FSEC

SOLAR RADIATION MEASUREMENT

The intensity of solar radiation can be measured by (1) absorbing the incoming radiation and determining the rate of heat absorption, and (2) making use of photovoltaic or photoresistive transducers. Among the first accurate measurements of solar radiation were those made with miniature water-flow calorimeters in which the flow rate was kept constant and the temperature rise due to absorption of solar radiation was determined by gh-accuracy mercury-in-glass thermometers and later by thermopiles.

Historical Background

C.S.M. Pouillet of France (1830) and J. Ericsson of the United States (1870) devised pyrheliometers that measured the rate of temperature rise of blackened metal masses located at the bottom of tubes that excluded all but the direct rays of the sun. C.G. Abbott of the Smithsonian Institution perfected this technique with his silver-disk pyrheliometers, which are still in use as secondary standards.

He had earlier built a waterflow calorimeter in which a precisely controlled flow of distilled water carried away the heat absorbed by a blackened cone located at the bottom of a collimating tube. A platinum-resistance thermometer was used to measure the temperature rise and then an exactly equal rise was created by passing the water through an electrical heating coil. Precise measurement of the heating current and the coil resistance enabled the user of the instrument to make first-order determinations of the rate at which the incoming solar energy was being absorbed. This instrument was long used as the primary standard for measuring solar radiation.

The inventor of the primary standard radiometer used today was K.J. Angström of Sweden. His instrument, invented in 1899, uses two blackened strips of manganin, each of which can be heated either electrically or by the rays of the sun. The measurement is made by exposing one strip to the sun, and then measuring the current required to heat the adjacent strip to exactly the same temperature. By reversing the operation of the strips several times, an average value of the radiation intensity within 1% of the absolute value can be obtained. The results may be expressed in langleys

© 2003 by Béla Lipták

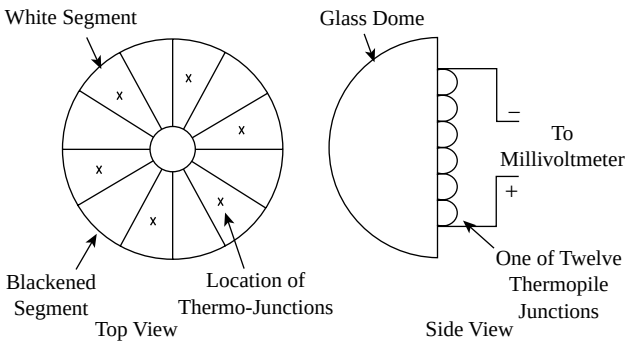

FIG. 7.23b
Thermopile-type pyranometer.

(1 ly = 1.0 g-cal/cm^2/min = 221.2 Btu/hr/ft^2) or in electrical units (1 ly = 69.7 mW/cm^2).

Multijunction Thermopile

One of the solar radiometers in use today employs a multijunction thermopile to detect the difference in temperature between whitened and blackened segments of divided or concentric circles (Figure 7.23b), which are generally protected by hemispherical glass domes. These instruments characteristically produce from 2.0 to 10.0 mV/ly of incoming radiation, and their output can be readily measured with indicating or recording millivoltmeters.

Mechanical or electrical integrators can be used to total daily or monthly solar radiation. Since the response of the thermopile instruments is independent of wavelengths, they can be used with filters to determine radiation intensity in selected portions of the solar or longwave spectrums.

Photovoltaic Cells

This solar radiometer uses silicon photovoltaic cells that produce a short-circuit current that is directly in proportion to the intensity of the solar radiation falling on them. Widely used in the space program to provide power for space probes and satellites, silicon cells are rugged, sensitive, and capable of producing currents large enough to operate self-powered integrators.

Thermal Radiometers

The instrument used to measure solar radiation is called a pyranometer. It consists of a blackened disk containing temperature-measuring sensors. The disk is protected from the environment by two domes of glass. When exposed to the sun, the disk heats up. The glass domes prevent cooling by the wind. The temperature of the disk is a function of the amount of solar radiation hitting it. Calibration against more sophisticated radiation measuring devices gives a repeatable multiplier to convert the pyranometer's output to units of solar radiation.

The term *pyranometer* is applied to a solar radiometer that measures the shortwave radiation coming directly from the sun and diffusely from all parts of the sky. *Pyrheliometer* is the word used to identify an instrument that measures only the direct radiation from the solar disk itself.

Pyrheliometers

Direct or normal solar radiation is coming directly from the sun without bouncing off clouds or the atmosphere. Concentrating solar collectors utilize only this part of the total solar radiation. Its measurement gives an indication of the clearness of the sky. The NIP measures this form of radiation. It consists of a long tube, which, when placed over a pyranometer, blocks out all solar radiation except that which is coming directly from the sun. A tracker, called the equatorial mount, is used to keep the NIP pointed at the sun. The total solar radiation is also measured by a pyranometer, which is also mounted on the tracker. The difference between the NIP and the total pyranometer is referred to as the diffuse solar radiation.

WIND DIRECTION AND SPEED

The wind direction and wind speed transmitters can be either separate units or combined into a single assembly, as shown in Figure 7.23c. Wind speed and direction are measured at a height of 10 m above the ground. This is the standard height for meteorological wind measurements. A special photochopper design is used in the anemometer (wind speed) to enable it to measure wind as slow as 0.2 m/s (1/2 mph). For an in-depth discussion of anemometers, refer to Section 2.2.

Wind Direction

The wind direction is usually detected by a potentiometer, which is mechanically coupled to the wind vane shaft. The resistance at the potentiometer wiper contact is directly in proportion to the angular position of the vane.

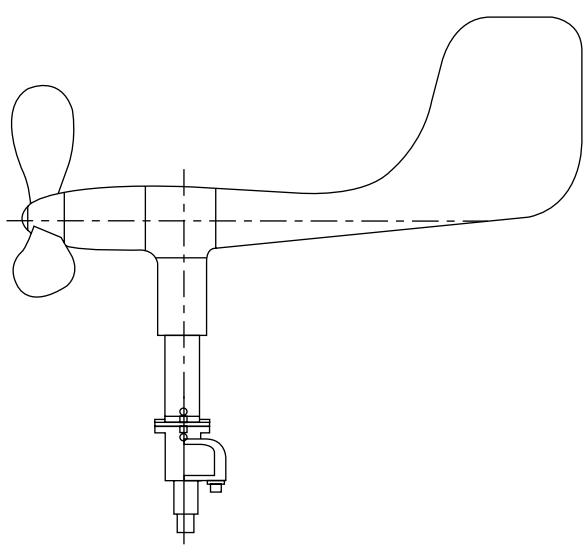

FIG. 7.23c
Wind direction and speed transmitter.

© 2003 by Béla Lipták

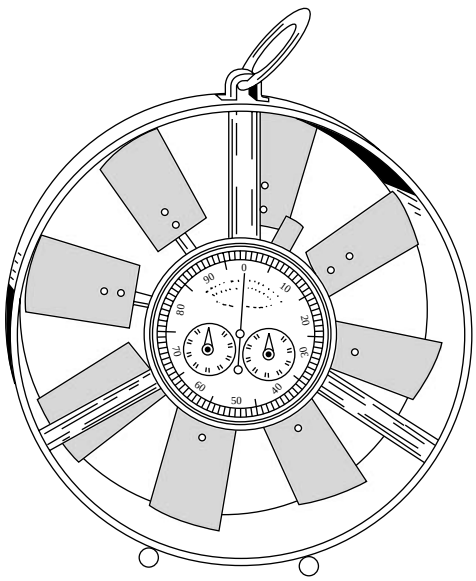

FIG. 7.23d
Vane anemometer with local readout.

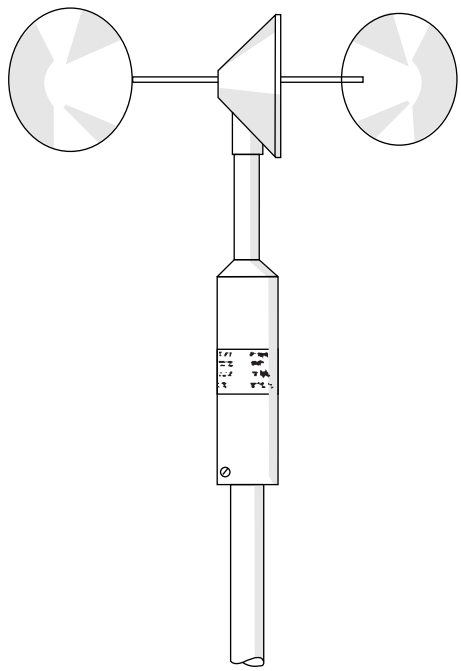

FIG. 7.23e
Three-cup anemometer.

Wind Speed

Wind speed is sensed by three- or six-bladed impellers or by anemometers of three- or six-cup configurations. The anemometer shaft can be connected to a photochopper or to a DC or AC generator. If it is connected to the photochopper, a 60-slot disk is rotated to interrupt a light beam with a photosensitive transistor on the opposite side of the disk. This design is more maintenance-free than the DC-type tachometer generators, which require brush contacts for their operation. The contact between rotating and stationary components can also be eliminated through the use of AC generators. Transmitters are usually selected to be sensitive to light winds and yet be strong enough to withstand winds of hurricane force.

Figure 7.23d illustrates the vane design. Air flow causes the vanes to rotate with an angular velocity that is proportional to the wind speed. When a portable unit is required or when the local readout is satisfactory, vane velocity is sent to a local indicator through a gear and spring assembly. When remote readouts are required, a magnetic or capacitive coupling is used to generate a transmission signal.

Figure 7.23e shows a three-cup anemometer, which is insensitive to wind direction. In one design, the shaft drives a DC tachometer, which generates an output voltage that is proportional to the wind speed. This signal can be used as the input to a remote mounted indicator or recorder. The impeller design shown in Figure 7.23c is also provided with a shaft-driven tachometer. Because the tail of this impeller design always points the impellers into the wind, this instrument can detect both wind speed and wind direction.

The response speed of an anemometer is expressed in the "length of wind" that has to pass though the meter before the velocity sensor will respond which amounts to 63% of a step change in velocity. This is known as the distance constant and is expressed in feet. A typical distance constant for commercially available units is 6 ft (1.8 m).

RAIN GAUGES

Rainfall is measured by a tipping bucket rain gauge. Rain is collected in a funnel and alternately fills two small cups (buckets). These two cups are attached together and placed on a pivot such that when one fills up, the assembly tips to the side. At each tip, the full cup is emptied and the empty cup is placed under the funnel.

A collector and a tipping bucket mechanism are provided in this instrument such that each 0.01 in. (0.25 mm) of rain causes the alternate fill and tip of the mechanism. A magnet is attached to the bucket, and causes a momentary closure in a magnetic switch with each tip of the bucket. The resulting electrical impulse can be sent to a counter, an event recorder, or telemetering or data acquisition equipment.

Rain gauges should be installed on a level plot of ground, at a distance from any object of at least two and preferably four times the height of the object above the top of the gauge. All types of gauges must be exposed with the rim of the receiver in a horizontal plane and at a level well above the average level of snow surfaces. Roof-mounting of rain gauges should be avoided when possible. Air currents at heights other than ground level have been observed to cause an apparent decrease in rainfall catch commensurate with the increase in mounting height above the ground level.

© 2003 by Béla Lipták

Objects, which individually or in small groups constitute a "windbreak," reduce prevailing wind speed in the vicinity of the gauge. The consequence of this reduction of wind speed will be to reduce possible eddy currents and turbulence around the gauge. The presence of such objects is usually beneficial in providing a more accurate rainfall catch. Ideally, the "windbreak" objects (fences, bushes, etc.) should be generally uniform in height and in their distance from the gauge. Their height above the gauge should not exceed about twice their distance from the gauge.

BAROMETRIC PRESSURE GAUGES

Barometric pressure is detected by bellows against a reference, which is provided by a sealed-in vacuum. These differential pressure-sensing bellows are usually coupled to the core of a linear variable differential transformer, which generates the required electronic output signal.

For locating remote barometric pressure sensors, one should select a site where the instrument will not be subject to rapid fluctuations of temperature or to jarring and continuous vibration. Exposing the instrument to direct sunlight; radiant heaters; or to direct drafts, such as from open windows or doors, should be avoided.

AIR TEMPERATURE DETECTION

Air temperature is measured with a platinum resistance thermometer. This is a very accurate temperature-measuring device. It is placed in a long tube that has been painted white on the outside to reflect solar radiation. A small blower pulls ambient air into the tube and across the thermometer. This allows measurement of the true air temperature without the effect of solar heating.

Ambient temperature can be detected by thermocouples, resistance bulbs, or thermistors. They should be shielded from direct sun exposure as shown in Figure 7.23f.

DEW POINT AND RELATIVE HUMIDITY SENSORS

The sensor most often used for the detection of dew point is the lithium chloride type. If high precision is required, the cooled mirror type sensors should be used.

For relative humidity measurements, the elongation and contraction of hygroscopic elements (organic or inorganic) are usually utilized. For a detailed description of humidity and dew point sensors, refer to Chapter 8.

SENSOR ACCESSORIES

Readouts

The sensors can be 1000 ft (300 m) or more from the readout instruments. Some weather station packages are provided with multiplexers, so that the outputs of six or more sensors can all be read from the same wires. The connection between sensors and readout can be through hard wiring or through radio telemetering. The outputs of six or more sensors can all be recorded on the same chart.

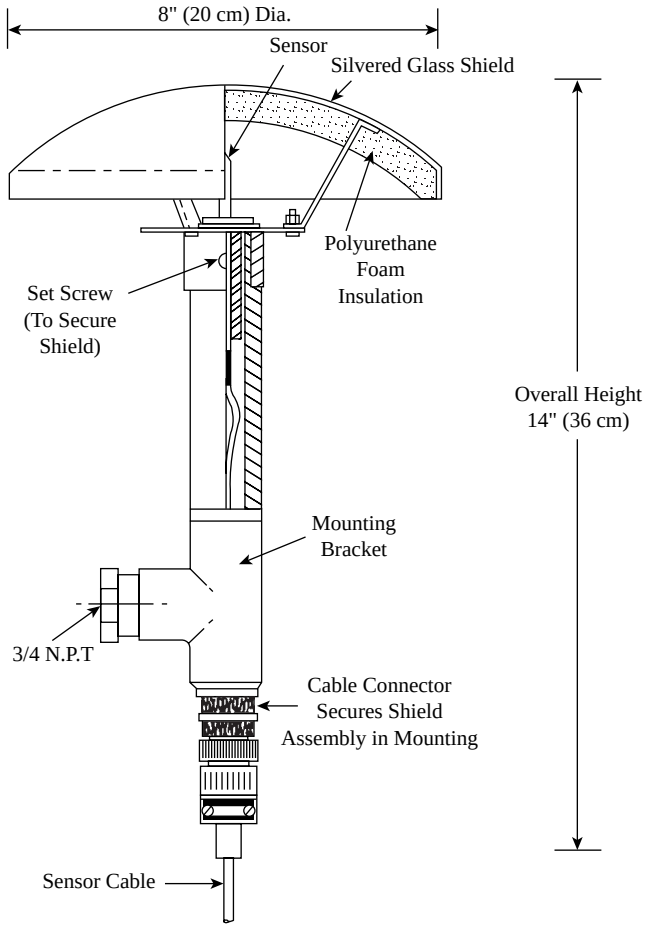

FIG. 7.23f
Temperature radiation shield with natural ventilation.

Locations

The detection of wind speed should ideally be made on an open terrain. If this is not possible, one can minimize the effect of single-story buildings by:

1. Locating the sensor a distance upwind of a building equal to the building height
2. Locating the sensor at least one building-height above the roof
3. Locating the sensor a distance downwind of the building equal to five to ten building-heights

If taller buildings are involved, it is best to erect a small tower to clear any obstruction. If this is not practical, an alternative is to place the instrument on a corner of the building that is upwind the majority of the time, or the corner that is exposed to the greatest frequency of wind. This will generally be the west corner of the building.

© 2003 by Béla Lipták



FIG. 7.23g
From left to right: 30 ft tower with wind monitor, 10 ft tower with processor-electronics, visibility sensor, present weather sensor, 3-pressure sensors, relative humidity and temperature/dew point; lightning sensor and cloud height sensor; precipitation detector. (Courtesy of Coastal Environmental, Model OS-21 FBS airport weather station.)

Before making a permanent installation, it would be wise to visually monitor a small flag on the end of a pole placed in various locations on the roof to help determine the location that is most representative.

Horizontal-mount booms that extend from existing towers should be fabricated so that sensors will extend a distance of 5 to 10 ft (1.5 to 3 m) from the tower assembly (depending on tower thickness). Wind direction sensors are oriented at the time of installation in reference to either true north or magnetic north.

Instrument Shelters

Whenever possible, instrument shelters, as well as remote temperature and/or humidity sensors, should be installed at a height of 4 ft (1.2 m) (or greater) over earth or sod. They should be at least 100 ft (30 m) from any concrete or other hard-surfaced area, and not closer to any other object than four times the height of the object above the instrument shelter or remote sensors.

Avoid roof installations if possible. If it is necessary to mount shelters and sensors on a roof, they should not be closer than 30 ft (9 m) to any large, vertical reflecting surface (walls, etc.), exhaust fans, or cooling towers. Electronic remote sensors when mounted on a roof should be at least 9 ft (2.7 m) (or greater) above the roof surface. To minimize radiation effects from the roof, remote sensors can also be mounted on a horizontal boom so that they will extend from the side of a building roof or existing tower. Horizontal booms should extend approximately 5 to 10 ft (1.5 to 3 m) from the side of the building roof or tower assembly.

For a photograph of a complete airport weather station, refer to Figure 7.23g.

Bibliography

"Anemometers," *Measurements and Control*, June 1994.

MacDonald, T.H., "Some Characteristics of the Eppley Pyrheliometer," *Monthly Weather Review*, Vol. 79, No. 8, August 1951, pp. 153–159.

© 2003 by Béla Lipták

Meteorological Buoy and Coastal Automated Network for the U.S., Washington, D.C.: National Academy Press, 1998.

"Moisture/Humidity Instruments," *Measurements and Control*, February 1993.

Next Generation of Weather Radar, U.S. House of Representatives, Washington, D.C., 1995.

U.S. Department of Commerce, *National Weather Service Bulletin*, LS5927, Washington, D.C., January 1963.

Yellott, J.I., "Solar Radiation Measurement, Low Temperature Applications of Solar Energy," New York: American Society of Heating, Refrigerating, and Air Conditioning Engineers, 1967, pp. 19–25.

Yellott, J.I., "Solar Radiation Sensors," in *Environmental Engineers Handbook*, Vol. 2, Lipták, B.G., Ed., Chilton/Haynes, 1974, p. 442.

Yellott, J.I. and Pittinger, A.L., "Development of an Indicating and Integrating Solar Radiometer," ASME Paper 67-WA/Sol-3, Winter Annual American Society of Mechanical Engineers Meeting, 1967.

© 2003 by Béla Lipták

7.24 Weighing Systems: General Considerations

H. A. MILLS (1969) **H. E. LOCKERY** (1982) **H. I. HERTANU** (1982, 1995)
B. G. LIPTÁK (1995, 2003)

Types of Applications:	Bench of floor scales, drum filling scales, hopper and tank scales, bulk weighing systems, truck scales, monorail and railway truck scales, crane scales
Types of Weight Sensors:	Mechanical designs can be balanced by poise weight, spring, or electromagnetic forces. Load cells can be one of the following electronic designs: strain gauge, capacitance, linear variable differential transformer, magnetostrictive, or photoelastic with the strain gauge being the most popular. Some pneumatic and hydraulic load cells are also used.
Inaccuracy:	Up to 0.01% of full scale (note that gravitational attraction on the surface of the planet varies by as much as 0.5%). For more details, see Section 7.25.
Ranges:	See Section 7.25 for a listing for the different types of sensors covering ranges from grams to thousands of tons.
Suppliers:	Refer to Section 7.25.
Conversion among Different Weight Units:	See Table 7.24a.

INTRODUCTION

The various forms of weighing are discussed in different sections in this handbook. The detection of weight in motion, including belt, gravimetric, and loss-in-weight feeders are covered under the discussion of mass and solids flow metering in Section 2.23. The design and performance of the various solid flow sensors is covered in Section 7.25, while this section discusses the general design considerations in weighing of stationary objects.

The section starts with some introductory paragraphs, including a fairly detailed glossary, because the language used in connection with weighing is somewhat unique and it is important to fully understand the meaning of each term. The introduction is followed by an overview of weighing applications and of the performance of the different sensors used in weighing. The section is concluded with recommendations on how to protect from interference from ambient conditions (temperature, wind, etc.), how to stabilize the weigh-tanks, attach the piping to them, and maintain the system.

WEIGHING GLOSSARY

***Accuracy*—**The intended meaning of the term is inaccuracy and it relates to the size of the error. It is usually expressed as a percentage and it is important to determine if the percentage is that of full scale (% FS) or that of actual reading (% AR). If the measured weight is in the lower part of the detector's range, the % AR error will much exceed % FS. Historically a balance was a device that determined mass by balancing an unknown mass against a known mass as with a 2 pan balance. In modern weighing machines, balances are usually of the design that uses a force restoration mechanism to create a force to balance the force generated by the unknown mass.

***Analog Electronics*—**In case of electronic load cells, this is that segment of the loop, which is between the measuring cell and the analog-to-digital converter.

***Baud Rate*—**The speed of signaling or the rate of communication between two instruments connected by an RS-232 interface. One baud (or bit) is one pulse

© 2003 by Béla Lipták

or one code element per second. The more common rates range from 300 to 9600.

Calibration Error—The difference between the size of a dead weight corresponding to near the full capacity of the scale and the actual reading on the digital or analog readout.

Capacity—The maximum weight the particular scale is capable of measuring.

Check Weighing—Checking a weight against some limits to determine if it is within those preset limits.

Combined Error—The error that also reflects nonlinearity and hysteresis. It is defined as the maximum deviation from a straight line, which is drawn between the no-load point and the full rated output. It is expressed as % FS and is measured when the load is increasing and again when the load is dropping.

Cornerload Error—This term refers to the variation experienced in the displayed weight as the load is moved within the weighing pan.

Count—The smallest increment that the digital display registers.

Creep—The change in load cell output signal that occurs with the passage of time, while no change occurs in either the load or the environmental conditions and other variables. It is usually measured while full scale (rated) load is applied and is expressed as a percent of full scale (rated output) over a particular period of time (% FS/h, etc.).

Dead Load—The static load (weight) that does not vary and is registered at zero applied load.

Deflection (Load Cell)—The displacement along the primary axis of the load cell as the load is increased from no-load to full (rated) load.

Digit—The smallest increment of weight that the digital display resolves.

Drift—See **Creep**.

Dribble Flow—The last increment of charge in batch processes, which is added at a much reduced rate.

Eccentric Loading Test—Also called shift test or off center loading test. It is tested by weighing in the center of the four quadrants of the weighing platform.

Excitation Voltage—The voltage applied to the input terminals of an electrical bridge circuit.

Flexible Bearings—The component in the load cell that allows the force coil to move without friction.

Force Motor—See **Measuring Cell**.

Force Restoration—A method to measure an unknown load by balancing it with a force generated by coils mounted in a magnetic field.

Gross Weight—The total weight of the material of interest plus the container and wrapping or the weight of a vehicle or container when it is loaded with goods.

Gross Weight-In—The total weight set-point while charging material into a tank or vessel.

Gross Weight-Out—The total weight set-point while discharging material from a tank or vessel.

Heel—The material that remains in the vessel after the dump or empty cycle is completed.

Heel Limit—The maximum allowable weight setting for the heel, which usually is internally programmable.

Hysteresis Error—The variation in the readings that are registered when repeatedly weighing the same object or quantity.

Increment—The finest division on a scale.

In-Flight Quantity—The material that enters a receiving vessel after the feed valve is closed.

Instability—Random, sporadic variation in the displayed reading that has no trend.

Leveling—The adjusting of the weighing platform so that it will be completely horizontal. Therefore, its readings will be repeatable if the platform is moved.

Linearity—The deviation of the calibration curve (the average of upscale and downscale readings) from a straight line, which is so positioned as to minimize the maximum deviation. Usually tested by placing known weights on the scale between zero and full capacity.

Load Cell—A detector device that produces an output signal proportional to the applied weight or force.

Load—Safe Maximum—The maximum percent of rated capacity that can be applied without causing a permanent shift in the load cell performance, which would exceed the specified allowable amount.

Load—Ultimate Maximum—The maximum percent of rated capacity, which can be applied without causing structual failure.

Measuring Cell—The part of the load cell that measures the load (weight or force) and generates an electronic signal related to that measurement. Also called—mechanical system or force motor.

Menu—A set of options or parameters that are usually factory set (but can also be set by the user) and serve to determine the characteristics of the weighing system.

Net Batch-Out—A weighing mode of operation where the set-point determines the amount to be withdrawn from the vessel.

Net Weight—The weight of material excluding its container or wrapping.

Net Weigh-In—A mode of weighing where the set-point for the total material to be added is based on zero, which corresponds to the weight that is already in the vessel.

Nonlinearity—See **Linearity**.

Off Center Loading—See **Eccentric Loading Test**, also called shift test.

Poundal—It is the foot-pound-second (fps) unit of force, defined as the force, producing an acceleration of 1 ft/s^2 on a mass of 1 lb.

Primary Axis—The axis along which the load cell is designed to be loaded. It normally is its geometric center line.

© 2003 by Béla Lipták

***Rated Capacity*—**The maximum load that the load cell is designed to measure.

***Rated Output*—**The algebraic difference between the outputs at no load and at rated load.

***Readability*—**The value of the finest division on an analog scale or the smallest increment of weight that a digital display resolves.

***Repeatability*—**The closeness of agreement among a number of consecutive measurements of the same weight under the same operating conditions and approaching from the same direction. Usually expressed as a standard deviation of 5 to 10 tests. It does not include hysteresis and is expressed in percent of span.

***Reproducibility*—**Same as repeatability, but the measurements can approach from both directions and can be taken over a long period of time. Therefore, it includes hysteresis, dead band, drift, and repeatability.

***Resolution*—**The finest division on an analog scale or the smallest increment that a numeric display can indicate.

***Shift Test*—**See **Off Center Loading**.

***Shunt Calibration*—**Electrical simulation of load cell output by insertion of known shunt resistors between appropriate points within the circuitry.

***Side Loading*—**Any load acting 90° to the primary axis of loading.

***Slug*—**The fps unit of mass, defined as the mass that will be accelerated by one ft/s^2, when a 1 lb_f acts upon it. It is equivalent to approximately 32.2 lb mass.

***Tare*—**The weight of an empty container.

***Temperature Compensation*—**The automatic correction of any errors that might be caused by a change in the temperature. On less accurate scales, this compensation is done within the load cells, while on more accurate weighing systems, it is done in software.

***Temperature Effect on Rated Output*—**The amount of change in the rated output that is caused by a change in ambient temperature. It is expressed as percentage change in rated output per 100°F change in ambient temperature.

***Temperature Effect on Zero Balance*—**The change in zero balance caused by a change in ambient temperature. It is expressed as change in zero balance in percent of rated output per 100°F change in ambient temperature.

***Temperature Range—Compensated*—**The range over which the load cell is compensated to maintain the rated output and the zero balance within specific limits.

***Temperature Range—Safe*—**The extremes of temperature within which the load cell can operate without permanent adverse affect on any of its performance characteristics.

***To Tare*—**The action of deducting the weight of the container from the total weight, so that the indicator directly reads the net weight only. For example, if the capacity of the scale is 500 lb and 200 lb is tared, the remaining net capacity of the scale is 300 lb.

***To Zero*—**To reestablish zero when small amounts of material were left on the scale. Zero and tare are often combined on the same key and the terms are often used interchangeably.

***Zero Balance*—**The output signal of a load cell with excitation, but with no load applied, expressed in percent of rated output.

***Zero Float*—**The zero shift caused by one complete cycle of successive rated tensile and compressive loading.

***Zero Return*—**The difference in zero balance measured immediately before rated load application of a specific duration and when the output has stabilized after the removal of the load.

***Zero Shift*—**A change in zero balance with time.

***Zero Stability*—**The degree to which a weighing system maintains its zero balance with the passage of time, as long as all environmental conditions and other variables remain constant.

What is Weighing?

While the old axiom, "A Pound's a Pound, the World Around," is hardly true today, it gives a fair indication of the faith that mankind still has in the process of weighing. This faith is justified because weighing is more accurate than flow, volume, or level measurement. It is also more reliable, as it requires no contact with the material being weighed. In addition, it does not need to have moving parts, and, therefore, it is of low maintenance.

In the sense with which we are presently concerned, to weigh an object is to measure the force of gravity on the mass of the object at the particular location on the planet. Thus, if we establish a standard of mass and agree on a particular location, we may compare objects with our standard and establish a relative relationship between them and can arbitrarily call this ratio weight. It is true that in order to have an agreeable system of weighing for commercial or process control purposes, for all places and locations throughout the world, it is necessary to agree on a standard of mass and on a standard of acceleration due to the force of gravity.

This has been done through convention of various countries (Metric Treaty of 1875). Our system of measurement is based upon a cylinder of platinum-iridium alloy kept at the International Bureau of Weights and Measure at Sevres, France. Although this prototype is actually a standard kilogram, through the use of a factor (1 kgm = 2.2046 lbm), we may derive a corresponding standard mass equal to 1 lb.

The internationally accepted unit of mass is the kilogram (see Table 7.24a for conversion from other units), and the internationally accepted unit of force is called the Newton, which is defined as the force required to accelerate 1 kg by 1 m/s^2. A Newton equals 0.2248 lb_f, or about 4 oz.

© 2003 by Béla Lipták

TABLE 7.24a
Conversion from Different Units of Weight to Kilograms

To Convert to kg From	Multiply by
Carat (metric)	2.000 000 E–04
Grain	6.479 891 E–05
Gram	1.000 000 E–03
Hundredweight (long)	5.080 235 E+01
Hundredweight (short)	4.535 924 E+01
Kilogram-force-second^2/meter (mass)	9.806 650 E+00
Kilogram-mass	1.000 000 E+00
Ounce-mass (avoirdupois)	2.834 952 E–02
Ounce-mass (troy or apothecary)	3.110 348 E–02
Pennyweight	1.555 174 E–03
Pound-mass (lbm avoirdupois)	4.535 924 E–01
Pound-mass (troy or apothecary)	3.732 417 E–01
Slug	1.459 390 E+01
Ton (assay)	2.916 667 E–02
Ton (long, 2240 lbm)	1.016 047 E+03
Ton (metric)	1.000 000 E+03
Ton (short, 2000 lbm)	9.071 847 E+02
Tonne	1.000 000 E+03

Note that in the English system of units, the values of pound-mass and pound-force have *different values*. In the past, terms such as poundals for force and slugs for mass have also been used.

The poundal is the foot-pound-second (fps) unit of force. It is defined as the force that produces an acceleration of 1 ft/s^2 on a 1 lb mass. The slug is the fps unit of mass, defined as the mass that will be accelerated by 1 ft/s^2, when 1 lb$_f$ acts upon it. It is equivalent to approximately 32.2 pounds mass.

Force and Weight

One frequently encounters the terms force and weight. What is their fundamental relationship? To understand this, one must consider Newton's law of universal gravitation, which points out that all material objects attract all other material objects. Thus, everything on or near the earth's surface is attracted toward the earth's center. By agreement, this attractive force of gravity has been termed the object's weight.

However, if we recognize that the gravitational attraction varies from place to place over the earth's surface (as much as 0.55%), we can readily see that in order for force and weight to be equal, we must *assume* that gravity is constant. In the United States, this has been done and is established as 980.0 cm/s^2 or 32.15 ft/s^2. All calibration standards used in this country and all standard expressions of weight are based on practices and standards established by the Department of Commerce, National Institutes of Standards and Technology. Thus, one may use the terms force and weight interchangeably, provided one accepts that the standard value for gravity is assumed to be valid at all locations (an inaccurate assumption).

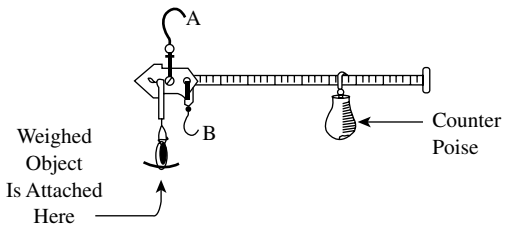

FIG. 7.24b
The steelyard is supported from the hooks A or B, the object being weighed is attached to the shorter arm of the lever, and the counterpoise is moved along the longer arm until balance is established.

Historical Considerations

Although the discovery of the principle of the lever as a means of weighing is attributed to Archimedes (287–212 B.C.), it is a fact that the common steelyard was in use throughout the Orient and India many centuries before Archimedes (Figure 7.24b). While Archimedes may have first adroitly defined the mathematical principles involved, simple first class lever balance systems were frequently referred to in the earliest records of civilization. Mankind thus acknowledged the principle of exchange based on weight. Other early standards and equipment may have been crude in comparison with those of the present.

It is interesting to note that nearly 16 centuries went by without any important addition to the fundamental teaching of Archimedes. Not until the time of Leonardo da Vinci (1452–1519) were the various classes of levers investigated. Da Vinci sketched out and described many styles and designs of lever weighing systems. The basic principle of the lever platform scale, the multiple lever (articulated) scale, and the first direct indicating scale are all attributed to the genius of da Vinci. Although the principle of the simple spring balance was enumerated by Hooke in 1676, da Vinci had illustrated and described such a system of weighing nearly two centuries earlier.

From the 17th century to the present, while vast improvements have been made in the methods of fabrication and in the materials that are available to build scales, no fundamental changes in principles of the lever scales and spring balance have occurred. Even today, the majority of scales and weighing systems are based on the early principles set forth by Leonardo da Vinci.

Not until about 100 years ago, with the advent of the hydraulic load cell, and more recently with the discovery and development of the electrical strain gauge, have there been significant changes in the principles and equipment involved in weighing.

Advantages of Weighing

As compared to volumetric measurement, weighing has several outstanding advantages. Perhaps the most fundamental advantage is the freedom from temperature effects on volume.

© 2003 by Béla Lipták

In volumetric measurement, one must always take into consideration the temperature of the material being handled, and apply correction factors to obtain results based on mass. Weight is unaffected by temperature, and if the material can be physically handled, it can be weighed. Consider, for example, the weighing of molten metal, for which temperatures of 2400 to 2600°F (1300 to 1400°C) are commonplace. The difficulty of accurate volumetric measurement is easily visualized. Yet highly accurate (0.1%) weighing is possible with modern strain gauge weighing equipment.

In many manufacturing operations and in process control systems, the gravimetric (weight) control may provide the most direct and most accurate measurement. Consider, for example, the problem of maintaining constant proportions between solvent and solute where the solvent may enter the process at widely varying temperatures. If volumetric measurement of the liquid solvent is employed, constant temperature correction must be applied; if both ingredients are controlled by weight, then direct control is maintained and more accurate results may be expected.

In the handling of liquids and solids, the weighing techniques provide commerce and industry with an accurate and direct method of control, relatively independent of process media characteristics, physical location, time, atmospheric conditions, and temperature. Units of weight are easily convertible to various monetary values, facilitating commerce and exchange.

In the handling of such material as chlorine, liquefied petroleum gases, and other like materials, it should be noted that the weighing process provides a safe and convenient method of control without container penetration, external sight-glasses, etc. In the case of dangerous or highly corrosive materials, this is a very important advantage. The same may also hold true for cryogenic materials.

WEIGHING APPLICATIONS

Weighing System Specification

Table 7.24c lists the data the user has to specify before the manufacturers can properly bid on a weighing system. The information in the table describes the weigh tank, the process in which the tank is used, and the instrumentation required to fit into the overall, plant-wide system.

In connection with the tank, one must describe the tank supports, the pipe connections, agitation, if any, the tank location, including seismic classifications and wind conditions, the required load cell materials, and protection (wash-down) required. The process data should state the weighing range and the temperature conditions. The instrumentation data should specify the maximum allowable error for the complete system, the type and location of the transmitter and/or display devices and the electrical area classifications in those locations. In addition, the supplier should be advised of the communication protocols and electrical interface requirements, including the digital networks and fieldbuses used in the plant (see Table 7.24d.) The International Electrotechnical Commission (IEC) has adopted DeviceNet as an international standard within their networking standard IEC 62026.

In addition to digital communications, the weighing system packages can also be provided with various software packages that allow engineers and operators to configure, calibrate, and provide documentation for their systems.

TABLE 7.24c
Weighing System Specification Form

Vessel Related Information
The tank is supported on how many points?
Is the vessel suspended or supported on legs/gussets?
Are piping connections flexed?
Is the vessel located in or outdoors? If outdoors, what is the design basis for maximum wind velocity (MPH)?
What is the area seismic classification? (None or Zone 0, 1, 2, 3, or 4)
Is vessel agitated? (Give type, HP, location)
Is weigh tank in a wash-down area?
Are stainless steel load cells required?
Process Data
What is the empty (dead) weight of the tank?
What is the full (live) product weight of the tank?
What is the product being weighed?
What is the minimum, normal operating, and maximum ambient temperature?
What is the minimum, normal, and maximum process temperature?
Will conduction cause load cell temperatures to exceed 130°F? Should thermal pads be used?
Instrument and Control Data
What is the system accuracy requirement in % FS or other units? Is the system to be installed and/or calibrated?
Should the weight transmitter be blind or indicating? Should the transmitter be provided with set-point control capability?
Is the transmitter located at the vessel or in the control room? What is the distance between load cells and transmitter?
What is the vessel and what is the transmitter hazardous area classification? (General Purpose, Class 1, 2, or 3, Div. 1 or 2, Group A, B, C, D, E, F, or G. Can also use NEMA Classification 1 to 13.)
What will the weigh transmitter be connected to? (PC, PLC, DCS, Other)
If analog signal is required, is it to be 0–20 mA, 4–20 mA, or 0–10 VDC?
What are the electrical interface requirements? (None, RS-485, RS-422, RS-232, or other)
What are the communication protocol requirements? (ASCII, Modbus RTU, Modbus Plus, DeviceNet, others)
Is a network/gateway controller desirable?
Is remote indicator required?
With questions please contact:

© 2003 by Béla Lipták

TABLE 7.24d

Attributes of Various Control and Fieldbus Standards

Protocol	*Standard*	*Industry*	*Special Features*	*Processing*	*Medium Access*	*Nodes*[a]	*Medium*	*Segment Length*	*Bus Safety Concept*	*Further Information*
Ethernet	IEEE 802.3	Office, factory, process	Most widespread network protocol	Decentral	CSMA/CD	Max 30[b]	100 Base T4, copper 100 Base FL, fiber optics 100 Base TX, copper	Max 100 m Max 3000 m Max 100 m	None	Industrial Ethernet Association. www.industrial ethernet.com
Foundation Fieldbus FF HSE	IEC 61158	Factory, process	Function blocks for decentralized control	Decentral	CSMA/CD	Max 30	Copper or fiber optics	Max 100 m	None	Fieldbus Foundation. www.fieldbus.org
Foundation Fieldbus FF H1	IEC 61158	Process	Function blocks for decentralized control	Central/ decentral	Token passing	Max 32	Copper	Max 1900 m	Exd or Exi	Fieldbus Foundation
PROFIBUS-DP	IEC 61158	Factory. process	Optimized for remote I/O	Central	Token passing	Max 126	Copper or fiber optics	Max 1200 m (copper) Several kilometers with optical fibers	None	PROFIBUS User Organization. www.profibus.com
PROFIBUS-PA	IEC 61158	Process	Standard certification process for hazardous areas	Central	Token passing but normally operated as master/slave	Max 32	Copper	Max 1900 m	Exi to FISCO model	PROFIBUS User Organization
World FIP	IEC 61158	Factory	Distributed real-time database	Decentral	Token passing	Max 256	Copper or fiber optics	Max 10 km	None	WorldFIP organization. www.worldfip.org
Interbus	IEC 61158	Factory	Optimized for remote I/O	Central	Single master with synchronized shift register	Max 256	Copper	Max 13 km	None	Interbus Club. www.interbusclub.com
ControlNet	IEC 61158	Factory	Optimized for factory applications	Central	TDMA	Max 99	Copper (coax)	Max 6 km (with repeaters)	None	ControlNet International. www.controlnet.org
Swiftnet	IEC 61158	Aircraft	Optimized for aircraft	Decentral	Token passing	Max 1024	Copper	Max 36 m	None	SwiftNet
P-Net[a]	IEC 61158	Factory, ship-building	Multinetting capability	Central	Token passing	Max 32 masters Max 125 slaves	Copper	Max 1200 m	None	International P-NET User Organization. www. p-net.com
MODBUS	Industrial standard	Process	Simple structure, widely used	Central	Master/slave	Max 247	Copper	Max 1200 m	None	MODBUS users Web site, www.modbus.org
DeviceNet	EN 50 325	Factory	High immunity to electromagnetic interference	Decentral	CSMA/CD	Max 200	Copper (4-wire)	Max 500 m	None	ODVA. www.devicenet.org
ASI	EN 50 295	Factory, process	Power over bus, for simple actuators and sensors	Central	Master/slave	Max 124	Copper	Max 100 m	None	ASI association. e.g., www.infoside.de/infida/asi/ asi000.htm
HART	Industrial standard	Process	Integrates into existing 4–20 mA systems	Central	Token passing	Max 16	Copper	Max 3000 m, dependent on number of devices	Ext. Exd., or Exe	Hart Communication Foundation. www.hartcomm.org

[a] Number of nodes that can be physically connected per segment: in some cases the number of logical addressable nodes can far exceed this number.
[b] Practical guideline for control networks: the more nodes there are, the longer the refresh time of the system.

© 2003 by Béla Lipták

Weighing vs. Metering

Hopper, tank, or reactor weighing are the most widely used application of scales. Hopper scales range up to 75,000 lb (35,000 kg), while tank scales can range up to 150,000 lb (70,000 kg). Batch formulation is usually under microprocessor (distributed control system or programmable logic controller) control, where a number of ingredient hoppers, collecting bins or weigh tanks, feeders and discharge devices, and conveyors are automatically sequenced through the operation.

The recipe ingredients are fed into the same weight hopper one at a time or into different weight hoppers simultaneously. The charging of the ingredient is done in two stages: first at full flow, and near the target weight at dribble flow. At the end of each ingredient charge, an automatic tolerance check is made and, if the precision is acceptable, the individual ingredient or the completed formulation is discharged. A printout is provided for each batch giving the batch number, the desired recipe formulation, the actual total batch weight, the actual individual ingredient weights, the hopper residual (heel) after dumping, and the destination. As part of the batch control package, a computer remote terminal is usually provided, which continuously displays the batch status.

A large number of weighing installations are used in connection with batch charging of various chemicals to meet the requirements of a particular recipe. Because the use of weight scales necessitates the purchase of weight tanks and pumps, the cost of such installations can only be fairly evaluated by considering the price of all related equipment and building space. If a comparison is made on this basis with flow-metering hardware that requires no additional equipment or support design, the relative costs of weighing versus metering techniques will be placed in a more realistic perspective.

In general, the weighing method is favored in all cases where the batch media is hard to handle, such as in solids, slurries, and very high viscosity or very hot fluids. Elsewhere, the choice might be made on the basis of installed cost (which favors metering), accuracy (which favors weighing), and other relevant considerations.

Bulk Weighing

When large quantities are being weighed (bulk weighing), it can be advantageous to incrementally weigh the total quantity in a bulk weigher. Such systems are used on grain elevators, where weighing accuracy is increased and weigh hopper costs are reduced by weighing the contents of, say, a 100-t hopper car in 10 or 20 increments, instead of all at once (Figure 7.24e). The sequence of operation is such that during filling, the gate between bins A and B opens and charges the weight hopper to a preset draft weight. At this point, the gate between A and B closes and the gross weight of B is recorded as a positive weight. After that, the gate between B and C opens and stays open until B is empty. The empty weight of B (including the heel left in the hopper) is recorded as a negative weight and the cycle is repeated.

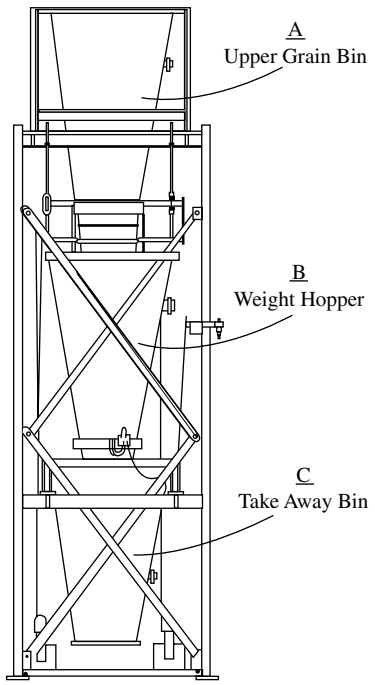

FIG. 7.24e
Bulk weighing system used to measure large weights in applications such as in grain elevators. (Courtesy of Cardinal Scale Mfg. Co.)

Weighing installations in the petrochemical industry can also include microprocessor-controlled drum filling scales. At the end of filling, these scales automatically print the drum number, its weight, the identification of the contents, and the time and date.

Weighing Platforms

In many industries, portable bench scales (sometimes with wheels for moving) are used. Their capacities range from 25 lb (10 kg) up to 2500 lb (1000 kg), and their corresponding platform sizes range from 16 × 16 in. (0.4 × 0.4 m) up to 36 × 36 in. (0.91 × 0.91 m). Floor scales are also widely used. In these permanent installations, a 12 in. (0.3 m) deep frame is incorporated into the floor structure, so that the weighing platform is flush with the floor. The removable center plate provides maintenance access to the working components. These units range in size from 500 to 10,000 lb (200 to 5000 kg).

A less expensive installation uses a deck scale; it requires no pit, but instead rests right on the floor. This results in a need to lift the weight up because the weighing platform is above the floor. To minimize this inconvenience, deck scales that are portable and low-profile (2 to 3 in., or 5 to 8 cm, above the floor) have been marketed. These units are available with up to 20,000 lb (10,000 kg) ranges and with 6 × 8 ft (2 × 2.5 m) platforms.

Weighing Platform Transducers Weighing platform transducers are now the basic sensing elements in medium capacity, low height, semiportable platform scales. Available in

© 2003 by Béla Lipták

TABLE 7.24f
Performance Characteristics of Beam-Type Weighing Platform

Rated output	1.5 mv/v
Terminal linearity	0.05%
Hysteresis	0.03%
Repeatability	0.02%
Corner loading sensitivity	0.03%
Temperature effect on zero balance	0.15%/100°F (38°C)
Temperature effect on output	0.08%/100°F (38°C)

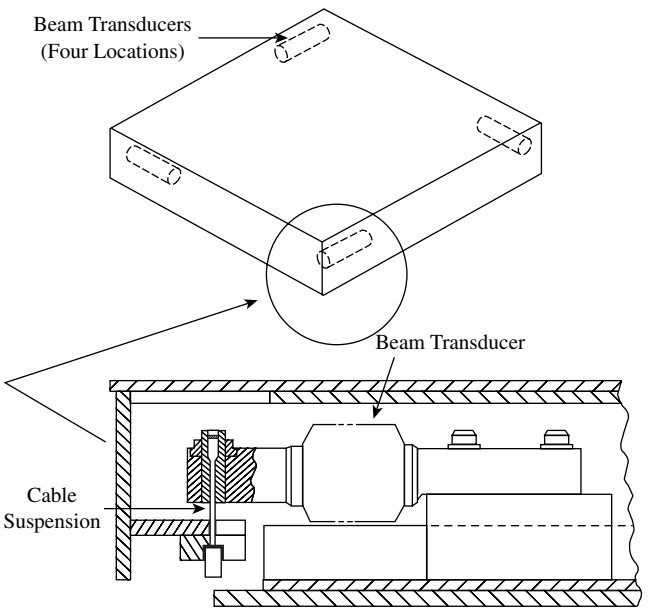

FIG. 7.24g
Beam-type weighing platform.

capacities from 500 to 14,000 lb (225 to 6300 kg), one can be located almost anywhere within the process area without the need for pits and attendant preparation costs. Typical units, depending on capacity, are from 2 to 35 ft^2 (0.19 to 3.3 m^2) in platform area and 1.5 to 6 in. (37.5 to 152 mm) in overall height (Table 7.24f).

Beam-type transducers are placed in each corner of the weighing platform (Figure 7.24g). A steel cable or alternative flexible arrangements suspend the active weighing platform from the end of the transducer. The flexible connection allows the transducer to operate in its normal deflection mode, capitalizing on its inherently high accuracy. The flexible connections also render the entire structure less susceptible to uneven foundation conditions.

In addition to low height, high accuracy, and relative insensitivity to foundation unevenness, the units are semiportable.

Beam-Type Platforms Smaller, lower capacity beam-type platforms available in the range of 10 to 250 lb (4.5 to 114 kg) use two beam-type sensing elements (Figure 7.24h). Features

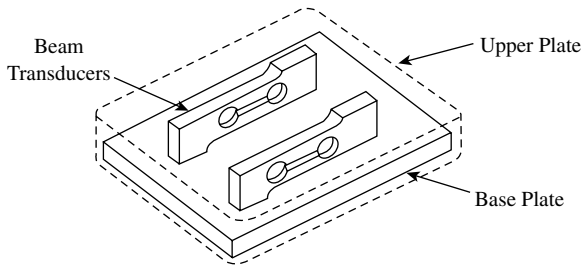

FIG. 7.24h
Low-capacity beam platform.

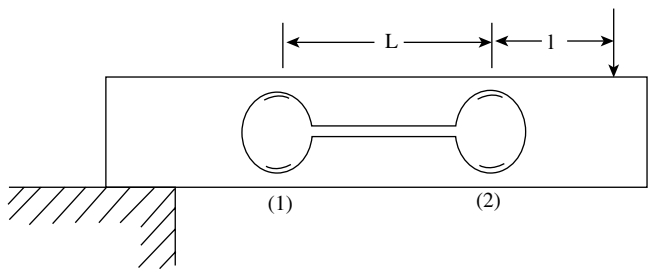

FIG. 7.24i
Load position desensitization.

and characteristics are similar to those of platforms already described. One significant difference relates to the use of only two beam-type sensing elements. In this configuration, the reduction of corner loading sensitivity or load placement errors must be approached differently. It is no longer a matter of simply dividing the load among four linear transducers, but rather involves a reduction of the effect of changing load position on two transducers.

A changing load position results in a different bending moment applied to the beam-type transducers (Figure 7.24i). However, as discussed in connection with beam-type transducers, the strain gauges are applied and wired in a way such that the beam-type element is insensitive to load position or bending moment.

This concept can be explained as follows. Strain gauges at location 1 sense the bending moment there (M_1). Gauges at position 2 sense the bending moment at that position (M_2). The strain gauge bridge is arranged so that the output is proportional to the difference $M_1 - M_2$, and this may be expressed by the relationship:

$$M_1 - M_2 = F(L + l) - F(l) \qquad \textbf{7.24(1)}$$

$$M_1 - M_2 = FL \qquad \textbf{7.24(2)}$$

Hence, the output of the beam-type transducer is proportional to the applied force and the distance between the strain gauge locations (L). It is insensitive to the placement of the load (l). This relationship is theoretically correct, assuming perfect strain gauge location and zero machining tolerances. Since this relationship seldom exists, electrical "tuning"

© 2003 by Béla Lipták

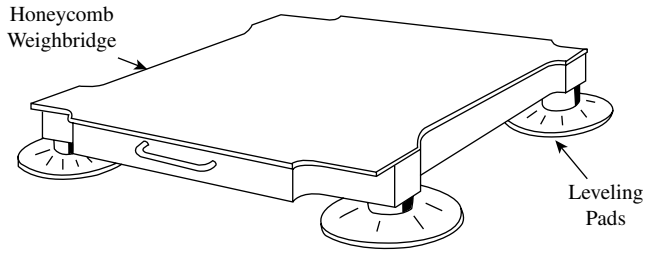

FIG. 7.24j
Portable platform scale.

TABLE 7.24k
Performance Characteristics of Portable Platform Scales

Rated capacity	50,000 lbs (22,500 kg)
Rated output	1.5 mv/v
Terminal linearity	0.05%
Hysteresis	0.05%
Temperature effect on zero	0.1%/100°F (38°C)
Temperature effect on output	0.15%/100°F (38°C)

methods tailor the sensitivities at locations 1 and 2 to give virtually perfect moment rejection.

The lower capacity platform configurations are available in capacities of 10 to 250 lb (45 to 114 kg) with roughly 15 × 18 in. (381 × 457 mm) weighing area and height of about 3.5 in. (88 mm).

Portable Platform Scales Another portable platform scale (Figure 7.24j) is composed of a honeycomb weigh-bridge and four load cells, one at each corner. Adjustable leveling pads level the platform. Each pad includes a swivel joint for accommodating sloping surfaces. An entire structure weighs less than 140 lb (63 kg).

The units are available with ramps and spacers for use with various vehicle wheel configurations. They are being used in portable aircraft and vehicle weighing (Table 7.24k).

Truck, Monorail, and Railway Scales

Truck Scales When weights of transported materials are to be measured, monorail, truck, and railway scales are used. Monorail scales range from 1000 to 10,000 lb (450 to 4500 kg). Truck scales are available for both static and in-motion weighing. The electronic truck scales provide fast printouts and self-diagnostic features. Typical truck scales range from 10 to 100 t and can be provided with platforms up to 12 × 100 ft (3.6 × 30 m).

Railway track scales are also available for static or in-motion weighing and can include self-balancing and self-checking features. They are available with up to 200-t ranges and with up to 50 × 150 ft (16 × 50 m) platforms. When railroad cars are loaded by floating chutes, the positioning of the trucks and the opening and closing of the chutes can be fully automated.

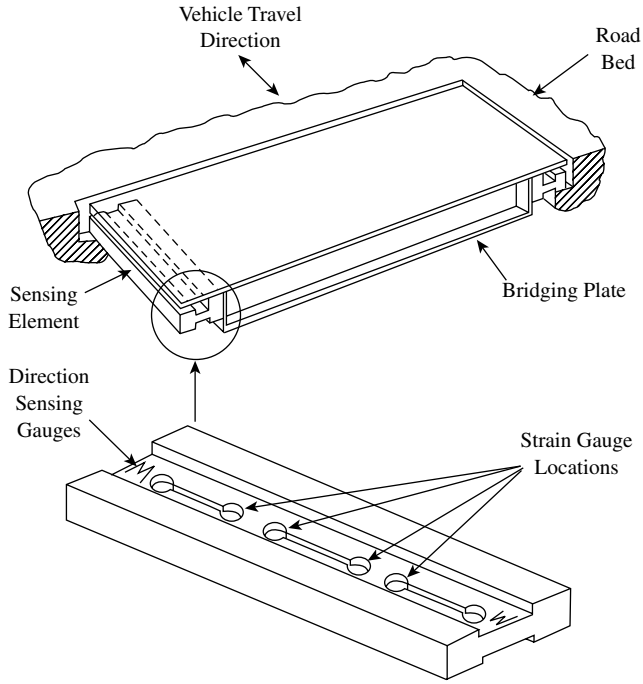

FIG. 7.24l
Treadle scale.

Treadle Scales In the past, scales for weighing vehicle axles on highways at toll booth locations utilized individual load cells, weigh-bridges, and mechanical stabilization hardware, all of which required expensive pits and additional installation. An integrated treadle scale now eliminates some of these requirements and provides a self-contained unit that can be lowered into place in a shallow pit.

Conceptually, the treadle scale (Figure 7.24l) consists of two strain gauge sensing elements located at opposite ends of the bridging plate. The sensing elements measure shear forces by virtue of the sensing element configuration and gauge location. Strain gauges at each of the reduced sensing sections sense the principal tensile and compressive strains due to the applied shear forces.

Additional strain gauges on the leading and trailing ends of the sensing elements are connected in a bridge configuration, providing direction sensing information for the associated instrumentation. Invalid vehicle entries are thereby detected (Table 7.24m).

Two units are generally installed end on end across a lane, spanning a distance of 10 ft (3 m). Total capacity for the pair is 36,000 lb (16,300 kg). Currently, the units are used to sense overweight vehicles for subsequent weighing by law enforcement scales. Another use is axle weight measurement for toll assessment by weight classification.

Monorail Weighing Transducer Another beam-type weighing transducer is being used in monorail conveyor systems such as those in meat processing plants. Conventional monorail weighing systems support the live rail by load cell and

© 2003 by Béla Lipták

TABLE 7.24m
Treadle Scale Performance Characteristics

Rated capacity	18,000 lbs (8,100 kg)
Rated output (10 volts excitation)	0.25 v
Terminal linearity	0.75%
Hysteresis	0.25%
Temperature effect on zero balance	1%/100°F (38°C)
Temperature effect on output	0.25% /100°F (38°C)
Size	15 in. × 60 in. (381 mm × 1524 mm)
Weight	200 lbs (90 kg)

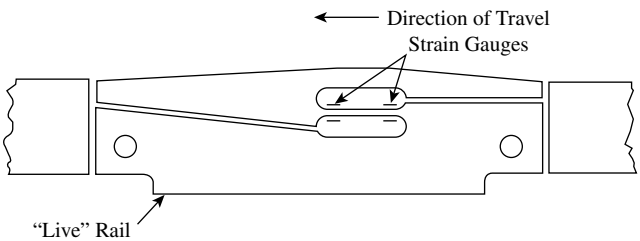

FIG. 7.24n
Monorail weighing transducer.

flexure assemblies. The new monorail transducer replaces the live rail and is self-supporting.

A typical unit is shown in Figure 7.24n. Strain gauges at the designed location sense bending strains as the load traverses the transducer. The gauges interconnected in a bridge arrangement supply a constant output independent of load position on the transducer. The sloping arrangement on the upper edge of the transducer decouples the moving carrier from the pusher mechanism during the sensing period. That means on the downward slope the carrier rolls free, eliminating contact with the pusher mechanism.

This simplified transducer not only provides greater measuring accuracy, but also eliminates a second load cell and associated flexure and mounting arrangements. This reduces the overall cost.

When cranes are used to transport material, weighing can take place during transportation. Load cells with ranges from 1000 to 100,000 lb (450 to 45,000 kg) can be incorporated into the hook assembly to achieve this (Figure 7.24o).

TYPES OF WEIGHING SYSTEMS

Mechanical Lever Scales

Mechanical lever systems are available for such applications as motor truck scales, railroad track scales, hopper scales, tank scales, platform scales, crane scales, dynamometer scales, and many other specialized types and applications.

They utilize the principles of the lever and involve countless combinations of load support arrangements. Although

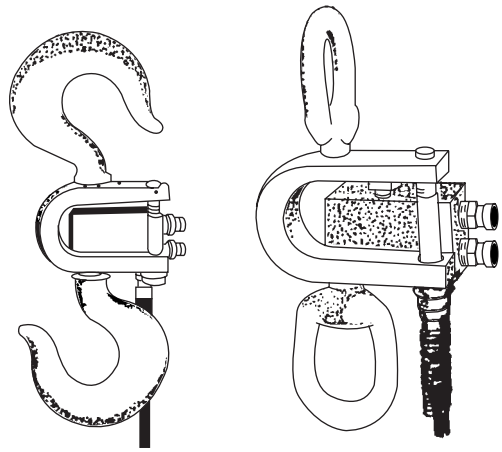

FIG. 7.24o
Load cells can be attached to cranes to measure the size of the load or to protect from overloading. (Courtesy of W.C. Dillon and Co.)

portable models are available in the lower capacities, most installations are permanent in nature and usually require some preparation of the installation area.

Mechanical level scales have reached a high degree of perfection through many years of development by hundreds of individuals and manufacturers. One of their advantages is their simplicity, which allows them to be used even in those parts of the world where sophisticated maintenance service is not available.

Because of their accuracy and reliability when well maintained, the performance of mechanical level scales has been the basis for laws and standards established in connection with weights and measures for the regulation of commerce on a local, national, and international level.

Spring-Balance Scales

Perhaps the simplest of all methods of weighing, the spring-balance scale consists basically of a calibrated spring and some means of reading deflection or elongation of the spring under load. This rudimentary principle can be very accurate when properly applied in correct design, with presently available high-grade constant temperature modulus alloys. Although spring-balance scales are dependent on relatively large deflection of the weighed load, and are best suited for relatively light loads, they represent a most economical approach to accurate weighing.

Load Cell Weighing

Weight sensors such as load cells are discussed in detail in Section 7.25. Although load cells have been available in one form or another for over 50 years, the use of load cells as weighing devices has become widespread only in the last few decades. Load cells have proven their accuracy and reliability for many types of installations that previoulsy had proven most difficult.

© 2003 by Béla Lipták

Load cell weighing systems have several outstanding advantages:

1. They are relatively easy to install
2. They have fast response and short settling time
3. They are not subject to wear
4. They permit remote location of the readout module
5. They yield an analog weight signal that is either directly compatible with, or easily converted to, standard control instrumentation

FACTORS INFLUENCING PERFORMANCE

Some of the common factors affecting weighing system performance are:

1. Temperature
2. Vibration
3. Ambient conditions
4. Maintenance
5. Installation
6. Calibration

Temperature Effects

In general, most scales or weighing systems are designed to operate under normal atmospheric temperature conditions. Operating personnel are usually present, at least part time. The average operating limits are 20 to 120°F (−6.7 to 48.9°C). Operations outside these limits are commonplace; wintertime operation of platform scales with the scale indicator head located in a heated control room is one example. This example also infers operation at different temperature levels on a single piece of equipment.

All modern weighing systems are compensated for operation over varying temperatures. Performance and accuracy guarantees are usually given for operation at 70 ± 50°F (21 ± 28°C). For operation outside these limits, temperature correction curves are available from most manufacturers.

Mechanical Lever Scales A mechanical lever scale system is largely self-compensating when subject to gradual temperature changes. In a lever ratio relationship, it can be readily seen that although the overall length of a lever may change due to expansion, the relative position of the fulcrum point with respect to the reaction points does not change and the lever ratio remains constant.

However, under conditions of nonuniform temperature on a lever system, errors in reading or balance will be introduced. The types of direct reading scale errors due to temperature shift may be divided into zero shift or span shift.

Zero shift causes a constant error over the complete weight range. Span shift error is variable over the weight range. In modern weighing packages, both can be automatically detected and corrected. Zero error or unbalance may also be checked from time to time by direct observation. All standard systems are equipped with zeroing adjustment, which can be manipulated as required.

In the case of span errors resulting from temperature change, there is a more serious problem. It is substantially impossible for an operator to compensate for such errors unless temperature correction factors or temperature correction curves are available. The use of such factors or charts involves careful determination of temperature. Naturally, it is desirable that the weighing package be provided with automatic self-compensation, avoiding all temperature errors.

Load Cell Weighing Systems The effect of temperature on load cell weighing systems is quite different from that on mechanical scales. The elimination of levers and mechanical linkages precludes errors (or compensations) arising from these members. The individual load cells must be designed for minimum effect of temperature and contain compensating devices or networks that will assure performance within specification.

Electronic Load Cells All types of load cells contain some form of load supporting member and an associated electrical component designed to detect precisely deflection of the support member under load. Deflection may be in the order of 0.001 to 0.010 in. (0.025 to 0.25 mm) or more. The electrical signal may take the form of changing current, voltage, or resistance.

The most popular electronic load cell is the strain gauge type, which changes its electrical resistance in direct proportion to the weight or force applied. Load cells involving one or more bonded, or unbonded strain gauges (semiconductor or thin-film sensors) also contain appropriate compensation networks. These networks not only correct for changing electrical characteristics due to temperature variation, but also, in most instances, for modulus changes in the support member and for other temperature related errors.

Hydraulic Load Cells Hydraulic load cells are subject to zero and span errors when subjected to varying temperature. Temperature compensation must be provided to prevent errors in output signals.

Pneumatic Load Cells Pneumatic load cells considered here are of the force-balance type. They are relatively free of temperature-related errors, provided proper care has been given to the choice of diaphragm material. It is of fundamental importance that the operating medium, whether compressed air or other gas, shall be sufficiently dry to prevent condensation of water vapor and freezing at temperatures below 32°F (0°C).

Errors Caused by Vibration

Vibration and dynamic disturbances may seriously affect weighing system performance. Accuracy, stability of reading, and frequency of maintenance are factors that may

© 2003 by Béla Lipták

be affected. Vibration can be caused by either external effects or by internal causes (e.g., impact loading).

In the case of external sources, relocation of the scale may be possible. One should select locations where the foundation is stiff and stable and where sources of vibration, such as compressors, punch presses, etc., are not present. Where foundation stability is known to be poor, one should consider methods of improving stability, such as erecting additional bracing columns, gussets, or concrete work. Consideration can also be given to the use of suitable vibration absorption or insulation material, such as Fabreeka.

Vibration caused by internal disturbances, such as those caused by loading methods, or by agitation of tank content etc., may also cause serious problems. Design consideration should be given to the loading method on all weighing systems in order to eliminate or minimize impact or shock loading. Baffle plates are frequently helpful in reducing surging and gyration of fluid contents in weighing vessels.

Most weighing systems are provided with adjustable vibration dampers. These should be maintained in good working order and adjusted for optimum scale performance under the operating conditions.

Errors Caused by Ambient Conditions

Weighing system installation frequently has to be made in areas where the equipment may be continuously or intermittently exposed to high or low temperatures, wet or humid atmosphere, corrosive or abrasive contaminants, etc. In such areas, steps should be taken to afford as much protection as possible to the weighing system. Foundation pits should always be provided with adequate drainage that will allow quick runoff and thorough drainage of the pit. Attention should also be directed to the possibility of accidental backflooding through the drain in the event of flooding in other areas.

Standard methods of protection, such as corrosive-resistant paint, electroplating, etc., may be employed. It is often practical to specify that materials and alloys unaffected by the anticipated corrosive materials be used in the manufacture of the equipment.

When conditions are particularly severe, it may be desirable to provide a small atmosphere-controlled area to house the readout instruments for the weighing system. Prefabricated structures are available for this purpose.

Maintenance Requirements

Proper and timely maintenance is most important in the operation of any weighing system. Reference should be made to manufacturer's suggested practices, and adjustments in this program should be made to accommodate special conditions.

The weighing process is frequently the basis of control for manufacturing or chemical processes. It is very important that calibration checks be made from time to time to assure accurate performance.

Where the weighing system is used for commercial purposes (i.e., buying or selling of goods or merchandise), it is the legal responsibility of the seller to maintain the accuracy and performance of the weighing equipment in conformance with local laws on weights and measures.

Installation Requirements

The main goal is to eliminate all external forces, such as wind or pipe strain effects or other causes from superimposing a force component on the weight tank, that would appear as a change in weight. These goals are achieved by stabilizing the vessel and by providing flexible joints in the connected piping.

Vessel Stabilization Stabilizing devices are mechanical elements designed to secure a weigh vessel to the structure. This allows free movement in a vertical plane and restrains lateral movements, thereby maintaining an initial alignment throughout service life. The following effects may destabilize a vessel mounted on load cells:

1. Fluid sloshing
2. Violent chemical reactions
3. Thrust and impact forces due to mass flow entering or leaving the vessel
4. Vibration of live bottoms
5. Agitators
6. Thermal expansion of attached piping
7. Structural support vibration and/or deflection
8. Wind
9. Seismic events

Stabilizing devices are also required for most weigh applications using load cells to guarantee safety and accuracy. If tank or pipe motion causes a pipe or vessel rupture, the result can be dangerous when hazardous material are being weighed. Vessel vibration, movement, or oscillation can apply side loads on load cells, causing readout errors.

Stabilizing Devices Two types of stabilizing devices have emerged to prevent the lateral movement of vessels: stay rods and safety check rods.

Stay rods are mechanical elements installed securely between a gusset on the vessel support bracket and a rigid floor bracket. Vessel translocation and rotation is restricted, while radial thermal expansion is relatively free. Installation and sizing of stay rods in a perfect horizontal plane must ensure a linear response to vertical movement. Figures 7.24p and 7.24q show typical installation of stay rods on vertical and horizontal vessels.

Safety check rods are backup elements whose function is to prevent gross vessel tipping or wobbling (Figure 7.24p).

© 2003 by Béla Lipták

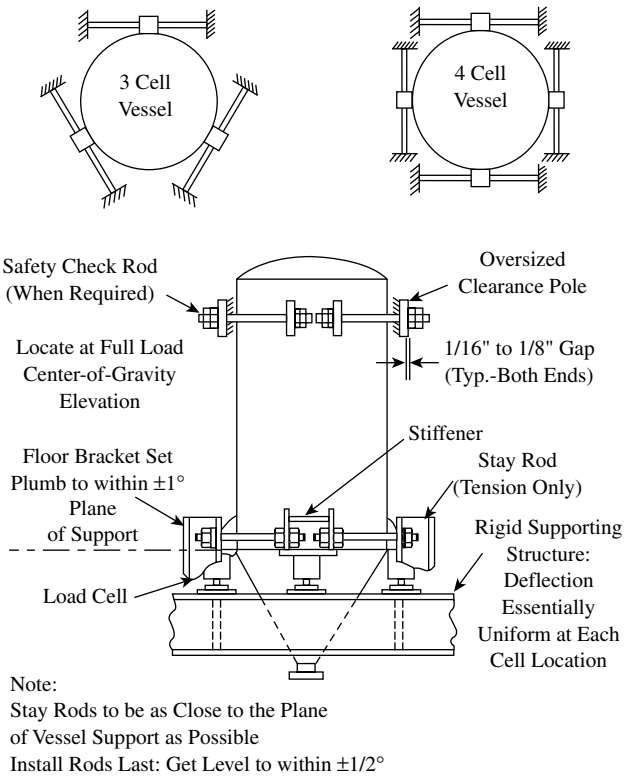

FIG. 7.24p
Typical staying arrangement.

Stay and check rod sizing and arrangements vary from application to application. The design criteria define the total acceptable vertical force generated by the deflection of all stabilizing devices expressed in percent of total load. A limit is established for the total rod elongation, minimizing significant side-loading of load cell and attached piping. The mechanical arrangement of stay and check rods to obtain optimal equilibrium depends on the center of gravity of the fully loaded vessel in relation to the staying plane.

The stay rods should not introduce any vertical force components. This is best achieved by making them completely flexible in the vertical direction. If guy ropes or rods with dual ball joints are used, it is unlikely that the weigh tank will be partially hanging on the stay rods instead of transferring all its weight to the load cells (Figure 7.24r).

Piping Connections Weigh vessels are generally connected to pipes through which materials are introduced and extracted. Any pipe directly attached to the vessel becomes an active part of the weigh system; any relative motion between the vessel and a particular pipe will generate vertical and horizontal reaction forces on the weigh vessel. The total vertical force V generated by the deflection of all piping connected to a weigh vessel should not exceed a percentage of maximum live load, proportional to the required system accuracy A in Equation 7.24(3):

$$V \le (30A)L \qquad \textbf{7.24(3)}$$

where

V = total vertical force
A = system accuracy (percent)
L = maximum live load

Types of Vertical Forces There are three types of vertical forces generated due to piping:

1. Differential motion between the pipe connecting point on the vessel and the first pipe support
2. Thermal expansion of the vertical run between the points mentioned above

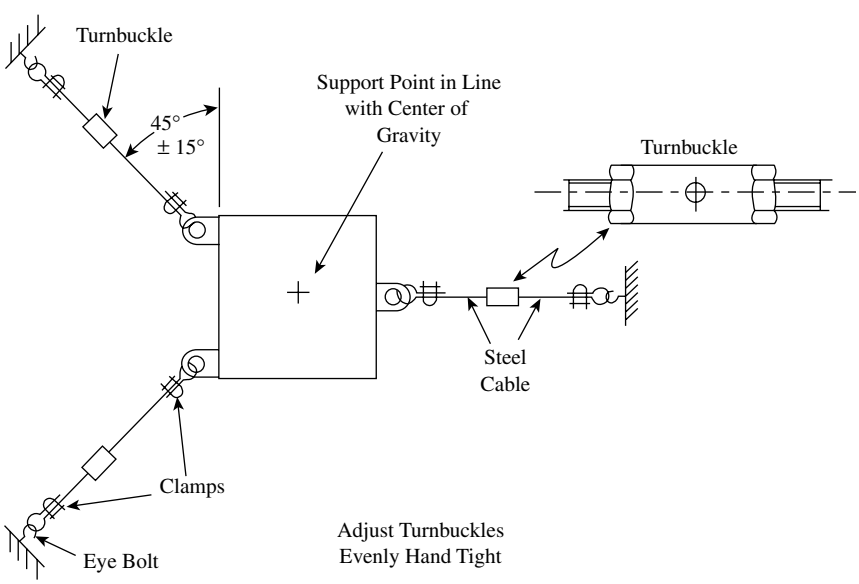

FIG. 7.24q
Staying method for suspended hoppers.

© 2003 by Béla Lipták

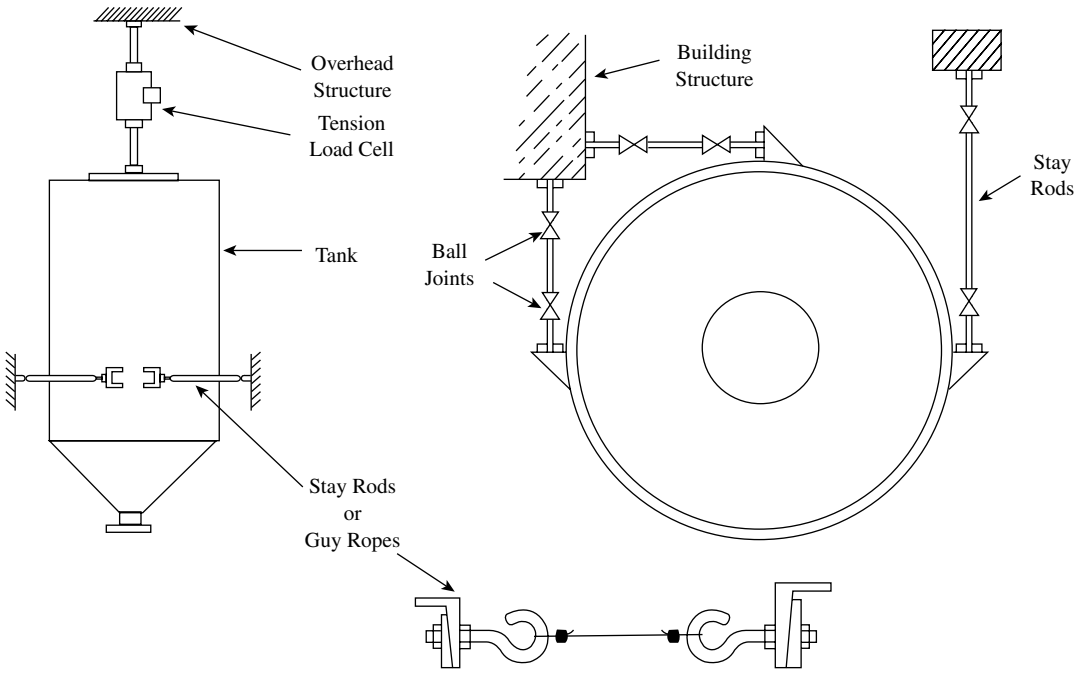

FIG. 7.24r
Three stay rods or guy ropes can protect against both clockwise and counterclockwise rotation.

3. Forces generated that tend to lift or push down the vessel as pressure varies in vertical pipes connected to the tank

In order to minimize the vertical forces associated with piping, it is recommended to mount all first pipe supports to the vessel support structure using only horizontal runs between the vessel and the first piping supports. The closest pipe support to the weigh vessel is the first support. The total vertical piping force represents the sum of individual vertical piping reactions, generated as described above. The total vertical deflection, which must be evaluated for each pipe run, is expressed in the following formula:

$$\delta V = \delta_S + \delta t_v + \delta t_p + \delta_a \qquad \textbf{7.24(4)}$$

where

δV = vertical deflection
δ_s = vessel support deflection
δt_v = vessel thermal expansion to point of pipe attachment
δt_p = pipe thermal expansion in vertical runs
δ_a = deflection of first pipe support or anchorage

Deflection tending to increase the vessel weight is given a positive sign; deflection tending to decrease the vessel weight is given a negative sign. The vertical reactions developed in one straight span of pipe in response to differential vertical motion between fixed end points are calculated by the following formula:

$$P_i = K_i \, \delta V_i \qquad \textbf{7.24(5)}$$

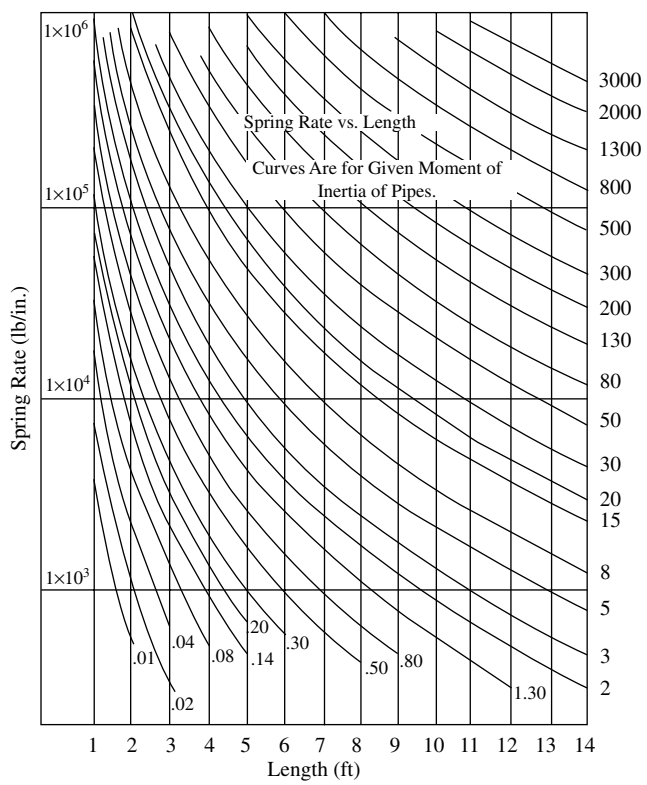

FIG. 7.24s
Pipe spring rates versus length for various moments of inertia of pipes.

where

P_i = sum of piping vertical reaction forces
K_i = spring rate or pipe stiffness
δV_i = sum of vertical deflections

© 2003 by Béla Lipták

The piping flexibility must verify the following criterion in order to achieve the required system accuracy for a given live load:

$$V = \left|\sum P_i\right| = \left|\sum K_i\ \delta V_i\right| \le (30\,A)\,L \qquad \textbf{7.24(6)}$$

where

V = total vertical force
P_i = vertical reaction force exerted by span pipe i
K_i = spring rate of span pipe i
δV_i = vertical deflection of span pipe *i*
A = system accuracy (percent)
L = maximum live load
i = n where n is the number of pipes connected to the weigh vessel. The span of pipe is assumed to be the portion of piping between the vessel connection and the first support

Spring Rates of Pipes The spring rate K for any pipe is derived from the bending formula, taking into account the moment of inertia for the pipe section under consideration. Figure 7.24s shows pipe spring rates versus length for various moments of inertia of pipes. Figure 7.24t shows spring rate versus length for schedule 40 steel pipe. If the resultant

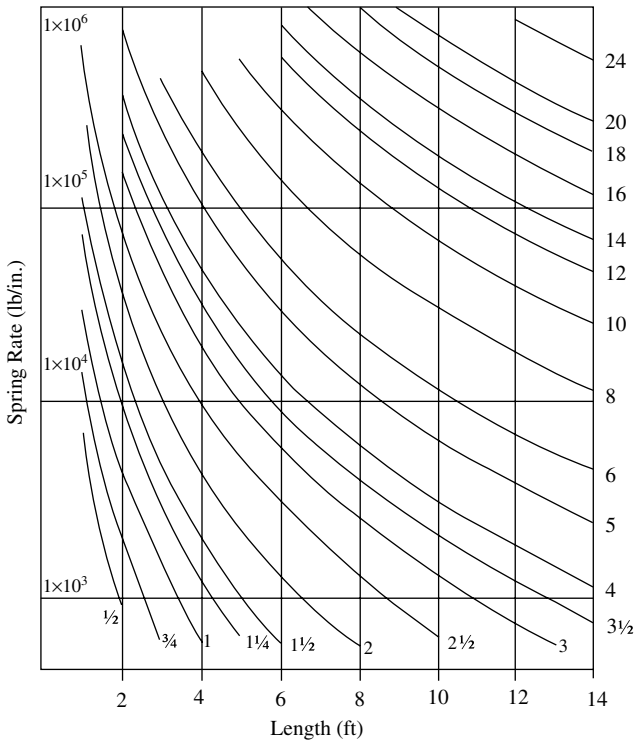

FIG. 7.24t
Spring rates for schedule 40 steel pipe.

TABLE 7.24u
Vertical Reaction Generated by a 0.25 in. (6.35 mm) End Deflection (Comparison)

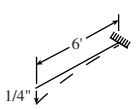

Nominal Pipe Size (mm/in.)	Steel Pipe Sch. 40 (kg/lb)	Steel Pipe Sch. 105 (kg/lb)
76.20 / 3.00	325 / 715	204 / 450
304.80 / 12.00	34.050 / 75.000	14,755 / 32,500

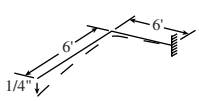

Nominal Pipe Size (mm/in.)	Steel Pipe Sch. 40 (kg/lb)	Steel Pipe Sch. 105 (kg/lb)
76.20 / 3.00	66 / 145	41 / 90
304.80 / 12.00	6810 / 15,000	2950 / 6500

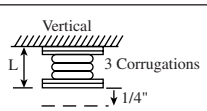

Expansion Joint—Vertical Minimum L (mm/in.)	Steel (kg/lb)	Minimum L (mm/in.)	Teflon (kg/lb)	Expansion Joint—Horizontal Minimum L (mm/in.)	Steel (kg/lb)	Minimum L (mm/in.)	Teflon (kg/lb)
238 / 9.375	123 / 270	92.10 / 3.625	27.20 / 60	238 / 9.375	329 / 725	92.10 / 3.625	47.70 / 105
356 / 14.00	141 / 310	200 / 7.875	43.10 / 95	356 / 14.00	1105 / 2435	200 / 7.875	114 / 250

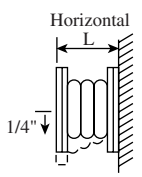

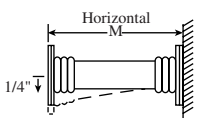

Universal Joint Minimum M (mm/in.)	Steel (kg/lb)	Teflon (kg/lb)
689 / 27.13	2.72 / 6	1.82 / 4
883 / 34.75	20.43 / 45	8.17 / 18

© 2003 by Béla Lipták

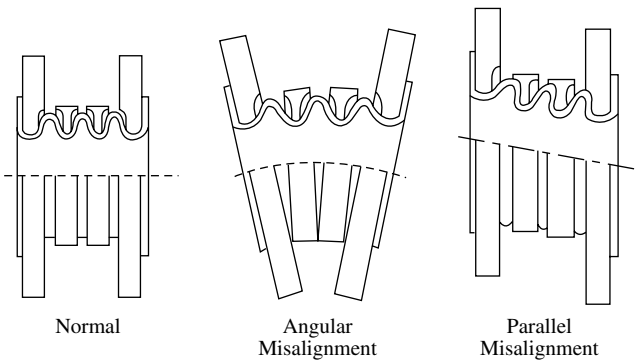

FIG. 7.24v
Flexible joints provided with Teflon liners.

vertical force exceeds the live load criterion for a required accuracy, design solutions are required to increase the piping flexibility. There are three practical ways available:

1. Reduce the pipe spring rate by choosing a different pipe schedule.
2. Introduce flexible devices whenever possible. Limitations are usually related to design pressure, temperature, and material of construction.
3. Increase the length of horizontal runs between the vessel connection and the first support. Table 7.24u presents calculated force reactions for several pipe runs and flexible devices.

Flexible Connections

When the goal is to maximize the precision of weighing, it is desirable to install all piping and electrical conduit connections in the horizontal plane. Whenever the design pressures and temperatures allow it, flexible joints should be installed in the horizontal pipes connected to the tank. For best performance, two horizontal flexible couplings can be installed in series. Flexible joints are available in metallic constriction or with Teflon liners. The flexible joints illustrated in Figure 7.24v are available in 1 to 14 in. (25 to 610 mm) sizes with pressure ratings in excess of 100 PSIG (7 bars) in all sizes and at temperatures up to 400°F (205°C).

Calibration

Most weighing systems are factory calibrated, but it is advisable to recalibrate them after installation and also periodically after start-up. The method to be used greatly depends on not only the type of weighing system involved, but also on the desired level of accuracy and on the sophistication of the available plant personnel. One summary of a list of calibration options is given in Table 7.24w. Most suppliers offer both recalibration services and also advice on calibration methods and procedures. Calibration is also discussed in the next section, which deals with weight sensors.

TABLE 7.24w
Calibration Options of Thermo BLH Listed by Level of Difficulty

				Applicable Vessels		*Equipment Required*					
*Relative Difficulty**	*Type*	*Accuracy*	*Model Structure*	*Silo*	*Mixer/ Blender*	*DVM*	*mV Source*	*mV/V Calibrator*	*Dead Weights*	*Load Cell Cal. Data*	*Special Equipment*
					Electronic Methods						
1	Push-button PROM	0.05 to 0.5%	No	Yes	Marginal	No	No	No	No	Yes	No
2	mV Simulation	0.25 to 1.0%	No	Yes	Marginal	Yes	Yes	No	No	Yes	No
3	mV/V Simulation	0.10 to 1.0%	No	Yes	Marginal	No	No	Yes	No	Yes	No
					Physical Methods						
4	Partial Deadweight	0.5 to 2.0%	Yes	Yes	Yes	No	No	No	Yes	No	No
5	Flow	0.25 to 1.0%	Yes	Yes	Yes	No	No	No	No	No	Yes
6	Applied Force	0.25 to 1.0%	Yes	Yes	Yes	No	No	No	No	No	Yes
7	Full Build-Up	0.05 to 0.2%	Yes	Yes	Yes	No	No	No	Yes	No	No
8	Full Deadweight	0.02 to 0.1%	Yes	Yes	Yes	No	No	No	Yes	No	Yes

* 1 = least difficult, 8 = most difficult

© 2003 by Béla Lipták

Bibliography

Brecker, S., "Ten rules for installing a belt scale," *Powder and Bulk Engineering*, September 1996.

Cadou, P. and Homer, C., "Flat-Belt Weigh Feeder Accuracy: How to Achieve It, Maintain It, and Verify It," *Powder and Bulk Engineering*, September 1997.

Colijn, H., Ed., *Weighing and Proportioning of Bulk Solids*, Zurich: Trans Tech Publications, 1983.

Hollander, D., "Weighing in with Bolt-On Sensors," *InTech*, December 1989.

Keil, S. and Hellwig, R., "Minimize Weighing Error through Proper Load Cell Installation," *InTech*, January 1987.

Kemény, T., Ed., *Weighing and Force Measurement in the 90's*, Portland, OR: IMEKO TC Events Series, 1991.

Morris, H.M., "Measuring Force in Difficult or Varying Environments," *Control Engineering,* September 1978.

National Bureau of Standards "Specifications, Tolerances, and Other Technical Requirements for Weighing and Measuring Devices," *Handbook 44*, Washington, D.C., 1979.

Norden, K.E., *Handbook of Electronic Weighing,* New York: John Wiley & Sons, 1998.

Omegadyne, Inc., *Omegadyne Pressure, Force, Load, Torque Databook*, Sunbury, OH, 1996.

Samuels, F.L.N., "Community Legislation and Its Impact on European Weighing Equipment Manufacturers," South Yorkshire Joint Trading Standards Committee Conference, London, 1990.

Scale Manufacturers Association, "SMA Standard for Shock and Overload Protection of Scales," 1st ed., SMA SOP 04-99, Naples, FL, 1999 (www.scalemanufacturers.org; available for download).

Scale Manufacturers Association, "SMA Recommendation on Electrical Distrubance," 1st ed., SMA RED 04-99, Naples, FL, 1999 (www.scalemanufacturers.org; available for download).

Scale Manufacturers Association, "SMA Standard for Scale Serial Communication Protocol, Levels #1 and #2," 1st ed., SMA SCP 04-99, Naples, FL, 1999 (www.scalemanufacturers.org; available for download).

Scale Manufacturers Association, "SMA Provisional Standard for Load Cell Standardization," 1st ed., SMA LCS 04-99, Naples, FL, 1999 (www.scalemanufacturers.org; available for download).

Shapiro, B.H., "Strain Gauge Transducers Show Long Term Stability," *Control Engineering*, Vol. 31, No. 2, 1984.

Stefan, K. and Hellwig, R., "Minimize Weighing Error through Proper Load Cell Installation," *InTech*, January 1987.

Stein, P., Kemény, T., and Haurilla, K., "Golden Book of Strain Gauges and Load Cells," Hauppauge, NY: Nova Science Publishers, 1991.

Vervuren, W., "Load Cells and Their Environment," *Weighing and Force Measurement in the 90's*, Kemény, T., Ed., Portland, OR: IMEKO TC Events Series, 1991.

Weiler, W.W., "A New Method and Equipment for the Calibration of Weighing Machines and Force Measuring Devices," *Weighing and Force Measurement in the 90's*, Kemény, T., Ed., Portland, OR: IMEKO TC Events Series, 1991.

Wieringa, H., Ed., *Mechanical Problems in Measuring Force and Mass,* Dordrecht: Martinus Nijhoff Publishers, 1986.

Yeager, B., "How to troubleshoot your electronic scale," *Powder and Bulk Engineering*, September 1995.

© 2003 by Béla Lipták

7.25 Weight Sensors

H. A. MILLS, H. E. LOCKERY (1969, 1972, 1982) **T. KEMÉNY, B. G. LIPTÁK, J. LUKAS** (1995)
B. G. LIPTÁK (2003)

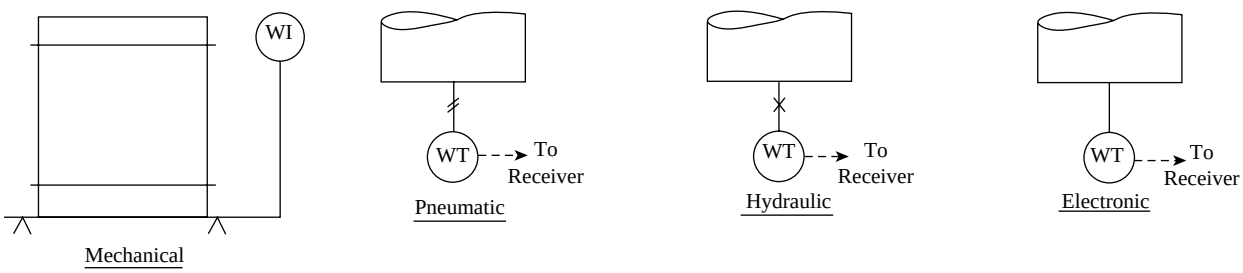

Flow Sheet Symbols

Types:

A. Mechanical (lever, spring)
A1. Laboratory
A2. Industrial
B. Hydraulic load cells
C. Pneumatic load cells
D. Electronic load cells
D1. Strain gauge
D2. Piezoelectric
D3. Piezoresistive (semiconductor)
D4. Capacitance
D5. Inductive
D6. Reluctance
D7. Magnetostrictive
D8. Nuclear
E. Feeders (screw, belt, gravimetric, nuclear, and loss-in-weight; see Section 2.23)

Operating Temperature Ranges:

A1. Ambient
A2. –10 to 135°F (–23 to 57°C)
B, C. 0 to 125°F (–18 to 52°C)
D. Normally from –4 to 160°F (–20 to 70°C); special units are available for –4 to 450°F (–20 to 230°C)

Ranges:

A1. From 0–3 g to 0–150 kg
A2. From 0–1 to 0–1,000,000 lbm (0–0.5 to 450,000 kg)
B. 100 to 1,000,000 lbm (45 to 450,000 kg)
C. 10 to 10,000 lbm (4.5 to 4500 kg)
D. From 0–1 to 0–12 million lbm (0–5 to 0–4.5 million kg)

Inaccuracy:

A1. Readability of a 0- to 3-g range can be as low as 0.1 μg; for a 0- to 150-kg range, the readability is 50 g.
A2. From ±0.01 to ±0.1% of full scale

© 2003 by Béla Lipták

B, C. From ±0.1% to ±1% of full scale
D. 0.03 to 0.25% of full scale

Costs:

A1. The cost of laboratory balances is a function of their precision. Units with 0.1% readability can be obtained for $100 to $300; with 0.01% readability, for $500 to $1000; and with 0.001% readability or better, for $1000 to $4000. Microprocessor-based balances with microgram readability can cost up to $10,000.
A2. Highly variable with application but usually in excess of $5000.
B, C. From $750 to $1500 per load cell or totalizer; $500 to $1000 per high-precision pressure gauge readout. Costs for electronic pressure transmitters range from $1000 to $2000.
D. Load washers, low-profile load cells, and compression load buttons cost from $500 to $1200; universal load cells for higher loads cost $2000 to $3500; remote display costs range from $500 for a standard indicating transducer to $2500 for an 8-channel unit. A strain gauge telemetry transmitter with FM output costs $1800. A complete batch weighing control system, depending on its complexity, will cost from $10,000 to about $25,000. A nuclear continuous weigh scale costs about $10,000.
E. Feeders (screw, belt, gravimetric, nuclear, and loss-in-weight; see Section 2.23)

Electronic Load Cells

Overload Limitations: Up to 125% of rating including shock, impact, or static loading

Nonrepeatability: Generally from 0.01 to 1%

Nonlinearity: Generally from 0.03 to 2%

Hysteresis: Generally from 0.02 to 2%

Output Signals: 2 to 3 mV per volt of excitation. Excitation voltage is usually around 10 V.

Mechanical Configurations: Canister (longitudinal tension or compression stress); cantilever (bending stress); shear

Design Materials: For high capacities, the load (spring) elements are usually steel alloys, while for low capacities, aluminum alloys are used. The strain sensing grid can be constantan, Karma, Isoelastic, or platinum tungsten. The strain gauge backings include polyamides, epoxies, or reinforced epoxies. The bonding adhesive is often cyanoacrylate.

Partial List of Suppliers:

ABB Inc. (D) (www.abb.com/us/instrumentation)
Acculab (A1) (www.sensornet.com)
A & D Weighing (A1) (www.andweighing.com)
Bacharach (B) (www.bacharach-europe.com)
Cardinal Scale Mfg. (A1, A2, D) (www.cardinalscale.com)
Carson Co. (A1)
Condec (D) (www.4condec.com)
Daytronic Corp. (D) (www.daytronic.com)
W.C. Dillon & Co. (B) (www.dillon-force.com)
Fairbanks Scales (D) (www.fairbanks.com)
Flow-Tech Inc. (D) (www.flowtechonline.com)
FMC Blending (D) (www.fmcblending.com)
Futek Advanced Sensor Tech. (D) (www.futek.com)
Global Weighing (D) (www.global-weighing.com)
Graybar Electric Co. (D) (www.graybar.com)
GSE Scale Systems (D) (www.gse-inc.com)
Hardy Instruments (A2) (www.hardyinst.com)
Hottinger Baldwin Measurements–HBM Inc. (D) (www.hbmhome.com)
Helm Instrument Co. (D) (www.helminstrument.com)
Hi-Speed Checkweigher (D) (www.highspeedcheckweigher.com)
Kistler-Morse Corp. (D) (www.kistlermorse.com)

© 2003 by Béla Lipták

Measurement Specialties (D) (www.msiusa.com)
Mettler-Toledo Inc. (D) (www.mt.com)
Michelli Schales (www.michelli.com)
Oahus (A1) (www.scalesgalore.com)
Omega Engineering (D) (www.omega.com)
PCB Piezotronics (D) (www.pcb.com)
Precisa (A1) (www.precisa.com)
Revere Transducers Inc. (A2) (www.reveretransducers.com)
Rice Lake Weighing (D) (www.rlws.com)
RST Instruments Ltd. (B) (www.rstinstruments.com)
Sartorius (A1, D) (www.sartorius.com)
Schneider Electric (D) (www.squared.com)
Scientech Inc. (A1) (www. scientech-inc.com)
Sensotec (D) (www.sensotec.com)
Setra Systems Inc. (A1) (www.setra.com)
Siemens Energy & Automation (D) (www.sea.siemens.com)
Smoot Co. (D) (www.smootco.com)
Terraillon (A1) (www.terraillon.com)
Thermo BLH (D) (www.blh.com)
Thermo Ramsey (D) (www.thermoramsey.com)
Transducer Techniques (D) (www.transducertechniques.com)
Weight-Tronix (D) (www.wtxweb.com)
Worchester Scale Co. (A2) (www.worcscale.com)

(The majority of the load cells on the market are Type D1; a few types B, D2, D3, and D4 designs are also available; most others are outdated or discontinued.)
(The most popular suppliers are Mettler-Toledo, Thermo BLH, Weight-Tronix, Kistler-Morse, and Rice Lake in that order.)

INTRODUCTION

The more general aspects of weighing were discussed in the previous section (7.24), while the subjects of rate-of-weight measurement and gravimetric feeders were covered in Section 2.23. This section is devoted to the discussion of the detectors used in the measurement of stationary weights, whether in the laboratory or in general industry. The types of sensors discussed include the mechanical lever scales and the hydraulic, pneumatic, or electronic load cells. Naturally, because of their popularity, more space is devoted to electronic load cells than the others, and within that group, the emphasis is placed on the most popular design—the strain gauge type load cell.

The section begins with a general discussion of load cell selection and installation. This is followed by the description of the individual designs and ends with a fairly extensive bibliography of recommended reading material for readers who need more in-depth or more application oriented information.

The use of mechanical, hydraulic, and pneumatic weight sensors is declining in most areas except in the laboratory, where high-precision mechanical balances are still widely used. However, even in the case of these devices, electronic sensors are often used to operate digital displays or to provide memory and computer compatibility. In industrial application, mechanical platforms or truck scales are often combined with electronic load cells to operate remote displays or to provide computer compatibility.

The description of mechanical, hydraulic, and pneumatic designs are followed by the discussion of electronic load cells—their design variations, features, accessories, and the more recent advances that have occurred in their designs. The discussion begins with the topic of strain gauge-type load cells. The reader should be aware that strain-gauge-type sensors, circuits, and electronics have already been discussed in other sections of this volume (Sections 5.7, 7.19, and 7.21). For this reason, some of the points that were already made will not be repeated here.

LOAD CELL SELECTION

Concepts and selection procedures for weigh systems based on load cells are focused on accuracy and repeatability of measurements of relatively large loads within a variety of constraints imposed by shape and vessel sizes, structural and mechanical arrangements, materials to be weighed, and environmental conditions. Here we present some established criteria for load cell selection—design concepts used in load cell installation. For an analysis of the impact of piping arrangements, mechanical equipment, and structural deformation on total weigh system performance, refer to Section 7.24.

To obtain the best performance in designing a load cell based weighing system, consideration must be given both to the selection of the load cells (Table 7.25a) and to the choice

© 2003 by Béla Lipták

TABLE 7.25a
Load Cell Performance Comparison

Type of Load Cell	*Weight Range*	*Inaccuracy (FS)*	*Applications*	*Advantages*	*Disadvantages*
Mechanical Cells					
Hydraulic	Up to 10,000,000 lb	0.25%	Tanks, bins, and hoppers; hazardous areas	Takes high impacts; insensitive to temperature	Expensive, complex
Pneumatic	Wide	High	Food industry; hazardous areas	Intrinsically safe; contains no fluids	Slow response; requires clean, dry air
Strain Gauge Cells					
Bending beam	10–5,000 lb	0.03%	Tanks; platform scales	Low cost, simple construction	Strain gages are exposed, require protection
Shear beam	10–5,000 lb	0.03%	Tanks, platform scales, off-center loads	High side load rejection, better sealing and protection	
Canister	to 500,000 lb	0.05%	Truck, tank, track, hopper scales	Handles load movements	No horizontal load protection
Ring and pancake	5–500,000 lb		Tanks, bins, scales	All stainless steel	No load movement allowed
Button and washer	0–50,000 lb 0–200 lb typ.	1%	Small scales	Small, inexpensive	Loads must be centered; no load movement permitted
Other Types					
Helical	0–40,000 lb	0.2%	Platform, forklift, wheel load, automotive seat weight	Handles off-axis loads, overloads, shocks	
Fiber optic		0.1%	Electrical transmission cables; stud or bolt mounts	Immune to RFI/EMI and high temps; intrinsically safe	
Piezoresistive		0.03%		Extremely sensitive; high signal output level	High cost; nonlinear output

of load cell installation assemblies. A correctly designed weighing system must have the following characteristics:

1. Low deflection (typically 0.005 to 0.008 in., or 0.125 to 0.2 mm): permitting process piping to be attached to the weighed vessel
2. Excellent repeatability: ±0.002% of full scale, or better, within a prescribed temperature range
3. Accuracy: Ranges from 1 to better than 0.05% of full scale

Selection Factors

The following factors should be considered when selecting load cells.

Mode of Loading: Tension or Compression This choice is determined by the type and capacity of the vessel and by structural and mechanical design criteria. It is proven by experience that tension support for very large tanks or hoppers is more difficult to design and is more costly than a

© 2003 by Béla Lipták

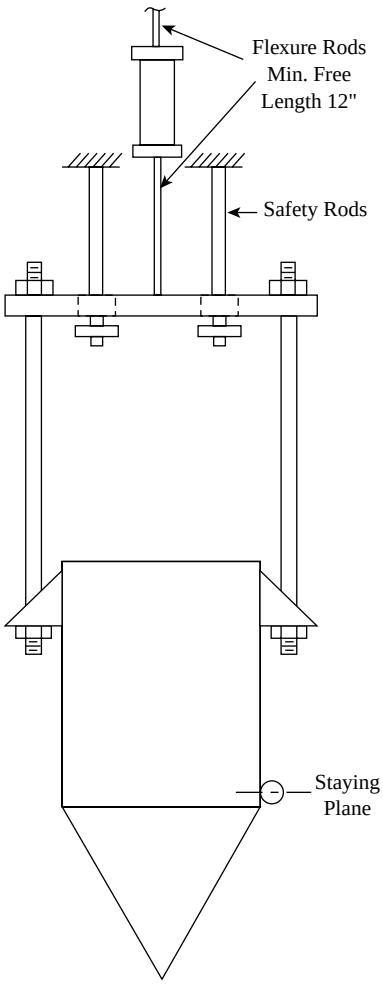

FIG. 7.25b
Suspended tank installation detail, load cell in tension (electric cell only).

compression support. In addition, tension load cells with female threads on both ends and the need for eyes and rods require greater vertical clearances. A single load cell (Figure 7.25b) supporting a small tank in tension is stable and less expensive than a multiple compression support. A weight of maximum 20,000 lb (9000 kg) load usually limits the tension mounting applicability.

Ambient Temperature The compression load cell assembly will require low friction expansion assemblies in order to accommodate differential thermal expansion or contraction between vessel and supporting structure. The tension load cell assembly does not require additional accessories for expansion compensation. The adjustment of flexure rods, which are part of the standard tension mounting assembly, will compensate for differential thermal expansion between vessel and structure.

Lateral Restraints Lateral restraints on vessel movements are frequently required when a compression assembly is chosen. In a tension assembly, lateral restraints are not required for vented vessels, which store, for instance, dry, nonhazardous materials, since a hanging mass is inherently stable.

Structure Vibrations Tension assemblies are more sensitive to vibration because of reduced structural stiffness and dampening capability caused by tension linkages. The compression assemblies' sensitivity to vibration is a function of the stiffness of the structure and vessel supports.

Number of Load Cells

The number of load cells required is determined by the plane view geometry of the supported structure—hopper, tank, or silo. The main considerations include cost and accuracy. Cost can obviously be reduced by lowering the number of load cells used. On the other hand, if a load cell is not placed under each point of support, the total load is not being measured; therefore, if the load distribution is not symmetrical between points of support, the reading will be in error. Three points fully define a plane, so the ideal number of supports for uniform load distribution is three.

Positioning can have an effect on number of cells required; for example, a vertical circular tank might require three cells (Figure 7.25c), while the same tank in a horizontal position might require four cells (Figure 7.25d). Considerations must

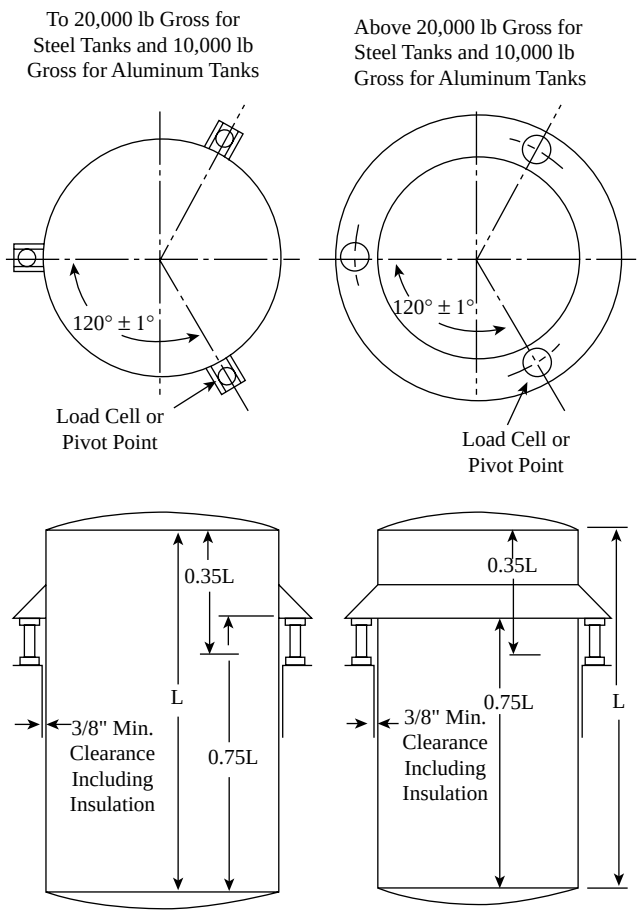

FIG. 7.25c
Load cell locations for vertical vessels.

© 2003 by Béla Lipták

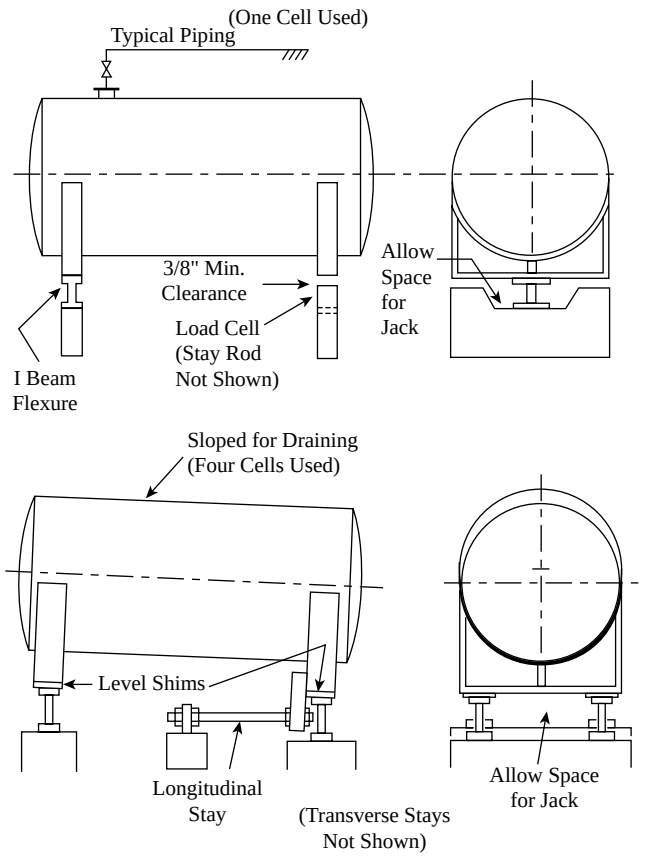

FIG. 7.25d
Load cell and stay locations for horizontal tanks.

also be given to the strength and rigidity of the weigh-bridge structure. Horizontal dimensions in excess of 25 ft (7.5 m) may increase the number of load cells needed. Related to the number of load cells required are two additional factors: capacity and degree of precision required.

When a load is supported from more than one point, pivots or flexures can replace some of the cells, depending on the symmetry of the load, at the expense of overall accuracy expected. Vertical vessels with supports above the center of gravity may use three cells instead of one cell and two pivots. Three cells give more accuracy but cost more. Instead of four cells, a horizontal vessel can use a flexure and two cells or a flexure and one cell. The use of a flexure reduces the staying requirements but with some loss of accuracy.

Capacity and Type

The minimum load cell capacity can be calculated with the following formula:

$$C = 1.25\ K\ \frac{W_T + W_N}{N} \qquad \textbf{7.25(1)}$$

where

C = minimum load cell capacity
1.25 = allowance factor for low tare estimates and unequal load distribution on the load cells as installed
W_T = tare weight of the empty vessel
W_N = net weight of projected vessel content (live load)
N = number of load cells
K = dynamic factor (K = 1.25 for certain dynamic loads, otherwise K = 1)

When calculating the tare weight of the empty vessel, one must include any additional equipment attached to the vessel, such as agitators, valves, and filters, that contributes to the weight that the empty vessel (including its accessories) will exert on the load cells.

Examples of anticipated dynamic loads are vessels with crane buckets and vessels with horizontal agitators. Assuming for these cases K = 1.25, one can provide an extra capacity for sizing, resulting in a higher capacity load cell selection. A higher capacity load cell will perform better under repeated impact loads or high cycle fatigue.

Load Cell Types A selection must be made between hydraulic and electric load cells. Hydraulic load cells can be considered for large vessels when the required accuracy is low (within 0.25 to 1%). Hydraulic load cells are rugged and require low maintenance, and their cost is reasonable. On outdoor installations where temperature changes are drastic, heated enclosures are necessary. Electric load cells are more expensive, but are the most accurate and trouble-free. Inaccuracy is as low as 0.1% and can be even lower depending on mounting, staying, and piping factors.

Classes of Load Cells Manufacturers offer the following classes of load cells: general purpose, precision, high-temperature environment, corrosive environment, and rugged design.

General-purpose load cells may be used in any service (tension or compression) whenever weigh system accuracy required is not better than 1%. Precision load cells are specified in systems where accuracy is expected to be 0.1% or better. Specially designed load cells using adequate materials of construction are utilized in a high temperature environment (maximum 450°F, or 232°C). Precision and high-temperature load cells have temperature compensation accessories that make the operation unaffected by temperature variations within the compensation range (15 to 115°F, or –10 to 46°C, for general purpose and precision, and 15 to 425°F, or –10 to 218°C, for high-temperature design).

Load cells can be protected with a special coating in order to prevent deterioration due to the presence of corrosive chemicals. Rugged load cells are offered whenever mechanical shocks may affect their performance.

LOAD CELL INSTALLATION

Load cells measure all vertical forces acting upon the vessel. Forces other than the weight of the vessel and contents must be kept small, elastic, and repeatable so that their effect can be removed by field calibration.

© 2003 by Béla Lipták

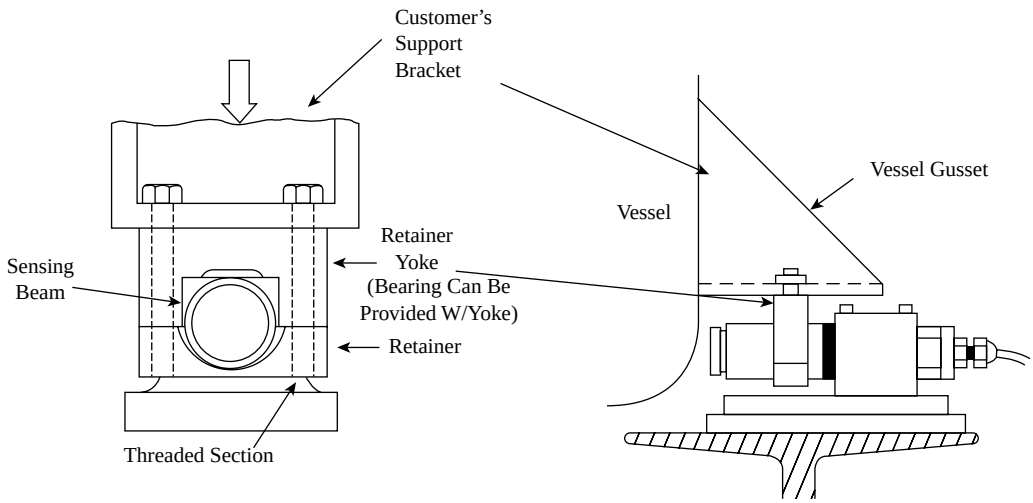

FIG. 7.25e
The cantilever-type load cell requires less restraining of the weighed tank.

The general rules for load cell and vessel arrangements are:

1. The vessel structure in the area of the load cell mounting must be rigid.
2. The supporting structure or foundation, depending upon the loading mode (tension or compression), must be rigid. If more than one vessel is to be supported on the same structure, the structure must be designed with sufficient rigidity to prevent interaction errors caused by large deflections.
3. On multiple load cell arrangements, the load cells must be positioned and should be installed so that after the vessel is fully loaded each cell will carry not more than 120% of rated capacity.
4. Optimal vessel stability requires flexibility in the vertical plane and rigidity in the horizontal plane.

Some load cell designs can tolerate more horizontal movement; these designs require less restraining of the vessel movement than others. In general, it can be said that the cantilever beam-type load cell requires less restraining. The cantilever load cell is illustrated in Figure 7.25e. It is connected to the weighed vessel through the retainer yoke, which encircles the sensing beam of the cantilever load cell. Therefore, when this type of load cell is used, the weigh tank is securely held in place and often does not require additional restraining.

If the weigh tank is expected to undergo thermal expansion, bearings can be provided with the retainer yoke to accommodate the movements caused by thermal expansion. Naturally, in case of outdoor installation of tall vessels where heavy winds can create extreme forces, restraining is still necessary.

The canister type of load cell is illustrated in Figure 7.25f. When this type of load cell is used, the weigh tank must always be stabilized (restrained). Most of the discussion that follows assumes the use of canister-type load cells.

Load Cell Adapter

As already noted, many load cell based weighing installations involve large differential expansions that can impose severe horizontal forces on the installed load cells. Also, in vehicle scales, large horizontal forces can be applied owing to deceleration and acceleration forces associated with bringing the vehicle on and off the scale. The load cell adapter described here virtually eliminates such forces.

Primarily a mechanical arrangement, the active weighing platform is suspended from the top of the load cell by three suspension links (Figure 7.25g), and an upper plate and adapter ring contact the load cell at the desired loading point. The upper plate carries the three links by link pins projecting radially from the upper plate. Hanging on the opposite end of the links is the lower plate that includes three additional link pins for engaging the lower end of the links.

The lower plate is connected to the active weighing platform, thereby transmitting the weight through the links and upper plate to the top of the load cell. The load cell is supported by a base plate, that rests on the foundation or ground structure. The base plate also serves to absorb heavy side loads when the horizontal deflection of the weigh-bridge exceeds the clearances provided between the base plate and the cutout portion of the lower plate. The height of the adapter assembly can be adjusted by a center screw, enabling the equal distribution of total load among the several load cells in a given installation.

The structure provides a highly flexible load cell adapter assembly, which transmits virtually no side loads to the load cell caused by differential expansion of the weighing structure relative to the ground structure. The side loads that are transmitted to the load cell are from weigh-bridge deflections, imposing angular loads on the load cell. These are minimized by appropriate structural design of the weigh-bridge.

© 2003 by Béla Lipták

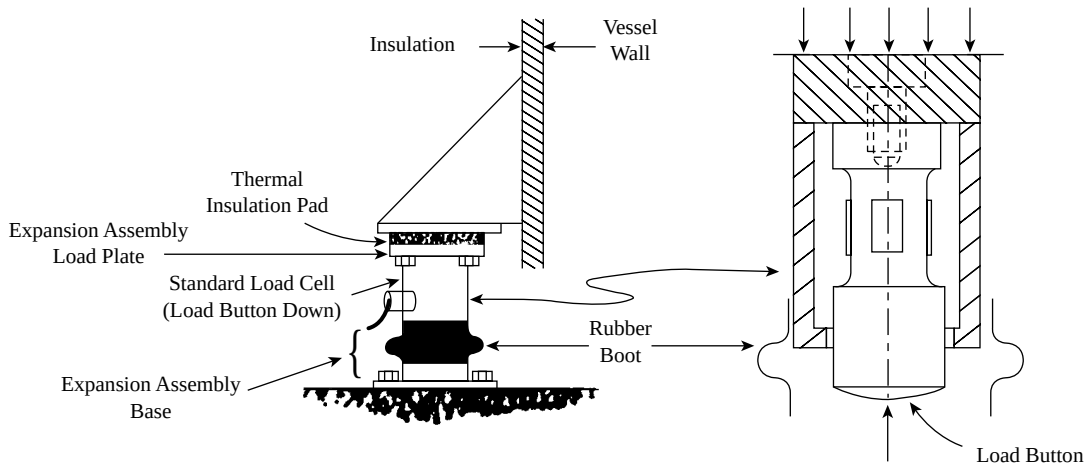

FIG. 7.25f
Weigh tanks with canister-type load cells always require restraining.

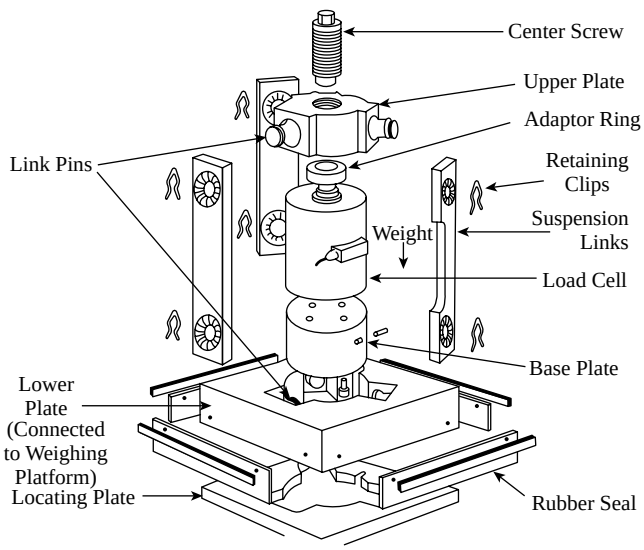

FIG. 7.25g
A load cell adapter.

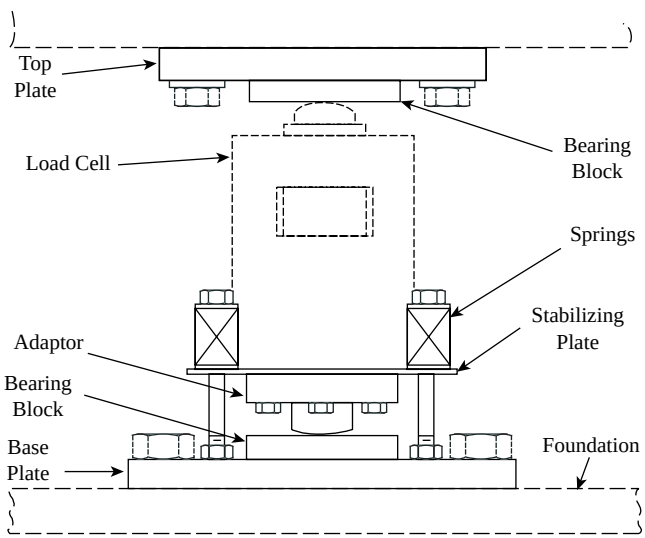

FIG. 7.25h
Rocker assembly.

Rocker Assembly

Another load cell adapter used in the past in weighing systems was the rocker assembly (Figure 7.25h). An adapter is added to the bottom of the load cell, which in effect provides a convex loading surface on both the bottom and top of the unit. The load cell and adapter are located in place by a stabilizer plate. Load is introduced to the load cell through the upper bearing block and transmitted through the load cell and the lower bearing block to the mounting plate. The stabilizer plate allows partial rotation of the load cell, while at the same time restricting excessive lateral motion.

Differential expansion between the structure being weighed and the foundation causes slight rotation of the load cell, reducing the magnitude of the horizontal forces, which would have been present in the absence of the rocker assembly. The load cell is thus protected from the adverse effects of large lateral forces caused by differential expansion in multiple cell weighing systems. While found in existing installations, the spring-loaded stabilizing plate has not been a successful solution and is seldom used on new installations.

Vessel Expansion

Temperature variations can cause the vessel or the supporting structure to contract or expand. Under these circumstances, load cells are subjected to horizontal loads resulting in weighing errors. Whenever the mode of loading is compression, one can minimize the expansion/contraction effect by adapting the following solutions.

© 2003 by Béla Lipták

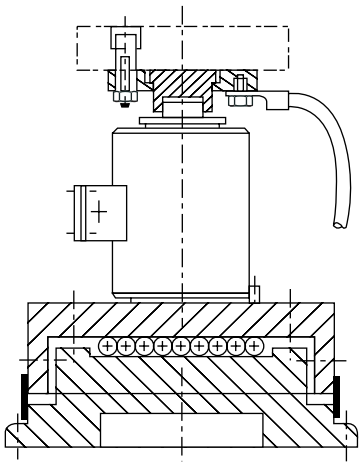

FIG. 7.25i
Vessel movement due to thermal expansion can be accommodated when a self-aligning strut bearing is provided above the load cell, with a multiple ball bearing below.[1]

I-Beam Flexure I-Beam flexures are short lengths of standard I-Beams used to provide flexible support for weigh vessels. I-Beam flexures bend through very small angles about their web and allow slight motion perpendicular to the web. The flexures mounted as supports can accommodate lateral movement up to 0.010 in. (0.25 mm). I-Beam flexures are utilized in weigh systems where load cells sense only a portion of the tank weight (Figure 7.25d). This arrangement is commonly used for weighing liquids where an accuracy of 0.5% or less is acceptable.

Expansion Assemblies These assemblies are, in principle, sliding bearing units that have a low coefficient of friction and can move laterally within ±3/8 in. (9.5 mm). Figure 7.25i illustrates a self-aligning strut bearing installation that is well suited for minimizing the effect of vessel movement due to thermal expansion.

Load cells used outdoors in areas subjected to large temperature variation should be provided with expansion assemblies. In cases where the mode of loading is tension, flexure rods are used (Figure 7.25b). Flexure rods link the load cell with the structure in a tension weighing arrangement; the flexure rod had tensile strength of approximately 90,000 PSI (621 MPa) and can accommodate deflection of ±3/32 in. (2.3 mm).

MECHANICAL LEVER SCALES

All mechanical lever scales employ lever systems that balance the weight of the unknown (gravity pull) against a known (calibrated) lever and mass: it is, in fact, a balancing of one moment against another. It is customary to adjust the lever system so that the pull from the unknown will fall within a convenient range—usually 25 to 50 lb (11 to 23 kg).

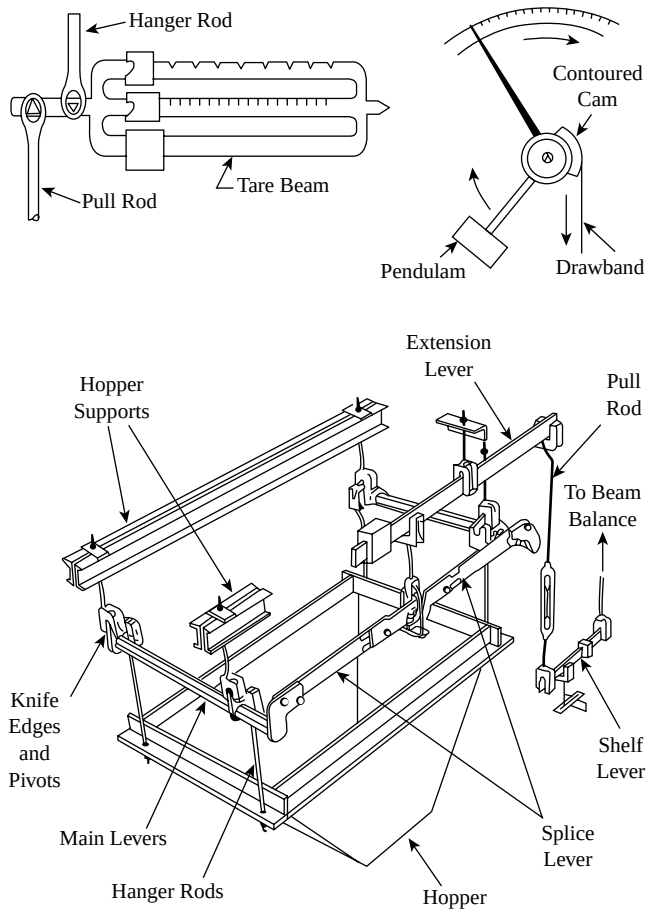

FIG. 7.25j
Typical counterbalancing devices, and typical mechanical lever scale installation.

The unknown mass includes the mass of the bin, hopper, or platform holding the material to be weighed. A tare device cancels out these weights by balancing them. In Figure 7.25j, the hopper, hopper supports, gathering levers, hanger rods, and the pull rod leading to the counterbalancing means, or balance device, are shown for a typical industrial scale. In the same figure, two widely used balancing devices—the tare beam and the pendulum—are also shown.

Balancing Devices

The most often used mechanical scales transmit the load by levers. For the different moving connections, such as the fulcrum, knife-edge bearings were traditionally used. More recently these have been replaced by V-grooves to receive the knife-edge or by ball bearings or plate-fulcrum elements. The mechanical balance can be established by moving poises on a weigh-beam, by helical springs, or by the rotation of pendulums. In the latter designs, oil-filled cylindrical dashpots are included to dampen the oscillation.

The tear beam (top left in Figure 7.25j) is usually an array of three smooth bars, each marked off linearly, and each carrying a poise. One beam is for balancing out tare weight;

© 2003 by Béla Lipták

TABLE 7.25k
Types of Mechanical Scales Used in Industry and Their Typical Ranges

Type	*Typical Capacity* lbm/kg
Even-arm scale	5/2.26
Bench dial scale	200/90
Platform scale	1500/680
Floor scale	6000/2720
Overhead scale	12,000/5443
Suspended hopper scale	25,000/11,345
Truck scale	100,000/45,400
Railroad track scale	400,000/181,800

it may not be calibrated. Another is for balancing out hundreds (or perhaps thousands) of pounds; it carries a rather heavy poise. The third is calibrated to balance out tens and units, and its poise is one-tenth the weight of the hundreds poise. The total moment exerted by the beam is the sum of the three. Balance is indicated by the position of the free end of the beam, usually guided within a trig loop.

The pendulum (often a double pendulum for greater stability and accuracy) employs a heavy mass swinging around a horizontal pivot (top right of Figure 7.25j); the moment is proportional to the displacement of the mass in a horizontal direction. This displacement is indicated on a circular scale. Linear calibration is provided by the use of a contoured cam and a draw-band. Tare corrections are made with a tare beam.

Scale Ranges

A few of the most widely used types of industrial scales, and their typical ranges are listed in Table 7.25k.

Applications

Mechanical lever scales are used in virtually every phase of industry, in development and in scales. The greatest scope for their application is probably in the weighing of stationery objects or quantities of material. Such scales may have almost any capacity, and can accommodate loads of almost any material. Overhead track scales, motor truck scales, and railroad track scales are all forms of mechanical lever scales.

Great many moving-body scales are also used. Vehicles in motion (trucks, railroad cars, etc.) can be weighed on mechanical lever scales if their velocity is low—usually less than 5 mi/h (8 km/h). Such scales usually employ pendulum counterbalances, indicating on a dial for easy reading.

Gravimetric Feeders Granular materials are conveniently weighed on conveyor-belt scales. A short section of conveyor belt is built into the scale mechanism, with tare adjustment to balance the scale with the belt empty; the balancing device then indicates the weight of the material on the belt.

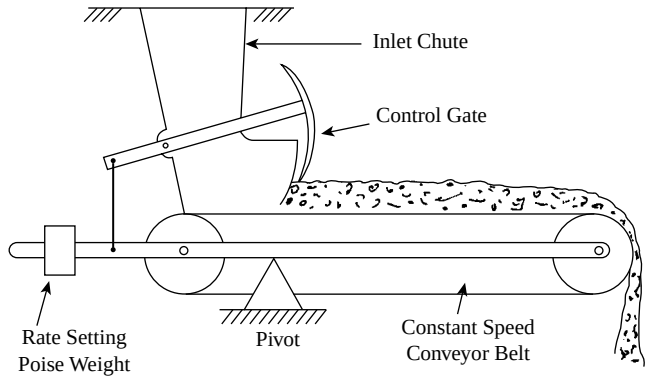

FIG. 7.25l
Early design of a belt-type gravimetric feeder.

An extension of this is the integrating weighing device. The belt is driven at a known speed; the total amount of material delivered is readily computed from the duration of the operation and the average weight of material on the belt. Accuracy is improved if the amount of material on the belt is kept uniform and constant.

Granular material can be conveniently supplied at a known rate by a conveyor-belt scale. The feed rate to the belt is controlled by the balance device; the load on the belt is thus kept constant (Figure 7.25l). Under such conditions, the feed rate can be manipulated by adjusting the speed of the belt.

Batch Additives Many industrial processes require the weighing of batches of material individually; others require the weighing of a series of materials for later mixing or other treatment. Batches of constant size are readily weighed into a hopper, using beam scales, with the position of the beam indicating when the feed should be stopped.

A series of quantities of materials can be weighed into the same hopper; this is most readily done with a dial-type scale (although a series of balance beams, dropped into position in succession, can also be used). The dial pointer positions for each added material are made to actuate gates to stop the flow of each material when the required weight is reached. Pointer positions are detected by various means: photoelectric pickups, reed switches, etc. Similar devices are used to sense balance-beam position.

Output Signals While many scales provide only a visual indication of balance, many electrical output devices are available. The simplest of these are cutoff devices, which indicate only when a desired weight (or each one of a series of weights) has been reached. There are also transducers that are attached to dial-scale pointers; these provide a continuous electrical output that can be fed into computer controls to perform sophisticated functions.

Advantages and Limitations

Mechanical lever scales are notable for long-time accuracy, with proper maintenance; they are also quite resistant to most environmental conditions. They are available in an extremely

© 2003 by Béla Lipták

wide range of capacities and forms; they are available in sizes ranging from quite small to a railroad-track scale more than 100 ft (30 m) long. They can readily be made a working part of other industrial devices; in fact, most industrial scales are so used.

Their principal limitation is in speed of response. The mass and inertia of the lever system does not permit weighing speeds as great as strain-gauge load cells, which can be used to weigh vehicles moving at high speeds. The normal output of a mechanical lever scale is a visual signal, not readily coupled into other systems, but may be handled quite easily.

HYDRAULIC LOAD CELLS

All hydraulic load cells function on the principle of a force counterbalance. Weight imposed upon the load cell causes a change in internal fluid pressure. A wide variety of pressure detecting devices is employed to translate pressure into an analog signal proportional to weight. The most popular readout device is a precision bourdon tube.

For practical application, hydraulic load cells must function without leakage, they must be relatively free of internal friction, and, most desirably, they must be linear and precise in operation.

One approach to the above criteria has been through the use of a close fitting piston and cylinder, using an ordinary O-ring as a means of preventing leakage past the piston. While such devices will function rather satisfactorily under some conditions, one must guard against frictional losses due to the rubbing of the O-ring.

The Rolling Diaphragm Design

With the introduction of the so-called rolling diaphragm, a new and very successful design of hydraulic load cell appeared. This is illustrated in Figure 7.25m. Here we note that the hydraulic fluid is confined within the diaphragm chamber by means of the clamped seal between the cylinder wall and base plate. The piston or load-bearing member is guided within the cylinder by two sets of ball guide rings. Thus, the piston is substantially limited to one degree of freedom (i.e., parallel to its major axis). The effective acting area of the piston equals the area of a circle whose diameter is the mean diameter of the diaphragm convolution. It has been found that this area is very constant over a wide range of piston displacements. Thus, the requirement of linearity and precise performance is satisfied. One limiting factor on this design is the ability of the elastomer diaphragm to withstand pressure. Materials available limit the maximum internal pressure to 800 to 1000 PSIG (5.5 to 6.9 MPa). One can increase the size (area) of the load cell to overcome this pressure constraint, but the diaphragm molding techniques tend to limit size.

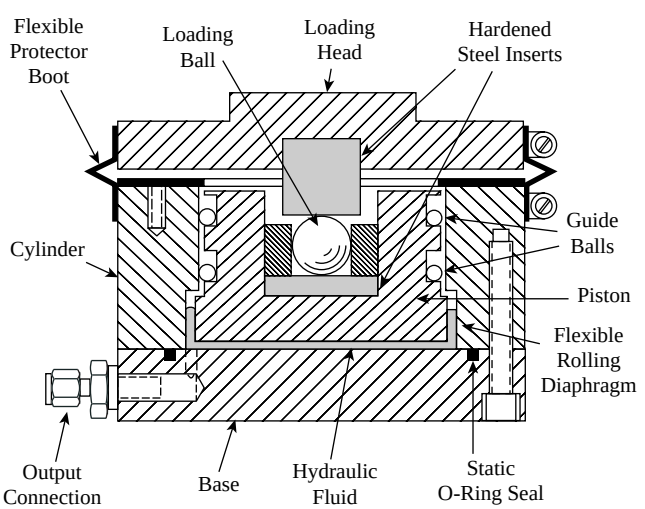

FIG. 7.25m
Cross section of the rolling diaphragm hydraulic load cell.

Performance Performance of the rolling diaphragm type of hydraulic load cell is acceptable for most process weighing applications. One may except measurement inaccuracies of ±0.25% of full scale or better on properly installed systems.

An outstanding feature of the rolling diaphragm type hydraulic load cell is its relative insensitivity to the amount of hydraulic filling. Thus, in making connections to gauges or other readout equipment, high-pressure hoses rather than rigid tubing may be permitted where desirable.

It is also easy to visualize that because of the relative insensitivity to filling, changes in hydraulic fluid volume due to ambient temperature variations have little effect on load cell performance. The system tends to be quite stable under varying temperature conditions provided that other factors, such as diaphragm stiffness variations, do not affect its performance.

All Metal Design

A more complex design, eliminating the flexible (elastomeric) diaphragm, is shown in Figure 7.25n. This design

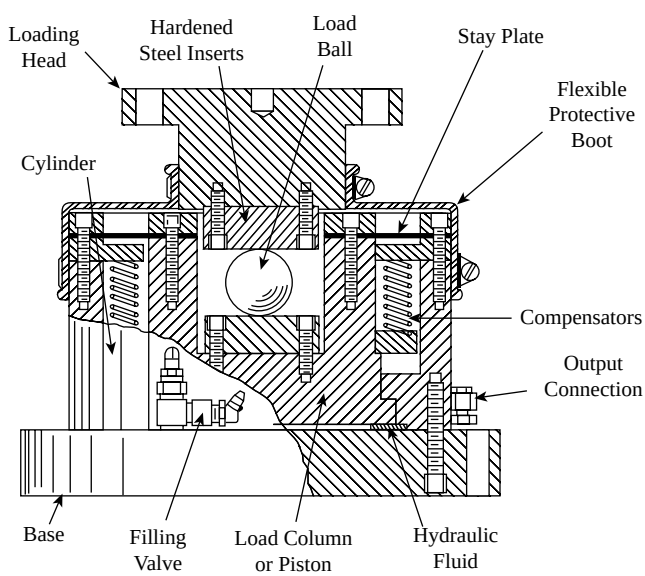

FIG. 7.25n
Cross section of the all metal hydraulic load cell.

© 2003 by Béla Lipták

is characterized by all metal construction, using a very limited quantity of hydraulic fluid. One outstanding feature of this design is its ability to accept extremely heavy unit loads. Successful hydraulic load cells with individual capacities of 10,000,000 lbm (4,500,000 kg) have been constructed.

By eliminating all bearings, pivots, and knife-edges, hydraulic load cells offer high sustained accuracy. Displacement under capacity load, although dependent on connected auxiliary instrumentation, can usually be limited to 0.005 to 0.010 in. (0.125 to 0.25 mm). The natural frequency of hydraulic load cells is high, and on dynamic load applications, resonance is rarely, if ever, encountered. The viscous damping characteristics of the hydraulic medium tend to yield stable weight signals even under dynamic disturbances.

Hydraulic load cells are self-contained and require no outside power for operation. They are inherently explosion proof and are available for both tension and compression force measurement. The hydraulic load cells illustrated in Figures 7.25m and 7.25n are applicable to tank, bin, and hopper weighing. In both types, the supported load is borne by a top member, or head plate, which in turn rests upon a ball or rolling member.

The rolling member is supported by the load sensitive piston or column. Any tendency of the load head to move in a horizontal plane, as under the influence of an expanding or contracting vessel, is accommodated by a corresponding rolling action of the ball. The load cell is protected from heavy side forces that would tend to interfere with its free vertical displacement under varying load conditions.

Hydraulic Totalizers

In using hydraulic load cells for process weighing applications, a special problem arises when the vessel is supported on more than one load cell. In order to obtain the total weight of the supported body, the output of the support points must be added. If the load cells are simply interconnected, and an average pressure is obtained, the danger of grounding of one point may occur, especially under conditions of nonuniform support loading.

This problem is solved through the use of a hydraulic totalizer, as shown in Figure 7.25o. Here, the output of each load cell is conducted to individual modules, which are, in effect, small pistons and cylinders. The output forces of the piston/cylinder combinations are collected on an output module, usually of larger acting area than the input modules. Provided this can be accomplished without serious internal losses, one pressure signal proportional to the several inputs may be developed.

Units totalizing two, three, and four inputs have been constructed with totalizing inaccuracy of ±0.1% of full scale. However, due to temperature sensitivity and other nonlinear effects, hydraulic totalizing inaccuracy in the order of ±0.25 to ±0.50% of full scale is more commonly encountered.

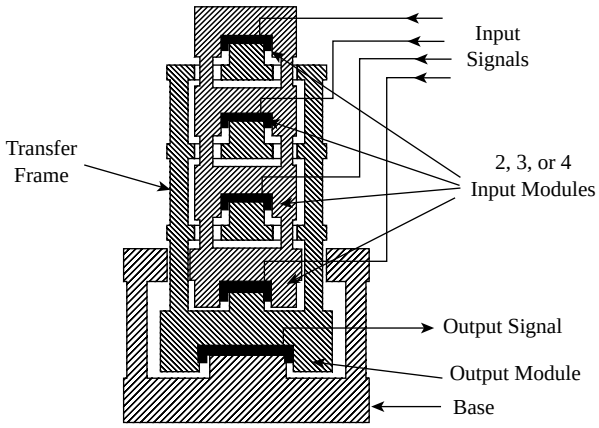

FIG. 7.25o
The hydraulic totalizer.

Electronic Totalizers Hydraulic load cells used in multiples may also be totalized by transducing the hydraulic pressure output into proportional DC voltage or current. Commercial transducers of high quality are available for this purpose. This method has the added capability of very long transmission without loss of accuracy.

Other Features

Hydraulic load cells are particularly well adapted for high impact loading applications and will withstand high overloads (300 to 400% in some instances), without loss of accuracy or zero shift.

Well-designed hydraulic load cells do include some means of temperature compensation for both span and zero effect. Nevertheless, most manufacturers specify standard operating limits of 0 to 120°F (–18 to 49°C) as a basis for the performance guarantees. Operation outside these normal limits will necessitate the reference to temperature correction charts and graphs available from all suppliers.

Hydraulic load cells have found other applications in the force measurement and weighing field. The high natural frequency, low deflection, and fast response rate make this device well adaptable to web tension control, dynamometer torque measurement, jet engine and rocket thrust measurement, and other similar highly dynamic installations.

PNEUMATIC LOAD CELLS

Pneumatic load cells have been successfully applied in process weighing. The units that are still available are all force-balance designs and function with high accuracy. Most pneumatic weighing systems are offered with tare balancing chambers, which enhance their overall performance.

The pneumatic output signal from the load cell may be read locally or transmitted by metal or plastic tubing to a remote point. The local readout of weight is usually by precision bourdon tube gauges, while for remote readouts, outputs can be transduced into electronic or digital forms.

© 2003 by Béla Lipták

Pneumatic weighing systems have several advantages. They are inherently explosion-proof; are quite insensitive to temperature variation; and in the event of rupture or leakage, they contain no contaminating fluid medium (e.g., hydraulic fluid). This feature is of particular interest to the food and drug industry.

For successful operation, pneumatic load cells and associated weighing equipment must have a carefully regulated source of clean, dry air. Although systems have been operated for short periods on inert gases such as dry nitrogen, such operation would be too expensive and impractical for process applications. Therefore, when installing a pneumatic weighing system, in addition to the system components themselves, attention must be directed to the air supply for the system. A typical requirement is 10 SCFM (283 lpm) of dry air (−40°F [−40°C] dew point) per load cell.

Figure 7.25p illustrates the cross section of a pneumatic load cell. The natural frequency of pneumatic load cells is quite low, but under certain conditions of dynamic loading, resonance may occur. This problem has been largely overcome by incorporating stabilizing or dampener chambers (Figure 7.25p).

Pneumatic weighing systems have relatively slow rates of response when the load changes incrementally. Their deflection is also low, because of their force-balance principle of operation, usually from 0.003 to 0.005 in. (0.075 to 0.125 mm).

ELECTRONIC LOAD CELLS

A variety of electronic load cells will be discussed here, including their design variations, features, accessories, and more recent advances. The more advanced, microprocessor based designs have been programmed to automatically recognize and correct errors caused by external influences, such as wind or loads moving on the scale base while weighing is in progress.

The discussion of electronic load cells starts with the strain-gauge type sensors. These detectors, their circuits, and electronics have already been discussed in Sections 5.7, 7.19, and 7.21, so the reader is also referred to those sections.

STRAIN-GAUGE-TYPE LOAD CELLS

One of the first uses of the bonded resistance wire strain gauge following its discovery in the early 1940s was in the development of an accurate and reliable load cell or force transducer. The strain gauge and its applications have been one of the most intensely researched fields in recent technological history. As a result of this work, there is a wide variety of accurate, stable, and reliable strain gauge load cells available for nearly all applications.

Strain gauge load cells represent the most practical means of weighing. One of the largest uses is in retailing, but other uses include postal and shipping scales, crane scales, laboratory scales, onboard weighing for trucks, and agricultural and petrochemical applications. Strain gauge applications include thrust measurement on rocket and jet engine test stands, launching pads, and also wind tunnels and other branches of aeronautical research.

Operating Principle

If a wire is bonded to a spring element in such a manner that its cross section varies as the spring element is strained, it is possible to establish a relationship between the electrical resistance of the wire and the force causing the deformation of the spring element. Strain gauge load cells are designed to permit controlled elastic deformation of the spring element.

In Figure 7.25q, a column is loaded in the direction of the *Z*-axis. Bonded to the four sides of the column are grids

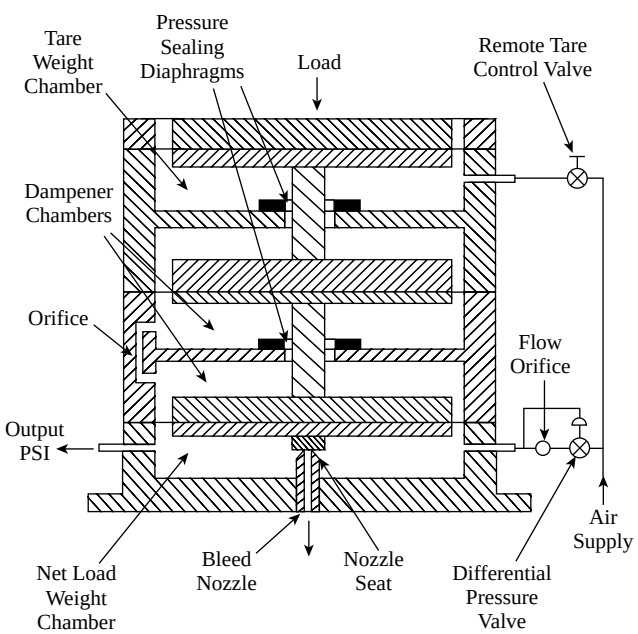

FIG. 7.25p
Pneumatic load cell cross section.

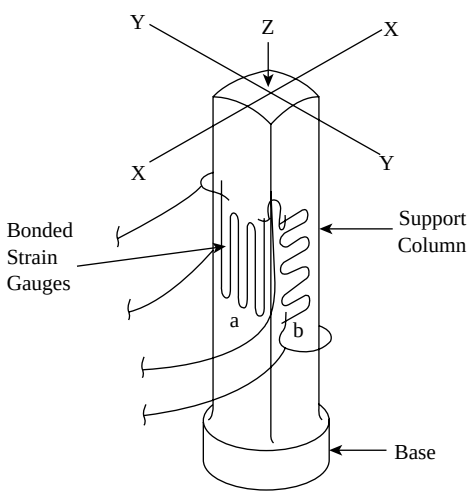

FIG. 7.25q
Column spring element used in a canister-type load cell.

© 2003 by Béla Lipták

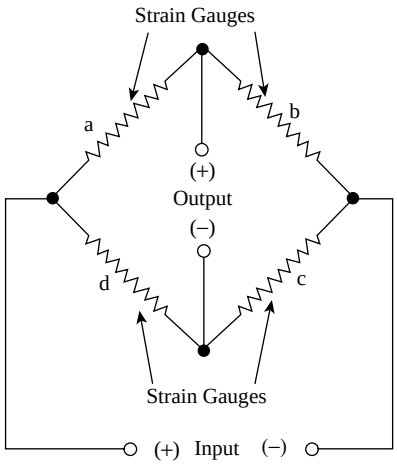

FIG. 7.25r
Wheatstone bridge for strain guage load cells.

of fine wire, a, b, c, and d. As load increases, gauges a and c tend to decrease in length, and their resistance decreases. Gauges b and d, mounted perpendicular to Z, are placed in tension by the column tending to decrease in cross section (Poisson effect), and their resistance will increase.

The four gauges are connected into a Wheatstone bridge circuit as shown in Figure 7.25r. By having gauges b and d strain opposite to a and c, the bridge unbalance due to load variations is amplified and output voltage is greater than if b an d were strained in the same manner as a and c.

In the 1950s, metallic foil bonded strain gauges were introduced and quickly supplanted wire gauges in most forms of strain gauge load cells. Using foil instead of wire improved heat dissipation, reduced creep effects, and allowed much greater design freedom in adapting gauge shapes and sizes to complex transducer geometry. For a discussion of the more recent diffused semiconductor and thin-film designs refer to Sections 5.7 and 7.21.

Design Variations

The most critical mechanical component in any load cell is the spring element. Broadly stated, the function of the spring element is to serve as the reaction for the applied load, and, in doing so, to focus the effect of the load into an isolated, preferably uniform, strain field where strain gauges can be placed for load measurement. Load cell spring elements can be divided into three types: bending, shear, and direct stress. Each will be described below.

Bending or Cantilever Elements The simplest beam configuration for a bending transducer is the basic cantilever beam (Figure 7.25s). In configuration A, pairs of longitudinally aligned strain gauges are mounted on the upper and lower surface, near the root of the beam. For certain types of applications, the characteristics of the straight cantilever beam can be improved upon by designs that induce multiple bending in the beam element. A rather simple and popular

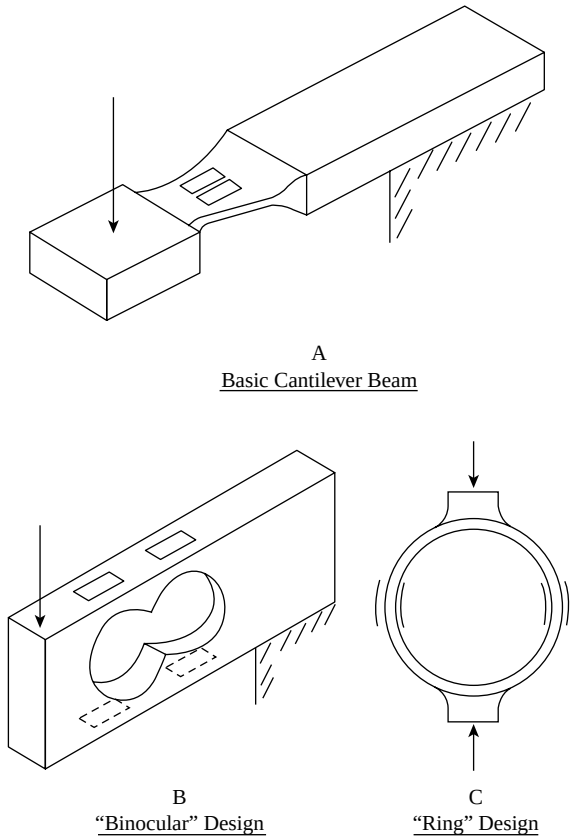

FIG. 7.25s
Load cell elements designed to detect bending.

way of accomplishing this in commercial load cells is shown in configuration B, often referred to as the binocular design.

Another type of bending spring element, which ranks with the beam designs in terms of the number and variety of its implementations, is the ring. The ring design is shown in configuration C in Figure 7.25s.

Figure 7.25t shows some of these elements incorporated into canister-type (A, B, and D) or cantilever-type (C) load cell installations. As was explained in connection with Equations 7.24(1) and 7.24(2), this type of load cell is insensitive to changes in the location of the point of loading. Therefore, it can tolerate some amounts of tank movement due to thermal expansion or other causes. The cantilever beam design is also insensitive to torsional loads. This insensitivity can permit the use of simplified installations and less staying or restraining of the weigh tanks.

Beam-Type Load Cells The beam-type design consists of a slotted bending beam construction (Figure 7.25u). Strain gauges at the locations shown are arranged in a Wheatstone bridge configuration, so that the output of the sensing element is independent of the position of the applied load. Electrical compensation of the bridge circuitry can reduce the load position sensitivity to virtually zero. As will be observed, this is a very important feature.

© 2003 by Béla Lipták

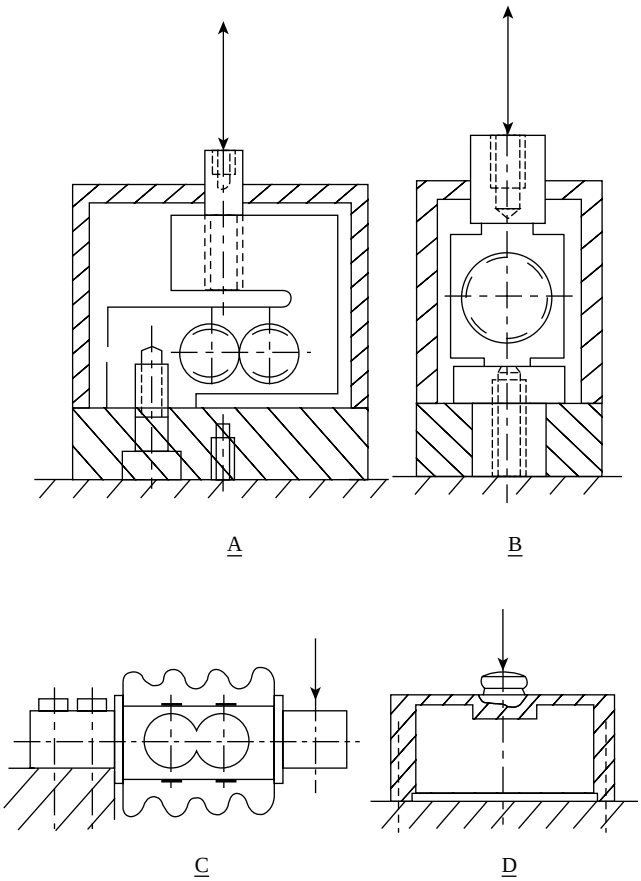

FIG. 7.25t
Canister (A, B, D) and cantilever (C) load cells with strain gauge elements that detect bending.

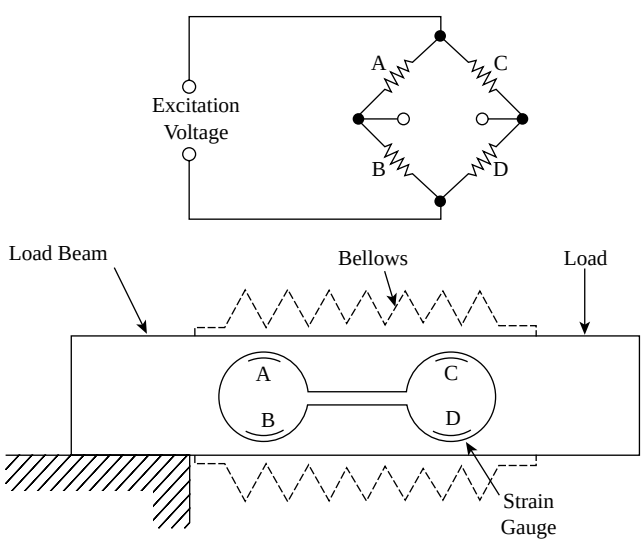

FIG. 7.25u
Beam-type strain gauge transducer.

Protection from environment effects is by a simple bellows arrangement, making the conventional diaphragm and cylindrical casing unnecessary. Strain gauge location and beam design make the installation insensitive to variations in the location of the loading point or to end loading and torsional loads. This simplified load sensing configuration provides inherent linearity as well as very low creep and very high repeatability. Typical performance features are summarized in Table 7.25v.

TABLE 7.25v
Performance of Beam-Type Strain Gauge Transducer

Rated capacity range	10 to 5000 lbs (4.5 to 2270 kg)
Output	2 mv/v
Terminal linearity	±0.03%
Hysteresis	0.015%
Creep (30 min)	0.02%
Temperature effect on zero	0.15%/100°F (38°C)
Temperature effect on output	0.08%/100°F (38°C)

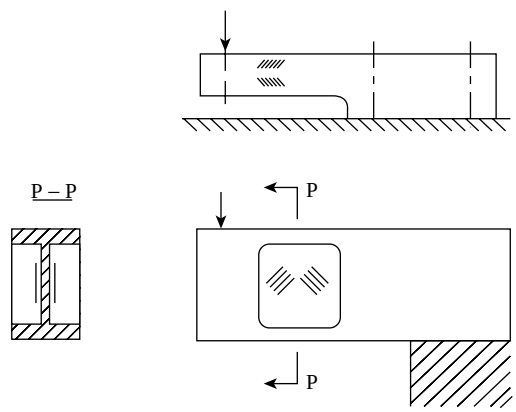

FIG. 7.25w
Shear-type load cell element installed in a cantilever configuration.

Shear Elements The operating principle of the shear-web spring element is illustrated in Figure 7.25w. At section P–P of the beam, a recess has been machined in each side, leaving a relatively thin web in the center. Pairs of strain gauges, with their grid lines oriented along the principal axes, are installed on both sides of the web. Shear-web spring elements are not limited, of course, to cantilever beam configurations; a variety of other designs can also be found in commercial load cells.

Direct Stress or Column-Type Elements The history of the column load cell dates back to the earliest strain gauge transducers. The column spring element consists of one or more cylindrical members of the general form shown in Figure 7.25q. The spring element is intended for axial loading. It typically has a minimum of four strain gauges, two in the longitudinal direction and two oriented transversely to sense the Poisson strain. Column spring elements take on a wide variety of forms in designers' attempts to optimize the load cell in terms of both production and performance considerations. The column cross

© 2003 by Béla Lipták

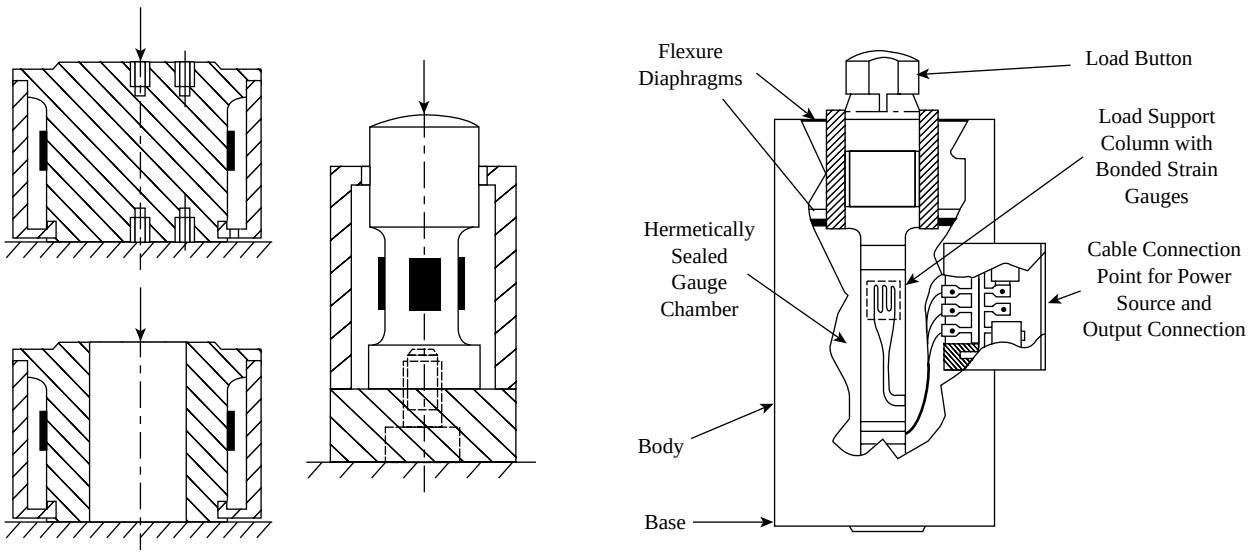

FIG. 7.25x
Canister-type load cells with coloumn-type direct-stress elements.[1]

section may be square, for example, instead of circular, or it may be circular with flats machined on four sides to facilitate strain gauge installation (Figure 7.25x).

Transducer Design

Selection of the transducer spring material deserves careful attention. Linear-elastic load response, with minimal hysteresis, is one of the most desirable mechanical properties for a spring material. Among thermal properties, thermal conductivity is important. From a manufacturing perspective, it is important that the transducer material be easily machined and must harden without distortion.

The modulus of elasticity of the material is important in determining the dimensions of the spring element with respect to load rating. While steel alloys make excellent materials for high-capacity spring elements, they are often unsatisfactory for low-capacity units. In the latter case, to achieve suitable strain levels in reasonably thick and easy-to-machine sections, it is generally necessary to use low-modulus materials such as aluminum alloys.

Practical transducer design considerations dictate that the strain gauge be mounted in the area of highest strain. For most load-cell designs, a good general rule of thumb is that the strain under the gauge grid should not vary by more than 10 to 15% from the absolute maximum. Usually gauge lengths are in the range from 0.060 to 0.125 in. (1.5 to 3.2 mm).

Strain Gauge Backings and Bonding Three broad types of strain gauge backings are commonly used in transducers. These are: polymides, epoxies, and reinforced epoxies. For the strain-sensing grids, four alloy types are commonly used: constantan, Karma, Isoelastic, and platinum-tungsten. Since not all backing alloy combinations are mutually compatible, the strain gauge catalog must be consulted for actual selection.

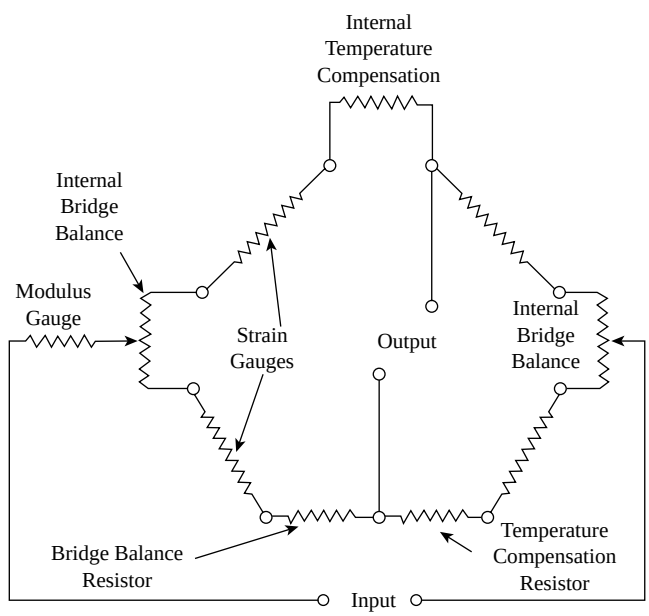

FIG. 7.25y
Strain gauge circuit schematic.

No single manufacturing step in transducer production has more influence on the performance and longevity of a transducer than does strain gauge bonding. Paramount to this process is the selection of the appropriate adhesive. The epoxies form the largest class of adhesives used for strain gauge bonding. Cyanoacrylate adhesive is used in simple load cells where high accuracy is not required.

Strain Gauge Circuits

As illustrated in Figure 7.25y, modern strain gauge transducers commonly employ four strain gauge grids electrically connected to form a Wheatstone bridge measuring circuit. All strain

© 2003 by Béla Lipták

gauge load cells are compensated for the effects of temperature on zero shift and span. This is accomplished by making the strain wires out of temperature insensitive alloys and introducing suitable compensating resistors into the bridge network.

A typical strain gauge circuit is shown diagrammatically in Figure 7.25y. The output signal of a strain gauge is relatively small and is a function of the excitation. A common value is 2 to 3 mV per volt of excitation. The excitation voltage (AC or DC) is usually in the range of 5 to 20 V, with values in the order of 12 V recommended for average installations.

Performance of Strain Gauge Load Cells

As a result of increasing experience and a widening background of empirical knowledge, it is practical to consider the use of strain gauge load cells on installations requiring inaccuracies from ±0.03 to ±0.25% of full scale.

Temperature compensation systems for span and zero shift are now an intrinsic part of all high quality strain gauge load cells. Nevertheless, for operation outside normal temperature limits, generally –4 to 160°F (–20 to 70°C), the use of correction factors is needed. One might also provide means of controlling temperatures around the load cells by auxiliary means.

Strain gauge load cells should be protected from angular or nonaxial loads. Any force other than normal or axial will tend to cause bending of the support column or columns. Inasmuch as a strain gauge cannot discriminate between bending and axial loads, errors in output can result. Where strain gauge load cells are installed under tanks, bins, or hoppers that are subject to excessive bending, expansion, or contraction, special mounting equipment is available to help isolate the load cell from undesirable external side forces (Figures 7.25f, 7.25g, 7.25h, and 7.25i). In extreme cases, specially designed mounting pedestals may be required.

Strain gauge load cells are designed for operation within specific capacity ratings. Excessive overloads may result in loss of accuracy or failure. In general, the load cells should not be subjected to more than 125% of their rated capacity. This includes impact or shock loading, as well as static loading.

OTHER LOAD CELL DESIGNS

For the sake of completeness, a large variety of load cell designs are described in the following paragraphs. The capacitance-type load cells are not covered here, because their principle of operation has already been described in connection with Figure 5.7i. Similarly, the piezoelectric dynamometer load cells are not discussed here either, as they have already been discussed in Figure 7.21b. Some of the load cell designs that are discussed in the following paragraphs are only addressed to make the coverage of the topic complete (inductive, reluctance, magnetostricitve), but they are not widely used.

Semiconductor Strain Gauge

The scientists at Bell Laboratories discovered the piezoresistive characteristics of germanium and silicon semiconductor materials in the mid-1950s. It was discovered that the terminal resistance of these devices is highly sensitive to applied stress or strain. In fact, their gauge factors (unit change in resistance divided by unit strain) are more than fifty times those of their metallic wire or foil strain gauge counterparts.

While possessing very high strain sensitivity relative to that of metallic strain gauges, they also exhibit substantial nonlinearity, and temperature effects on strain sensitivity and terminal resistance are also relatively high. The latter characteristics have somewhat limited their application. Nevertheless, semiconductor strain gauges are used in force measuring devices in which high output signal level and low system cost are the primary objectives.

Semiconductor strain gauges in load cell configurations provide units with rated output capabilities of 1.0 V at 15 V bridge excitation. As a result of the high signal level, semiconductor units are used in simple weighing systems with simple regulated power supplies and direct meter readouts. Sometimes an amplifier is interposed between the transducer and the meter display.

Typical performance characteristics of semiconductor load cells are listed in Table 7.25z along with the load cells' metallic strain gauge counterparts.

The moderately high cost of semiconductor load cells and the dramatic cost reductions in linear integrated circuitry have limited the use of the semiconductor load cell in low cost weighing systems. In other words, the cost of linear amplification required to raise metallic strain gauge load cell signals to the levels offered by their semiconductor counterparts is now less than the additional cost for semiconductor load cells.

Nuclear Radiation Sensors

This form of weight sensing is generally applied to in-motion weighing of bulk materials. It utilizes a radioactive source of gamma rays that are directed through a certain section of the moving material. The material absorbs some of the gamma

TABLE 7.25z
Performance Characteristics of Semiconductor and Strain-Gauge-Type Load Cell

Performance Characteristic	*Semiconductors Load Cell*	*Metallic Strain Gauge Load Cell*
Output (at 15 v)	1.0 V	30 mV
Terminal linearity	0.25%	0.05%
Hysteresis	0.02%	0.02%
Temperature effect on zero balance	±0.25%/100°F (38°C)	±0.15%/100°F
Temperature effect on output	±0.5%/100°F	±0.08%/100°F
Selling price index	1.3	1.0

© 2003 by Béla Lipták

rays and allows others to pass through. The amount of radiation transmitted through the bulk material depends on the amount of material on the conveyor.

A radiation sensor converts the transmitted radiation to an electronic signal, which bears a known relationship to the amount of material on the weighing section of the conveyor (Figure 7.25aa).

The nuclear radiation form of weight sensing is applicable when the weight sensor should not contact the material or the conveying devices. Certain shortcomings of conventional belt scales can be avoided with this technique.

Inductive Sensing

Inductive weight sensors use the change in inductance of a solenoid coil with changing position of an iron core. Two forms of the inductive sensing principle are illustrated in Figure 7.25bb. If iron core in configuration #1 moves to the right, the inductance of coil B increases and the inductance of coil A is reduced. Arranging the two coils in a Wheatstone bridge with resistors completing the bridge network provides a means for developing a voltage signal proportional to the core position.

Configuration #2 utilizes three solenoid coils. Coils C and D are wound in opposite directions and surround an iron core, whereas coil E is placed between the two coils and is excited by an external AC voltage source. When the iron core is centrally located, voltages induced into the secondary coils (C and D) are equal and opposite, and no voltage appears across the output terminals (F and G). If the iron core is moved to the right, the voltage coupled into coil D is greater than that coupled into coil C, and a voltage is developed at the output terminals.

If the core were moved in the opposite direction by the same amount, a similar voltage of opposite phase would be developed. Other embodiments of inductive sensors are in current use. Those discussed here are for illustrative purposes only.

Inductive sensors furnish relatively high output signal levels and efficient null stability. Since their inertial masses are greater than strain gauge sensors, they are more subject to vibration.

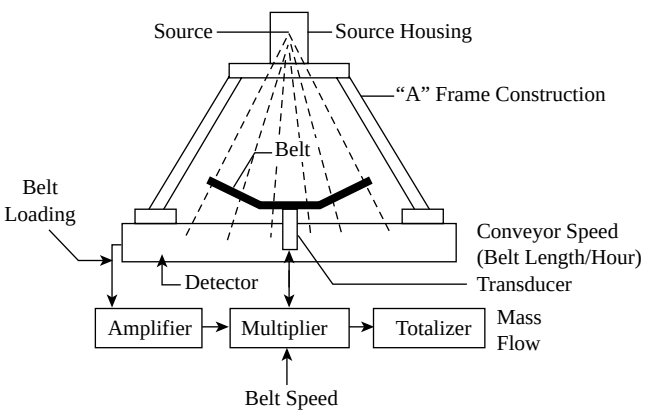

FIG. 7.25aa
Nuclear belt scale. (Courtesy of Thermo MeasureTech/Kay-Ray.)

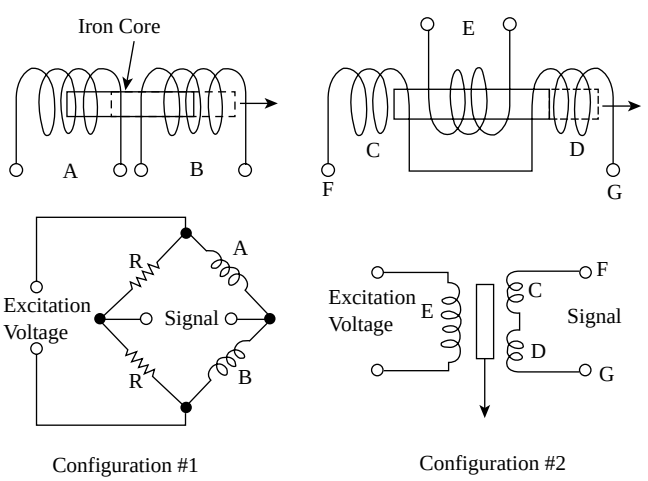

FIG. 7.25bb
Inductive sensing techniques.

Variable Reluctance Sensing

This design is similar to the inductive sensing method. The difference is that here the inductance of one or more coils is changed by altering the reluctance of a very small air gap. This technique is illustrated in Figure 7.25cc. Solenoid coils A and B are mounted on a structure of ferromagnetic material, and a U-shaped armature completes the magnetic circuit through air gaps 1, 2, and 3. Motion of the coil assembly to the right decreases air gap 2 while air gap 1 is increased. Air gap 3 remains constant during the translation of the coil assembly.

As a result of horizontal translation, the inductance of coil B increases while that of coil A drops. Incorporating the two coils in a Wheatstone bridge similar to that utilized in

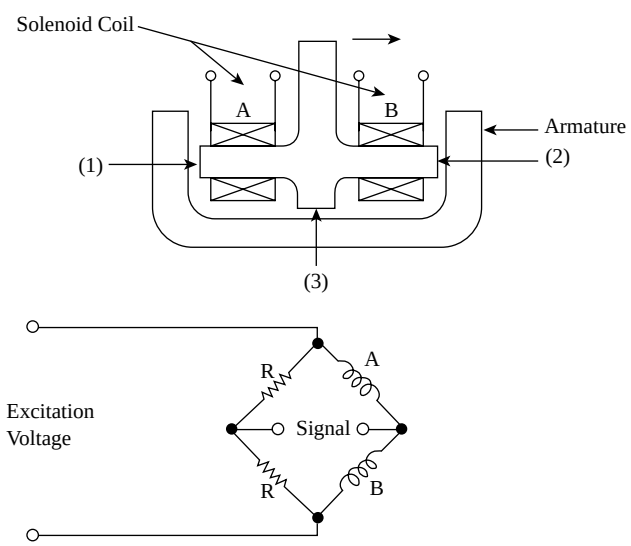

FIG. 7.25cc
Variable reluctance sensing technique.

© 2003 by Béla Lipták

the inductive sensing principle permits development of a voltage proportional to the translation of the coil assembly.

The variable reluctance sensing principle also offers a relatively high output voltage and efficient null stability with the higher vibration sensitivity due to the relatively high inertial masses of the mechanical structure.

Inductive and Reluctance Load Cells

Inductive and reluctance load cells incorporate the two basic sensing principles in the same way (i.e., the motion of a ferromagnetic core [inductive] or a coil assembly [reluctance] is converted to a voltage signal directly proportional to the displacement).

Various force sensing elements convert the applied force (weight) to a displacement to which the sensing element is coupled (Figure 7.25dd).

These transducers furnish relatively high output signal levels and moderate to high accuracy. They also cover a broad range of measuring capacities (Table 7.25ee).

Magnetostrictive Sensing

Based on the Villari effect, this technique utilizes the change in permeability of ferromagnetic materials with applied stress. A stack of laminations forms a load-bearing column (Figure 7.25ff), and primary and secondary transformer windings are wound on the column through holes oriented as shown. Coil A is excited with an AC voltage and coil B

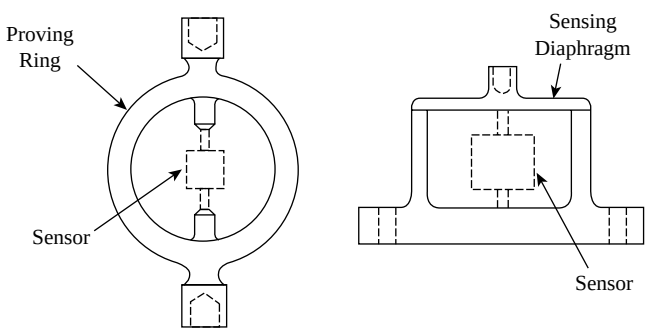

FIG. 7.25dd
Inductive and reluctance load cells.

TABLE 7.25ee
Performance Characteristics for Inductive or Reluctance Load Cells

Capacity range	0.01 to 100,000 lbs (0.0045 to 45,000 kg)
Rated output range	5 to 200 mV/V
Linearity range	0.1 to 0.5%
Repeatability	0.05%
Temperature effect on zero	1%/100°F (38°C)
Temperature effect on output	1%/100°F (38°C)

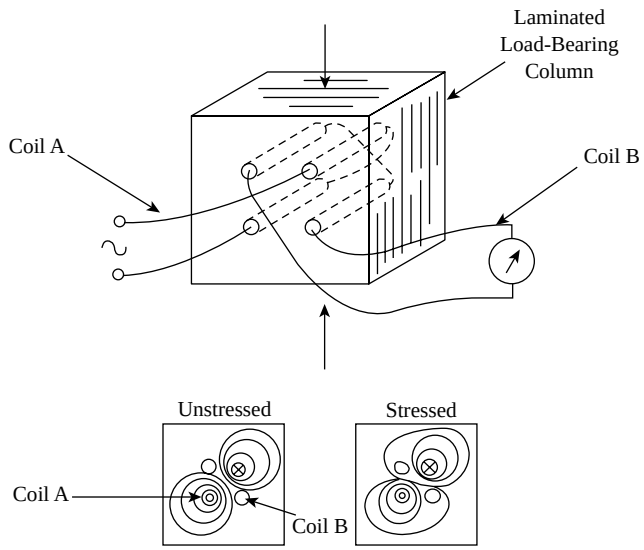

FIG. 7.25ff
Magnetostrictive sensing principle.

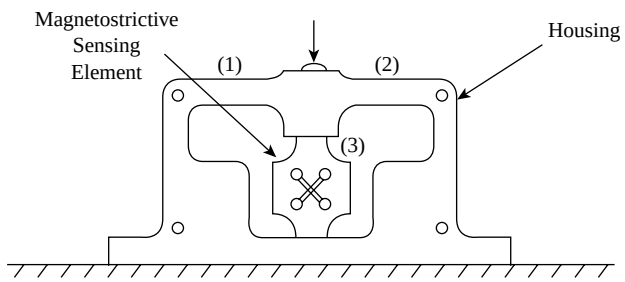

FIG. 7.25gg
Magnetostrictive load cell.

provides the signal voltage. In the unstressed condition, the permeability of the material is uniform throughout the structure. Since the coils are oriented at 90 degrees with respect to each other, little or no coupling exists between coil A and coil B. Hence, no output signal is developed.

When the column is loaded, the induced stresses cause the permeability of the column to be nonuniform, resulting in corresponding distortions in the flux pattern within the magnetic material. Magnetic coupling now exists between the two coils and a voltage is induced in the signal coil, providing an output signal proportional to the applied load.

The magnetostrictive principle produces relatively high output signal levels and offers extreme ruggedness in load cells incorporating this sensing principle.

Magnetostrictive Load Cells Magnetostrictive sensing load cells (pressductors) are finding use in industrial applications in which large output signals and ruggedness are desirable. Several typical configurations are shown in Figures 7.25gg and 7.25hh.

© 2003 by Béla Lipták

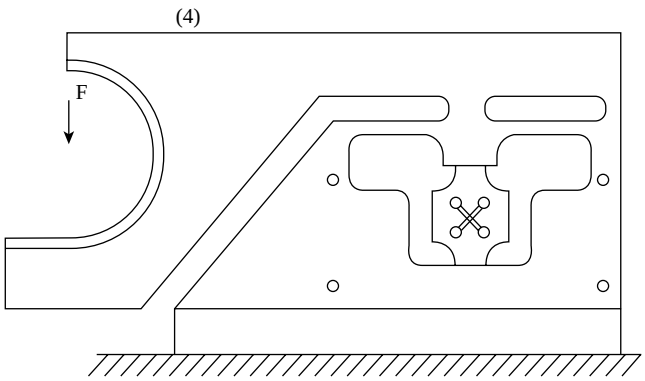

FIG. 7.25hh
Magnetostrictive load cell.

The first configuration is for applications in which there are no bearing surfaces on the devices being weighed; in the presence of lateral loads, the pressductor is very sensitive unless adequately protected. The vertical load (Figure 7.25gg) is transmitted through the flexures (1 and 2) to the sensing element (3). The same flexures also transmit lateral forces to ground in a way so that the pressductor sensing unit is subjected to only a small portion of the adverse lateral loads.

The second embodiment (Figure 7.25hh), designed for weighing during coiling operations, uses a similar construction with an additional overhanging member (4) that supports the coiler shaft, and continuous weighing during coiling operations is provided. All units are adequately protected with watertight covers to accommodate applications in industrial environments.

New pressductor designs provide weighing inaccuracies of 0.1% of rated capacity. Output signal levels range from 1 to 20 VDC, with source impedance ranging from 0.5 to 25 Ω. Overload ratings as high as fifteen times the rated load are supplied. Although usable for weighing, the pressductor has greater applicability in the steel industry for the measurement of roll-forces in rolling mills and strip-tension in strip mills.

LINEARIZATION OF LOAD CELLS

Column-type strain gauge load cells in capacities above 10,000 lb (4500 kg) heretofore have suffered from a characteristic nonlinearity of about 0.15% of rated capacity. The inherent nonlinearity of these devices results from electrical bridge nonlinearity caused by the fact that all strain gauges are not subjected to equal strain. Additional nonlinearity also results from the column area change with increasing load. The characteristic column-type load cell nonlinearity is parabolic and lends itself to almost perfect compensation by utilizing a semiconductor strain gauge compensating element.

Figure 7.25ii shows a semiconductor strain gauge incorporated in series with the excitation terminals of the load cell

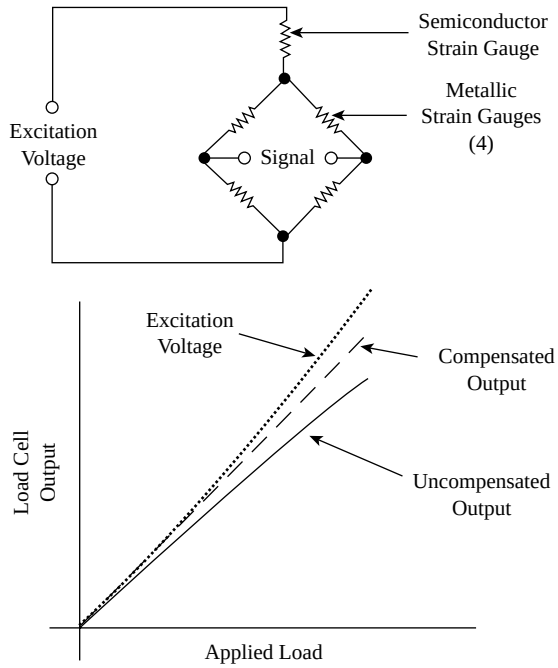

FIG. 7.25ii
Linearization of column load cells.

bridge circuitry. From the curve of output voltage vs. applied load, an uncompensated column-type load cell exhibits a drooping concave downward characteristic when loaded in compression. The linearizing strain gauge senses column strain induced by the applied compressive load and, due to its piezoresistive characteristics, its terminal resistance decreases with increasing load. The decreasing resistance with load causes the net excitation voltage applied to the bridge circuitry to increase with increasing load (dotted line), which compensates for the drooping characteristic of the uncompensated load cell and results in improved linearity (interrupted line). Adjusting the terminal resistance of the linearizing strain gauge almost exactly compensates for the inherent parabolic drooping characteristic, and terminal linearity of better than 0.02% of rated load can be provided.

Linearity of this magnitude not only eliminates external linearization within the instrumentation, but also reduces errors in multiple load cell weighing systems in which unequal distribution of total load between the individual load cells may be substantial. Unequal loading on nonlinear load cells can cause serious system errors, even in systems in which load cell nonlinearity compensation is included in the display instrumentation.

LOAD CELL HOUSINGS AND SAFETY

The standards governing the sealing of load cells are usually based on sealing against water only; they are not useful in connection with chemical protection. The typical water-sealing test is performed by submerging the load cell for

© 2003 by Béla Lipták

0.5 h in 3 ft (l m) of water. The hydrostatic head of the water is usually less than the water pressure that can occur during wash-down procedures.

Load cells for explosive atmospheres are specially designed and tested. For Europe, the regulations are dictated by the European Committee for Electro-technical Standardization (CENELEC). (For electrical safety practices in the United States, see Section 7.2.) The best protection can be achieved by using a flameproof enclosure. This protection is called d and is marked as EEx-d. With this type of protection, the load cells can be directly connected to the instrument in the safe area.

Another solution is to place Zener barriers between the instrument and the load cells. This is called intrinsic safety i and is marked as EEx-i. However, it should be noted that the load cells and the indicator are temperature-compensated devices and the Zener barriers have a serious temperature effect. The instrument must be compensated for temperature errors.

The classification system used to identify situations where the presence of electrical equipment could create an explosion hazard is differently determined in various countries. In the United States, Factory Mutual is the recognized leader in certifying equipment for hazardous environments. A hazard can be caused by the equipment's generating enough heat to reach the ignition temperature of ambient gases (or dusts) or by generating an arc due to shorting or to opening an electrical connection.

Intrinsic Safety

Ultra-low power displays are marketed by some weighing system manufacturers like Fairbanks Scales. This instrument is intrinsically safe for every class, division, and group of the classification discussed above. It has fiber-optic digital outputs, 1 to 4 set points, and 4 to 20 mA analog output for weighing and for process control applications. It needs no explosion-proof enclosures, and its 1.25 in. (30 mm) large liquid crystal displays are easy to read. Both the platform and the indicator can be placed in the same hazardous area. The battery, which powers the unit, lasts up to 6 months before recharging is required.

SPECIAL APPLICATION

High Temperature Load Cells

As load cell weighing was applied to the metal processing industry, the need for devices to withstand high environmental temperatures became pressing. In recent years, organic and inorganic bonded strain gauge backing and installation materials have become available and can withstand higher temperatures than conventional units. Bonded strain gauges with organic backings are now available for continuous operation at temperatures as high as 500°F (260°C).

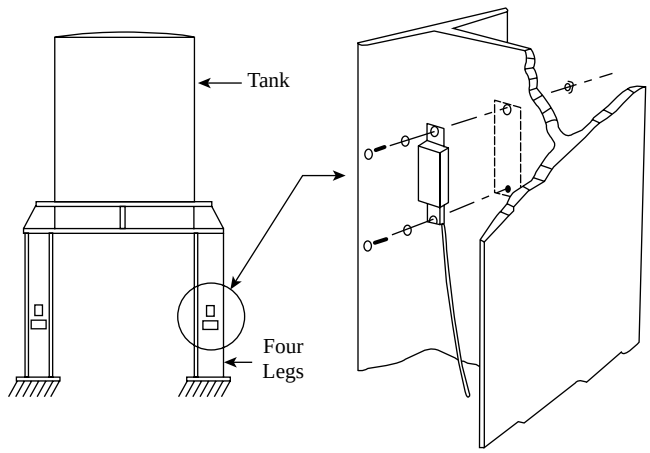

FIG. 7.25jj
Direct gauging of tank supports. (Courtesy of Kistler-Morse Corp.)

On special applications, high temperature strain sensing wire alloys have been installed with inorganic bonding materials, such as ceramic cements and flame spray techniques, where molten aluminum oxide is sprayed on the sensing element and on the strain sensing grid to hold the latter firmly in place. These installations allow short-term operation at temperatures of 1000°F (538°C), but with some degradation in performance.

Weighing of Tank Legs

In some installations, load cells cannot be used at all. This can be because the structures are already fabricated and erected, and their support by load cells would require extensive field modification.

One solution to the weighing of these structures is installing strain gauges directly on the supporting legs. In such installations, the legs become the sensing elements to which the strain gauges are applied in full bridge configurations.

In a typical installation (Figure 7.25jj), a pair of gauges is applied longitudinally, sensing the compressive stresses in the tank legs. Another pair is applied in the transverse direction, sensing the tensile strains due to the Poisson effect. The four gauges are connected in a Wheatstone bridge arrangement and leads are brought out from each leg to a summing box and from there to the readout instrumentation. The installation is thoroughly protected with waterproofing materials.

Usually, the strains established in the supporting legs are very low and it is difficult to achieve perfect waterproofing permanently. As a result, the accuracy of such a weighing system tends to be relatively poor—3 to 5% of rated capacity.

DEVELOPING NEW SENSORS

In the area of new sensor developments, fiber optic load cells are gaining attention because of their immunity to electromagnetic and radio frequency interference (EMI/RFI), suitability

© 2003 by Béla Lipták

for use at elevated temperatures, and intrinsically safe nature. Work continues on the development of optical load sensors.

Two techniques are showing particular promise: measuring the micro-bending loss effect of single-mode optical fiber and measuring forces using the Fiber Bragg Grating effect. Optical sensors based on both technologies are undergoing field trials in Hokkaido, Japan, where they are being used to measure snow loads on electrical transmission lines.

A few fiber optic load sensors are commercially available. One fiber optic strain gage can be installed by drilling a 0.5 mm diameter hole into a stud or bolt, and then inserting the strain gage into it. Such a sensor is completely insensitive to off-axis and torsion loads.

The development of micro-machined silicon load cells is also underway. At the Universiteit Twente in The Netherlands, work is progressing on a packaged monolithic load cell using micro-machining techniques, and it is possible that silicon load cells will dominate the weighing industry in the future.

New Load Cells

Load cell technology is advanced by improved accuracy, reduced sensitivity to interferences, increasing life through better sealing, better calibration, reduced costs through high volume production and calibration, and the use of built-in microprocessors. An illustration of a newer load cell is given in Figure 7.25kk. This bending ring load cell is only 3 in. in diameter and 1 in. tall (75 × 26 mm) for a load of 1.3 tons and 3.75 × 1.4 in. (95 × 35 mm) for a 13-ton load application.

Load cells of this type with foil strain gauges are produced for retail shop scales having a resolution up to 6000 graduations over their ranges. The foil gauges can be used down to 5 lbm (2 kg) and with bridge resistance values over 2 kΩ. With smaller loads, a force shunt occurs which increases the errors due to creep.

Thin-Film Strain Gauges Load cells using thin-film strain gauges are available with nominal loads from 1 to 10 lbm (0.5 to 5 kg) and with a bridge resistance of 4 kΩ.[3] These provide the measuring stability of load cells without hermetic metallic encapsulation of the strain gauge. Stability is tested for a period of 50 days with daily temperature cycles ranging from 77 to 131°F (25 to 55°C) under saturated conditions, which cause occasional condensation. The sensitivity of such a load cell having 5000 graduations may vary by up to 0.02%, and its zero signal may vary by up to 10% (Figure 7.25ll).

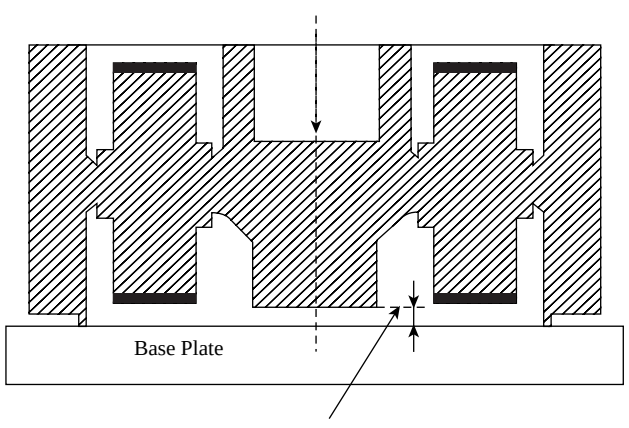

FIG. 7.25kk
Cross-sectional view of a bending-ring-type load cell.[2]

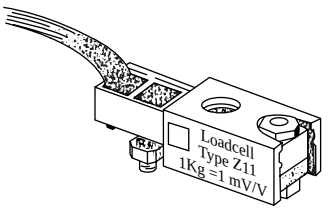

FIG. 7.25ll
Thin-film strain gauge for small loads of 1 to 10 lbm (0.5 to 5 kg) and providing 5000 graduations.[3]

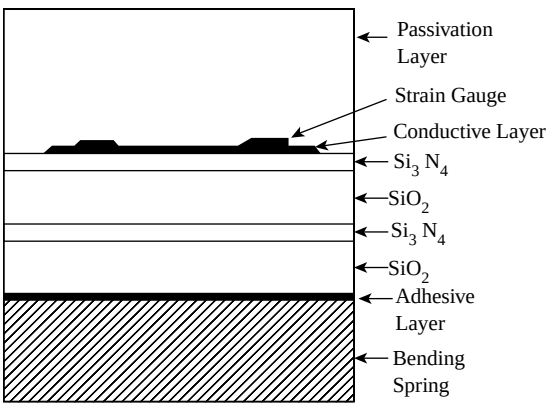

FIG. 7.25mm
The layer-by-layer construction of a thin-film strain gauge element.

In the new thin-film load cell, CrSi thin-film technology is used. Stability and moisture resistance are provided by a patented insulation layer between the spring body and the strain gauge elements that consists of a fourfold sandwich of SiO_2 and Si_3N_4. SiO_2 supplies the necessary insulation against electronic current flows. Si_3N_4 prevents ion migration into the strain gauges that could otherwise happen due to the electric field generated by the bridge excitation (Figure 7.25mm).

Another problem in thin-film technology is the material of the spring element in the load cell. This is because the thin film has no creep at all, and the strain gauge cannot compensate for the creep of the spring material. For this reason, the spring material is the rather expensive FeNi alloy. Due to the cost of FeNi, the spring is rather small (3 mm thick).

Thin-film load cells have low power consumption, small size, and meet the following calibration requirements:

Weight Range	*Graduations (Divisions)*
4 to 10 lbm (2 to 5 kg)	3000
2 to 4 lbm (1 to 2 kg)	2000
1 to 2 lbm (0.5 to 1 kg)	1500

© 2003 by Béla Lipták

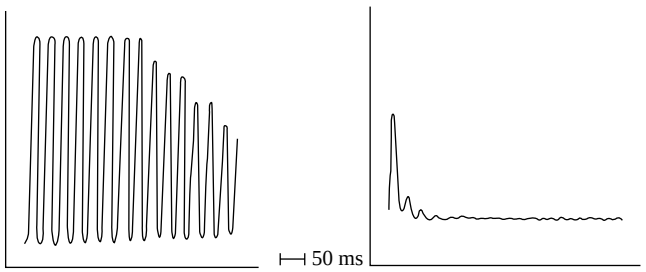

FIG. 7.25nn
Load-cell output signals: without damping (left) and with hydraulic damping provided in the load cell (right).

Hydraulically Damped Load Cells Another new load-cell combines a mechanical damping system with adjustable mechanical tare compensation. The single-point load cells are provided with a damping plate immersed in high-viscosity silicone oil and provide a stabilized signal within 150 ms (Figure 7.25nn). On applications involving bins or conveyors, preloads of up to 20 lbm (10 kg) can be tared out with the help of a built-in adjustable spring. Thus smaller-range load cells with higher output signals can be used for the same application.

The hydraulically damped load cells are available with 6 to 10 lbm (3 to 5 kg) ranges with a combined error of less than 0.02% full scale. They are particularly advantageous in multi-head, computerized packaging scales. Overload protection is effective up to 1000%.

Microprocessors and Networks

There are many load cell designs that are provided with built-in microprocessors. Some are able to withstand the adverse weather conditions in outdoor sites. Others contain a microprocessor that has been programmed to automatically recognize and correct errors caused by external influences or by the movement of the loads on the scale base while weighing is in progress. The capacity of some of these intelligent weight bridges can be 500 tons.[4]

Interfacing with Programmable Logic Controllers Advanced weighing modules[15] can exchange weighing information on a digital bus or network, using 32 read and write registers, or work as a stand alone device (Modbus Plus, Modbus TCP/IP, Interbus, I/O bus supported).

They can interface with up to 8 load cells to give one weighing measure. Such modules usually have 4 inputs (tare, reset tare, zero, print) and two high speed outputs (1 ms resolution). Such advanced weighing modules bring the data to the programmable logic controllers. Therefore, it becomes global in the sense that the user has access to the weighing system from all the different devices on the plant's network.

The Role of the Personal Computers The output signals of the load cells must be compatible with computerized data processing systems and/or with personal computers (PCs). The software tasks include in-motion and multi-head scale weighing and the intergration of these systems into plant-wide bus systems.

An example of newer digital load cell electronics is the signal by Hottinger Baldwin Messtechnik.[5] In this unit the electronic circuit is on a small board and it forms a link between the strain gauges and the serial RS-232 interface of a PC. It supplies the bridge with DC power and digitizes the output over the full measurement range. Gate-array technology is applied in the analog-to-digital (A/D) converter, utilizing a method of conversion that offers a resolution of 16 bits, coupled with a speed of 150 measurements per second.

Following the A/D conversion, the signal conditioning is implemented by a mask-programmed microprocessor that carries out the zero-point balancing and auto-calibration, scales the transducer signal, filters, forms mean values, and tares the system. The digital filter can provide suppression of noise or unwanted parts of the signal. Various filter cutoff frequencies are selectable. When averaging consecutive measurements, the measurement rate can be changed in steps.

There is also a trend to use PCs as weighing system components, because of their low cost and flexibility. One consideration in the use of PC is the operator accessibility of software functions and data security against manipulations.[6]

Verified Weighing with PCs Figure 7.25oo illustrates a method of verified weighing through the use of personal computers. In this system, the hardware and software for the handling of the verified data are collected in an external PC card that communicates through an optional slot with the PC. This is called the security unit (SU)—a data channel that transfers measurement and print data among the PC, printer, and verified receiver.[7]

The video displays the verified data (with the highest priority) as a window into the existing picture on the PC monitor. As is shown on the block diagram, the output of the enhanced graphics adapter video card is directly connected to the video input of the SU. Therefore, a window for the display of weight data is generated into the normal display without an access possibility of the PC.

Networks and Buses As one integrates weighing systems into plant-wide process control systems, it becomes an important requirement to easily connect single sensors and actuators into networks. Bus systems for high-capacity data transmission have been primarily developed for computer communication, and the demand for networking of passive field instruments started only recently.[13] For a listing of the various fieldbus protocols and their attributes, refer to Table 7.24d in the previous section.

In Europe, the process field bus Profibus has been around for a while, and Sensorbus has also gained some ground. ISIbus has been offered to the international standardization bodies based on a rugged and environmentally resistant connection method—the inductive coupling. Its ability to combine high data rates and power transfer to field devices operating

© 2003 by Béla Lipták

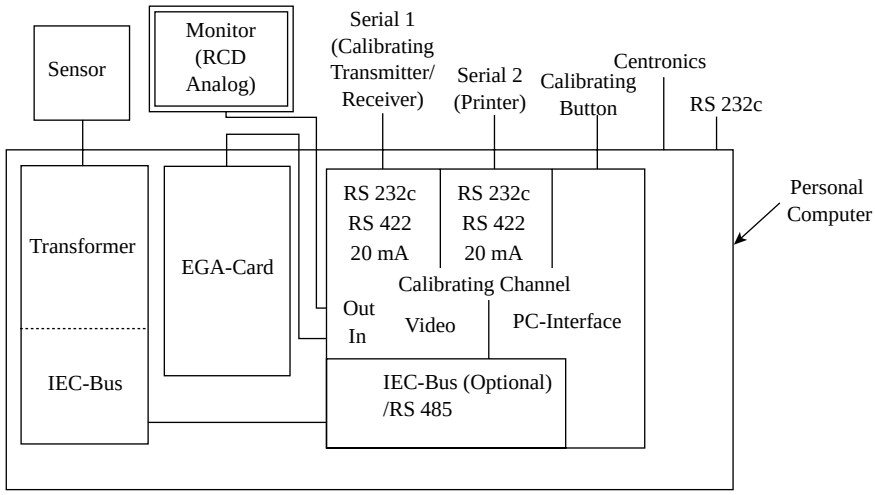

FIG. 7.25oo
Verified weighing with personal computer.[7]

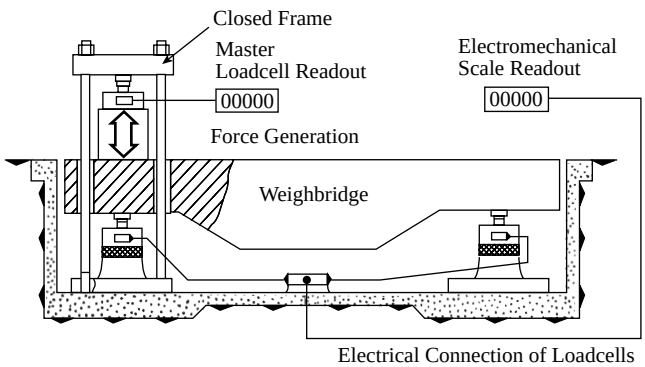

FIG. 7.25pp
Weigh-bridge calibration using master load cells for reference.[8]

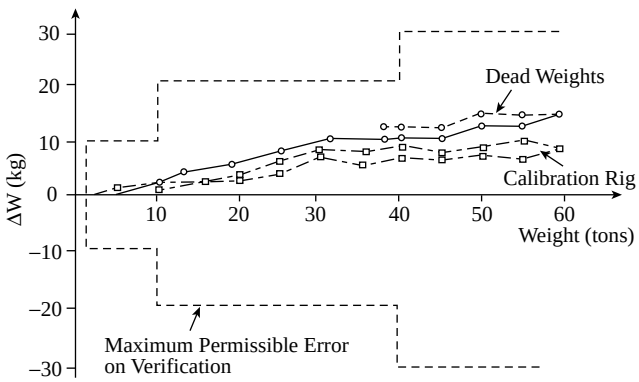

FIG. 7.25qq
The relative performance of a weigh-bridge when calibrated against deadweights and when calibrated against master load cells.

in hazardous areas makes ISIbus a useful contribution to the field bus concept.[14]

CALIBRATION AND TESTING

Calibration and testing of large weigh-bridges is usually done by deadweights, and it is an expensive, time-consuming, and sometimes even dangerous process. To calibrate a 60 or 100-ton road weigh-bridge or 200-ton railway weigh-bridge, considerable amounts of standard weights must be transported to the location and placed on the bridge.

The idea of the application of master load cells instead of standard weights is not new, but until recently, their stability and accuracy were not satisfactory. The accuracy of the master cell must be at least 3 times better than that of the weighing cell. The master load cell approach[8] offers 10 times higher resolution even when calibrating a 6-load-cell weigh-bridge with 3000 divisions.

In terms of the number of steps, this corresponds to $10 \times 3000 \times 6 = 180{,}000$ steps. In the system illustrated in Figure 7.25oo, the force is generated by a DC servomotor instead of by hydraulic systems, which have been found to be unstable.

The procedure for calibration can involve incremental loading, where at each step in load the two output signals (weigh-bridge and master load cell) are compared, or it can be continuous. If continuous calibration is used, both sensors are triggered at certain load levels and the instantaneous readings are compared. Figure 7.25qq shows the results of the calibration of a 60-ton 6-load-cell weigh-bridge using deadweights and also using the test rig.

Aircraft Weighing The weighing of aircraft is a specialized application and serves the function of loading controls, deicing, etc.[9] The weighing is done either by jacking and leveling the aircraft at three points or by using mobile weighing platforms. Still air environment is essential (even the blower heaters must be turned off) and an enclosed hangar is necessary.

The center of gravity of the airplane is obtained from weighing and is used to evenly distribute the passenger/cargo/fuel loads in the aircraft to ensure that the balance is within specified

© 2003 by Béla Lipták

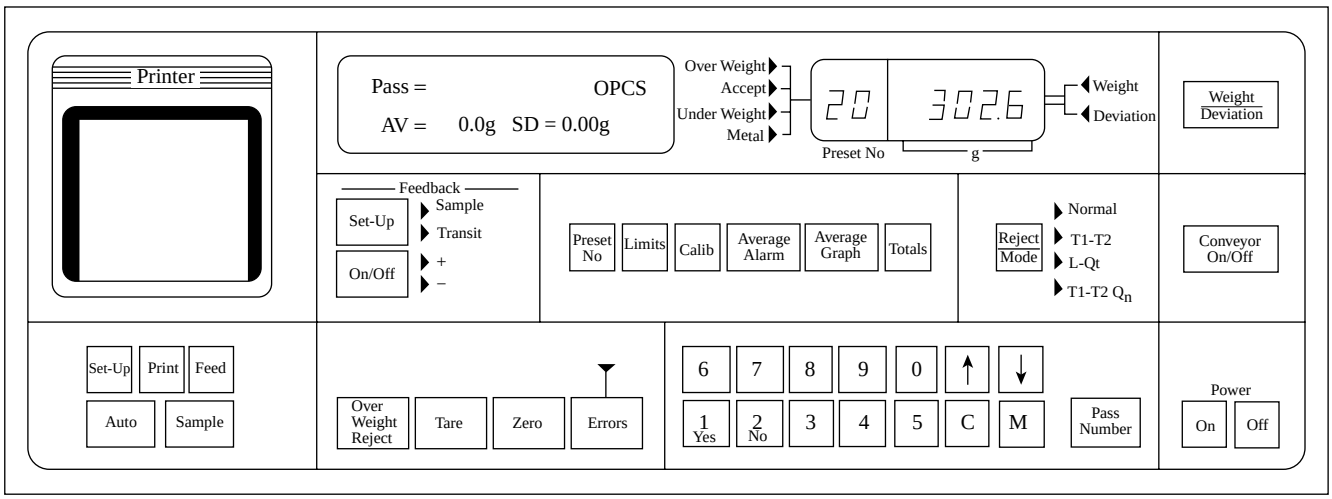

FIG. 7.25rr
The faceplate of a check-weigher controller.[12]

limits. For this purpose, the GEC Brainweigh microcomputer can be used, as it memorizes the geometry of most popular aircraft types and thereby provides quick and reliable measurements.[10]

Packaging Industry The packaging industry uses some of the most sophisticated scales. Net weighing scale technology has progressed substantially in recent years.

A new concept is the combination weighing system, which offers high packaging speeds. The system consists of a series of weighing heads with computer control. The Yamato Dataweigh design[11] with 16 heads is able to produce 160 packs per minute with weighing precision of 2000 graduations per scale range.

The command console with a 16 bit microprocessor provides all necessary controls and monitors the operation. System connection is via optical fiber cables which guarantees noise-free operation. Information or commands are entered by touching the appropriately labeled rectangles on the light emitting diode touch screen. Menu-driven software makes it easy to call up operational, monitoring, or diagnostic displays.

In-line check-weighers can provide more than weight control. As the packages travel across the weigh cell platform, they are transported on flying belts, chains, or ultra light ribbons. These systems can attain product speeds of 400 to 500 units per minute. In addition to rejecting out-of-spec packages, their most important feature is the feedback, which controls the filling machine for automatic optimal adjustment of fill. The modern check-weighers inform line operators of almost everything they want to know about the product and its statistical weight, record, and trend.

The face plate of modern Yamato check-weigher is shown in Figure 7.25rr. Four reject modes and programmed, including the T1-T2-Qn modes in full compliance with International Electrotechnical Commission (IEC) legislation. The built-in bar graph indicator provides instant information on product weight deviation from the target. The stated accuracy is maintained up to a rate of 300 packs per minute.[12]

References

1. Keil, S. and Hellwig, R., "Minimize Weighing Error Through Proper Load Cell Installation," *InTech*, January 1987.
2. Siemens, "Siwarex R Bending Ring Load Cells," catalog no. 05.91.
3. Paul, H., "Load Cells of Small Nominal Load Using Thin Film Strain Gauges," *Weighing and Force Measurement in the 90's*, Kemény, T., Ed., Portland, OR: IMEKO TC Events Series, 1991.
4. "BS 5750 for Mettler-Toledo," Company News, *Measurements and Control*, Vol. 24, July–August 1991, p. 187.
5. Hottinger Baldwin Messtechnik, Press Release, Issue 318, Hannover Fair, Frankfurt, Germany, 1991.
6. Grottker, U. and Glimm, I., "Personal Computers as Part of Measuring Instruments Subject to Verification," Proceedings of the OIML Weighing Conference in Braunschweig, Germany, 1991.
7. Rohde-Wanders, G., "Free Programmable PC for Calibrated Measurement," Proceedings of the OIML Weighing Conference in Braunschweig, Germany, 1991.
8. Weiler, W.W., "A New Method and Equipment for the Calibration of Weighing Machines and Force Measuring Devices," *Weighing and Force Measurement in the 90's*, Kemény, T., Ed., Portland, OR: IMEKO TC Events Series, 1991.
9. Payne, B., "Aircraft Weighing," *Measurements and Control*, Vol. 24, May 1991, pp. 102–104.
10. "Brainweigh," General Electrodynamics Corp. Catalog, Arlington, TX, 2002.
11. "Dataweigh," Yamato Scale Company Catalog, Hyogo, Japan, 2002.
12. "Checkweigher," Yamato Scale Company Catalog, Hyogo, Japan, 2002.
13. Hofmann, E., Das BMFT-Verbundprojekt Feldbus, Automatisierungstechnische Praxis 1988, 5, pp. 212–216.
14. McKenna, F. et al., "ISIbus-Fieldbus for High-Speed Communication," *Measurements and Control*, Vol. 24, July–August 1991, pp.173–175.
15. "Momentum-Based Weighing I/O Module of Modicon," refer to www.Modicon.com or contact gilles.heinrich@modicon.com.

© 2003 by Béla Lipták

Bibliography

Brecker, S., "Ten rules for installing a belt scale," *Powder and Bulk Engineering*, September 1996.

Beckett, R.H., "Control Considerations for Applying Pneumatic Load Cells to Gravimetric Feeders," Instrumentation, Systems, and Automation Society Conference, Philadelphia, PA, October 1970.

Cadou, P. and Homer, C., "Flat-Belt Weigh Feeder Accuracy: How to Achieve It, Maintain It, and Verify It," *Powder and Bulk Engineering*, September 1997.

Colijn, H., Ed., *Weighing and Proportioning of Bulk Solids*, Zurich: Trans Tech Publications, 1983.

Electronic Weigh Systems Handbook, BLH Electronics, Canton, MA, latest edition.

Elengo, J.J., Jr., "Selecting and Applying Load Cells," *Instruments and Control Systems*, September 1980.

Fraade, D.J., "Load Cells for Batch Weighing," *Instrumentation Technology*, December 1977.

Hollander, D., "Weighing in with Bolt-On Sensors," *InTech*, December 1989.

Kemény, T., Ed., *Weighing and Force Measurement in the 90's*, Portland, OR: IMEKO TC Events Series, 1991.

Morris, H.M., "Measuring Force in Difficult or Varying Environments," *Control Engineering*, September 1978.

National Bureau of Standards "Specifications, Tolerances, and Other Technical Requirements for Weighing and Measuring Devices," *Handbook 44*, Washington, D.C., 1979.

Norden, K.E., *Handbook of Electronic Weighing*, New York: John Wiley & Sons, 1998.

Omegadyne, Inc., *Omegadyne Pressure, Force, Load, Torque Databook*, Sunbury, OH, 1996.

Samuels, F.L.N., "Community Legislation and Its Impact on European Weighing Equipment Manufacturers," South Yorkshire Joint Trading Standards Committee Conference, London, 1990.

Scale Manufacturers Association, "SMA Standard for Shock and Overload Protection of Scales," 1st ed., SMA SOP 04-99, Naples, FL, 1999 (www.scalemanufacturers.org; available for download).

Scale Manufacturers Association, "SMA Recommendation on Electrical Distrubance,"1st ed., SMA RED 04-99, Naples, FL, 1999 (www.scalemanufacturers.org; available for download).

Scale Manufacturers Association, "SMA Standard for Scale Serial Communication Protocol, Levels #1 and #2,"1st ed., SMA SCP 04-99, Naples, FL, 1999 (www.scalemanufacturers.org; available for download).

Scale Manufacturers Association, "SMA Provisional Standard for Load Cell Standardization,"1st ed., SMA LCS 04-99, Naples, FL, 1999 (www.scalemanufacturers.org; available for download).

Shapiro, B.H., "Strain Gauge Transducers Show Long Term Stability," *Control Engineering*, Vol. 31, No. 2, 1984.

Stefan, K. and Hellwig, R., "Minimize Weighing Error through Proper Load Cell Installation," *InTech*, January 1987.

Stein, P., Kemény, T., and Haurilla, K., "Golden Book of Strain Gauges and Load Cells," Hauppauge, NY: Nova Science Publishers, 1991.

Vervuren, W., "Load Cells and Their Environment, *Weighing and Force Measurement in the 90's*, Kemény, T., Ed., Portland, OR: IMEKO TC Events Series, 1991.

Weiler, W.W., "A New Method and Equipment for the Calibration of Weighing Machines and Force Measuring Devices," *Weighing and Force Measurement in the 90's*, Kemény, T., Ed., Portland, OR: IMEKO TC Events Series, 1991.

Wieringa, H., Ed., "Mechanical Problems in Measuring Force and Mass," Dordrecht: Martinus Nijhoff Publishers, 1986.

Yeager, B., "How to troubleshoot your electronic scale," *Powder and Bulk Engineering*, September 1995.

© 2003 by Béla Lipták

Analytical Instrumentation

8

8.1
Analyzer Application and Selection 1144

Introduction 1144
The Selection Process 1144
Problem Definition 1144
Information Gathering 1145
Technique or Analyzer Selection 1147
Specificity (Selectivity) 1148
Accuracy and Precision 1148
Calibration 1148
Analysis Frequency 1149
Kinds of Analyzers 1149
Separation Techniques 1149
Other Separation Techniques 1150
Spectroscopic or Radiant Energy Techniques 1150
Ultraviolet and Visible 1150
Fluorescence 1151
Infrared and Near-Infrared 1151
Raman 1152
Microwave and Radio Frequency 1152
Refractometry 1153
Turbidity and Particle Size 1153
Nuclear Techniques 1153
Electrochemical Sensors 1154
Potentiometric 1154
Conductive 1156
Amperometric 1156
Chemical Techniques 1156
Miscellaneous Techniques 1156
Quartz Crystal Microbalances 1156
Mass Spectrometry 1157
Nuclear Magnetic Resonance 1157
Analyte-Specific Techniques 1157
Water 1157
Oxygen 1157
Sampling 1157
Probe Cleaners 1159
Analyzer Location 1161
Handling the Data 1162
Maintenance 1162
Cost 1162
Summary 1163
References 1168
Bibliography 1168

8.2
Analyzer Sampling: Process Samples 1170

Introduction 1171
General Considerations 1171
Feasibility Evaluation 1171
Sample Data Requirements 1171
Sample Takeoff Point 1172
Sample Transport 1173
Transport Lag 1173
Sample Disposal 1174
Ambient Considerations 1174
Test and Calibration 1174
Components of Sampling Systems 1175
Selecting the System Components 1175
Filter Designs 1175
Separating Liquids from Gases 1175
Spargers, Packed Towers, and Strippers 1176
Separating Two Liquid Phases 1177

© 2003 by Béla Lipták

Removing Gas Bubbles from Liquids 1178
Slipstream and Bypass Filters 1178
Self-Cleaning and Rotary Disc Filters 1179
Keeping Probes Clean 1179
Homogenizers 1180
Sample Conditioning 1180
Vaporizing Samples 1182
Entrainment Removal 1182
Selection of Component Materials 1182
Applications 1183
Gas Sampling Probes 1183
Stack Gas Sampling 1183
Automatic Stack Sampling 1183
Automatic Liquid Samplers 1184
Sampling of High-Pressure Condensate 1184
Chemical Reactor Samplers 1184
Duckbill Samplers 1185
Solids Sampling 1185
Sampling Difficult Processes 1186
Trace Analysis Sampling 1186
Multistream Switching 1187
References 1188
Bibliography 1188

8.3
Analyzer Sampling: Stack Particulates 1189

Introduction 1189
The EPA Particulate Sampling System 1189
Microprocessor-Controlled Stack Sampling 1189
The Pitot Tube Assembly 1190
Type S Pitot and the Sampling Probe 1190
Selecting the Sampling Point 1192
Traversing Point Locations 1192
Pitot Tube Calculation Form 1192
Sampling Velocity for Particle Collection 1192
Isokinetic Sampling 1192
Heated Compartment (Hot Box) 1193
Ice-Bath Compartment (Cold Box) 1193
Control Unit 1195
Automatic Sampling Trains 1195
Sampling for Gases and Vapors 1196
References 1196
Bibliography 1197

8.4
Analyzers Operating on Electrochemical Principles 1198

Introduction 1199
Voltametric Analysis 1199
Current, Voltage, and Time 1200
Potentiometry 1201
Galvanic and Electrolytic Probes 1201
Membrane-Covered Probes 1202
Amperometry 1202
Solid Electrodes 1203
Polarography 1204
Advantages 1205
Coulometry 1205
Controlled Potential Coulometry 1205
Conclusions 1205
Limitations 1206
Advances 1206
Reference 1206
Bibliography 1206

8.5
Air Quality Monitoring 1207

Introduction 1207
Air Quality Monitoring Systems 1207
Purpose of Monitoring 1208
Impact of Single Sources 1208
Research Needs 1209
Monitoring in Urban Areas 1209
Sampling Site Selection 1210
Static Methods of Air Monitoring 1210
Dust-Fall Jars 1211
Lead Peroxide Candles 1211
Other Static Methods 1211
Laboratory Analyses 1211
Automatic Monitoring 1212
Sensors 1212
Data Transmission 1212
Data Processing 1213
Averaging Times 1213
Displays 1213
Audits 1213
Automatic Analyzers 1213
Infrared Spectrometers 1213
Handheld Indoor Air Quality Monitors 1214
Sampling of Ambient Air 1214
General Air Sampling Problems 1214
Sampling for Gases and Vapors 1216
Absorption 1217
Liquid Absorption 1217
Impingers 1217
Fritted Absorber 1217
Adsorption 1218
Freeze-Out Sampling 1218
Sampling of Particulates 1218
Air Filters 1219
Fiberglass Filters 1219
Impingement and Impaction 1219
Impactors 1219
Electrostatic Precipitation 1220
Thermal Precipitators 1220

© 2003 by Béla Lipták

Reference 1221
Bibliography 1221

8.6
Biometers 1222

Introduction 1222
ATP Analysis 1222
Luminescence Biometer 1223
Reference 1223
Bibliography 1223

8.7
Biological Oxygen Demand, Chemical Oxygen Demand, and Total Oxygen Demand 1224

Introduction 1224
Oxygen Demand 1225
The Seed 1225
pH 1225
Temperature 1225
Toxicity 1225
Incubation Time 1226
Nitrification 1226
Biological Oxygen Demand 1226
Five-Day BOD Procedure 1226
DO Determination and Standards 1226
Instrumentation 1226
Extended BOD Test 1227
Manometric BOD Test 1227
Automatic Recording 1228
BOD Assessment in Minutes 1228
Electrolysis System for BOD 1229
Chemical Oxygen Demand 1229
Standard Dichromate COD Procedure 1229
COD Detector 1229
Automatic On-Line Designs 1229
Total Oxygen Demand 1231
Sample Valves 1231
Oxygen Detector 1232
Calibration 1232
Interferences 1232
Applications 1233
Correlation between Measurement Techniques 1233
Variations in Oxygen Demand 1233
BOD and COD Correlation 1233
BOD and Other Methods 1233
References 1234
Bibliography 1234

8.8
Calorimeters 1235

Introduction 1235
Terminology 1236
British Thermal Unit 1236
BTU Dry 1236
BTU Saturated 1236
Combustion Air Requirement Index 1236
Gross Calorific Value 1236
Net Calorific Value 1236
Wobbe Index 1236
Units, Accuracy, and Output Signals 1236
Design Variations 1238
Water-Temperature-Rise Calorimeter 1238
Air-Temperature-Rise Calorimeter 1238
Airflow Calorimeter 1238
Residual Oxygen Calorimeter 1239
Chromatographic Calorimeter 1240
Expansion Tube Calorimeter 1240
Adiabatic Flame Temperature 1240
Thermopile Calorimeter 1240
Applications 1240
Sample Conditioning 1241
Conclusion 1241
Reference 1241
Bibliography 1241

8.9
Carbon Dioxide 1242

Introduction 1243
Ambient Air Measurement 1243
Nondispersive Infrared Type 1243
Gas Filter Correlation Type 1244
Source Measurement 1244
Bibliography 1244

8.10
Carbon Monoxide 1245

Introduction 1246
Calibration Techniques 1246
Nondispersive Infrared Analyzers 1247
Interferences 1247
Gas Filter Correlation 1247
Mercury Vapor Analyzer 1248
Gas Chromatograph 1248
Electrochemical Analyzer 1248
Portable Monitors 1249
Catalytic Analysis 1249
Spot Sampling of Ambient Air 1249
Conclusions 1250
References 1250
Bibliography 1250

8.11
Chlorine 1251

Introduction 1252
Residual Chlorine Analyzers 1252

© 2003 by Béla Lipták

Colorimetric Analyzers 1253
Automatic Colorimetric Analyzer Features 1253
Amperometric Analyzers 1254
Types of Amperometric Analyzers 1254
Free Residual Chlorine Analysis 1254
Membrane Probes 1255
Buffers and Reagents 1256
Electrode Cleaners 1256
Conclusions 1256
Bibliography 1257

8.12 Chromatographs: Gas 1258

Introduction 1259
Basic Chromatographic Instrumentation 1260
Components of a Process Gas
Chromatograph 1261
Analyzer 1262
Oven 1262
Valves 1263
Rotary Valve 1263
Sliding Plate 1264
Diaphragm 1265
Columns 1265
Packed Columns 1265
WCOT (Capillary) Columns 1266
Column and Valve Configurations 1266
Hardware 1267
Sample Injection 1267
Backflush 1268
Heart-cutting 1269
Detectors 1269
Thermal Conductivity Detector 1270
Flame Ionization Detector 1271
Flame Photometric Detector 1272
Pulsed Flame Photometric Detector 1273
Orifice-Capillary Detector 1274
Miscellaneous Detectors 1275
Photoionization Detector 1275
Electron Capture Detector 1275
Discharge Ionization Detectors 1276
Carrier Gas Flow Control 1277
Programmer-Controller 1277
Programmer 1278
Peak Processor 1278
Data Acquisition 1278
Input–Output 1278
Communication 1278
Operator Interface 1280
Alarms and Diagnostics 1281
Quantitation 1281
Sample Handling 1281
Sample Probe 1282
Sample Transport 1282
Sample Conditioning 1283
Multistream Analysis 1283
Sample Disposal 1285
Installation 1286
Summary 1287
Acknowledgment 1287
References 1287
Bibliography 1288

8.13 Chromatographs: Liquid 1289

Introduction 1289
Comparison with Gas Chromatographs 1290
Carrier Flow 1290
The Main Components 1290
HPLC Column Selectivity and Resolution 1290
Carrier Supply 1291
Supply Pumps 1291
Pressure and Flow Controls 1291
Valves 1291
Columns 1292
Liquid–Partition Columns 1292
Liquid–Adsorption Columns 1292
Gel–Permeation Columns 1292
Ion Exchange Columns 1293
Electrophoresis 1293
Detectors 1293
Optical Absorbance 1293
Refractive Index 1293
Dielectric Constant 1293
Applications 1293
Reference 1293
Bibliography 1293

8.14 Coal Analyzers 1295

Introduction 1295
Thermogravimetry 1295
Bituminous Coal Analysis 1295
Gross Calorific Value 1296
Total Sulfur Analysis 1296
Ash Analysis 1297
On-Line Monitors 1297
Gamma-Based Analyzers 1298
Recent Developments 1298
References 1298
Bibliography 1298

8.15 Colorimeters 1299

Introduction 1300
Color Measurement 1300
Absorbance and Transmittance Colorimetry 1300

© 2003 by Béla Lipták

Spectrophotometric Analyzers 1300
Spectrophotometer Design 1301
Tristimulus Method (Reflectance) 1301
The Lab Algorithm of the Textile Industry 1302
Continuous Color Monitors 1303
In-Line Liquid Color Measurement 1303
On-Line Shade Monitors 1303
References 1303
Bibliography 1303

8.16
Combustibles 1304

Introduction 1305
Selection Considerations 1305
Terminology, Definitions, and Background Information 1305
Catalytic Combustion on a Heated Filament 1306
Limitations 1306
Measuring Circuits 1307
Thermocouple Detector 1307
Wheatstone Bridge Detector 1307
Diffusion Head Analyzers 1308
Sampling System 1308
Accessories 1309
Selection of Complete Installation 1309
Remote Head System 1309
Multiple Head System 1309
Tube Sampling System 1310
Conclusions for Catalytic Detectors 1310
Flame Ionization and Photoionization Detectors 1311
Flame Ionization Detectors 1311
Photoionization Detectors 1311
Infrared Combustibles Detectors 1311
Point Infrared Systems 1312
Area (Open-Path) Infrared Systems 1313
Hydrocarbon Gases in the Atmosphere 1314
Point Measurement 1315
Bibliography 1315

8.17
Conductivity Analyzers 1316

Introduction 1316
Theory of Operation 1317
The Cell Constant 1317
Cell Dimensions 1318
Two-Electrode Cells 1319
Four-Electrode Measurement 1319
Electrodeless Cells 1319
Measurement Applications 1320
Concentration Measurements 1320
High-Purity Water Measurements 1320
Corrosive and Fouling Applications 1320
Calibration and Maintenance 1321
Calibration of Conductivity Sensors 1321
Maintenance of Conductivity Cells 1322
Conclusion 1322
References 1322
Bibliography 1322

8.18
Consistency Analyzers 1323

Introduction 1323
In-Line Consistency Measurement 1324
Mechanical Devices 1324
Probe Type 1324
Blade Types 1325
Rotating Sensors 1325
Optical Sensors 1326
Measuring Woodfree Pulp 1326
Consistency of Pulp Containing Wood 1326
Summary 1328
References 1328
Bibliography 1328

8.19
Corrosion Monitoring 1329

Introduction 1329
Corrosion Monitoring Techniques 1329
Corrosion Coupon Monitoring 1330
Time of Exposure 1331
Advantages and Limitations 1332
Electrical Resistance Monitors 1332
Advantages and Limitations 1332
Linear Polarization Resistance Monitors 1333
Advantages and Limitations 1334
Bibliography 1334

8.20
Differential Vapor Pressure Sensor 1335

Introduction 1335
Design and Operation 1335
Limitations 1337
Reference 1338
Bibliography 1338

8.21
Dioxin Analysis 1339

Introduction 1339
Principle of Operation 1339
Sample Recovery 1339
Sample Extraction 1340
Analysis 1340
Conclusions 1341
Bibliography 1341

© 2003 by Béla Lipták

8.22
Elemental Monitors 1342

Introduction 1342
Atomic Absorption Spectrometer 1342
Inductively Coupled Plasma Detector 1343
Operating Principle 1344
Selecting among AA and ICP 1344
X-Ray Fluorescence Spectrometer 1344
Instrumentation 1345
Bibliography 1346

8.23
Fiber-Optic Probes 1347

Introduction 1347
Principle of Measurement 1347
Instrumentation 1347
Glass Optical Fiber 1348
Plastic Optical Fiber 1348
Probes 1348
Wand Probe 1348
Spectra-Caliper Probe 1348
Transmission Probe 1348
Long-Path-Flow Tube 1349
GEM Probe 1349
Six-to-One Probe 1349
Sample Interfaces 1350
Detectors 1350
Software 1350
Applications 1350
Absorption 1350
Fluorescence 1350
Optrodes 1351
Oxygen Probe 1351
Scattering 1351
Refractive Index 1352
Bibliography 1352

8.24
Fluoride Analyzers 1353

Introduction 1354
Types of Fluoride Compounds 1354
Analyzer Types 1355
Gas and Vapor Analyzers 1355
Detector Tubes 1355
Electrochemical Cells 1355
Paper Tape 1356
Ion Mobility Spectrometry 1356
Infrared Spectroscopy 1356
Ion-Specific Electrodes 1356
Silicon Dioxide Sensors 1356
Laboratory Methods 1356
Organic Fluoride Analysis 1357
Other Methods 1357
References 1357
Bibliography 1357

8.25
Hydrocarbon Analyzers 1358

Introduction 1359
Analyzer Types 1359
Flame Ionization Detectors 1359
Gas Chromatography 1360
Calibration 1361
Nonmethane Hydrocarbons 1361
Reactive Hydrocarbons 1361
Spectrometric Methods 1361
Laser-Induced Doppler Absorption Radar 1361
Spectroscopy Perimeter Monitoring 1362
Ion Mobility Spectroscopy 1362
Hydrocarbon Dew-Point Meter 1362
Calibration Methods 1362
Assessment 1362
Bibliography 1363

8.26
Hydrogen Sulfide 1364

Introduction 1365
Electrochemical Cells 1365
Gold-Film and Semiconductor Sensors 1365
Solid-State Sensors 1366
Lead Acetate Tape Staining 1366
Photometric Analysis 1367
Direct Photometric Analyzer 1367
Gas Chromatography with Flame Photometric Detector 1367
Tail Gas Analyzer 1367
Reference 1368
Bibliography 1368

8.27
Infrared and Near-Infrared Analyzers 1369

Introduction 1371
Principles of IR and NIR Analysis 1371
Beer–Lambert Law 1373
Definitions of Terms and Configurations 1374
IR Instrument Designs 1375
Single-Beam Configuration 1375
Dual-Beam Configuration 1375
Dual-Beam Design for Stacks 1376
Infrared Analyzers for the Laboratory 1377
Grating Spectrophotometers 1377
Filter Spectrometers 1377
Fourier Transform Spectrometers 1377
Tunable Lasers 1378

© 2003 by Béla Lipták

Laboratory Instruments in Process Measurement 1378
Infrared Analyzers for Process Applications 1378
Single-Component Analyzers 1378
Design Variations 1378
Gas Filter Correlation Spectrometers 1379
Filter Analyzers 1379
Multiple-Component Fixed Filter Analyzer 1380
Programmed Circular Variable Filter Analyzer 1380
Infrared Sources 1380
Infrared Detectors 1380
NDIR Detectors 1381
Thermal Detectors 1381
Photoconductive Detectors 1381
Selecting the Cell 1381
Path Length Selection 1381
Gas Cells 1381
Liquid Cells: Transmission Type 1382
Liquid Cells: Reflection Type 1382
Solid Samples 1382
Calibration: Sources of Analyzer Drift 1382
Linearity 1383
Packaging 1383
Applications and Advances 1383
Near-Infrared Analyzers 1384
Interpreting the Absorption Bands 1385
Sample Temperature Control 1385
Fiber Optics 1385
Types of NIRs 1385
Sources 1386
Gases 1386
Liquids 1386
Solids 1386
Calibration Transfer 1386
References 1386
Bibliography for Infrared Analyzers 1386
Bibliography for Near-Infrared Analyzers 1387

8.28
Ion-Selective Electrodes 1388

Introduction 1388
The Nernst Equation 1389
The Reference Electrode 1390
Concentration and Activity 1391
Ionic Strength Adjustment Buffers 1391
Temperature Effects 1392
The Isopotential Point 1392
Role of Electrode Internals and Calibration 1392
System Accuracy 1393
Laboratory Devices 1393
Process Applications 1393
Types of Electrodes 1393
Glass 1393
Solid State 1394
Liquid–Ion Exchange 1395
Measurement Range 1395
Interferences 1396
Solution Interference 1396
Calibration Solutions 1396
Advantages and Disadvantages 1397
Precision and Accuracy 1398
Conclusions 1398
References 1398
Bibliography 1398

8.29
Mass Spectrometers 1399

Introduction 1399
Principle of Operation 1400
Sample Input 1400
Sample Ionization 1400
Ion Separation 1400
Magnetic Sectors 1401
Quadrupole Filter 1402
Ion-Trapping Section 1403
Time-of-Flight Filter 1403
Ion Detection 1403
Vacuum Environment 1404
Data Reduction and Presentation 1404
Residual Gas Analyzers 1405
Conclusions 1405
Bibliography 1405

8.30
Mercury in Ambient Air 1407

Introduction 1408
Sample Collection and Concentration 1408
Impinger Collection Methods 1408
Particulate Sampling 1408
Vapor Sampling 1409
Amalgamation on Wettable Metals 1409
Sampling Tubes 1409
Activated Absorption 1410
Conversion of Mercury Vapors 1410
Methods of Detection 1410
Ultraviolet Light Absorption 1410
Atomic Absorption Spectrophotometry 1410
Flameless Atomic Absorption Spectroscopy 1410
Colorimetric Methods 1411
Dithizone 1411
Selenium Sulfide and Others 1411

© 2003 by Béla Lipták

Gas Chromatography for Mercury Organics 1411
Atomic Fluorescence Spectroscopy 1411
Other Analytical Procedures 1412
References 1412
Bibliography 1412

8.31 Mercury in Water 1413

Introduction 1414
Total Mercury Detection 1414
Sample Treatment 1414
Colorimetric Detection 1414
Interference by Copper 1415
Analysis Procedure 1415
Atomic Absorption Spectrophotometry 1415
Analysis Procedure 1416
On-Line Measurement 1416
Organic Mercury Detection 1416
Sample Treatment 1416
Gas Chromatography 1417
Thin-Layer Chromatography 1418
Bibliography 1419

8.32 Moisture in Air: Humidity and Dew Point 1420

Introduction 1421
Definitions 1422
Relative Humidity Sensors 1422
Wet and Dry Bulb Hygrometers 1422
Wet-Dry Bulb Hygrometers 1422
Assman Psychrometers 1424
Calculation of Relative Humidity 1424
Hair Hygrometers 1424
Cellulose Hygrometers 1425
Solution Resistance Elements (Dunmore Cells) 1425
Polystyrene Surface Resistivity (Pope Cells) 1425
Thin-Film Capacitance 1425
Metal Oxide Sensor 1426
Polymer Sensor 1427
Autocalibration 1427
Dew-Point Hygrometers 1428
Solution-Conductivity Type 1428
Installation 1428
Sampling System 1428
Limitations 1429
Condensation on a Chilled Surface 1429
Surface Conductivity Type 1429
Sampling System 1429
Limitations 1430
Chilled-Mirror Type 1430
Cooling Methods 1430
Automatic Standardization 1431
Limitations 1431
Cycled Chilled-Mirror Probe 1432
Moisture Indicators 1432
Microprocessor-Based Indicators 1432
Conclusion 1433
References 1433
Bibliography 1433

8.33 Moisture in Gases and Liquids 1434

Introduction 1435
Laboratory Analyzers 1435
Process Analyzers 1435
Sampling Systems 1435
Electrolytic Hygrometer 1436
Avogadro's Law 1436
Recombination Effect 1437
Cell Limitations 1437
Liquid Samples 1438
Sampling System 1438
Capacitance Hygrometer 1438
Sampling Systems 1439
Thin-Film Capacitance Probes 1439
Limitations 1439
Impedance Hygrometer 1440
Installation 1441
Sampling System 1441
Limitations 1441
Piezoelectric Hygrometer 1441
Sampling System 1442
Limitations 1442
Heat-of-Adsorption Hygrometer 1442
Sampling System 1443
Limitations 1443
Infrared Absorption Hygrometer 1443
Sampling System 1443
Limitation 1444
Microwave Absorption Hygrometer 1444
Limitations 1444
Dipole Polarization Effect Moisture Sensor 1444
Sampling System 1445
Limitations 1445
Cavity Ring-Down Spectroscopy (CRDS) Moisture Analysis 1445
Sampling System 1445
Limitations 1445
Neutron Backscatter Moisture On-Line Analyzer 1445
Sampling System 1446
Limitations 1446
Calibration of Moisture Analyzers 1446

© 2003 by Béla Lipták

Limitations 1448
Bibliography 1448

8.34
Moisture in Solids 1450

Introduction 1451
Laboratory Analyzers 1451
Karl Fischer Titration 1451
Industrial Detectors 1451
Nuclear Moisture Gauge 1451
Theory of Operation 1451
The Measuring System 1452
Limitations 1452
Infrared Absorption or Reflection 1452
Measurement and Installation 1452
Limitations 1453
Microwave Attenuation 1453
Basis Weight Compensation 1453
Moisture in Coal 1453
Sugar Industry Applications 1454
Capacitance Moisture Gauge 1454
Sensor Designs 1454
Capacitance Measurement 1455
Limitations 1455
Resistance Moisture Gauge 1455
Limitations 1455
Impedance Moisture Gauge 1456
Nuclear Magnetic Resonance 1456
Radio Frequency Absorption 1456
Conclusions 1456
Bibliography 1456

8.35
Molecular Weight 1457

Introduction 1458
The Average Molecular Weight 1458
Osmometers 1459
The Membrane Osmometer 1459
Automatic Osmometers 1459
Vapor Pressure Osmometers 1460
Light-Scattering Photometer 1461
The Zimm Plot 1461
The Photometer 1462
Viscometers 1462
Viscosity vs. Molecular Weight 1463
Intrinsic Viscosity 1463
Gel-Permeation Chromatography 1463
Differential Refractometer Sensor 1463
The Complete Instrument 1464
Molecular Weight from Chromatograph Output 1464
End Group Determination 1466
Electron Microscope 1466
Transmission Electron Microscope 1466
Advantages and Limitations 1466
Ultracentrifuge 1467
Sedimentation Velocity 1467
Sedimentation Equilibrium 1467
Instrument Construction 1467
Conclusions 1467
Bibliography 1467

8.36
Nitrate, Ammonia, and Total Nitrogen 1469

Introduction 1469
Environmental Significance 1469
Nitrification and Denitrification 1470
Ammonia Nitrogen 1470
Ammonium and Total Nitrogen Probes 1470
Chemiluminescence 1471
Nitrite Measurement 1471
Nitrate Measurement 1471
Total Nitrogen 1472
Kjeldahl Method 1472
Chemiluminescence Analyzer 1472
References 1473
Bibliography 1473

8.37
Nitrogen Oxide Analyzers 1474

Introduction 1475
Industrial Emission Monitoring 1475
Paramagnetic Analyzers 1475
Thermal Conductivity Analyzers 1475
Nondispersive Infrared Analyzers 1475
Ultraviolet Analyzers 1475
Chemiluminescent Analyzers 1475
Electrochemical Sensors 1475
Gas Chromatography 1477
Ambient Air Monitoring 1477
Calibration Methods 1477
Dynamic Calibration 1477
Static Calibration 1477
$NO–NO_2$ Combination Analysis 1477
Series Analysis 1478
Colorimetric Determination 1478
The Griess–Saltzman Method 1478
The Jacobs–Hochheiser Method 1478
Portable Monitors 1479
Conclusions 1479
References 1479
Bibliography 1479

8.38
Odor Detection 1480

Introduction 1481
The Measurement of Odor 1481

© 2003 by Béla Lipták

Sensitivity 1481
Flexibility 1481
The Gas Chromatograph 1481
The Human Olfactory System 1482
Sample Preparation 1482
Odor Panels 1482
Training of an Odor Panel 1483
Tests 1483
The Electronic Nose 1483
Polymeric Film Sensors 1483
Metal Oxide Sensors 1484
Other Sensors 1484
Training 1484
Applications 1484
References 1484
Bibliography 1484

8.39
Oil in or on Water 1486

Introduction 1486
Process Industry Measurements 1486
Capacitance-Type Water-in-Oil Detectors 1487
Radio-Frequency (Microwave) Sensors 1487
Rag Layer and Tank Profiler Sensors 1487
Water-in-Oil Probes 1487
Conductivity and Capacitance Sensors 1488
Ultrasonic Sensors 1488
Nuclear Sensors 1489
Ultraviolet Oil-in-Water Analyzer 1489
Environmental Pollution Sensors 1490
On-Off Oil-on-Water Detector 1491
Continuous Oil-on-Water Detector 1491
Oil-Thickness-on-Water Detector 1491
Oil-in-Water Detector 1491
Conclusions 1492
Reference 1492
Bibliography 1492

8.40
Open Path Spectrophotometry (UV, IR, FT-IR) 1493

Introduction 1493
Applications 1494
Toxic Sensor Types 1494
Instrument Designs 1494
Blackbody Radiation Interference 1495
Interferometry 1496
Beer's Law and Path Integrated Concentrations 1496
Path Integrated Concentration 1496
Open Path FTIR Spectrometry 1496
Interferometer 1497
Transfer Optics and the Detector 1497
Data System/Controller 1497
Configurations 1497
Open Path Ultraviolet Spectrometry 1498
The OP-UV Spectrometer 1498
Open Path Tunable Diode Laser Spectrometry 1499
Diode Lasers 1501
Applications 1502
Principle of Operation 1502
Wavelength Modulation Spectrometry 1502
Open Path Detection of Combustibles 1503
OP-HC Detector Design 1504
Sources and Interference 1504
Transmitter–Receiver Separation 1504
Advantages and Limitations 1505
References 1505
Bibliography 1505

8.41
Oxidation-Reduction Potential (ORP) 1506

Introduction 1507
ORP Measurement Principles 1508
The ORP Reaction 1508
Half-Cell Reactions 1508
Half-Reaction 1509
Half-Reaction 1509
Overall Reaction 1509
The Cell Potential 1509
Cell Potential at Equivalence Point 1509
Chromium Example 1509
Microprocessor-Based Units 1510
ORP Sensors 1510
The Nernst Equation 1511
Electrode Mounting 1511
ORP Applications 1512
Chromium Reduction 1512
ORP Maintenance 1512
ORP Control 1512
Residence Time 1513
References 1513
Bibliography 1513

8.42
Oxygen in Gases 1514

Introduction 1515
Paramagnetic Oxygen Detectors 1515
Deflection Analyzer 1516
Thermal Analyzer 1516
Dual-Gas Analyzer 1517
Catalytic Combustion Oxygen Detectors 1517
Electrochemical Oxygen Detectors 1518
High-Temperature Zirconium Oxide Fuel Cells 1518

© 2003 by Béla Lipták

Cell Design and Limitations 1519
Self-Diagnostics and Self-Cleaning 1520
High-Temperature Current-Mode Oxygen Detectors 1520
Galvanic Detectors 1520
Capillary Systems 1521
Detector Design 1521
Advantages and Limitations 1521
Coulometric Sensor 1522
Polarographic Sensor 1522
Spectroscopic Oxygen Detection 1522
Mass Spectroscopy 1522
Near Infrared Spectroscopy 1522
TDLAS Designs 1523
Other Oxygen Detection Methods 1524
Reference 1524
Bibliography 1524

8.43
Oxygen in Liquids (Dissolved Oxygen) 1526

Introduction 1527
Probe Cleaners and Newer Sensors 1527
Polarographic Cell 1528
Sample Temperature and Flow 1528
Galvanic Cell 1528
Cell Designs 1529
Special and Flow-Through Cells 1529
Probe Design 1529
Installation 1530
Flow-Through Design 1530
Coulometric Sensor 1531
Multiple-Anode Detector 1531
Thallium Cells 1531
Thallium Differential Conductivity Analyzer 1531
Fluorescence-Based Sensors 1532
Sensor Design and Operation 1532
Other Detection Methods 1532
Operational Considerations for All Sensors 1532
Calibration Methods 1533
Temperature Compensation 1533
Pressure Effects 1534
Salinity Effects 1534
Application Considerations 1534
Mounting Considerations 1535
Bibliography 1535

8.44
Ozone in Gas 1536

Introduction 1536
Ozone Monitoring 1537
Monitor Designs 1537
Ultraviolet Analyzer 1537
Single-Beam Design 1537
Double-Beam Design 1537
Amperometric Design 1538
Calibration 1539
Thin-Film Semiconductor Design 1539
References 1539
Bibliography 1539

8.45
Ozone in Water 1540

Introduction 1541
Drinking Water Disinfection 1541
Amperometric Sensors 1541
Bare Metal Electrodes 1541
Membrane-Type Designs 1541
Stripping and Gas Phase Monitors 1542
Ultraviolet Absorption 1542
Colorimetric Method 1542
The Indigo Method 1542
References 1543
Bibliography 1543

8.46
Particulates, Opacity, Dust, and Smoke 1544

Introduction 1545
Definitions and Theoretical Concepts 1545
Opacity Measurement 1546
Units and Definitions 1546
Dust Loading 1546
Ringelmann Card Numbers 1547
Stack Gas and Particulate Monitoring 1547
Particulate Sampling 1547
Stack Gas Monitoring Packages 1547
Light Attenuation and Transmissometers 1547
Single-Pass Configuration 1548
Double-Pass Configuration 1549
Relative Performance 1550
Optical Divergence 1551
Spectral Characteristics 1551
Optical Characteristics 1551
Air Purge 1551
Manual Stack Samplers 1551
Automatic Stack Samplers 1552
Broken Bag and Runway Visibility Sensors 1552
Ambient Air Opacity Monitoring 1552
Particulate Concentration 1552
High-Volume Sampler 1553
EPA Air Quality Goals 1553
Dichotomous Sampler 1553
Tape Sampler 1554
Soiling Index 1555
Light Scattering 1555

© 2003 by Béla Lipták

Nephelometers 1555
Piezoelectric Crystal Mass Balance 1555
Impaction Devices 1555
Calibration 1556
Radiometric Devices 1556
Charge Transfer (Triboelectricity) 1556
Surface Ionization 1556
Visual Observation 1556
Remote Sensing 1557
Conclusions 1557
References 1557
Bibliography 1557

8.47
Particle Size and Distribution Monitors 1559

Introduction 1560
Particle Size and Distribution 1560
Application Objectives 1560
Detectors and Sampling Systems 1560
Laboratory Monitors 1561
Sensing Small Samples 1561
Optical Microscopy 1561
Electron Microscopy 1561
Image Analyzers 1561
Electrical Sensing (Coulter Principle) 1561
Optical Scattering (Single Particle) 1561
Sensing Intermediate Samples 1561
Light Scattering (Multiple Particle) 1561
Sedimentation (Photo and X-Ray) 1561
Sensing Large Samples 1562
Sieving 1562
Optical Methods 1562
Ultrasonic Attenuation 1562
On-Line Measurement 1562
Optical Multiple-Particle Analyzer 1562
Airborne-Particulate Counter 1563
Bibliography 1563

8.48
pH Measurement 1565

Introduction 1566
Measurement Error 1566
Measurement Range 1566
Applications 1566
Theoretical Review 1567
Ion Concentrations 1567
pH Measurement 1568
Temperature Effects 1569
pH Electrodes and Sensors 1569
Flat Glass Electrodes 1569
Glasteel 1570
Metal Oxide pH Electrodes 1570
Ion-Selective Field Effect Transistors 1572
Fiber-Optic pH Measurement 1573
Relative Performance of pH Sensors 1573
Reference Electrodes 1573
Flowing and Double Junctions 1574
Combination Measurement/Reference Electrode 1574
Multiple Junction References 1575
Stiff Gel Reference 1575
Differential Reference 1575
Electrode Cleaners 1576
Shrouds and Filters 1576
Automatic Cleaners 1576
Ultrasonic Cleaners 1577
Brush Cleaners 1577
Water-Jet Cleaners 1577
Chemical Cleaners 1577
Automatic Retraction 1578
Manual Cleaning 1578
Application Problems 1578
High Salt Errors 1578
High Salt Effect on Electrodes 1579
High Acid Errors 1579
Temperature Errors 1579
Water Concentration Errors 1580
Nonaqueous Solutions 1580
Probe Coating and Low Conductivity 1580
Installation Methods 1581
Submersion Assemblies 1581
Retractable Units 1581
Median Selector 1582
Self-Diagnostics 1582
Glass Impedance Measurements 1582
Reference Electrode Impedance 1583
Sensor Fault Signaling 1583
Calibration 1583
Buffer Calibration Errors 1583
Conclusion 1583
References 1584
Bibliography 1584

8.49
Phosphorus Analyzer 1585

Introduction 1585
Phosphorus in Wastewater 1585
Colorimetric Analysis 1586
Laboratory Methods 1586
Continuous Analyzer 1586
Total Phosphates 1586
Flame Photometric Analysis 1587
Detector Operation 1587
Gas and Liquid Chromatography 1587
Sample-Handling Systems 1587
References 1588
Bibliography 1588

© 2003 by Béla Lipták

8.50
Physical Properties Analyzers—ASTM Methods 1589

Introduction 1590
Advantages of Continuous Analyzers 1590
Distillation Analyzers 1590
Laboratory Measurements 1590
ASTM Method D 86-IP-123 1590
ASTM Method D 1160 1590
ASTM Methods D 2887–89, D 3710–88 1592
On-Line Distillation Analyzers 1592
End-Point Distillation Analyzers 1592
Vacuum Distillation Analyzer 1593
Horizontal Still Distillation Analyzer 1594
Simulated Distillation by Gas Chromatography 1595
Calibration and Sampling 1595
Applications 1595
Vapor Pressure Analyzer 1595
Reid Method (ASTM Method D 323–90) Procedure A 1595
Dry Reid Method (ASTM Method D 4953–90) 1596
Liquefied Petroleum Gases (ASTM Method D 1267–89) 1596
Air-Saturated Vapor Pressure Analyzer—Continuous 1596
Air-Saturated Vapor Pressure Analyzer—Cyclic 1596
Dynamic Vapor Pressure Analyzer 1596
Calibration 1597
Application 1597
Vapor–Liquid Ratio Analyzers 1598
Volatility Test (ASTM Method D 2533–90) 1598
Continuous Vapor-Liquid Ratio Analyzer 1598
Calibration and Application 1598
Pour-Point Temperature Analyzers 1599
Pour-Point Test (ASTM Method D 97–87) 1599
Pour Point by Differential Pressure 1599
Viscous-Drag Pour Pointer 1600
Calibration 1600
Application 1600
Cloud-Point Analyzers 1600
Cloud-Point Tests (ASTM Method D 2500–88) 1600
Optical Cloud-Point Analyzer 1601
Calibration and Application 1601
Freezing-Point Analyzer 1601
Aviation Fuel Tests (ASTM Method D 2386–88) 1601
Freezing-Point Analyzer for Aviation Fuel 1602
Calibration and Application 1602
Flash-Point Analyzer 1602
Flash-Point Tests (ASTM Methods D 56–90 and D 93–90) 1602
Low-Temperature Flash-Point Analyzer 1602
High-Temperature Flash-Point Analyzer 1603
Calibration and Application 1603
Octane Analyzers 1603
Laboratory Tests (ASTM Methods D-2699 and D-2700) 1603
Standard Engine Octane Comparator Analyzer 1603
Reactor-Tube Continuous Octane Analyzer 1604
Calibration and Application 1604
Near-Infrared Analyzers 1604
Chemometrics 1604
Calibration and Application 1604
Bibliography 1605

8.51
Raman Analyzers 1606

Introduction 1607
Principles of Raman Spectroscopy 1607
Optical Spectroscopy 1607
Principles of Raman Scattering 1607
Raman Scattering and Spectral Information 1607
General Instrumentation 1609
Fourier Transform Raman Instrumentation 1610
Dispersive Raman Instrumentation 1610
Raman Process Analyzer Instrumentation 1611
Components of Raman Process Analyzers 1611
Laser Excitation Source 1611
Spectrometer 1612
Detector 1612
Fiber Optic Light Delivery and Collection 1612
Laser and Raman Filters 1613
Sample Interface 1613
Raman Probes 1613
Data Analysis, Modeling and Calibration 1614
Polymerization Application 1614
Multivariable Predictive Analysis 1614
Calibration Model 1614
Calibration Transfer 1615
Smart Diagnostics and Analyzer Maintenance 1616
Laser Safety 1616
Outputs and Communication 1616
Packaging 1616
Installation and Maintenance 1616
Probe Designs 1616
Advantages and Disadvantages 1617
Advantages 1617
Limitations 1618
Applications 1618
Polymer Industry 1618

© 2003 by Béla Lipták

Conclusion 1618
References 1619
Bibliography 1619

8.52 Refractometers 1620

Introduction 1621
RI and Brix Units 1621
Theory of Operation 1621
Critical Angle of Refraction 1622
Differential Refractometer 1623
Single-Pass Design 1623
Two-Pass Design 1623
Temperature Effects 1624
Flowing Reference Cell 1624
Critical-Angle Refractometer 1624
Mounting and Compensation 1624
Design Variations 1624
Reflected Light Measurement 1624
Fiber Optic Probe 1625
Capabilities and Limitations 1625
Conclusions 1626
Bibliography 1626

8.53 Rheometers 1628

Introduction 1628
Reasons for Using Rheometers 1628
Dynamic Mechanical Analysis 1629
Tests to Distinguish Liquids from Solids 1629
Shear-Strain Tests 1629
Stress-Controlled Tests 1630
Nonlinear Shear Flow Properties (μ, N_1, N_2) 1630
Rheometer Selection 1630
Rheometer Designs 1630
Cone-and-Plate Design 1630
Shear Flow Properties 1631
Torque Ranges 1631
Rheometer Selection 1632
Experimental Difficulties 1632
Dynamic Mechanical Analysis 1632
Linear Viscoelastic Shear Moduli G', G'' 1632
Molecular Weight Distribution 1633
Time-Temperature Superposition 1633
Conversion Among Rheological Properties 1634
Parallel-Disc Design 1634
Parallel-Disc Geometry 1634
Limitation 1634
Rectangular Torsion Design 1634
Coaxial-Cylinder Design 1635
Tension/Compression and Bending Designs 1635
Extensional Flow Rheometer 1635
Extensional Viscosity Detectors 1636
Capillary Rheometers 1636
Conclusions 1636
Bibliography 1636

8.54 Streaming Current or Particle Charge Analyzer 1637

Introduction 1637
Operating Principles 1637
The Streaming Current 1637
Calibration 1638
Applications 1638
Treatment Chemical Selection 1638
Sampling 1639
Control System 1639
Conclusions 1639
References 1639
Bibliography 1640

8.55 Sulfur-in-Oil Analyzers 1641

Introduction 1641
X-Ray Absorption Analyzer 1641
Method of Operation 1642
X-Ray Fluorescence 1642
Pulsed UV Fluorescence 1642
Fuel Analysis Spectrometer 1645
Bibliography 1645

8.56 Sulfur Oxide Analyzers 1646

Introduction 1647
Applications 1647
Industrial Analyzers 1648
Stack Sampling 1648
Nondispersive Infrared 1648
Ultraviolet 1649
Correlation Spectrometry 1649
Thermal Conductivity 1650
Ambient-Air Analyzers 1650
Ambient-Air Sampling 1650
Calibration 1650
Colorimetric Analyzers 1650
Conductimetric Analyzers 1650
Coulometric Analyzers 1651
Flame Photometric Analyzers 1651
Electrochemical Analyzers 1652
References 1652
Bibliography 1652

© 2003 by Béla Lipták

8.57
Thermal Conductivity Detectors 1653

Introduction 1653
Thermal Conductivity 1653
Measurement Ranges 1654
The TCD Analyzer 1654
Main Components 1654
The Detectors 1654
The TCD Cells 1655
Bridge Circuits 1656
Temperature Control 1656
Operation 1656
The Reference Filament 1657
Packaging and Calibration 1657
Limitations 1657
Hydrogen in Hydrocarbons 1657
Conclusions 1657
Bibliography 1657

8.58
Total Carbon Analyzers 1658

Introduction 1659
Advantages and Limitations 1659
Carbon Measurement Techniques 1659
Analyzer Development 1659
Official Methods of TOC Determination 1659
Detector Types 1659
Nondispersive Infrared (NDIR) Analyzers 1659
High-Temperature Combustion 1660
Wet Chemical Oxidation 1660
Inorganic Carbon 1661
Automatic On-Line Design 1661
Aqueous Conductivity 1662
On-Line Conductivity 1662
Coulometric Analysis 1662
Colorimetric Analysis 1662
Flame Ionization Detector 1663
References 1664
Bibliography 1664

8.59
Toxic Gas Monitoring 1666

Hazardous and Toxic Atmospheres 1667
Safety Instrument Performance Standards 1667
Types and Levels of Toxicity 1668
Extreme Toxicity 1668
Toxic Gas Measurement 1668
Related Sections 1668
Continuous Sensor Designs 1668
Chromatography 1670
Spectrometers 1671
Radon Detectors 1671
Electrochemical Sensors 1671
Oxygen Detectors 1671
Amperometric Toxic Sensors 1672
Number of Electrodes 1672
Sensor Compensation and Life 1672
Fixed Detectors 1673
Portable Detectors 1674
Discontinuous Dosage Sensors 1674
Color Change Badges 1674
Continuous Color-Change Monitor 1674
Color Detector (Dosimeter) Tubes 1674
Sorption-Type Dosimeters 1675
Passive Personal Dosimetry 1675
Active or Dynamic Sampling 1676
Liquid and Solid Fillings 1676
Calibration 1677
Dynamic Calibrators 1678
Bubbler/Dilution Calibrator 1678
Electrochemical Calibrating Gas Generators 1678
References 1678
Bibliography 1679
Web Links to Government Agencies 1679

8.60
Turbidity, Sludge, and Suspended Solids 1680

Introduction 1681
Light Absorption and Scattering 1681
Units of Turbidity 1681
Conversion among Turbidity Units 1681
Turbidity Analyzer Designs 1682
Forward-Scattering or Transmission Type 1682
Dual-Beam Design 1682
Laser-Type Meter 1683
Suspended Solids and Sludge Density Sensors 1683
Scattered Light Detectors (Nephelometers) 1683
Probe Design 1684
Backscatter Turbidity Sensors 1684
In-Line Units 1685
Density-Based Sensors 1685
Conclusions 1686
Bibliography 1686

8.61
Ultraviolet and Visible Analyzers 1687

Introduction 1688
UV Absorption 1688
Theoretical Aspects 1689
The Radiation Spectrum 1689
The Beer–Lambert Law 1689
Calibration 1690
UV-Absorbing Compounds 1690

© 2003 by Béla Lipták

UV Absorption Spectrum 1690
Applications 1691
UV Analyzer Components 1691
Radiation Sources 1691
Broad and Discrete Line Sources 1692
Selecting the Measuring Wavelength 1692
The Monochromator 1692
The Measuring Cell 1693
Detectors 1693
Readouts 1693
UV Analyzer Designs 1693
Single-Beam Analyzer 1693
Split-Beam Analyzer 1694
Dual-Beam, Single-Detector Analyzer 1695
Dual-Beam, Dual-Detector Analyzer 1695
Flicker Photometer 1695
Photodiode Array Spectrophotometers 1696
Scanning Spectrophotometers 1697
Retroreflector Probes 1697
Visible and NIR Photometers 1698
Visible Photometers 1698
Near-Infrared Photometers 1698
Conclusions 1699
References 1699
Bibliography 1699

8.62
Viscometers—Application and Selection 1700

Introduction 1700
Theory of Viscous Behavior 1700
Stoke's Law 1700
Hagan–Poiseuille Law 1701
Kinematic Viscosity 1701
Intrinsic Viscosity 1701
Non-Newtonian Fluids 1701
Newtonian Fluids 1702
Pseudoplastics 1702
Dilatant Fluids 1702
Plastic Solids 1702
Thixotropic Materials 1702
Rheopectic Substances 1702
Apparent Viscosity Readings 1702
Conversion among Units of Viscosity 1702
Kinematic Viscosity 1703
Viscometer Selection and Application 1703
Selection 1703
Applications 1705
Finished Product Specification 1705
Routine Laboratory Testing 1705
Scientific Research Study 1705
In-Line Process Control 1705
Terminology 1705
Bibliography 1706

8.63
Viscometers—Laboratory 1708

Introduction 1709
Laboratory Viscometer Designs 1709
Bubble-Time Viscometers 1709
Accuracy and Limitations 1711
Capillary Viscometers 1711
Using the Ostwald Viscometer 1711
Accuracy and Limitations 1711
Calibration 1711
Automatic Capillary Viscometer 1713
Intrinsic Viscosity and Molecular Weight 1713
Mark–Houwink Equation 1714
Capillary-Extrusion Viscometer 1714
Design Variations 1715
Limitations 1715
Efflux-Cup Viscometers 1715
Saybolt Viscometer 1715
Ford Cups 1716
Zahn Cups 1716
Automatic Efflux Cup 1716
Falling-Ball Viscometers 1717
Manual Falling-Ball Unit 1717
Making the Measurement 1717
Calibration and Error Sources 1718
Automatic Falling-Ball Viscometer 1718
Falling-Needle Viscometer 1718
Rotational Viscometers 1718
Coaxial-Cylinder Viscometer 1718
Non-Newtonian Fluids 1719
Performance 1720
Cone-and-Plate Viscometer 1720
The Drive 1720
Oscillating Design 1721
Advantages and Precautions 1721
Oscillating Piston Viscometer 1721
Bibliography 1721

8.64
Viscometers—Industrial 1723

Introduction 1724
Capillary Viscometers 1724
Sensor for Newtonian Fluids 1724
Limitations 1726
Calibration 1726
Differential Pressure Type 1726
In-Line Design 1727
Dual-Capillary Design 1727
Pipe Section as Viscometer 1727
Backpressure Type 1727
Falling-Piston Viscometer 1728
Process Pressure-Operated Design 1728
Precautions 1729
Falling-Slug or Falling-Ball Viscometers 1729

© 2003 by Béla Lipták

Float Viscometers 1730
Precautions 1730
Single-Float Design 1730
Two-Float Design 1731
Concentric Design 1731
Oscillating Viscometers 1732
Oscillating Blade 1732
Oscillating Piston 1732
Torsional Oscillation Design 1734
Plastometers 1734
Plastic Behavior 1735
Cone-and-Plate Plastometer 1735
The Unit of Mooney 1735
Kneader Plastometer 1735
Capillary Plastometer 1736
Advantages 1736
Limitations 1737
Rotary Viscometers 1737
Rotary Spindle Design 1737
Installation 1737
Performance 1738
Magnetically Coupled Viscometer 1738
Gyrating-Element Viscometer 1738
Agitator Power 1739
Double-Cylinder Viscometer 1739
Vibrating-Reed Viscometer 1739
Performance 1740
Installation and Calibration 1741
Coriolis Mass Flow Meter 1741
Measuring Tube Torsional Movement 1741
Conclusions 1742
Bibliography 1742

8.65
Water Quality Monitoring 1744

Introduction 1744
Categories of Monitors 1744
Monitoring for General Use 1744
Regulatory Compliance Monitoring 1745
Industrial Monitoring 1745
Monitoring System Components 1745
Sampling Systems 1745
Duckbill Samplers 1745
Sample Transport 1746
Sensors and Analyzers 1747
Water Quality Parameters 1747
Ion-Selective Electrodes 1747
Conductivity 1749
pH Measurement 1749
Oxidation-Reduction Potential 1749
Oxygen Demand Detectors 1749
Dissolved Oxygen Sensors 1750
Total Organic Carbon and Total Carbon Analyzers 1750
Turbidity Meters 1750
Nephelometers 1750
Wet Chemistry and Autotitration 1750
Volatile Organics 1751
VOC Compounds of Interest 1751
Chromatographs 1752
Sample Obtained by Sparging 1752
Temperature and Environmental Variables 1752
Unattended Monitoring Stations 1753
References 1753
Bibliography 1753

8.66
Wet Chemistry and Autotitrator Analyzers 1755

Introduction 1755
Automatic Titration 1755
Types of Reactions and End-Point Detectors 1755
Continuous and Batch Designs 1756
Volumetric Analyzers 1756
High-Precision Volumetric Analyzer 1756
Operating Sequence 1756
Multiple End Points 1757
Simple Volumetric Analyzer 1757
Applications of Volumetric Analyzers 1758
Colormetric Analyzers 1758
High-Precision Colorimetric Analyzers 1759
Use of Gas Bubbles 1759
Split-Beam Colorimeter 1759
Calibration 1759
Simple Colorimetric Analyzers 1760
Calibration 1760
On/Off Batch Colorimeters 1760
Applications of Colorimetric Analyzers 1761
Flow Injection Analysis 1761
Laboratory FIA 1761
Industrial FIA 1762
Application Example 1 1762
Application Example 2 1762
Calibration 1763
References 1763
Bibliography 1763

© 2003 by Béla Lipták

8.1 Analyzer Application and Selection

B. G. LIPTÁK (1972, 1982, 1995) **A. H. ULLMAN** (2003) (Sidebar by Georg Erk)

INTRODUCTION

Modern process control requires current information on the state (composition, temperature, pressure, flow rate, etc.) of the material being produced. Modern distributed control systems linked to various control elements (valves, pumps, etc.) require data much more often than the manual control systems of years gone by. While grab samples taken to a modern laboratory will be the gold standard for quality control purposes, the effort and time it takes to get a sample, transport it to the lab, and wait for the result can add significantly to the costs of the process in process output, energy, etc. For many industries, the solution is to move the analysis directly to the process.

This need for more and better analyzers does not mean that their application is, or ever will be, a simple, routine task. For an analyzer system to fulfill its expectations, careful planning and evaluation must precede its purchase, and the users must realize that if an expensive analyzer is worth purchasing, it must also be worth calibrating and maintaining. The operator's acceptance, which depends largely on training and familiarization, is also crucial. New self-diagnosing and self-calibrating analyzers are a major contribution to improved operator acceptance, but people issues are still more important and should not be discounted.

In this section, a process for the selection of an analyzer is presented. The many issues that must be considered are covered, as is an overview of kinds of analyzers. The latter material should be viewed only as introductory. Detailed discussion of the different instruments is covered elsewhere in this volume and in the references.

The most important aspect of an analyzer application is a clear understanding of why the analyzer is needed, what information is needed, and what will be done with the information. Put another way, the analyzer problem must be clearly defined and understood. Too many analyzer applications have failed because the needed measurement was not the one installed in the process.

In general, the instrument engineer (analyzer engineer, process analytical chemist, etc.) is asked by a process control engineer to install an analyzer in a process. It is the analyzer engineer's duty to his company to push back and insure that the application is needed and clearly understood. Merely doing what is asked, in many cases, will lead to unnecessary or even failed installations.

The Selection Process

The process to follow in selecting the appropriate analyzer for an application involves eight steps:

1. Problem definition
2. Information gathering (to understand the problem fully)
3. Analyzer selection (making sure to consider and balance these criteria)
   Specificity
   Accuracy and precision
   Calibration
   Analysis frequency
   Kind of analyzer
4. Sampling
5. Analyzer location
6. Handling of the data
7. Maintenance issues
8. Total cost: hardware, installation, maintenance, etc.

It is not uncommon to cycle back from one step to another, as more information is needed to assure that the proper decisions are made. Installing the wrong kind of analyzer or putting it in the wrong place will not solve the problem, and instead of saving money or improving quality, money and effort will be wasted.

PROBLEM DEFINITION

Defining the problem begins with understanding how the measurement will be used. Is it for closed-loop process control or for information purposes? Is the measurement really needed "on-line," or could 80% of the benefits be obtained for 20% of the cost and effort by making the measurement "at-line" in the control room? What is the benefit of the measurement? How will the cost be justified? Is this to reduce staffing by moving the measurement from the lab to the pipe? Is it a yield-improvement project? Answers to these questions begin to clarify the needed timescale for the measurement. In addition, it is important to understand the process to be monitored. What is the response time of the process? Obviously, if the process takes 60 min to respond to a temperature change (e.g., distillation column), analyzer requirements are quite different from those of a process that responds in 6 sec. These issues are important and referred to throughout this chapter.

© 2003 by Béla Lipták

Before continuing our discussion of problem definition, it is helpful to define some commonly used terms. In analytical chemistry, we usually define measurements as laboratory, at-line, on-line, and in-line. In addition, measurements can be invasive or noninvasive. Process analytical chemistry encompasses all of these, except laboratory measurements.

An *at-line* measurement is generally a manual measurement, instrumental or chemical, performed near the process, generally in or adjoining the control room. The method may be identical to the laboratory method, but normally it is simpler and faster. The at-line approach is ideal when the resulting information is used to control slow response processes, or for quality control, or when true real-time measurements are prohibitively expensive, compared to the benefit. An example of an at-line measurement might be a caliper measurement of a paper product or a multiphase titration of a surfactant. In both cases, production samples are manually taken to the measurement station and tested. A typical frequency for an at-line measurement might be hourly.

On-line measurements are those installed on the process such that a sample or slipstream is brought to the measurement device, frequently with sample conditioning. In general, this method is used when data are needed very frequently and the measurement approach is not conducive to in-line use. The slipstream approach is needed when the measurement instrument requires sample conditioning, such as filtration. This will be discussed in more detail later. Process gas chromatographs are examples of instruments that normally use the on-line method and require sample conditioning to allow proper sampling of the small volumes needed for injection. (Of course, chromatographs do not normally provide rapid or continuous data output.)

In-line measurements are those in which a probe is inserted directly into the process. No sample conditioning is required. Common examples include pH and other electrode measurements. In a gray zone between the on-line and in-line categories, we find approaches in which the instrument is able to look into the process through a window (for example, a spectroscopic measurement) or directly on a moving web or conveyor belt. These are real-time approaches, but not on a slipstream and not really in-line either.

An *invasive* measurement is one that in some way penetrates or changes the process. Any in-line approach would be considered invasive, as would an on-line approach that modified the process flow with a slipstream. A near-infrared (NIR) photometer positioned above a web would be *noninvasive* since it does not enter or change the process or material. Similarly, a clamp-on ultrasonic flow or density meter is noninvasive.

When an adequate discussion of the measurement need has occurred, we can assume that the problem has been defined sufficiently, at least in terms of the kind of process measurement needed and how it will be used. It may be necessary to return to this subject and refine the problem definition further, based on additional information that will be gathered in the next steps.

INFORMATION GATHERING

Reasons for installing process analyzers include the improvement of safety, as well as of product quality; reduction of by-products, decrease in analysis time, tightening of specifications, and monitoring of contaminants, toxicants, or pollutants.

Additional requirements and characteristics of the measurement must be understood, including the needed frequency of analysis, sample availability, cost, and safety considerations.

Many analyzer experts find filling out a form to be helpful in gathering data on needs and desires (Table 8.1a). In selecting an analysis system, one must ask whether the need for the measurement justifies the cost. If the answer is yes, the study progresses until several possible types of analyzers are identified, at which time the question of cost is again raised, and some of the more expansive analyzers may be eliminated from further consideration. After the complete system has been defined, the estimated costs can be compared with the expected benefits and a decision reached.

With the basic problem defined, the process analytical chemist must now understand the measurement approach to be selected. This requires an understanding of the current approach, if any, including whether such a measurement is made in the plant laboratory. Frequently this information gathering step involves discussions with research and development analytical chemists, plant quality control laboratory personnel, and library research. In general, for any needed measurement, there will be several different possible approaches (methods) that could be taken. While gathering information, the process analytical chemist or instrument engineer should be open-minded to the methods, while carefully evaluating each one in light of the specific problem at hand. If the results of the measurement will be compared to the laboratory's results, it becomes crucial to understand any differences between the methods. Where possible, similar methods should be used. However, lab methods are not typically suitable to the process, so other approaches will probably be needed. The critical question to be answered during this information gathering phase is, "What is the measurement handle I can employ for the process measurement?" In other words, "What attribute of the analyte would be easiest to 'grab' (measure) in the process environment?" For example, if the project request is for an oxygen measurement, the engineer will have learned that it is gaseous oxygen, not dissolved oxygen, that is needed, and must now determine how to make the measurement, keeping in mind the process conditions. There are several common oxygen measurement approaches, each of which uses a different "handle" or attribute of the oxygen molecule. Depending on the process conditions, other components of the matrix, etc., the chemist could select a paramagnetic oxygen analyzer, which makes use of the fact that elemental oxygen is one of the few gases attracted to a magnet, or an electrochemical cell device, which makes use of oxygen's electroactivity. After the appropriate candidate process method has been selected, the chemist must address these issues: How will the method be calibrated? Will it be compared to the lab results? Does it

© 2003 by Béla Lipták

TABLE 8.1a
Sample Analyzer Specification Form

Project: ..... Date: .....

Specification no.:..... Code:.....

Information compiled by:.....

A. GENERAL INFORMATION:

1. Plant:..... 2. Unit: .....

3. Process: .....

B. CONDITIONS AT PLANNED ANALYZER LOCATION:

1. Ambient temperature range:..... to ..... Normal .....

☐°C ☐°F

2. Protected from weather: Yes ☐ ☐ No

3. Unusual ambient conditions .....

(Corrosive or explosive atmosphere, excessive moisture, dust, etc.)

4. Power available: ..... V ..... Hz

(a) Voltage variation: ..... to V

(b) Frequency variation: ..... to .....Hz

(c) Grounding facilities available: ☐ Yes ☐ No

5. Lighting level: *Good* *Average* *Poor*

(a) Front of instrument ....

(b) Back of instrument ....

(c) Direct sunlight will strike instrument: ☐ Yes ☐ No

6. Steam lines near location: .....

7. Instrument air available:

(a) Pressure range: from ..... to ..... Normal ..... PSIA

(b) Temperature range: from ..... to ..... Normal .....☐°C ☐°F

(c) Contaminants: .....

(d) Size of header: ..... Volume: .....ft^3/min.

(Use separate page for each stream to be analyzed.)

C. SAMPLING INFORMATION:

1. Form of sample: Gas ☐ Liquid ☐ Other .....

2. Temperature range: from ..... to ..... Normal ..... °C °F

3. Pressure range: from ..... to ..... Normal ..... PSIA

4. Dew point: ..... °C At ..... PSIG

5. Quantity available: ..... per hour

6. Low-pressure return line available:

Yes ☐ No ☐ Back-pressure ..... PSIG

7. Specific gravity: .....

8. Contaminants in sample:

Oil ☐ Wax ☐ Solids ☐ Particle Size .....

(Include identity and concentration in list of components below.)

9. Corrosive nature: Acidic ☐ Basic ☐ Other .....

10. Other data (viscosity, unusual surges, etc.): .....

11. Materials of construction that may be used in contact with sample: .....

12. Distance from sample tap to analyzer location: ..... ft

© 2003 by Béla Lipták

TABLE 8.1a Continued
Sample Analyzer Specification Form

13. Size of tap at process line, if any: .....

14. Concentration ranges of all components (even if only traces) in stream: (Specify unit of measurement: % by volume, % by weight, or ppm for each component.)

Components to Be Analyzed				*Other Components*				
Maximum	*Minimum*	*Normal*	*Unit*	*Water (Liquid, Vapor)*	*Maximum*	*Minimum*	*Normal*	*Unit*

15. The above stream composition information is considered proprietary:
Yes ☐ No ☐

16. Method of lab analysis used to measure sample: .....

17. Desired response time of analyzer: ..... min ..... sec .....

18. Accuracy required: % of full-scale reading

D. INSTALLATION REQUIREMENTS:

1. Type of installation: Permanent ☐ Temporary ☐ Portable ☐

2. Type of mounting: None ☐ Rack ☐ Panel ☐

Other: .....

3. Electrical code: Class ..... Group ..... Division .....

4. Recorder or indicator required: .....

(a) To be supplied with analyzer: Yes ☐ No ☐

5. Location of recorder: At analyzer ☐ Distance from analyzer ..... ft

6. Recorder mounting: None ☐ Rack ☐ Panel ☐

7. Accessories:

(a) Alarms: High ☐ Low ☐ (b) Controls: .....

(c) Others: .....

8. Date required: .....

9. Sketch of system indicating sample points and distances to analyzer:

measure the same thing(s)? Of course, the most important question is, "Will this measurement method provide the information needed by the process engineer or customer?"

Frequently, while gathering information, one must return to problem definition and seek clarification. This is an iterative process. It is not uncommon for the problem definition to change as you learn more about the possible measurement approaches and share these learnings with your customer. Finally, you feel you have enough clarity regarding the problem and can move forward to the technique or analyzer selection step in the process.

TECHNIQUE OR ANALYZER SELECTION

The most important factors that must be weighed by the instrument engineer are discussed in the remainder of this chapter and in the chapters that follow. Unfortunately, no single analyzer combines all the desirable features of providing on-stream, specific, continuous, unattended high-sensitivity readings without drift, noise, or need for a sampling system. Therefore, the selection is always a compromise, which is likely to give satisfactory results only if it is preceded by careful evaluation.

© 2003 by Béla Lipták

If the problem has been defined as one requiring the measurement of one material in the presence of another, it is necessary first to look for the handle or unique property of the material to be measured. Usually, a first step in determining the suitable methods of analysis is to investigate laboratory methods used to determine the desired property. As previously noted, a meeting with laboratory personnel is a good first step. Industry methods are another good starting point. For example, the American Society for Testing Materials (ASTM) has established certain test methods for the determination of various properties and materials. Their methods are widely available in book form and on the web.[1] Other organizations such as the American Oil Chemists Society (AOCS) and the Technical Association of the Pulp and Paper Industry (TAPPI) have also published compendia of analytical methods.[2,3] Suppliers of the material to be analyzed are possible sources of information for methods of analysis, as are suppliers of on-line analyzers.

Once prospective methods of analysis have been selected, the search for appropriate hardware begins. Ordinarily, details of the desired measurement are given to the potential analyzer suppliers, and estimates of performance are obtained. The analysis system can often be purchased on a guaranteed-performance basis. For proprietary installations, the user himself must determine how the general analyzer specifications apply for the particular application, and since the user is buying hardware only, the supplier will guarantee only the quality of materials and workmanship. Alternatively, once a single supplier has been selected, a confidentiality agreement can be signed allowing information sharing by both parties—a true partnership to assure a successful installation.

When comparing different analysis approaches, the following criteria are critical.

Specificity (Selectivity)

Specificity is the characteristic of responding only to the property or component of interest. The specificity of the analyzer will not exceed that of the analysis. Specificity is often a function of the range to be measured, the sample background, and the process conditions (solid, liquid, or gas; pressure and temperature). The more selective a measurement is, the less we need be concerned with interferences from other constituents of the sample matrix. Obtaining a high degree of selectivity frequently means compromising other analytical attributes. For example, a gas chromatographic separation with baseline resolution of the analyte of interest may require a longer analysis time than is desired or allowable.

Accuracy and Precision

Frequently, absolute accuracy of a process measurement cannot be established owing to the lack of a suitable calibration standard or the inability to draw an unchanged sample from the process and analyze it by an "official" laboratory method. For this reason, other terms, such as repeatability, take on added importance. Often, the terms do not have industry-wide significance, so the definition should be agreed upon with each supplier. (Note: With proper calibration, an analyzer will be "accurate.")

In general, in process measurement, precision or repeatability is more important than accuracy. Since the measurement is being made continuously or repeatedly, we are much more interested in changes in a value than whether that value is "absolutely correct" or accurate. Changes in the process are what we are trying to measure and understand (and control).

For the purpose of this discussion, *precision* is defined as the ability of an analyzer to produce the same output each time the sample contains the same quantity of component or property being measured. The terms *stability*, *reliability*, and *reproducibility* are sometimes used synonymously with *repeatability*. However, *reliability* is also used to describe the instrument's "up time" and should not be used as a synonym for precision. Lack of repeatability may be caused by the analyzer, the sampling system, or the effects of temperature, power supply, composition, pressure, and flow rate. Poor precision or low repeatability can come in two forms: short term and long term. Short term may mean the measurement system has lots of randomness (noise). Such random noise degrades the utility of any given reading, but may be tolerable since many data points are collected. Long-term drift can be a more significant problem requiring frequent instrument recalibration or adjustment. Repeatability and inaccuracy are normally expressed either as a percentage of the full measurement range or as a percentage of the actual reading.

When discussing specifications for an analyzer, especially with prospective vendors, be very careful to define all technical terms and understand exactly what the literature or the sales engineer means by terms such as accuracy, drift, precision, etc. If there is any doubt, ask for a clarifying example with actual numbers, such as, "The refractometer is stable to ±1% of the actual reading over 14 days, without any adjustments. That is, it will read 1.102 ± 0.1 for 2 weeks, if the temperature changes no more than ±5°C." Sales literature is notorious for specifications that are unclear and frequently misleading.

Calibration

The ability to calibrate an analyzer properly usually depends on the availability of a reliable reference sample, or the ability to perform reliable laboratory analysis on the actual sample that is entering the analyzer. Never lose sight of these inherent difficulties (challenges) in calibration: 1) Samples can change after removal from the process and hence are different when they reach the lab. 2) Highly variable process streams, in which the lag time between the process measurement point and the sampling valve cause the sample drawn from the stream and the sample measured in the process to be different. (In some cases, the sample itself may be inhomogeneous, which further complicates comparison measurements.) 3) The two measurement methods may not be measuring the identical analyte. For example, a near-infrared moisture analyzer may

© 2003 by Béla Lipták

be calibrated against a loss-on-drying lab method, but these are not identical, and there may be a bias between them caused by other volatile constituents of the sample.

Interferences with the analysis can be caused by physical or chemical effects that cause a deviation in the analyzer output. If the effect of the interfering substance remains constant, a compensation factor can usually be applied in the calibration procedure. During checkout of the installed system, one should verify the effect of interference by calibrating the analyzer for each suspected substance.

When interferences cannot be predetermined, it may be both necessary and practical to send known samples to prospective suppliers for evaluation. In any case, known and suspected interferences and their concentrations should be made known to prospective suppliers when requesting quotations.

Both the method of calibration and the accuracy of the calibration procedure must be established before one purchases a process analyzer.

Analysis Frequency

As discussed in the Problem Definition section, one should first determine whether continuous analysis, automatic-repetitive batch sampling, or an occasional spot check is required. The information from the analyzer and the rate of the dynamic changes in the sample are the main factors to be considered.

The need for process control suggests either a continuous analyzer or an analyzer with a continuous output signal, because a continuous analyzer provides a better chance for the system to reach and maintain equilibrium with the sample. Also, the mechanical design of a continuous analyzer ordinarily is less complicated than that of a discontinuous system. However, the discontinuous analyzer may be more attractive if automatic zero checks are frequently needed, if reagents are blended with the sample, or if the sample is corrosive. Some analyzers, for example, chromatographs, are inherently discontinuous.

The rate at which the measured variable changes in the process is an important factor in determining the frequency of discontinuous analyses. If the sample has to be withdrawn and transported to the analyzer, the time lag factor must also be considered. If several different samples are to share the analyzer (e.g., stream switching), additional time allowances are required.

Kinds of Analyzers

Analytical techniques suitable for process measurement may be organized into several arbitrary categories. No one approach is inherently superior to another, although for a specific project, the constraints covered previously will narrow the choice.

Separation Techniques

Separation techniques literally involve the separation of different components in the sample with appropriate detection. Gas chromatography, which dates to the 1950s, is probably the most widely used technique in process analysis, with the possible exception of pH.

In all chromatographic techniques, a small portion of the sample stream is injected into a flowing carrier fluid that passes through a column in which it contacts a separation medium prior to reaching a detector. In gas chromatography, the sample is vaporized, if it is a liquid, and carried with helium or nitrogen (most commonly) through the column. The column may be a tube packed with adsorbent media or a thin capillary column coated with an appropriate phase to cause a separation. If the sample was a gas to begin with, it is carried through the column without the need for vaporization. Depending on the analytes to be separated, one chooses the appropriate length of column and coating or packing material. Many different separation materials are available. Similarly, many different gas chromatography detectors exist to provide specificity or broad detectabilty. For fixed gases, the thermal conductivity detector (TCD) is mandatory; for organic compounds, either the TCD or the flame ionization detector (FID) is acceptable, but the FID is more sensitive. Added sensitivity (lower detection limits) comes at a price: the FID needs additional gases and extra safety precautions. Later chapters will address these subjects in more detail. In liquid chromatography, the sample is injected into a flowing stream of solvent (mobile phase), separated, and detected. Common detectors include the refractive index (RI) detector, which monitors the eluting mobile phase for RI changes; absorbance detectors, which monitor the spectral absorbance of the mobile phase at one or more wavelength, commonly in the ultraviolet (UV) or visible (Vis) areas of the spectrum; and the electrochemical detector, which monitors an electrochemical property such as conductance of the mobile phase.

Other chromatographic techniques that are available for process measurement include ion chromatography, which can measure either the anions or cations of a stream; gel permeation chromatography, which measures the molecular weight distribution, typically of polymer samples; and supercritical fluid chromatography, which operates in the pressure and temperature regime where a carrier fluid, such as carbon dioxide, is neither liquid nor vapor.

The disadvantages of the chromatographic techniques are the length of time many of the separations take, the fact that these are not continuous techniques (samples are injected only after the previous run is complete and the system has stabilized), aging of the columns, consumption of gases or solvents, and maintenance of the frequently complex and costly sampling systems. In fact, the cost of the chromatograph itself can be less than half of the total installation cost and, if the expense of maintenance is also included, the fraction of the instrument's cost is reduced even further. Some reports indicate that for every successful chromatograph installation in the chemical industry, one has failed and been abandoned. For this reason, some engineers favor simple inexpensive chromatographs, monitoring one component in a single sample to increase reliability. Proponents maintain that an overburdened chromatograph is more a liability than an asset, and that even

© 2003 by Béla Lipták

TABLE 8.1b
Absorption/Emission of Electromagnetic Energy Useful for Measurements

Type of Radiation	*Wavelength Range*	*Characteristic Process Probed*
Gamma-rays	$<10^{-12}$ m	Nuclear transitions
X-rays	1 nm–1 pm	Inner-shell electron transitions in atoms
UV	400 nm–1 nm	n, π (valence) electron transitions in molecules
Vis	750 nm–400 nm	n, π (valence) electron transitions in molecules
NIR	2.5 μm–750 nm	Molecular vibrations
IR	25 μm–2.5 μm	Molecular vibrations
Microwaves	1 mm–25 μm	Rotations in molecules
Radio waves	>1 mm	Rotations in molecules, electron spin flips[a]

[a]NMR uses a magnetic field to split the energy levels and the Rf energy to probe the spin state.

when it is operating, the volume of information generated is more likely to swamp than to assist the operator. Therefore, their target is to achieve a degree of standardization and simplicity similar to that found in flow or temperature detectors. It is reported that these simple chromatographs can accommodate the majority of present applications.

New developments in the simplification of sampling systems may reduce their cost and complexity while increasing reliability. Recent developments in the field of sampling systems using a small, industry standard platform of modular components show much potential.[4–8] Recent research in the use of chemometrics to extract information from poorly resolved peaks may provide advantages in analysis time by allowing faster run times. Parallel columns of different separation power combined with chemometrics will provide additional benefits. Chemometrics can help address the issue of swamping the operator with information.

Other Separation Techniques

Developments in nonchromatographic separation techniques, such as capillary electrophoresis, in which an applied electric potential is used to drive the separation of charged species, are occurring rapidly. The combination or merger of chromatography and flow injection analysis (FIA) is also on the horizon.

Spectroscopic or Radiant Energy Techniques

This family of sensors uses the interaction of electromagnetic radiation with matter. Most commonly, the technique operates on either absorption or reflection principles, but fluorescence and scattering are also used.

If radiation at different wavelengths is passed through a process material, the amount of absorption may be an indicator of sample identity or composition. The output of such an analyzer is related to the absorption of the light in a linear way, as shown in Beer's law (more correctly, the Lambert–Beer law) of radiation absorption. (Transmission is logarithmic with respect to light transmission, but linear with absorption and concentration.)

$$A = abc = \log \frac{I_0}{I} \qquad \textbf{8.1(1)}$$

where

A = absorbance
a = molar absorption or extinction coefficient (a constant for any given compound and wavelength)
b = sample path length
c = absorber (sample) concentration
I_0 = incident radiation
I = radiation leaving sample

The region of the spectrum used for the measurement varies with the kind of compound and information desired (Table 8.1b). In addition, the instrument itself will be quite different in specific components since the properties of the light vary. Instruments to make these measurements can vary from single-wavelength photometers to grating instruments to multiplex designs, depending on the spectral region and the needs of the measurement.

Ultraviolet and Visible

These regions of the spectrum are similar and are generally grouped together. In fact, most laboratory instruments for this region include both. The energy of this region corresponds to electronic transitions in compounds. In the UV, compounds with double bonds, such as those in Table 8.1c, are commonly measured. Other functional groups with π electrons are also excellent absorbers (Table 8.1d). Vis absorbers are compounds that are colored to the human eye. Obviously, dyes, inks, etc. are readily measured in the visible portion of the spectrum. One major thing to watch out for is that compounds that absorb in this region may be such strong absorbers that a short path length is needed to get a good response, and only very low concentrations can be measured. Reducing the path length may help, but too small a path length in a typical process stream will act as a filter and cause the measurement to fail.

© 2003 by Béla Lipták

TABLE 8.1c
Partial List of UV-Absorbing Compounds

Acetic acid	Formic acid
Acetone	Hydrogen peroxide
Ammonia	Hydrogen sulfide
Benzene	Iodine
Bromine	Isoprene
Butadiene (1,3)	Mercury
Carbon disulfide	Naphthalene
Carbon tetrachloride	Nitric acid
Chlorine	Ozone
Chlorobenzene	Perchloroethane
Crotonaldehyde	Phenol
Cumene	Phosgene
Cyclohexane	Styrene
Cyclohexanol	Sulfur
Cyclohexanone	Sulfur dioxide
1,3-Cyclopentadiene	Sulfuric acid
Ethylbenzene	Toluene
Fluorine	Trichlorobenzene
Formaldehyde	Xylene (*ortho*, *meta*, and *para*)

Fluorescence

When radiation of one wavelength is absorbed by a molecule with the appropriate molecular structure, it can be remitted at a higher wavelength (lower energy). This process, called fluorescence, is an extremely useful measurement technique, provided that the analyte has the appropriate structure. Molecules with many double bonds, especially conjugated double bonds, will fluoresce. Many biomolecules, including some vitamins, proteins, cofactors, and the like, fluoresce, allowing the technique to be used in fermentation and other bioprocessing. Crude oil also contains fluorescent molecules; low levels of oil on water are frequently detected using fluorescence. Table 8.1e provides a list of some fluorescent compounds along with their excitation and fluorescence (emission) wavelengths maxima.

Infrared and Near-Infrared

Infrared (IR) instruments were one of the first analyzers to be moved from the laboratory to the pipeline, and the technology is available for use with gas, liquid, or solid samples. In the absorption mode of operation on liquid samples, the path length has to be very short, though not as short as in the UV. Noncontacting backscatter designs readily measure moisture in solids (e.g., conveyor belts of flour) or composition with fiber-optic probes (FOPs) in liquids. The probe version of the IR analyzer eliminates the need for a sampling system and can be used in both liquid and gas phase processes. NIR is widely used for moisture measurement. Probably every paper machine in the world has an IR or NIR analyzer to

TABLE 8.1d
Absorption Bands of Some UV-Vis Absorbing Chromophores (Functional Groups)

Chromophore	*Structure*	*Wavelength Maximum (nm)*	*Molar Absorptivity [l/(mol·cm)]*
Aldehyde	CHO	280–300	11–18
Amine	NH_2	195	2800
Bromide	Br	208	300
Carbonyl	C═O	195, 270–285	1000, 18–30
Disulfide	S—S	194, 255	5500, 400
Ester	COOR	205	50
Ether	O	185	1000
Nitrite	ONO	220–230	1000–2000
Oxime	NOH	190	5000
Thioether	S	194, 215	4600, 1600
Carbon–carbon double bonds	C═C	190	8000
	$(C═C)_2$	210–230	21,000
	$(C═C)_3$	260	35,000
	$(C═C)_4$	300	52,000
Carbonyl with C═C	C═C—C═O	210–250	10,000–20,000
Benzene	Aromatic ring	184, 204, 255	46,700, 6900, 170
Diphenyl	Linked aromatic rings	246	20,000
Anthracene	Fused aromatic rings	252	199,000

© 2003 by Béla Lipták

TABLE 8.1e
Partial List of Some Fluorescent Compounds and Their Excitation and Fluorescence Wavelength Maxima

Compound	*Excitation Maximum (nm)*	*Fluorescence (Emission) Maximum (nm)*	*Compound*	*Excitation Maximum (nm)*	*Fluorescence (Emission) Maximum (nm)*
Adenine	280	375	Proteins	280	313, 350
Adenosine	285	395	*p*-Terphenyl	284	338
Adrenaline	285	325	Pyrene	330	382
Anilines	280, 290	344, 360	Pyrene, 4-methyl	338	386
Anthracene	420	430	Quinine	250, 350	450
Adenosine triphosphate (ATP)	285	395	Salicylic acid	310	435
Dibenzo[*a*,*e*]pyrene	370	400	Terramycin	390	520
Estradiol	285	330	Tetracycline	390	515
Folic acid	365	450	Thymol	265	300
Indole	280	355	Tryptophan	285	365
LSD	325	465	Vitamin A (carotene)	325	470
Neosynephrin	270	305	Vitamin B_{12} (cobalamine)	275	305
Pentabarbital	265	440	Vitamin B_2 (riboflavin)	270, 370, 445	520
Pentothal	315	530	Vitamin B_6 (pyridoxine)	340	400
Phenanthrene	252	362	Vitamin E (tocopherol)	285	330
Procaine	275	345			

Note: Excitation and fluorescence bands are broad and maxima may shift with pH or solvents.

TABLE 8.1f
Absorption Bands of Some Raman and Infrared-Absorbing Chromophores

Chromophore (Functional Group)	*Region (cm^{-1})*	*Intensity*	
		Raman	*Infrared*
CC aliphatic chains	250–400	Strong	Weak
S—S	430–550	Strong	Weak
Si—O—Si	450–550	Strong	Weak
C—Cl	550–800	Strong	Strong
C—O—C	800–970	Medium	Weak
O—O	845–900	Strong	Weak
C—O—C asymmetric	1060–1150	Weak	Strong
CH_3	1380	Medium	Strong
CH_2, CH_3 asymmetric	1400–1470	Medium	Medium
N═N aromatic	1410–1440	Medium	—
C═C	1500–1900	Strong	Weak
C═N	1610–1680	Strong	Medium
H_2O	1640	Weak	Strong
C═O	1680–1820	Medium	Strong
C≡C	2100–2250	Strong	Weak
C≡N	2220–2255	Medium	Strong
C—H	2800–3000	Strong	Strong
O—H	3100–3650	Weak	Strong

Note: Intensities and wave number ranges are approximate and may vary with exact compounds.

measure and control drying. NIR instruments can be filter photometers or spectral instruments using gratings, interferometers, or acousto-optic tunable filters (AOTFs) to select the wavelengths needed for the measurement. Table 8.1f and Figure 8.1g give some absorption wavelengths for various organic functional groups in the IR and NIR regions.

Raman

In recent years, the Raman spectrometer has moved from the laboratory to the process floor. This has been driven by the combination of improved lasers, fiber optics, and compact spectrometer designs. Raman spectroscopy is complementary to IR and provides similar functional group information. Raman spectroscopy obtains its information from the scattering of light from molecules. It is amenable to direct, noninvasive sampling of solids and liquids. Water and glass are weak Raman scatters, providing the opportunity to investigate samples in aqueous media and through glass site windows, or a glass container, or via FOPs. Reports of Raman being used to monitor polymerization reactions and distillation processes are among the growing number of published applications. Use of NIR laser diodes has reduced the problem of background fluorescence. Table 8.1f compares some molecular absorption bands in the IR and Raman.

Microwave and Radio Frequency

Microwave and radio frequency (Rf) analyzers operate in both the absorption and reflection modes. Their most common

© 2003 by Béla Lipták

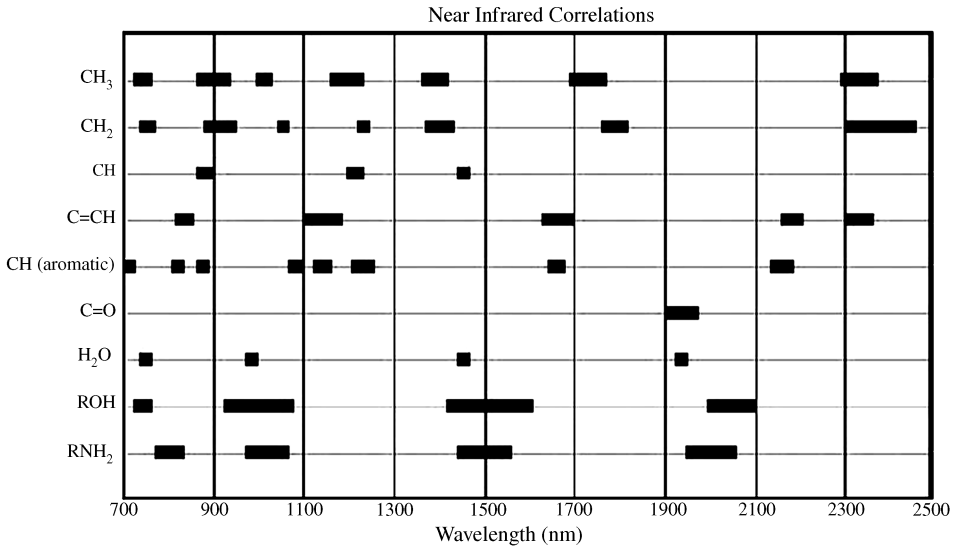

FIG. 8.1g
Absorption bands of some NIR-absorbing chromophores.

application is in the measurement of moisture in solids—without requiring physical contact with the sample. In these wavelength regions, dielectric properties are probed by the radiation; hence water, with its high dielectric constant (~78), compared to many common organic compounds (<5), is readily determined (e.g., moisture in wood). The technique is also used for binary solutions. Compared to the previously described spectral regions, this is a relative newcomer to process measurement. Tables of dielectric constants may be found in References 9 and 10.

Refractometry

The RI is a unique property of a chemical compound, based on the fact that light travels at different speeds in different media, and as such can be used for composition determination in binary systems and for various nonspecific concentration measurements, e.g., dissolved solids, black liquor, and Brix (sugar). Snell's law expresses the relationship between RI, the angle of incidence (α), and the angle of refraction (β) as light of a given wavelength passes through the interface between two materials.

$$\text{RI} = \frac{\sin\alpha}{\sin\beta} \qquad \textbf{8.1(2)}$$

Most refractometers use visible light, but at least one uses a diode source that emits just beyond the red. Differential refractometers utilize this relationship by keeping α constant; therefore, a measurement of β expresses RI. At a critical value of α, the light is totally reflected; the measurement of this angle can also be related to RI as follows:

$$\alpha_{\text{critical}} = \text{arc sin}\left(\frac{\text{variable sample RI}}{\text{fixed prism RI}}\right) \qquad \textbf{8.1(3)}$$

Although less sensitive, this latter technique (critical angle refractometry) requires no sampling system and, therefore, is preferred for on-stream applications. In fact, it has practically replaced the differential refractometer in all but the most demanding applications. It should be noted, though, that the critical angle refractometer only measures the RI of that portion of the sample that is in direct contact with the crystal. If even a thin coating develops on the surface, the readings will be useless. A variety of cleaning systems may be used if this is a problem. Turbulent flow has proven useful in minimizing fouling. (For a listing of refractive indexes, see Table 8.1h.)

Turbidity and Particle Size

As with refractometers, turbidity sensors also work with light, but make use of light scattering to measure the suspended solids in the liquid. Depending on the concentration of the particles, turbidity can be measured at 90°, 180°, or complete backscatter. (Technically, turbidity is the term applied to the straight-through approach, and nephelometry is used for the scattering measurement.) In addition to scattered light, some light may be absorbed by the liquid. Since there is a particle size dependence to light scatter, instruments are also available that use scattering to measure particle size distribution. Turbidity instruments are quite commonly used to monitor filtering systems, centrifuges, etc., for breakthrough, whereas the more expensive particle size instruments find use monitoring crystallization and polymerization processes.

Nuclear Techniques

A variety of techniques utilizing x-rays and other radiation sources are used in process measurements. X-ray fluorescence (XRF) is widely used to determine metal concentrations in slurries and to measure silicon coatings on paper. (XRF works

© 2003 by Béla Lipták

TABLE 8.1h
Refractive Index Table

Compound	*RI*	*Compound*	*RI*
Acetic acid	1.3718	Formic acid	1.3714
Acetone	1.3588	Glycerol	1.4729
Acrylic acid	1.4224	Glycol	1.4318
Amyl acetate	1.4012	Heptane	1.3876
Benzene	1.5011	Hexane	1.3749
Butyl acetate	1.3951	Hexanol	1.4135
Butyl alcohol	1.3993	Hydrazine	1.470
Butylene	1.3962	Hydrogen chloride	1.256
Carbon disulfide	1.6295	Lead tetraethyl	1.5198
Carbon tetrachloride	1.4631	Menthol	1.458
Chlorobenzene	1.5248	Methyl alcohol	1.3288
Chloroform	1.4464	Methyl-ethyl ketone	1.3807
Cycloheptane	1.4440	Nitric acid	1.397
Cyclohexane	1.4262	Nonane	1.4055
Cyclohexanone	1.4503	Octane	1.3975
Cyclopentane	1.4065	Pentane	1.3575
Decane	1.41203	Perchloroethylene	1.5053
Di-ethyl benzene	1.4955	Phenol	1.5425
Di-ethyl ether	1.3497	Propanol(iso)	1.3776
Di-methyl benzene	1.4972	Propanol(*n*)	1.3851
Ethyl acetate	1.3722	Styrene	1.5434
Ethyl alcohol	1.3624	Toluene	1.4969
Ethylbenzene	1.4952	Water	1.3330

Note: All data based on 68°F (20°C).

by exciting an inner-shell electron of an element, causing an x-ray to be emitted. The energy (wavelength) of the emitted x-ray is indicative of the element, and the number of x-rays is proportional to concentration. The excitation radiation can come from an x-ray tube or a radioactive source.)

The absorption or backscatter of neutron or gamma radiation can also be correlated to composition in some systems. Neutrons have been used to measure the moisture content of solids in processes in which hydrogen is present only in the free water and is not bonded to the other molecules (or is relatively constant in the nonwater part of the matrix). For example, the moisture of wood chips in pulping has been determined by this technique. Gamma rays, which are extremely energetic, are absorbed nonspecifically, and their attenuation can be used as a measure of density. Since gamma rays can penetrate metallic walls, they can give composition data for binary systems without contacting the process stream. These techniques are also used extensively as a noninvasive way to measure tank or pipe level, density within a pipe, and the like.

ELECTROCHEMICAL SENSORS

Several kinds of measurements make direct use of electricity in the measurement. These are potentiometric, wherein an electric potential is measured and the solution remains unchanged; conductive, in which a minute current is measured, but the system is essentially unchanged; and amperometric, in which a chemical reaction occurs during the course of the measurement.

The basic principle of their operation for a system in which a reactant, R, goes to a product, P, is the Nernst equation:

$$E = E^0 - \frac{RT}{nF} \ln \frac{C_P^0}{C_R^0} \qquad \textbf{8.1(4)}$$

where

- E = applied potential
- E^0 = standard potential for the system (the chemistry of the reaction being measured)
- R = the molar gas constant
- T = the absolute temperature (°K)
- n = the number of electrons involved in the reaction
- F = Faraday constant
- C_P^0 = the concentration of product at the electrode surface
- C_R^0 = the concentration of reactant at the electrode surface

Potentiometric

The family of analytical sensors that detect the electrical potential generated in response to the presence of dissolved, ionized solids in a solution include pH, oxidation–reduction potential (ORP), and ion-selective electrodes (ISEs) or probes. In potentiometric analysis, the potential difference between two electrodes (reference and measurement) is determined. As these two electrodes must be electrically connected, another potential, the junction potential, is also inherent to the measurement. (In fact, most of the problems of process pH measurement occur because of fouling of the junction.)

For these measurements, the Nernst equation can be rewritten to:

$$E_{cell} = K + \frac{RT}{z_i F} \ln \left(a_i + k_{ij} a_j^{\left(\frac{z_i}{z_j}\right)} \right) + E_{LJ} \qquad \textbf{8.1(5)}$$

where

- E_{cell} = the measured potential
- K = is a constant for the measurement system (electrode, etc.)
- R = the molar gas constant
- T = the absolute temperature (°K)
- F = Faraday constant
- a_i = the activity of the analyte ion, i
- a_j = the activity of an interfering ion, j
- k_{ij} = selectivity coefficient
- z_i and z_j = the charges of ions i and j, respectively
- E_{LJ} = the liquid junction potential

© 2003 by Béla Lipták

It can be further simplified in *dilute* solutions (where activity and concentration are approximately equal) to

$$E_{cell} = K + \frac{0.0592 \log c}{n} \qquad \textbf{8.1(6)}$$

where

c = the concentration of analyte
n = charge of the analyte ion
0.0592 = the combination of the RT/F at 25°C

ORP sensors are available in probe designs to detect the ratio of reducing agent to oxidizing agent—an important parameter in effluent treatment controls, for example.

ISEs are also based on the Nernst law. If total ionized solids (conductivity) are constant, a correlation can be drawn between the activity of a specific ion and its concentration in the process stream. The ideal reference electrode produces a constant potential that is independent of the composition of the solution. A perfect measuring electrode gives a 59-mV change in potential for each tenfold change in the *activity* of a monovalent ion. It is important to emphasize that it is the *activity* of free ions that the electrodes respond to and *not* the concentration. It is important to understand that according to the Nernst equation, concentration, c, can be determined by the measurement of activity (activity = γc, where γ is the activity coefficient of the ion) *only if* the other variables of the equation are *constant*. To achieve this involves scrupulous design; occasionally, it also requires sample preparation. Frequently, in real-world applications, calibration of the electrode in the matrix, over a limited analyte range, can be used to minimize concerns over activity–concentration discrepancies.

Unless the interferences to which ion-selective measurements are subject can be recognized and eliminated in the potential installations, misapplications are likely. The available ISEs are listed in Table 8.1i, where they are also grouped by the type of membrane utilized. Coating or material buildup on the membranes calls for the same degree of maintenance as required for pH electrodes.

pH sensors are ISEs, sensitive to the activity of hydrogen ions in the process stream, and as such, reflect the acidity or alkalinity of the sample. pH is one of the most commonly made measurements in industry. On the surface, it appears to be easy to measure pH, since all that is needed is the insertion of the probe into the process, but in practice, it is not so simple. Probes may become fouled on the sensing surface; most are made of glass and quite fragile; concentrated solutions, or ones that are not aqueous, stretch the definition of pH (which is for dilute aqueous solutions), and high purity water (e.g., boilers)

TABLE 8.1i
Ion-Selective Electrodes: Types and Applications

Ion	*Type of Electrode*	*Lower Detectable Limit (ppm)*	*Principal Interferences*
Bromide	Solid state	0.4	CN^-, I^-, S^-
Cadmium	Solid state	0.01	Ag^+, Hg^{++}, Cu^{++}, Fe^{++}, Pb^{++}
Calcium	Liquid–ion exchange	0.4	Zn^{++}, Fe^{++}, Pb^{++}, Cu^{++}, Ni^{++}, Sr^{++}, Mg^{++}, Ba^{++}
Chloride	Liquid–ion exchange	0.4	ClO_4^-, I^-, OH^-, NO_3^-, Br^-, OAc^-, HCO_3^-, F^-, SO_4^-
Chloride	Solid state	1.8	Br^-, CN^-, SCN^-, I^-, NH_3, S^-
Copper (II)	Solid state	0.006	Ag^+, Hg^{++}, Fe^{+++}
Cyanide	Solid state	0.3	S^-, I^-
Fluoride	Solid state	0.02	OH^-
Fluoroborate (boron)	Liquid–ion exchange	0.11	I^-, HCO_3^-, NO_2^-, NO_3^-, F^-, Br^-, OAc^-, OH^-, Cl^-, SO_4^-
Iodide	Solid state	0.007	S^-, CN^-, $S_2O_3^-$
Lead	Solid state	0.02	Ag^+, Hg^{++}, Cu^{++}, Cd^{++}, Fe^{++}
Nitrate	Liquid–ion exchange	0.6	ClO_4^-, I^-, ClO_3^-, S^-, Br^-, NO_2^-, CN^-, HCO_3^-
Perchlorate	Liquid–ion exchange	1.0	OH^-, I^-, NO_3^-, MnO_4^-, IO_4^-, Cr_2O^-
Potassium	Liquid–ion exchange	2.0	H^+, NH_4^+, Ag^+, Na^+, Li^+, Cs^+
Redox	Solid state	Varies	All redox systems
Silver	Solid state	0.01	Hg^{++}
Sodium	Solid state	0.02	Ag^+, H^+, Li^+, K^+
Sulfide	Solid state	0.003	
Thiocyanate	Solid state	0.6	I^-, $S_2O_3^-$, Br^-, CI^-, NH_3
Water hardness	Liquid–ion exchange	0.001	Zn^{++}, Fe^{++}, Cu^{++}, Ni^{++}, Ba^{++}, Sr^{++}

© 2003 by Béla Lipták

requires specially designed probes, if it is to work at all. Recent improvements in electronics have reduced drift, instability, and transmission distance limitations. Combination electrodes (measurement and reference), gel fill *solutions*, and the development of various electrode-cleaning devices, such as air and water jets, and mechanical and ultrasonic cleaners have reduced many of the problems. New nonglass electrodes based on ion-sensitive field effect transistors (ISFETs) have opened up new applications where glass has been problematic (e.g., food and beverage processes). Automation of the removal, cleaning, and reinsertion of pH probes is now available "off-the-shelf" for those applications that require nearly continuous pH measurement and cannot tolerate downtime for maintenance. Nevertheless, despite all this activity, pH remains a difficult measurement for which installation of standby spare sensors and scheduled periodic maintenance are likely to be necessary.

Conductive

Conductivity sensors measure a solution's ability to conduct electricity, which is a function of all dissolved ionized solids in the solution. Two basic kinds of conductance measurement instrument are available: direct contact and inductive. The direct device makes direct, electrical contact with the process solution with two (or sometimes four) electrodes and measures the flow of electricity from one electrode to the other. Any fouling of the probes, which affects electric contact, requires cleaning of the probes. The inductive type is less sensitive to fouling because it does not make electrical contact with the process fluid. Toroidal (donut shapes are common) probes use several electric coils to probe the electric properties of the fluid. The probe is coated with an inert material such as a fluorocarbon. Another design builds the inductive probe directly into a pipe spool piece. Inductive conductance probes are widely used to measure the concentration of strong acid and base solutions. Plots of conductivity vs. concentration of various electrolytes are used to determine if an application is suitable for these devices. Conductance data for various compounds are available in various chemical handbooks and an excellent compilation from a vendor.[9–11]

Amperometric

Amperometric, also known as galvanic and polarographic, cells induce a reaction in the sample by applying a high enough voltage. The resulting current is measured and is proportional to the concentration of the species reacting. The electrolyte and electrodes are separated from the process stream by a membrane, a feature that eliminates the need for a sample system and can perform well *if* the membrane is kept clean. (Of course, the analyte molecules must diffuse through the membrane into the electrolyte to the electrodes if there is to be a reaction and resulting signal.) In the world of process measurements, such instruments are commonly used to measure oxygen, including both dissolved oxygen in liquids and vapor phase oxygen in gas samples. Membrane-separated amperometric sensors are also used for other gases, such as CO, H_2S, and Cl_2. Sensors using this concept are also being developed for bioanalytes such as glucose, where a specific enzyme is part of the measurement system.

Chemical Techniques

In-process measurement using wet chemical methods can be performed in two different ways: batch, or discontinuous and continuous.

Process autotitrators draw a sample from the process at a regular interval and deliver the sample to a titration vessel. Once in the vessel, the sample may be diluted or prepared in other ways for a titration, very similar to a titration performed in the lab. An autoburet delivers the titrant until an end point is sensed. The titration cell is then drained and rinsed, and a new sample is drawn. Cycle times depend on the chemistry, but are typically 5 to 15 min. The end point may be determined potentiometrically, conductimetrically, or photometrically. Methods to measure acid value (number) are common examples.

In continuously flowing wet chemistry methods, a very small sample is injected into a flowing stream that can be a solvent or a reagent. (In some applications, a small portion of the process stream is the carrier and reagent is injected into it.) Additional reagent(s) can be added, as can heat, mixing, time to allow a reaction, etc., until the reacted sample reaches a detector. Detectors are most commonly photometers, but flow-through pH and other electrochemical detectors are also available. The flowing system can be continuous (flow injection analysis), bubble segmented (as in autoanalyzers), or a variant of FIA, sequential injection, in which a rotary valve takes the place of much of the tubing.[12]

Miscellaneous Techniques

Quartz Crystal Microbalances Certain crystals are known to generate an electric signal when they are deformed; conversely, these crystals can be caused to move when a voltage is applied. These phenomena are known as the piezoelectric effect, and it has been used to create sensors. The former effect has been used to detect pressure, acceleration, temperature, force, and thickness; the latter effect has been applied to measure various analytes, including moisture, in gases. The frequency of crystal oscillation is affected by the mass of material on the crystal, so that a crystal coated with an absorbent material will vibrate differently when the coating absorbs more or less analyte. If the specificity of the coating is high, a sensitive and specific analytical sensor can be developed. Surface acoustic wave (SAW) sensors, in which the speed of

© 2003 by Béla Lipták

sound transmission through the coating is affected by the absorbed analyte, can be even more sensitive.

Mass Spectrometry Previously only available for gas streams, mass spectrometry (MS) is becoming available for liquids as well. Various approaches to the method are used, but all require a gaseous sample (vaporized, if necessary) that is injected into a vacuum and ionized (usually by an electron beam). The ionized sample molecules and the charged fragments of their decomposition are then sorted and measured by their mass-to-charge ratio. This last process can be accomplished by the time of flight of the ions down an evacuated tube, their trajectory through a magnetic field, or selection by an electrostatic field. Detection is by electron multipliers or other devices. The most common application of process MS is in gas plants, where many gases can be detected simultaneously, or multiple streams can be examined sequentially.

Nuclear Magnetic Resonance Nuclear magnetic resonance (NMR) is an excellent technique for compositional information. In the laboratory, it is widely used to identify unknown materials. Its use in process analysis is a relatively recent occurrence. NMR makes use of a fundamental property of all matter—its nuclear structure. (Despite the fears of the public, NMR is not a technique involving radiation. If an application is contemplated using NMR, this will need to be explained to plant personnel.) NMR probes the molecules by applying both a magnetic and Rf field. Depending on the instrument, this can yield a simple number or a relatively high resolution spectrum. NMR can only measure nuclei of atoms with a magnetic moment (caused by an odd number of neutrons or protons). Therefore, the technique can only be used to measure species containing ^{1}H, ^{13}C, ^{14}N, ^{19}F, and ^{31}P. From a practical standpoint, process instruments have not yet been built that are sensitive enough to be used with anything other than proton NMR. Low-resolution (wide-band or pulsed) NMR units are useful for the measurement of free (unbound) proton-rich compounds such as water or oil.

Analyte-Specific Techniques

Many analytes have unique characteristics that have led to instruments designed specifically for their measurement. Water[13] and oxygen stand out as examples.

Water The measurement of water in the gas phase (humidity) is one of the most common. There may be more patents for humidity sensors than any other measurement. With so many different approaches for the measurement, selection of the appropriate one for a given application is both complicated and critical.

In the liquid or solid phase, moisture measurement can also be made with a wide variety of techniques. Already mentioned in this chapter were IR and NIR, microwave and Rf, and neutron techniques. In addition, there are techniques based on capacitance, impedance, and electrical resistance.

Several chapters of this book are devoted to water measurement in more detail.

Oxygen Oxygen is an important and unique analyte in industry. It is measured as the element in both gas and liquid samples. In the gas phase, it is important for breathing (environmental sensing), combustion control, and chemical stability. As mentioned previously, oxygen is paramagnetic and can be measured using this property. Such instruments operate best in relatively clean, noncondensing environments with oxygen levels from ~0.5% to ambient levels. Oxygen can also be measured electrochemically, and several varieties of instruments are available using different electrochemical techniques. High-temperature catalytic instruments are most commonly used in combustion control applications where the gas stream is already hot and the oxygen level is low. Fuel cell (amperometric) devices are also available. They require periodic replacement of the fuel cell, as it is a consumable part of the measurement.

Oxygen dissolved in water (and other liquids) can also be measured with an electrochemical probe. The oxygen diffuses through a membrane to the active electrode.

One of the parameters of interest in pollution control is the oxygen demand of the effluent. This is a measure of the organic load in the system, which will potentially use oxygen as it is consumed by microorganisms (biological oxygen demand (BOD)) or reacts chemically (chemical oxygen demand (COD)). Laboratory measurement of BOD takes several days of incubation and requires the sample to be inoculated with the appropriate organisms. Instruments are available that can reduce this time. Total organic carbon (TOC) analyzers give a close correlation to COD. Several different approaches are taken by the commercially available instruments. However, in all cases, the sample stream is first digested, and then the carbon dioxide formed from this combustion step is measured. The digestion may be strictly chemical or UV light induced (with catalyst). The resulting CO_2 is measured either directly by infrared photometry or by the change in conductivity of water into which the CO_2 is dissolved. The entire cycle is completed in a few minutes.

SAMPLING

Perhaps the most critical aspect of any analyzer installation is the sampling mechanism. The data an instrument generates can be no better than the sample it has been presented for analysis. Sampling is such an important area that entire books have been published on that subject alone.[14–16] In this volume, there are several chapters on sampling.

In the discussion above, mention has been made of analyzers, such as chromatographs, that require the sample to be withdrawn from the process and delivered to the instrument. For such instruments, there is no option, but for many of the spectroscopic and electrochemical analyzers, the option of using directly inserted probes is available.

© 2003 by Béla Lipták

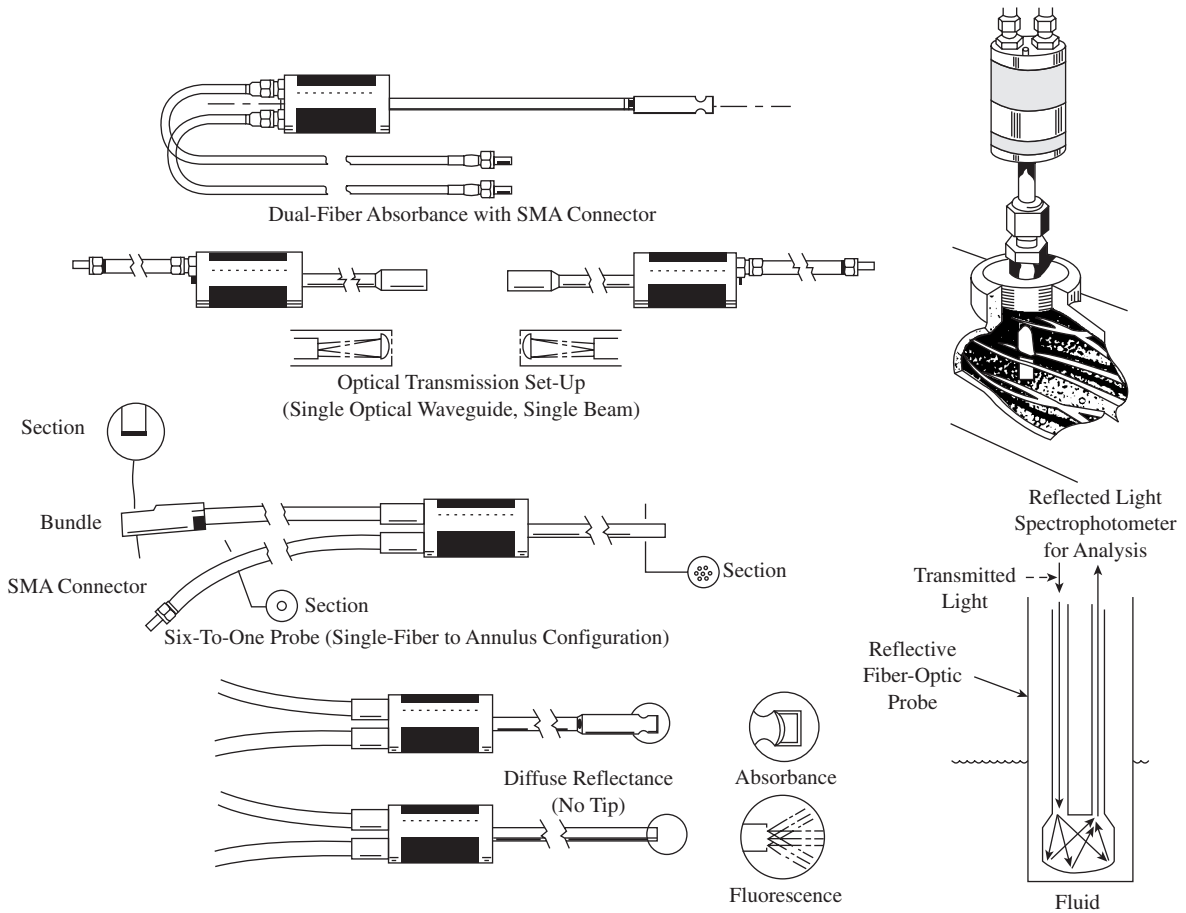

FIG. 8.1j

Fiber-optic probes can provide data on absorbance, diffuse reflectance, fluorescence, and scattering. (Courtesy of Guided Wave, Inc., http://www.guided-wave.com.)

Probe-type analyzers have been used for a long time to measure pH, conductivity, selective ion, dissolved oxygen, relative humidity, residual chlorine, oxidation–reduction potential, differential vapor pressure, corrosion, and many other variables. Improvements in quality and cost of fiber-optic probes have made them widely available for in-line measurement.

Fiber-optic probes use waveguides made of glass or quartz or other more esoteric material to deliver and return the process-modified light from the probe to the instrument located some distance away, frequently in a control room (Figure 8.1j). FOPs can acquire data on spectral absorbance, diffuse reflectance, fluorescence, or scattering, and several FOPs can be multiplexed to the same computer-controlled analyzer. Performing spectroscopic measurements over FOPs first became popular with near-infrared instruments, but their use in the UV-Vis and IR regions has grown as well.

Insertion probe critical angle refractometers are available. RI units are also available with fiber-optic sensing and transmission (Figure 8.1k). They claim the same advantages of all FOP instruments—minimal consumption of space on the pipe and ease of access to hard-to-reach locations—and they are unaffected by electromagnetic interference, dust, humidity, or hazardous environments. Measurements can be transmitted over large distances, up to 1 km (0.625 mi).

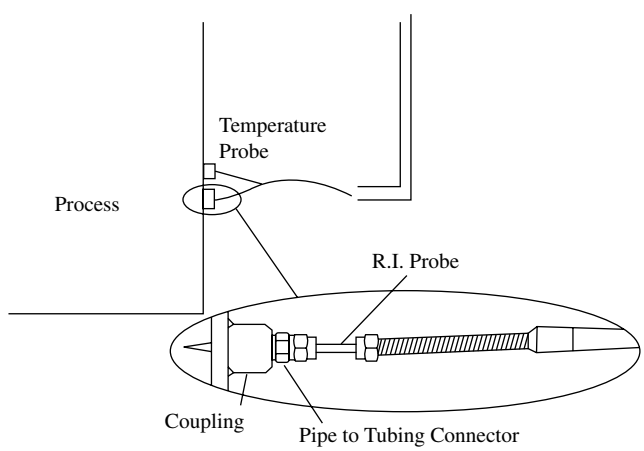

FIG. 8.1k

Temperature-compensated RI-detecting fiber-optic probe. (Courtesy of NetTest Photonics Division, formerly MetriCor, http://www.nettest.com.)

© 2003 by Béla Lipták

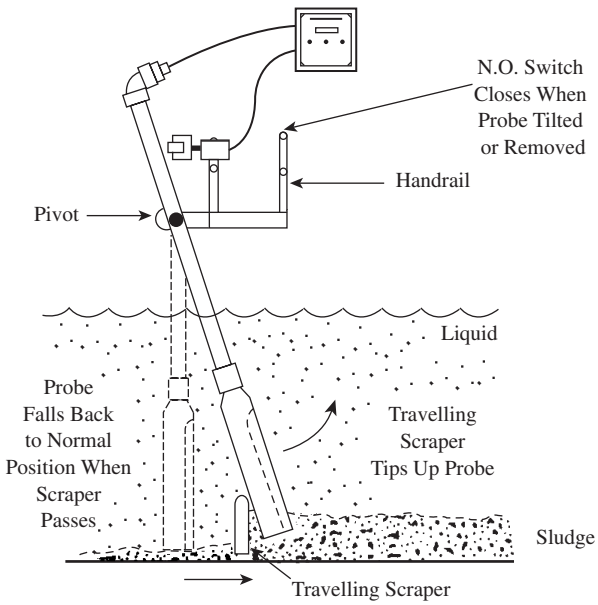

FIG. 8.1l

Probe-type sensors are used to detect the location and density of sludge and slurry layers in clarifiers. (Courtesy of Markland Specialty Engineering, Ltd., http://www.sludgecontrols.com.)

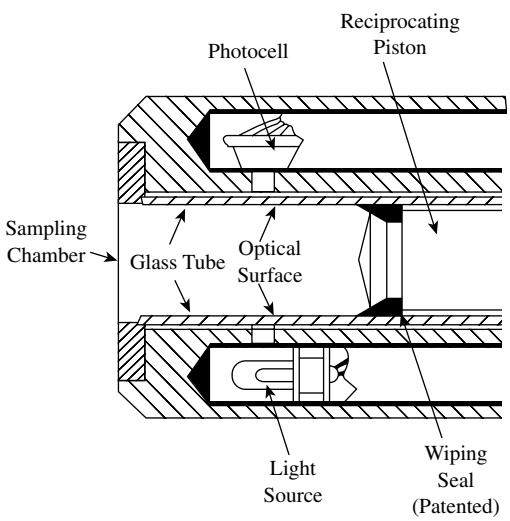

FIG. 8.1m

Probe-type self-cleaning suspended solids detector. (Courtesy of Monitek Technologies, Inc., a Metrisa Company, http://www.monitek.com.)

Probe-type sensors have also been developed for sludge and slurry measurement applications. These include the detection of sludge levels, interfaces, and densities in clarifiers and digesters (Figure 8.1l).

Figure 8.1m illustrates a mechanically self-cleaning probe design used to measure the suspended solids concentration in biological sludge. In this design, a motor-driven reciprocating piston located within a glass tube is stroked once every 15 sec. This action serves to refresh the sample while at the same time eliminating deposits and wiping the optical surfaces clean of dirt or slime. The result is a low-maintenance installation that provides reliable measurements of suspended solids concentration.

In-line, probe-type analyzers are also used in stack gas composition measurement. Some of the microprocessor-based designs also provide self-calibration for both zero and span. In addition, they can provide automatic cleaning and drying to accommodate wet-scrubber applications, in which it is necessary to periodically force hot and pressurized instrument air into the probe cavity to thoroughly dry the diffuser. The measurement is made by analyzing the measurement beam as it is returned by the retroreflector within the probe's gas measurement cavity (Figure 8.1n). These probe-type stack gas analyzers can operate in locations with high water vapor and particulate loadings and at temperatures up to 800°F (427°C).

A relatively new development in the area of in-stack analyzers is the introduction of acousto-optic tunable filters. Their main advantage is speed and the elimination of maintenance-prone mechanical elements such as filter wheels, moving gas cells and mirrors, diffraction gratings, and mechanical light choppers. The AOTF acts as an electronically controllable narrow-band filter that can be tuned to any desired frequency in milliseconds. As shown in Figure 8.1o, the resulting beam at the selected wavelength is directed across the stack and can simultaneously measure the concentrations of CO, CO_2, C_2H_6, CH_4, NO, NO_2, H_2O, etc. This is achieved by the computer selecting the frequencies required for the measurement of the concentration of each component and the AOTF being tuned to each of the selected frequencies one at a time, but at a high speed. This results in a "scanning" spectrometer without moving parts.

Probe Cleaners

While probe-type in-line analyzers can eliminate the transportation lag and sample deterioration problems associated with on-line analysis, they are not without problems of their own, the largest of which is fouling. Various mechanisms are available to clean the probe automatically. It is recommended that when a probe cleaner is used, it be placed inside a sight glass so that the operator can continuously observe the performance of the cleaner (Figure 8.1p). Wide varieties of probe-cleaning devices are available on the market. Their features and capabilities for various types of coatings, and a list of their suppliers are given in Table 8.1q. Probe cleaners for pH and other electrodes have been available for many years.

If there is no sampling system, the integrity of the sample is automatically guaranteed, and preference should be given to sensors that penetrate the process pipe with a retractable, cleanable probe. Probe sensors, either solid or membrane, require periodic cleaning, which can be done manually, by withdrawing the probe through an isolating valve so that the

© 2003 by Béla Lipták

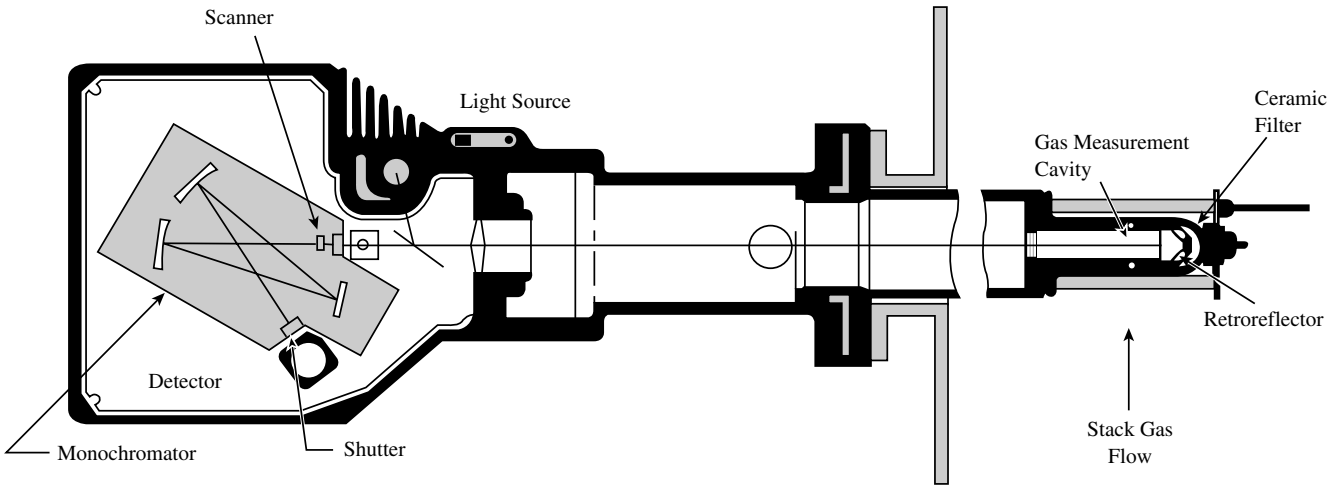

FIG. 8.1n

Probe-type stack gas analyzer. (Courtesy of Monitor Labs, Inc., a subsidiary of Spirent plc, formerly Lear Siegler, Inc., http://www.monitorlabs.com.)

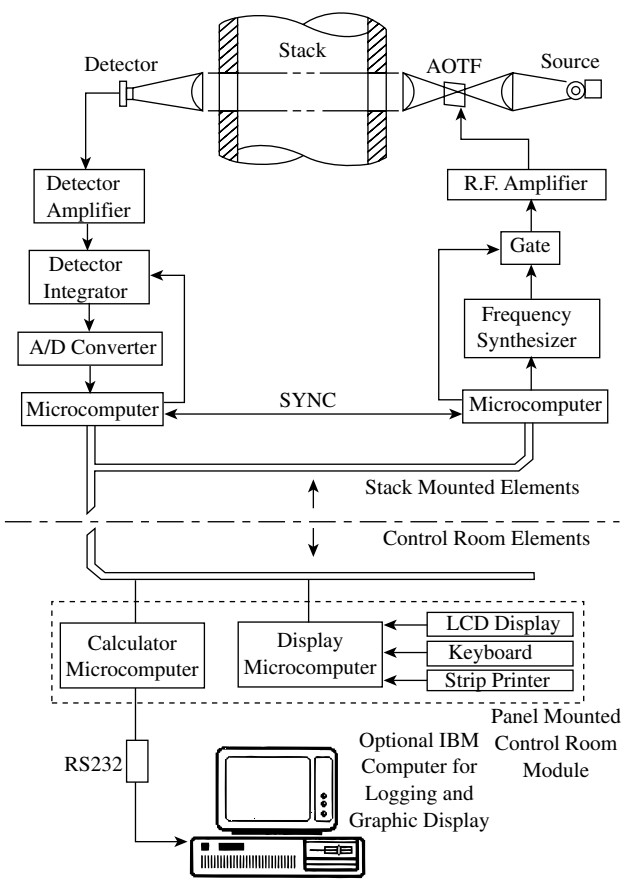

FIG. 8.1o

AOTFs can enhance the speed and increase the reliability of multicomponent analysis in stack gases.

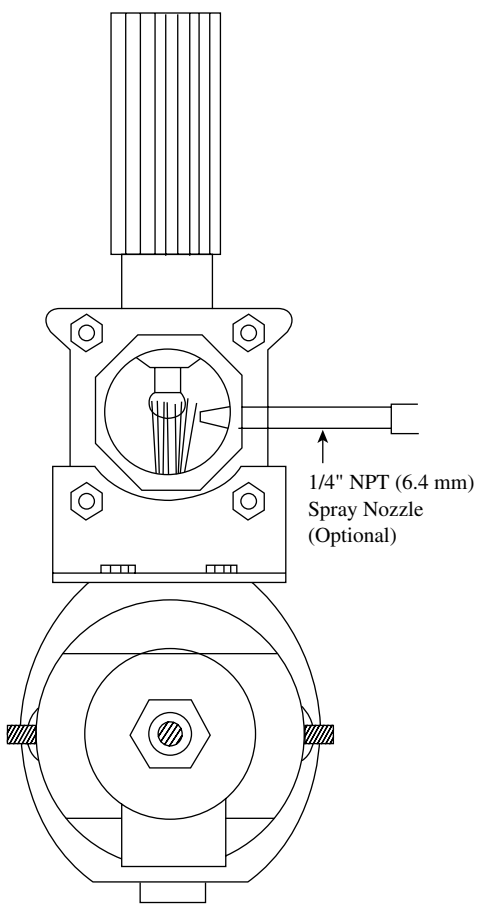

FIG. 8.1p

Probe cleaners should be mounted in sight-flow glasses for good visibility. (Courtesy of Aimco Instruments, Inc.)

© 2003 by Béla Lipták

TABLE 8.1q
Selection of Automatic Probe Cleaners[a]

	Applicable Choice of Probe Cleaner						
	Mechanical		*Chemical*			*Hydrodynamic (Self-Cleaning)*	*Acoustical Ultrasonic*
	Brush	*Rotary Scraper*	*Acid*	*Base*	*Emulsifier*		
Service							
Oils, fats		√			√		√
Resins (wood, pulp)				√			√
Emulsion of latex		√					
Fibers (paper, textile)						√	
Solid suspensions						√	
Crystalline precipitation (carbonates)	√	√	√				
Amorphous precipitations (hydroxide)	√	√	√				√
Material of construction	Stainless steel (brush pH 7–14)	Stainless steel	PVC	PVC	PVC	Stainless steel	Polypropylene, stainless steel
Temperature °F	40–140	40–140	40–140	40–140	40–140	40–250	40–195
°C	4–60	4–60	4–60	4–60	4–60	4–120	4–90

[a]Probe cleaner suppliers:
ThermoAnderson (Teflon brush, http://www.andersoninstruments.com)
Branson Cleaning, a subsidiary of Emerson (ultrasonic cleaners, http://www.bransoncleaning.com/ppg/index.html)
Fetterolf Corp. (spray rinse valve, http://www.fetterolfvalves.com)
Helios Research Corp. (tank spray washers, http://www.heliojet.com)
Polymetron, Division of Danaher Corp. (probe cleaners, http://www.polymetron.com)
Spraying Systems Co. (tank spray washers, http://www.spray.com)
Toftejorg Inc. (tank spray washers, http://www.toftejorg.com)
Gamajet Cleaning Systems (tank spray washers, http://www.gamajet.com)
Many or most vendors of electrodes can provide self-cleaning or auto-cleaning capability for their systems. Many operate on a timer, cleaning the electrode periodically. Some can automatically extract a probe from the process, clean, and even recalibrate before reinserting it into the line. For example, pH, ORP, and ISE probe vendors GLI (Great Lakes, http://www.gliint.com) and Foxboro (http://www.foxboro.com/index.htm) have a variety of systems to clean electrodes, including ultrasonic, brushes, and Teflon balls.

process is not opened when the electrode is cleaned, or automatically. Automatic probe-cleaning devices may be pressurized liquid or gas jets, or thermal, mechanical, or ultrasonic cleaning and scraping devices.

ANALYZER LOCATION

The location of the analyzer can be critical to the success of the installation. If the instrument is to be installed at some distance from the process, the lines bringing the sample to the instrument must be considered. Many questions will need to be answered. For example, what is the lag time to reach the instrument? Do the lines need heat tracing? Will the sample be returned to the process?

Ambient conditions for the analyzer must be considered. Should the instrument or several instruments be housed in an analyzer house or shelter? Instruments require power and other utilities that must be included in the planning. Access to the instrument for maintenance, local readout or display of the measured value, or of diagnostic information should be considered. Quality of the electrical power can be critical, as many microprocessors in analyzers can be reset or damaged by voltage spikes.

If a sampling system is used, variation in pressure in vents and drains, and oil or moisture, or both, in air lines can wreak havoc on the system. The temperature and humidity of the atmosphere surrounding the analyzer may also contribute to unreliable performance.

Fire and explosion are the major safety hazards of analyzer installations (See Table 8.1r). The safety of analyzer houses is also a consideration. (See Sidebar 8.1s by Georg Erk.) The inability of most laboratory instruments to meet electrical requirements limits their use in on-line applications. Often, however, purging an analyzer that is not explosion-proof allows it to be used in hazardous areas. Samples or stored reagents containing toxic, flammable, or noxious substances are also safety hazards. This can be a major issue when considering liquid chromatography analyzers, for example.

© 2003 by Béla Lipták

TABLE 8.1r
Electrical Area Classifications

Flammable Gas Class I	*Combustible Dust Class II*	*Ignitable Fibers Class III*
Group A: acetylene	Group E: metal dust, aluminum, magnesium, etc.	No groups listed
Group B: hydrogen or manufactured gas	Group F: carbon black, coal or coke dust	
Group C: ethyl-ether, ethylene, cyclopropane	Group G: flour, starch, grain dust	
Group D: gasoline, hexane, naphtha, benzene, propane, butane, alcohol, acetone, benzol, lacquer solvent, natural gas		

Division 1 Division 2 Division 1 Division 2 Division 1 Division 2

Class I Flammable Gases	
Division 1 Locations	*Division 2 Locations*
Locations in which:	Locations in which:
(1) Hazardous concentrations exist continuously, intermittently, or periodically under normal operating conditions.	(1) Gases are handled, processed, or used, but will normally be confined to closed containers or systems from which they can escape only in accidental rupture or abnormal operation of equipment.
(2) Gases exist frequently because of repair, maintenance, operations, or leakage.	(2) Gases are normally prevented by positive ventilation, but might become hazardous through failure of ventilating equipment.
(3) Breakdown or faulty operation might release gases that might cause simultaneous failure of electrical equipment.	(3) Adjacent to Class I, Division I locations in which gases might occasionally be communicated.

HANDLING THE DATA

Another issue that must be considered during the analyzer selection process regards the data. How will the valuable data your instrument and sampling system have generated be transferred from the analyzer to the people and control system computer that can make use of it? What kind of output is there? Will there be a local display?

For years, most analyzers provided only an analog output of current (most common, and typically 4 to 20 mA) or voltage. In recent years, this has changed so that more and more analyzers provide a digital output, as well as, or instead of, the analog output. In the case of the analog output, analyzers generally need to be calibrated in two ways. First, as already mentioned, calibration standards (knowns or samples that are independently measured by the lab) are determined and used to set the instrument, frequently just a zero and span setting. The second calibration is more of an adjustment. The output of the analog signal must be set. In other words, the low and high output must be made to read correctly. Frequently this must also be matched to the input on the control system. For example, an NIR calibrated to read percent moisture of wheat flour from 0 to 25% might have its 4 to 20 mA output set so that 4 mA equals 10% moisture and 20 mA equals 25%, thus providing higher resolution for the output.

Newer-style analyzers provide digital outputs. These may be a relatively simple ASCII output using an RS232 connection or Ethernet, TCPIP, etc. If an analyzer provides a single piece of information, such as moisture, the issue is quite different from another analyzer that measures a process stream and transmits the concentrations of five different constituents, e.g., a gas chromatograph measuring three alkanes, two alkenes, and several aromatic compounds.

Even more complex is the question of chemometric models that are used by some spectral techniques (IR, NIR, for example) and are beginning to be used in chromatography as well.

When selecting the analyzer for an installation, the data handling must be considered. What inputs are available on the control system? Will chemometric calculations be done on the analyzer system or a separate computer system or by the control system? What kind of cable is needed for the data transmission, and over what distance can it be used without degrading the signal? How does that affect installation cost?

MAINTENANCE

Analyzer hardware is likely to receive better care if it is accessible and housed in pleasant surroundings, such as in air-conditioned buildings. Spare parts and special testing components should be ordered at the same time as the system to avoid future delays; the availability and most effective use of qualified maintenance personnel are also factors of major importance.

Analyzers already used in the plant are helpful in determining maintenance and spare parts requirements. Major subassemblies not stocked as spare parts can also be interchanged and can help to obviate waiting for parts for the duplicated system. Standardizing on one model of a particular analyzer within a site will reduce training and spare parts costs.

COST

For the approximate cost ranges of the various analyzer categories, refer to Table 8.1t, and for more accurate costs of the various analyzers, refer to the feature summaries at the beginning of each section in this chapter. The cost elements of an analyzer installation include the following:

Engineering study
Analyzer
Recorder or other display hardware
Sample system
Startup and checkout in the laboratory

© 2003 by Béla Lipták

Sidebar 8.1s

Safety of Analyzer Houses (by Georg Erk)

With major input from the U.S. National Delegation and under its leadership, the International Technical Commission issued the document "Safety of Analyser Houses," IEC 61285 Ed. 1.0.b: 1994.

This document discusses all aspects of the safety of analyzer houses. It is recommended that the reader obtain the full document for detailed information, specifications, and documentation for the design and installation of analyzer houses and their components. It is available from:

Customer Service
American National Standards Institute
25 West 43rd Street
New York, NY 19936
Telephone: 212 642-4980
Fax: 212 302-1286

www.ansi.org and their Information Handling Service—Global Engineering Documents
Hard copy: U.S. $96
Electronic: U.S. $89

The major concepts of this international standard are:

Analyzers and analyzer sampling system require varying degrees of protection. In some cases, the instrument itself may require additional protection, such as an analyzer case, analyzer cabinet, a shelter, or a house. The selection of the housing may be determined by the minimal protection requirement.

The highest cost installation is the house, but it is generally justified when regular attention is needed and a high service factor is expected. For installation in extreme conditions, the house may need a natural or a forced ventilation system.

The electrical area classification for the location of the house should be in accordance with IEC 60079-10.

If toxic materials are introduced into the house, the ventilation system must ensure that the occupational exposure limit (OEL) is not exceeded under normal or any likely fault condition.

Safety monitoring and alarm systems can vary considerably from simple alarms direct from the analyzer to announce, for example, purge failure; to interactive systems taking inputs from gas detectors, fire detectors, and ventilation monitors; to initiate alarms, automatic shutdowns, extinguisher release, and interlocks on ventilation systems control.

Types of failure in the system that require monitoring, alarming, or shutdown systems are ventilation failures, flammable gas or vapor detection, toxic gas detection, oxygen deficiency detection, fire detection and protection, and purge failure.

Alarms generated and displayed may be local audible and visual systems, but in most cases, they will also require transmittal to the plant operator and into the central control room.

On a more general note, IEC Technical Report IEC/TR 61831: 1999, "On-Line Analyzer Systems: Guide to Design and Installation," an 84-page document, defines many more items for consideration when dealing with design, installation, and documentation of analyzer systems. The first edition of this document was printed in July 1999 and may be available directly from IEC as follows:

International Electrotechnical Commission
3, rue de Varembe
Geneva, Switzerland
Fax: +41 22 919 0300
E-mail: inmail@iec.ch
http://www.iec.ch

Calibration standard
Installation costs
Spare parts
Startup and checkout in the plant
Utilities and reagents
Training repairmen
Maintenance

SUMMARY

In an analyzer project, there are many different options and choices to be made. The skilled analyzer engineer or chemist must make many decisions and, in general, none of them are right or wrong; as in most of life, compromise is the order of the day. We must balance the cost, complexity, maintainability, etc., against the value of the measurement data to the process and make our choices. Tables 8.1t to 8.1v provide some summary and comparison information that may help clarify the different techniques and which one might be best for a given analyzer project. Table 8.1t compares key attributes (cost, complexity, type of sample, etc.) for many of the techniques covered in this section. Table 8.1u provides analyzer suggestions for some commonly measured analytes. Finally, Table 8.1v provides suggestions for analysis techniques for some common analyzer applications. All three tables should be taken (and used) with

© 2003 by Béla Lipták

TABLE 8.1t

Summary of Some Attributes of Major Analyzer Approaches

Use this table as a basic guide. It provides you with a starting point, to help you think about the analyte's measurable attribute. Usually, several methods will be applicable to any given analyte, depending on concentration, matrix, etc.

Technique	*Cost*	*Complexity*	*Calibration*	*Sample Phase*	*Sampling System*	*Selectivity*	*Mode*	*Range*
Gas chromatography	2, 3	2, 3	1	1, 2	3	1	1a, 3	1, 2, 3
Liquid chromatography	3	3	1	2	3	1	1a, 3	1, 2, 3
IC	3	3	1	2	3	1	1a, 3	1, 2, 3
UV-Vis								
Filters (1–2 wavelengths)	1	1	1	1, 2	1	1, 2, 3	1a, 2	1, 2, 3
Full spectrum	2, 3	1	2, 3	1, 2, 3	1	1, 2, 3	1a, 2	1, 2, 3
Fluorescence (filter)	2	1	2	2, 3	1	1, 2	1a	1, 2
NIR								
Filters (2–6 wavelengths)	2	1	2	2, 3	1, 2	2	1a, 2	2, 3
Full spectrum	3	2, 3	3	2, 3	1, 2	2	1a, 1b, 2	2, 3
IR								
Filters (2–6 wavelengths)	2	1	2	1, 2, 3	1, 2	1, 2	1a, 1b, 2	2, 3
Full spectrum	3	2, 3	3	1, 2	1, 2	1, 2	1a, 1b, 2	2, 3
Raman, with fiber optics	3	2, 3	2, 3	2	2	2	1b, 2	2, 3
Microwave/Rf	2, 3	2	2	2, 3	2	3	1a, 1b, 2	2, 3
RI	1, 2	1	1	2	1	3	1b, 3	2, 3
Turbidity	1, 2	2	1	2	1	3	1b, 2	2, 3
Particle size	3	2	1	1, 2, 3	1, 2	3	1b, 2, 3	N/A
XRF	3	3	1	2, 3	1, 2	1	1a, 1b, 2	2, 3
Potentiometric (pH/ISE/ORP)	1	1	1	2	1, 2	1, 2	1b, 2	1, 2, 3
Conductance	1	1	1	2	1	3	1a, 1b, 2	2, 3
Amperometric (fuel cell, galvanic/polarographic)	1	1	1	1, 2	1	1, 2	1b, 2	1a, 2, 3
Autotitration	2, 3	2	2	2	2	2	3	1, 2, 3
FIA	3	3	2	2	2	2	2, 3	1, 2, 3
MS	3	2	2	1	2	1	2	1, 2, 3
NMR	3	3	2	2	2	2	3	3

Explanation of Codes:

Attribute	*Code 1*	*Code 2*	*Code 3*
Cost	<$5000	$5000–20,000	>$20,000
Complexity	Low	Moderate	High
Calibration	2 points (or does not need)	Several points	Chemometrics
Sample Phase	Gas	Liquid	Solid
Sampling System	None	Simple	Complex
Selectivity	Specific	Varies with system	Nonspecific
Mode	Noninvasive (a); invasive (b)	Continuous	Intermittent
Range	Trace (<0.1%)	0.1–5%	>5%

Note: N/A = not applicable. As with all generalizations, these comparisons should be taken as a guide. Different installation schemes, different analytes, etc., can dramatically change costs, complexity, and the other attributes in the above table. The addition of fiber optics to any of the optical techniques will provide increased accessibility to the process from remote locations and eliminate the need for a sampling system, but the cost of the fiber, especially in the mid-infrared region, is considerable.

© 2003 by Béla Lipták

TABLE 8.1u

Analyzer Selection Guide for Some Common Analytes

The analyzers suggested here make use of the main measurement attributes of each analyte, so that, for example, a UV analyzer is suggested for nitrobenzene, a strong UV absorber. Most organic compounds can be measured using gas or liquid chromatography, so those techniques are not noted for every analyte in the table. Many additional factors will affect the final analyzer choice, especially concentration and matrix. See the text.

Acetaldehyde	9	Furfural	9
Acetic anhydride	9	Hazardous gases	1
Acetone	9	Hexane	3
Acrylonitrile	9	Hydrazine, ppb	17
Aldehydes	3, 9	Hydrogen chloride	1, 6
Alkyl chloride	1	Hydrogen cyanide	1
Aluminum	6	Hydrogen fluoride	1
Amines, ppm	17	Methane	3
Ammonia	1, 3, 5, 6, 11	Methyl bromide	1
Aniline	9	Methyl chloride	1
Argon	11, 14, 15	Methylene chloride	1, 3
Bromine	9	Nitrogen compounds (e.g., NH_3, NO_3^-, NO_2, amines)	6
Butadiene	9, 10	Nitrogen peroxide	9
Butane	2, 7, 8	Nitrous fumes	1
Caffeine	4, 9	Potassium dichromate	9
Carbon disulfide	1, 9	Propylene dichloride	1
Chlorine	1, 5, 6, 9, 12	Proteins	6, 9
Chlorine, residual	1, 5, 6	Residual chlorine	1, 5, 6
Chlorine, ppm	1	Sulfuric acid	2, 5, 6, 19
Chlorobenzene	1	Tetraethyl lead, ppb	17
Chloroform	1	Trichloroethylene	1, 3
Color	9	Trichloroethylene, ppm	17
Cyclohexane	6, 10	Ketones	9
Diolefin vapors	9	Methanol	3
Ethane	3	Nitrobenzene	9
Ethyl bromide	1	Nitrogen dioxide, ppm	14, 15
Ethyl chloride	1	Nitrous oxide	3
Ethylene bromide, ppm	17	Oxygen	1, 6, 11, 13, 16
Ethylene chloride, ppm	17	Propane	3, 14, 15
Ethylene glycol	10	Pyridine	9, 14, 15
Ethylene in %	3, 14, 15	Silicon	18
Ethylene oxide	3, 11	Sulfur dioxide	1, 3, 6, 9, 11
Freon	3, 11	Tetrachloroethylene, ppm	17
		Vinyl chloride	1, 3

Code numbers used:

1. Electrochemical (polarographic, amperometric, fuel cell, etc.)	11. Thermal conductivity
2. Conductance	12. Phototape
3. IR	13. Zirconium oxide
4. NIR	14. Mass spectrometer
5. pH, ORP, ISE	15. Chromatography (gas or liquid)
6. Wet chemistry (FIA, autotitration, etc.)	16. Paramagnetic
7. Electrolytic hygrometer	17. Flame ionization
8. Capacitance	18. XRF
9. UV-Vis	19. Density
10. Refractometers	20. Miscellaneous analyte-specific techniques

© 2003 by Béla Lipták

TABLE 8.1v

Analyzer Selection Guide for Some Common Applications

Use this table as a basic guide. It provides you with a starting point, to help you think about the analyte's measurable attribute. Usually, several methods will be applicable to any given analyte, depending on concentration, matrix, etc.

Acidity (of aqueous solutions)	5, 6	Ethylene in C_1–C_8, H_2, CO_2	15
Acids in water	2, 5, 6, 10,19	Ethylene oxide in methane, ethane, propane	14, 15
Alcohol in water	10, 19	Fluoride in water	5, 6
Alkalinity of water	6	Freon moisture content	7, 20
Ammonium ions in water	5, 6	Glycerine and salts in water	10, 19
Aromatics in vapors or in water	9	Green, white, or black liquor concentration	10
Benzene in ethanol or cyclohexane	9, 10	Hardness (total) in water	6
Benzene in raffinate or in ethyl alcohol	9	Helium in oxygen, nitrogen	11
Benzene moisture content	4, 8	Helium moisture content	7, 20
Benzotriazole in water, ppm	9	Hexane moisture content	7, 20
Brine concentration	2, 10, 19	Hexavalent chromium	6
Bromide ions in water	5	Humidity (air)	7, 20
Butadiene in butanes and butylenes	9, 15	Hydrazine in water	6
Butadiene in styrene	10, 15	Hydrocarbon in H_2S, CO_2, air	1, 14, 15
Cadmium ions in water	5, 6	Hydrocarbon vapors in ambient air	17, 11
Caffeine in coffee	4	Hydrogen impurities (in O_2, N_2, CO, H_2O)	14, 15
Caffeine in water or ethylaetate or CH_2Cl_2	9	Hydrogen in chlorine	9, 11
Calcium ions in water	5, 6	Hydrogen in nitrogen, oxygen, inert gases	11, 15
Carbon dioxide in carbonated beverages	3	Hydrogen sulfide in air	1, 9, 12
Carbon dioxide in gases	1, 3, 6	Hydrogen sulfide in hydrocarbon liquids	6
Carbon dioxide moisture content	7, 20	Hydrogen sulfide in natural gas or in stack gas	1, 9
Carbon monoxide in gases	1, 3	Iodide ions in water	5, 6
Carbon monoxide moisture content	7, 20	Iron (total) in water	6
Carbon tetrachloride in air	1	Isobutane in C_5, *n*-C_6, *i*-C_7 hydrocarbons	15
Catsup and tomato paste (solids content)	10, 19	Isobutane in *n*-butane (liquid)	10
Caustic concentration	2, 6, 10, 19	Isoprene in solvents	9
Chemical oxidation demand	6	Jams, jellies, juices for sugar content (Brix)	10
Chloride ion in aqueous solution	5, 6	Kerosene moisture content	4, 8
Chlorine in air	1, 11	Lead ions in water	5, 6
Chlorine in ethylene dichloride	9	Methane in other gases	3, 11, 14, 15
Chlorine, ppm, in off-gas or phosgene	9	Methane moisture content	4, 7, 20
Chromium in water (hexavalent or total)	6	Methanol in water	10, 19
Citrus juice (Brix, sugar concentration)	10, 19	Natural gas moisture content	3, 7, 8, 20
Combustibles in air	17	Neon moisture content	3, 7, 20
Copper in water	5, 6	Nitrate and nitrite in water	6
Cyanide in water	5, 6	Nitric acid in water	2, 5, 6, 10
Cyclohexane in *n*-hexane/methylcyclopentane	10	Nitric oxide in air	1
Divalent ions in water	5, 6	Nitrogen (NH_3, NO_3^-, NO_2^-, total, etc.) in water	6
Divinyl acetylene in acrylonitrile	9	Nitrogen in argon	14, 15
Ethane moisture content	7, 20	Nitrogen moisture content	3, 7, 20
Ethanol in benzene or in water	10, 19	Octane rating of gasoline	4
Ethyl chloride moisture content	7, 20	Oil (triglyceride) in milk and other foods	4
Ethylene glycol in water	10, 19	Oil in liquid Freon	3, 4

© 2003 by Béla Lipták

TABLE 8.1v Continued
Analyzer Selection Guide for Some Common Applications

Oil in wax	10, 19	Starch in water	10, 19
Ortho- and *meta*-xylene in *para*-xylene	10, 14, 20	Steam in air	3, 20
Ortho-phosphate in water	6	Styrene in ethyl benzene	10, 20
Oxygen (dissolved) in water	1	Sucrose in water	3, 6, 10, 19
Oxygen in argon, hydrogen	11, 13, 14, 15, 16	Sugars in water, syrups	3, 6, 10, 19
Oxygen in ethylene	11, 13, 14, 15, 16	Sulfate and sulfite in water	6
Oxygen in stack gases	13, 16	Sulfur dioxide in stack gas	3, 9
Oxygen moisture content	3, 7, 20	Sulfur dioxide moisture content	3, 7, 20
Ozone in air	9	Sulfuric acid in water	5, 6, 10, 19
Paper moisture	3, 4, 20	Tetranitromethane in air	3
Phenol in water	6, 9	TiO_2 in paint or paper	18
Phosgene in air	1, 9, 12	Toluene in hydrocarbons	9
Phosphoric acid concentration in water	5, 6, 10, 19	*Trans*-unsaturation of vegetable oils, detergents	3, 4
Phosphorus (total or *o*-phosphate) in water	6	Vinyl acetate in polymer vapor	3
Polymer–solvent mixtures	10, 19	Water (moisture) in liquids	3, 4, 20
Potassium dichromate in water	5, 6, 9	Water (moisture) in solids	4, 8, 20
Potassium ions in water	5, 6	Water (moisture, humidity) in gases	3, 7, 20
Propane moisture content	3, 7, 8, 20	Water hardness	5, 6
Propylene glycol in water	3, 10, 19	Water in liquid SO_2	3, 4
Propylene moisture content	3, 7, 8, 20	Water in methylene chloride liquid	3, 4
Silicates in water and in seawater	6	Water in organic liquids	3, 4
Silicon in paper	18	Water vapor in air	3, 7, 20
Sodium carbonate in water	2, 3, 5, 6	Wax in oil	10, 20
Sodium chloride in water	2, 10, 19	Wine, ethanol	10, 19
Sodium hydroxide in water	2, 4, 5, 6, 19	Xylenes in hydrocarbon	9
Sodium ions in water	5		

Code numbers used:

1. Electrochemical (polarographic, amperometric, fuel cell, etc.)	11. Thermal conductivity
2. Conductance	12. Phototape
3. IR	13. Zirconium oxide
4. NIR	14. Mass spectrometer
5. pH, ORP, ISE	15. Chromatography (gas or liquid)
6. Wet chemistry (FIA, autotitration, etc.)	16. Paramagnetic
7. Electrolytic hygrometer	17. Flame ionization
8. Capacitance	18. XRF
9. UV-Vis	19. Density
10. Refractometers	20. Miscellaneous analyte-specific techniques

Note: Careful study of this table will show some apparent inconsistencies, but also some patterns. The inconsistencies are not real; they occur when several techniques are listed because the concentration and details of the application are missing. For example, the concentration vs. conductance curve for sulfuric acid increases with concentration and then rolls over and decreases. The use of conductance is fine in some ranges, but not in others. An example of one of the patterns that emerge from the table is the apparent similar utility of three inferential methods of analysis: conductance, refractive index, and density. As the concentration of some analytes increases, the conductivity, refractive index, and density all change, providing three relatively simple measurements to consider.

© 2003 by Béla Lipták

the proverbial grain of salt. Analyzers are constantly changing; developments in electronics, sensing transducers, and all aspects of measurement science improve almost daily. In addition, very few applications are exactly the same. Therefore, use these tables as a starting point, and carefully evaluate all the criteria discussed in this section and the rest of this volume.

References

1. *Annual Book of ASTM Standards*, West Conshohocken, PA: American Society for Testing and Materials, 2002. http://www.normas.com/ ASTM/.
2. *Official Methods and Recommended Practices of the AOCS*, 5th ed., Champaign, IL: American Oil Chemists' Society, 1998. http://www.aocs.org/ tech/ methods.htm.
3. *TAPPI Test Methods, 1998–1999*, Atlanta: TAPPI Press, 1998.
4. Dubois, R., van Vuuren, P., and Tatera, J., NeSSI—The "New Sampling Sensor Initiative": An Enabling Technology, 47th Annual ISA Analysis Division Symposium, Denver, CO, April 14–18, 2002.
5. McMahon, T. K., "The New Sampling/Sensor Initiative," *Control*, XIV(8), August 2001, 158.
6. Fussell, E., "Molding the Future of Process Analytical Sampling," *InTech*, August 2001, 32.
7. Fussell, E., "Exploring the Depths of Miniature Sampling Systems," *InTech*, September 2001, 34.
8. NeSSI website at http://www.cpac.washington.edu/NeSSI/NeSSI.htm.
9. Lide, D. R., Ed., *CRC Handbook of Chemistry and Physics*, 76th ed., New York: CRC Press, 1995.
10. Dean, J. A., Ed., *Lange's Handbook of Chemistry*, 14th ed., New York: McGraw-Hill, 1992.
11. Conductance Data for Commonly Used Chemicals, Rosemount Analytical, Fisher-Rosemount, August 1994. http://www.emersonprocess.com/ raihome/.
12. Ruzicka, J. and Marshall, G. D., "Sequential Injection: A New Concept for Chemical Sensors, Process Analysis and Laboratory Assays," *Analytica Chimica Acta*, 237, 329–343, 1990.
13. Pande, A., *Handbook of Moisture Determination and Control*, Vols. 1–4, New York: 1974–75.
14. Houser, E. A., "Principles of Sample Handling and Sampling Systems Design for Process Analysis," Research Triangle Park, NC: ISA, 1977.
15. Cornish, D. C., Jepson, G., and Smurthwaite, M. J., *Sampling Systems for Process Analysers,* London: Butterworths, 1981.
16. Sherman, R. E., *Process Analyzer Sample-Conditioning System Technology*, New York: John Wiley & Sons, 2002.
17. Nelson, R. L., "Tunable Crystal Enhances IR Analyses," *InTech*, June 1987.

Bibliography

The Basics: Books and Articles on the Fundamentals of Analytical Chemistry and Measurement

Ball, D. W., "Theory of Raman Spectroscopy," *Spectroscopy*, 16(11), November 2001, 32–34.

Ball, D. W., "Raman Spectroscopy," *Spectroscopy*, 17(2), February 2002, 50–52.

Burns, D. A. and Ciurczak, E. W., Eds., *Handbook of Near-Infrared Analysis*, New York: Marcel Dekker, 1992.

Cowper, C. J. and DeRose, A. J., *The Analysis of Gases by Gas Chromatography*, New York: Pergamon Press, 1983.

Dean, J. A., Ed., *Analytical Chemistry Handbook*, New York: McGraw-Hill, 1995.

Ewing, G., *Analytical Instrumentation Handbook*, New York: Marcel Dekker, 1990.

Galster, H., *pH Measurement*, New York: VCH, 1991.

Guiochon, G. and Guillemin, C. L., *Quantitative Gas Chromatography for Laboratory Analyses and On-Line Process Control* (*Journal of Chromatography* Library, No. 42), Amsterdam: Elsevier, 1988.

Koch, K. H., *Process Analytical Chemistry: Control, Optimization, Quality, Economy*, New York: Springer-Verlag, 1997.

Lin-Vien, D., Colthup, N. B., Fateley, W. G., and Grasselli, J. G., *The Handbook of Infrared and Raman Characteristic Frequencies of Organic Molecules*, New York: Academic Press, 1991.

McClennan, F. and Kowalski, B. R., *Process Analytical Chemistry*, New York: Blackie Academic and Professional (Chapman & Hall), 1995.

McNair, H. M. and Bonelli, E. J., *Basic Gas Chromatography*, Palo Alto, CA: Varian Instrument Division, 1968.

Meyers, R. A., Ed., *Encyclopedia of Analytical Chemistry: Instrumentation and Applications*, New York: John Wiley & Sons, 2000.

Schwedt, G., *The Essential Guide to Analytical Chemistry*, New York: John Wiley & Sons, 1997.

Settle, F. A., Ed., *Handbook of Instrumental Techniques for Analytical Chemistry*, Upper Saddle River, NJ: Prentice Hall, 1997.

van den Berg, F. W. J., Hoefsloot, H. C. J., and Smilde, A. K., "Selection of Optimal Process Analyzers for Plant-Wide Monitoring," *Analytical Chemistry*, 74(13), 3105–3111, 2002.

Wiederhold, P. R., *Water Vapor Measurement*, New York: Marcel Dekker, 1997.

Williams, P. and Norris, K., *Near-Infrared Technology in the Agricultural and Food Industries*, St. Paul, MN: American Association of Cereal Chemists, 1987.

Process Analytical Chemistry: Books and Articles Specifically on Process Measurement

Annino, R. and Villalobos, R., *Fundamentals of Process Gas Chromatography*, Research Triangle Park, NC: ISA, 1991.

Biannual Process Analytical Chemistry Reviews in *Analytical Chemistry*, e.g.: Workman, J., Jr., et al., "Process Analytical Chemistry," *Analytical Chemistry*, 71(12), 121R–180R, 1999. Workman, J., Jr., et al., "Process Analytical Chemistry," *Analytical Chemistry*, 73(12), 2705R–2718R, 2001.

Carr-Brion, K., *Moisture Sensors in Process Control*, New York: Elsevier, 1986.

Cessna, G. D., "Process Mass Spectrometry: History, Fundamentals, and Applications," ISA Conference, Houston, October 1992.

Clevett, K. J., *Process Analyzer Technology*, New York: John John Wiley & Sons, 1986.

Cuonauito, R. P., "Oxygen Analyzers," *Measurements and Control*, February 1990.

Danigel, H., "Fiber Optical Process Measurement Technique," *Optical Engineering*, 34(9), 2665, 1995.

Gill, A., "Analyzer Installation and Maintenance," *InTech*, February 1994.

Huskins, D. J., *Gas Chromatographs as Industrial Process Analysers*, Bristol, U.K.: Hilger, 1977.

Huskins, D. J., *General Handbook of On Line Process Analyzers*, Chichester, U.K.: Ellis Horwood Ltd., 1981.

Huskins, D. J., *Quality Measuring Instruments in On- Line Process Analysis,* Chichester, U.K.: Ellis Horwood Ltd., 1982.

Kalis, G., "How Accurate Is Your On-Line pH Analyzers," *InTech*, 37(6), June 1990.

Light, T. S., "Industrial Analysis and Control," chap. 10 in *Ion Selective Electrodes,* Durst, R.A., Ed., National Bureau of Standards Special Publication 314, Washington DC, 1991.

Lodge, J. P., *Methods of Air Sampling and Analysis*, Chelsea, MI: Lewis, 1988.

Long, R. L., "Sampling Valves Help Analyze Difficult Process Streams," *InTech*, May 1993.

© 2003 by Béla Lipták

Manka, D. P., Ed., *Automated Stream Analysis for Process Control*, Vols. 1 and 2, New York: Academic Press, 1982 and 1984.
McMillan, G. K., "Understand Some Basic Truths of pH Measurement," *Chemical Engineering Progress,* 87(10), October 1991.
McMillan, G. K., *pH Measurement and Control*, 2nd ed., Research Triangle Park, NC: ISA, 1995.
Merritt, R., "Hardware vs. Virtual Analyzers," *Control*, XV(2), February 2002, 35–41.
Mix, P. E., *The Design and Application of Process Analyzer Systems*, New York: John Wiley & Sons, 1984.
Ness, S. A., *Air Monitoring for Toxic Exposures: An Integrated Approach*, New York: Van Nostrand Reinhold, 1991.
Nichols, G. D., *On-Line Process Analyzers*, New York: John Wiley & Sons, 1988.
Norton, H. N., *Sensor and Analyzer Handbook*, Englewood Cliffs, NJ: Prentice Hall, 1982.
Ramanujam, R. S. and Fitzgibbon, P., "X-Ray Fluorescence for On-line Elemental Analysis," *Control*, March 1990.
Riebe, M. T. and Eustace, D. J., "Process Analytical Chemistry," *Analytical Chemistry*, 62, 65A–71A, 1990.
Schirmer, R. E., "On-Line Fiber-Optic-Based Near Infrared Absorption Spectrophotometry for Process Control," Proceedings of the ISA, 1986, pp. 1229–1235.
Sherman, R. E. and Rhodes, L. J., Eds., *Analytical Instrumentation*, Research Triangle Park, NC: ISA, 1996.
Vána, J., *Gas and Liquid Analyzers*, New York: Elsevier, 1982.
Waller, M. H., "Measurement and Control of Paper Stock Consistency," Research Triangle Park, NC: ISA, 1983.
Weaver, R., "Continuous Emissions Monitoring," *Measurements and Control,* June 1992.

Miscellaneous

Adams, V., *Water and Wastewater Examination Manual*, Chelsea, MI: Lewis, 1990.
Bandrup, J., Immergut, E. H., Grulke, E. A., Abe, A., and Bloch, D., Eds., *Polymer Handbook*, 4th ed., New York: John Wiley, 1999.
Chou, J., "Explosive and Toxic Gases Have No Place in the Work Area," *InTech*, 47(5), May 2000, 40–43.
Clansky, K. B., "The Chemical Guide to the OSHA Hazard Communication Standard," Roytech, 1991.
Dawson, R., *Data for Biochemical Research*, Oxford: Oxford University Press, 1990.
Fresenius, W., *Water Analysis*, New York: Springer-Verlag, 1988.
McMillan, G. K., *How to Become an Instrument Engineer: The Making of a Prima Donna*, Research Triangle Park, NC: ISA, 1987.
McNeil, B. and Harvey, L., *Fermentation: A Practical Approach*, IRL Press, 1990.
Rayburn, S., *The Foundations of Laboratory Safety*, New York: Springer-Verlag, 1990.
Smith, D., et al., *EPA's Sampling and Analysis Methods Database*, Chelsea, MI: Lewis, 1990.
Webster, J. G., Ed., *The Measurement, Instrumentation, and Sensors Handbook*, Boca Raton, FL: CRC Press, 1999.
Weiss, M. and Lawson, K., "Tracking Down Emissions," *Control*, January 1993.
West, H. and Zinn, C. D., "Impact of OSHA/EPA Process Safety Regulations on Control Systems," 1992 ISA Conference, Houston, TX, October 1992.
Wolfbeis, O. S., Ed., *Fiber Optic Chemical Sensors*, Vols. 1 and 2, Boca Raton, FL: CRC Press, 1991.

© 2003 by Béla Lipták

8.2 Analyzer Sampling: Process Samples

W. M. BARROWS (1972) **P. FOUNDOS** (1982) (K. A. Perrotta and R. Strauss on filters)
B. G. LIPTÁK (1995, 2003)

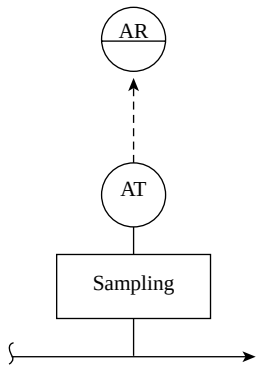

Flow Sheet Symbol

Costs:

Compressed air filters cost about $60; stainless steel bypass filters, $300 to $600; continuous-flow ultrasonic homogenizers, $3000; sludge centrifuge, $600; interval sampling pump only, $750; automatic liquid sampler system, $1500 and up; complete sampling system for single-process gas stream, $3000 to $6000; complete sampling system for single-process liquid stream, $3500 to $7000. The per-stream cost in a multistream sampling system drops as the number of streams increase.

Partial List of Suppliers:

ABB Automation Analytical Div. (www.abb.com/usa)
Advantech Automation (www.advantech.com)
Air Dimensions Inc. (corrosion-resistant sampling pumps) (www.airdimensions.com)
Air Instruments & Measurements (www.aimanalysis.com)
Ametek Process Instruments (www.ametekpi.com)
Applied Chemometrics (www.chemometrics.com)
Bristol Equipment Co. (liquid samplers) (www.bristolequipment.com)
Cole-Parmer Instrument Co. (homogenizers, composite samplers) (www.coleparmer.com)
Collins Instrument Co. (sampling systems, bypass filters) (www.collinsinst.com)
Draeger Safety (www.draeger.com)
Fluid Metering Inc. (www.fmipump.com)
GLI International (www.gliint.com)
Hach Co. (www.hach.com)
Horiba Instruments (www.horiba.com)
Kahn Instruments (www.kahn.com)
King Engineering Corp. (filters) (www.king-gage.com)
KNF Neuberber (www.knf.com)
Kurz Instruments Inc. (stack sampling) (www.kurz-instruments.com)
Markland Specialty Engineering (www.sludgecontrols.com)
MIE Inc. (www.mieinc.com)
Neutronics Inc. (www.neutronicsinc.com)
OnTrak Control Systems (www.ontrak.com)
Orbital Sciences (www.orbital-ait.com)
Orena ControlNet (www.orena.com)
Parker Filtration (www.parker.com/balston.com)
Perma Pure (www.permapure.com)
PGI International (www.pgiint.com)
Roseomunt Analytical Process Analytic (www.processanalytic.com)
Sensidyne (www.sensidyne.com)
Servomex Applied Automation (www.servomex.com)
Siemens Applied Automation (www.aai-us.com)
Siemens Energy & Automation, Process & Analytical Div. (process samplers) (www.sea.siemens.com)
TBI-Bailey Controls (probe protector from coating) (www.tbi-bailey.com)
Teledyne Analytical Instruments (process sampling systems) (www.teledyne-aicom)

© 2003 by Béla Lipták

Thermo Onix (www.thermoonix.com)
Thermo Ramsey (www.thermoramsey.com)
Tyco Valves & Controls (www.tycovalves.com)
Y2 Systems (www.y2systems.com)
Zellweger Analytics (www.zelana.com)

INTRODUCTION

This section starts with a discussion of the general considerations that the designer needs to evaluate before starting the actual hardware selection for a sampling system. Next, the various sample system components are described. The section is concluded by a detailed evaluation of the various sampling applications, considering gas, liquid, solids, stack, reactor, slurry, trace, and other types of process samples.

Sampling is also discussed in the first section of this chapter and under the individual analyzer categories. The subject of sampling stack particulate concentration is separately discussed in Section 8.3.

GENERAL CONSIDERATIONS

The sampling system is an integral and key part of an analyzer system and should be designed to obtain a representative sample; transport the sample to the analyzer; condition the sample; accomplish sample stream switching, if necessary; provide facilities for return and disposal of the sample; and provide not only calibration facilities, but also preventive maintenance features, and alarm functions for on-line reliability and operator alerts.

If a sample has to be brought to an analyzer, a sample transportation delay and a potential for interference with the integrity of the sample will be introduced. If the measured composition is to be controlled, the transportation lag can seriously deteriorate the closed-loop control stability of the system.

Even more serious is the potential for interference with the integrity of the sample, due to the effects of filtration, condensation, leakage, evaporation, and so on, because these operations can not only delay, but also change information that is to be measured: the composition of the process fluid.

Consequently, the best solution is to eliminate all sampling systems and place the analyzer directly into the process. The "in-pipe" analyzer designs are becoming more and more available. Particularly well suited for this design are the various radiant energy and probe-type sensors.

Feasibility Evaluation

Sample systems are rarely duplicated, and thus each system must be *debugged* as a new entity. In deciding the design of a sampling system, the following questions should be raised:

1. Will the sample be adversely affected by sample transport and conditioning?
2. From what stage in the process will the sample be taken?
3. How can the sample be transported to the analyzer?
4. Is the sample a solid, liquid, gas, or mixture?
5. In what phase must the sample be for analysis?
6. Must the sample be altered (filtered)?
7. Is sufficient sample available?
8. What will be the time lag introduced by transporting the sample?
9. Where is the excess sample returned?
10. Will the analyzer be shared by one or more samples?

These considerations are applicable both to the continuously flowing sample systems and to the less frequently used grab samples. Grab sampling is limited by variations in cleanliness of the sample containers, changes in the method of collecting the sample, delays in transporting the sample, and deviations in withdrawing the sample from the sample container.

The piped-in sample system usually includes the hardware for calibrating the analysis system. It also provides a tap for obtaining samples for laboratory testing. Sample conditioning systems are usually costly to maintain.

The installation price for the sampling system frequently exceeds the cost of the analyzer, but its importance overrides this economic consideration because a second-class analyzer can still furnish usable data if it operates with an efficient sample system, whereas a poor sample invalidates the entire measurement.

Therefore, the most important criterion is to keep the samples representative, both in time (short sample lines guarantee minimum transportation delays) and in composition. Whenever possible, the sample should not be tampered with because the steps of sample preparation (drying, vaporizing, condensing, filtering, and diluting) always degrade the sample.

Sample Data Requirements

A comprehensive listing of the characteristics of each sample stream, including any abnormal conditions, should be prepared before an analyzer sample system is designed. Data are usually available from process conditions and laboratory analysis in existing plants and from design data for new plants. Table 8.2a is a form to be used in summarizing the characteristics of a sample.

© 2003 by Béla Lipták

TABLE 8.2a
Sample Analyzer Data Form

Stream name or identification _____

STREAM COMPOSITION DATA

COMPONENT	CONCENTRATION IN MOL%, WT%, PPM	RANGE OF COMPONENT TO BE MEASURED

OPERATING PROCESS DATA

Temperature _____ Pressure _____

Phase: Liquid _____ Vapor _____

Corrosive components/solids _____

Stability (polymerize, decompose, etc.) _____

Sample bubble point_____ Dew point _____

SAMPLE CONDITIONS

Maximum distance: Tap to analyzer _____ Analyzer to return _____

Speed loop required: Yes _____ No _____

Sample return pressure point _____

Sample probe requirements: Connection size _____ Orientation _____

Materials of construction: Stainless steel _____ Teflon _____ Viton _____ Glass _____ Other _____

Electrical areas classification _____

Power supply _____

Output signal _____

Utilities available: Stream _____ Air _____ Cooling water_____

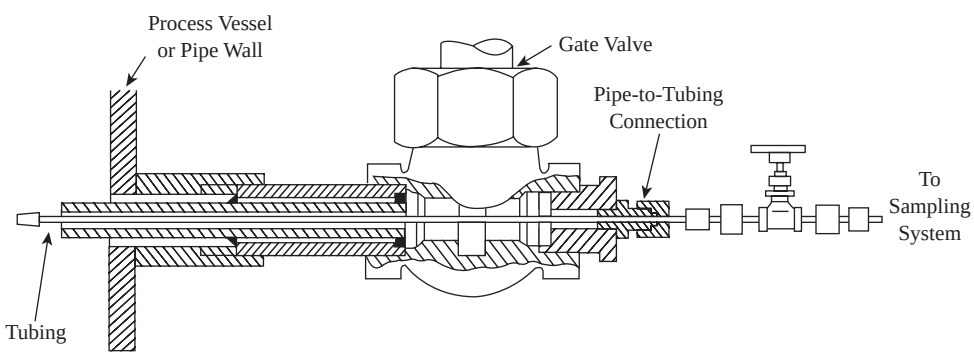

FIG. 8.2b
Sample probe assembly with process shutoff value.

Sample Takeoff Point

Sample conditioning begins with the location of a suitable sample takeoff point. To obtain a representative sample, the takeoff is usually located at the side of a process line, especially in the case of liquid samples where there is the possibility of vapor on the top of a horizontal line and dirt or solids on the bottom of the line. For sampling vapors, the connection may be located in the side or top of the process line, but in both cases with due consideration to accessibility for maintenance.

Ideally, the sample at the appropriately selected takeoff point will require little or no conditioning; however, it is good practice to install a sampling probe (Figure 8.2b) for most applications as a precautionary measure to prevent particulates from entering the sample transport system. Sampling processes that are still reacting chemically or pyrolysis gases may require reaction quenching, or fractionation, at the sample takeoff. This is done by cooling or back-flushing with an inert gas or liquid to keep the sample takeoff clean and reliably active (Figure 8.2c), while drawing off a reproducible sample for analysis.

With the advent of *in situ* analyzer detectors, the sample takeoff becomes the point of analysis and, for locating *in situ* analyzers, the above considerations must be carefully evaluated.

© 2003 by Béla Lipták

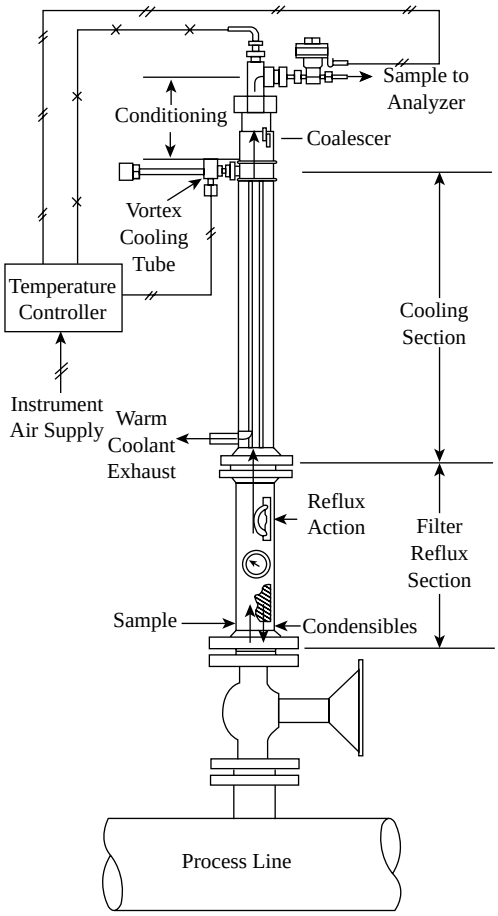

FIG. 8.2c
Pyrolysis gas sample fractionation and conditioning unit.

Sample Transport

A representative sample extract from a process line must be continuously conditioned while in transport to avoid compromising the sample integrity. Thus, provision must be made to heat or cool the line as necessary for the specific condition. The sample is normally transported in one of three ways (Figure 8.2d).

Single-line transport is the most direct approach and is used when the sample line volume is small in relation to the analyzer sample consumption so that the transport time lag is reasonably short. It is usually used when the analyzer is field-mounted close to the sample point and sample exhaust facilities are available.

Bypass-stream transport is a commonly used method for maintaining a high sample transport velocity that provides minimum transportation lag. This method is used when samples are vaporized at the tap and no facilities exist for returning the vapor to the process, or in similar situations. Consideration must be given to the fact that the sample bypass must be piped to a drain or vent. This procedure may have a negative impact on the environment, despite the fact that the cost of the sample being disposed of may economically justify a sample recovery system.

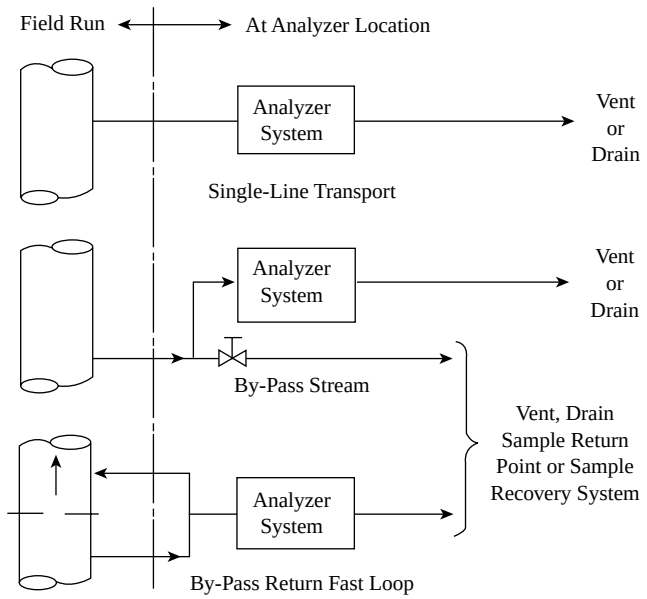

FIG. 8.2d
Sample transport methods.

Bypass-return fast loop is the most commonly used transport loop for an analyzer mounted away from the sample takeoff point. By circulating a continuous high velocity across a device, to create a differential pressure, and drawing off a bypass stream to the analyzer, a fast loop is obtained, which is adjustable with no waste in the product. In most cases, such devices as pumps, control valves, and process equipment exist in the process for this purpose. Otherwise, it may be necessary to install an orifice in the process line or a circulating sample pump. With a circulation sample pump, care must be taken to prevent cavitation by locating the pump close to the sample takeoff.

Transport Lag

After selecting the appropriate sample transport method for each analyzer system, a calculation of the sample time lag should be made, using conventional flow equations based on the following:

1. Available differential pressures.
2. Total length of the fast loop from the sample takeoff point to the analyzer location and back to the sample return point. Any restrictions on this loop should be excluded from available differential pressures.
3. Line sizes used.
4. Viscosity of the sample.

Table 8.2e should be used as an aid in establishing volumes and pressure drops for some typical tubing and pipe used in sample systems.

© 2003 by Béla Lipták

TABLE 8.2e
Dimensions and Volumes of Tubing and Pipe Used in Sample Systems

	Nominal Volume per Diameter, in.	Inner Diameter, in.	Internal Area	
			$in.^2$	cc
316 stainless steel tubing	1/8	.0787	.0048	.9571
	1/4	0.1850	0.0268	5.3035
3/8	3/8	0.0253	0.0684	13.4417
	1/2	0.4055	0.1290	25.2984
Schedule 40 pipe	1/4	0.3642	0.1040	20.4521
	3/8	0.4921	0.1891	37.4904
	1/2	0.6220	0.3038	59.7408
	3/4	0.8268	0.5363	106.6800

Sample Disposal

Sample disposal is a critical area, both from the economic point of view that would preserve any quantity of sample not used and from the environmental side that would prevent the emission of most hydrocarbons into the air.

When there is an economic justification for saving the sample, for example, liquids in boiling point and viscometer analyzers, a sample collection and return systems must be furnished to collect the sample at atmospheric pressures and pump it back at high pressure into the process. For gases with no sample return point, the sample can be pressurized back into the process, or as is most frequently done, the sample can be vented into the flare system. However, except in rare cases, venting is done directly into the atmosphere. When this is not possible, extreme caution should be taken to control the back-pressure when venting the sample into a flare or other collection system with varying pressures.

Ambient Considerations

Sample systems condition a sample suitable for introduction into an analyzer while maintaining the integrity of the sample. As has been emphasized throughout this section, once a sample is conditioned, it must be preserved in the conditioned state; therefore, provisions for heating, or in some cases cooling, the sample lines and system must be furnished for the integrity of the sample. Thus, the entire system must be protected from varying ambient temperatures, which could condense or flash the sample.

Furthermore, as a general rule, the sample should be located in enclosures that provide limited access to unauthorized personnel and also protect the equipment from any corrosive environment. It is accepted practice that systems be completely preassembled and tested in conjunction with analyzers prior to installation in the field.

Test and Calibration

The reliability of each analyzer is measured by its ability to check the analyzer calibration as recommended by the manufacturer. Therefore, each system must include provisions for testing and calibration. As is shown in Figure 8.2f, a means of isolating the inlet is needed in order to allow a calibration sample to be introduced manually or automatically.

Also necessary is a suitable calibration manifold with gas or liquid to furnish a reliable calibration sample to the analyzer.

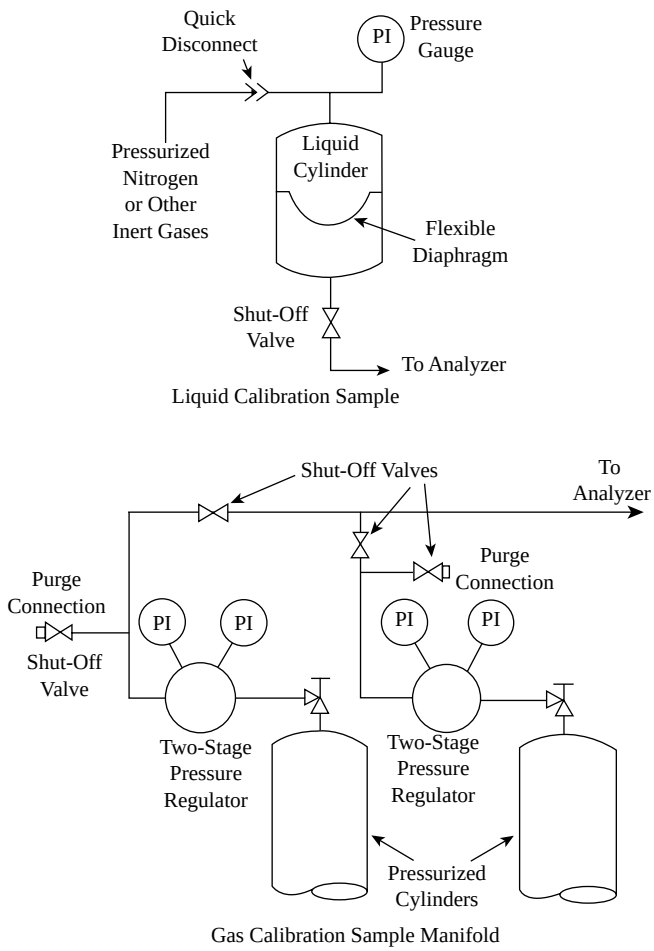

FIG. 8.2f
Calibration provisions for liquid.

© 2003 by Béla Lipták

Storage of the test sample may be a consideration, especially for unstable liquids or gases with low dew points. Treatment of the containers is very important for trace analysis samples. In all cases, the calibration provisions must be incorporated into the systems and a sample provided that is compatible with the desired stream composition and suitable for analysis by the analyzer used for the system. It is desirable, but not essential, that the calibration sample be introduced automatically from a remote location so that the instrument can be periodically checked; however, in most systems the introduction of the sample is done by manual switching at the analyzer.

COMPONENTS OF SAMPLING SYSTEMS

A number of devices are discussed here that are components of analyzer sampling systems. These devices include gas and liquid filters, bypass filters, liquid homogenizers, liquid grab sample collectors, chemical reactor sampling systems, and solids samplers. Later, under Applications, the various sampling probe packages and single-stream and multistream process sampling systems are described.

The more components there are in a sampling system, the less reliable it is likely to be. The mean time between failure and maintenance needs of the overall system will improve as the number of pumps, ejectors, regulating valves, coolers, heaters, filters, coalescers, dryers, knockout traps, manifolds, timers, and other components that comprise the system are reduced.

Selecting the System Components

Sampling systems require certain components, which are commercially available. One source is the analyzer's manufacturer, who through the years has developed systems compatible with its analyzer, such as filter coalescers, condensers, and washing and treating systems.

A second source is the analyzer systems vendor, who had designed special components, such as kinetic separators, filter probes, and the like, for use with analyzers for applications in rather hard service.

A third source is the specialty vendor, who has developed unique sampling components, such as pyrolysis gas sample conditioners; permeation devices for water removal systems; high-efficiency, self-cleaning filters; and so on. It is desirable to check whether specialty items are available before trying to design new components. Most of the specialty components have taken years of field testing to develop and modify for successful application.

When a large number of analyzers are used, the components selected must be of the same type and manufacture for interchangeability and stocking of spare parts. Documenting a sample system with complete flow schematics, part identification, and manufacturing of various components is an essential part of being able to properly start up a system and maintain it successfully over a long period.

The successful design of sample systems requires careful analysis of the physical and chemical conditions of the stream, as well as serious consideration of the ambient and transport conditions, to ensure integrity of the sample. Therefore, care should be taken in evaluating the above considerations with respect to a given stream and in applying the correct analyzer to provide the desired measurement.

Sample system design is based on experience, and whenever possible, previous experience should be given prime consideration in the selection and application of components. A successful sample system normally results in a successful analyzer system. Therefore, no effort must be spared in proper sample systems design, which requires a careful selection of the system components. These are discussed below, starting with filters.

Filter Designs

Most analyzer sampling systems will include a filter with at least one wire mesh strainer (100 mesh or finer) to remove larger particles that might cause plugging. Available filter materials include cellulose, which should only be considered in applications where it does not absorb components of interest. Sintered metallic filters can remove particles as fine as 2 microns; cellulose filters can remove down to 3 microns; and ceramic or porous metallic elements can trap particles of 13 microns or larger. When the solids content is high, two filters can be installed in parallel, with isolation valves on each. Motorized self-cleaning filters are also available for such services.

Separating Liquids from Gases Glass microfiber filter tubes efficiently separate suspended liquids from gases. The filter tubes capture the fine droplets suspended in the gas and cause the droplets to run together to form large drops within the depth of the filter tube. The large droplets are then forced by the gas flow to the downstream surface of the filter tube, from which the liquid drains by gravity. This process is called coalescing.[1]

The coalesced liquid drains from the tubes at the same rate as liquid droplets enter the tubes. Therefore, the tubes have an unlimited life when coalescing liquids from relatively clean gases. The filters operate at their initial retention efficiency even when wet with liquid. The flow direction is inside to outside to permit the liquid to drip from the outside of the filter to the housing drain (Figure 8.2g).

The filter tube grade should be selected for maximum liquid drainage rate, rather than maximum filtration efficiency rating, because a liquid drainage rate decreases with increasing filtration efficiency rating. If liquid is carried into the filter in slugs rather than dispersed as droplets in the gas, a filter that is properly sized for steady-state conditions can be flooded and permit liquid carryover. If slugging of liquid is expected, a filter with a relatively large bowl should be selected to provide adequate liquid-holding capacity, and provisions

© 2003 by Béla Lipták

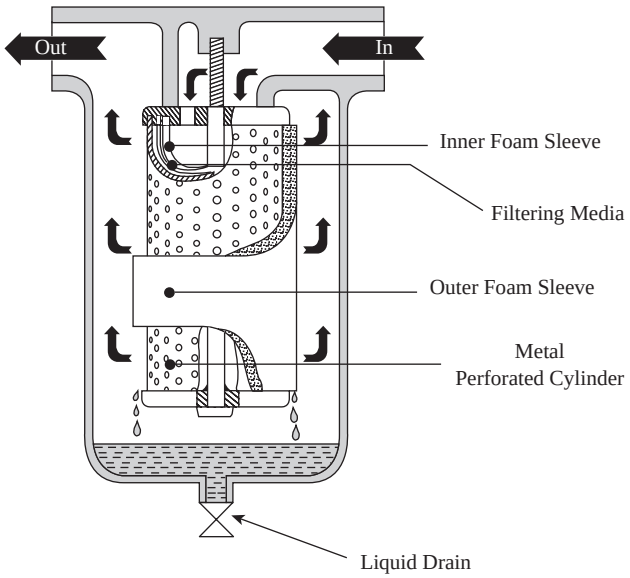

FIG. 8.2g
Coalescing gas filter serves to remove liquid entrainment. (Courtesy of Parker Filtration, formerly Balston Inc.)

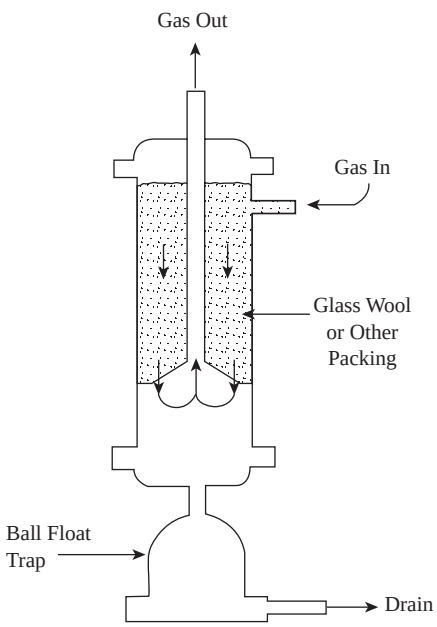

FIG. 8.2h
Entrained liquid separator with ball float trap.[2]

should be made to drain the liquid automatically from the bowl of the housing as it accumulates.

An automatic float drain can be used if the pressure is in the 10- to 400-psig (28 bars) range. Above 400 psig, which is the upper limit for commercially available float drains (Figure 8.2h), the possibilities are 1) a constant bleed drain, 2) a valve with an automatic timed actuator, or 3) an external reservoir with manual valves. The external reservoir can be constructed of pipe or tubing with sufficient volume to hold

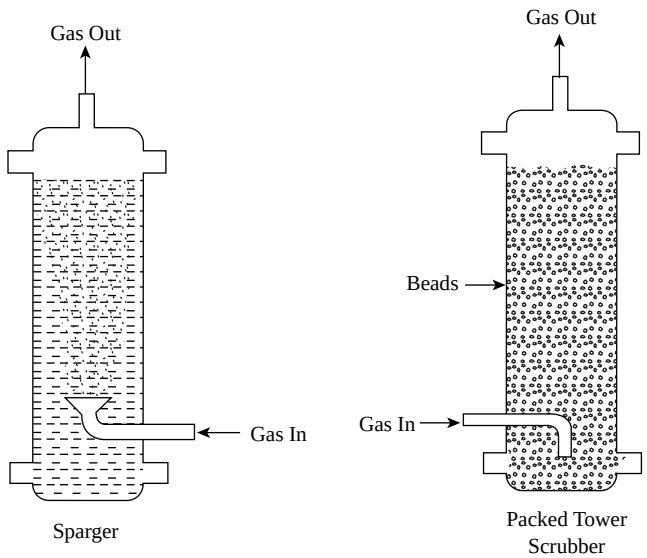

FIG. 8.2i
Removal of corrosive gases or of condensable vapors.[2]

all the liquid that is expected to be collected during any period of unattended operation. To drain liquid while the filter is operating at pressure or vacuum conditions, the reservoir inlet valve is closed and the outlet valve is opened.

If the filter is under vacuum, the external reservoir is a practical method of collecting coalesced liquid for periodic manual draining. Alternatively, if an external vacuum source is available, such as an aspirator, the liquid may be drained continuously from the housing drain port.

Spargers, Packed Towers, and Strippers In some analyzer applications it is necessary to remove corrosive gases or condensable vapors from the sample. This removal can be done by bubbling the sample stream through a liquid solution.

In the case of a sparger (Figure 8.2i), the gas enters below the scrubbing medium through a sintered disc, which breaks it into small bubbles. This increases the liquid–gas contact surface area and thereby provides improved scrubbing efficiency. At the same time, the small bubbles also increase the tendency for foaming and liquid carryover, and therefore the sample flow velocities should be kept low.

Packed towers (Figure 8.2i) can also be used as scrubbers. In these designs the gas sample bubbles up through a nonreactive packing of beads that are wetted by a liquid solution. Foaming and liquid carryover are problems in packed towers, as in a sparger.

When the impurities in the process gas stream are both solids and liquids, such as in particulate matter and mist—carryover problems in chlorine plants—the fiber mist eliminator[3] (Figure 8.2j) should be considered. The liquid particles form a film on the fiber surface, and the drag of the gas moves this film and the dissolved solids radially, while gravity causes them to move downward, resulting in a self-cleaning action.

© 2003 by Béla Lipták

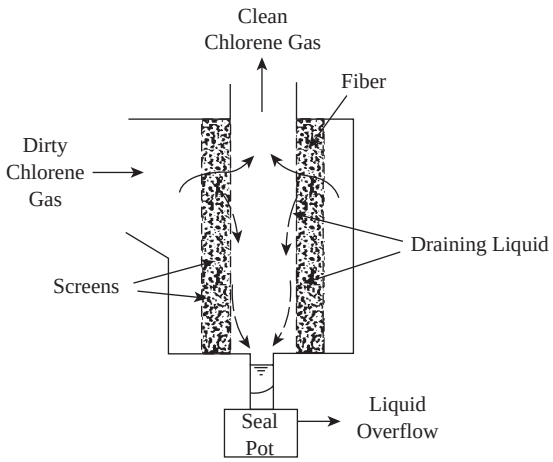

FIG. 8.2j
Fiber mist eliminator.

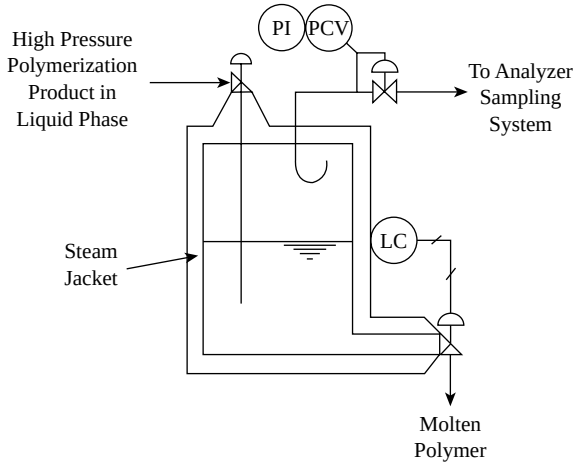

FIG. 8.2l
Flash chamber makes the analysis of unreacted monomers possible.

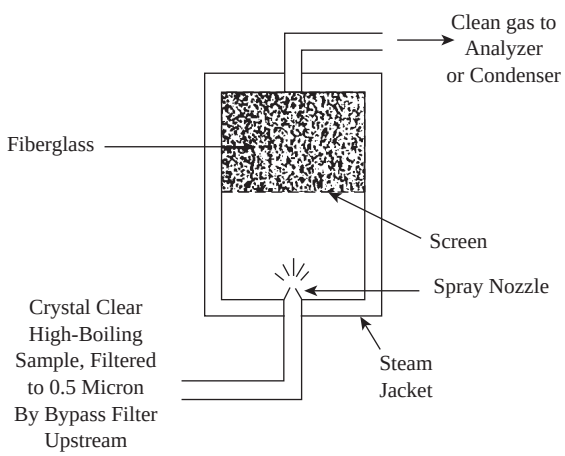

FIG. 8.2k
When dissolved inorganic solids or polymer-forming compounds are present, stripping the liquid sample may be the answer.

Dissolved solids or polymer-forming compounds in a process stream would leave a residue and eventually plug the liquid sample valve. The logical solution is to force the residue formation to take place in a controlled area, such as in the fiberglass filter of the spray-stripping chamber shown in Figure 8.2k.

If polymers represent a substantial portion of the process stream, the need for filter replacements becomes excessive and therefore impractical. A better technique is to vaporize the unreacted monomers through pressure reduction while keeping the polymers in a molten state through heating. This technique (Figure 8.2l) not only discharges polymers continuously, but also provides a usable vapor sample.

When it is necessary to clean the windows on the various photometers operating on gas samples, a warm air purge can be used, keeping the window compartment isolated from the sample.

Separating Two Liquid Phases Theoretically, glass microfiber filter tubes can separate suspended droplets of a liquid that are immiscible in another liquid using the same process by which they separate droplets of liquid from a gas. The liquid droplets suspended in the continuous liquid phase are trapped on the fibers and run together to form large drops, which are then forced through the filter to the downstream surface. The large drops separate from the continuous liquid phase by gravity difference, settling if heavier than the continuous phase and rising if lighter. The coalescing action of glass microfiber filters is effective with aqueous droplets suspended in oil or other hydrocarbons, and also with oil-in-water suspensions.

In practice, however, liquid–liquid separations are much more difficult to achieve than are liquid–gas separations. The specific gravity difference between two liquids is always less than that between a liquid and a gas and, therefore, a longer phase separation time is needed. Either the filter housing must be oversized or the flow rate greatly reduced to avoid carryover of the coalesced phase.

As a rule of thumb, flow rate for liquid–liquid separation should be no more than one fifth the flow rate for solid–liquid separation. Even at low flow rates, if the specific gravity difference between the two liquids is less than 0.1 U (for example, if an oil suspended in water has a specific gravity between 0.9 and 1.1), the separation time for the coalesced phase may be too long to be practical. In that case, if there is only a small quantity of suspended liquid, the filter tube can be used until saturated with suspended liquid and then changed.

Another practical problem with liquid–liquid separation is that small quantities of impurities can act as surface-active agents and interfere with the coalescing action. For this reason, it is not possible to predict accurately the performance of a liquid–liquid coalescing filter, and each system must be tested on-site. Testing can be started with 25-micron filter tubes and with inside-out flows at very low flow rates. If the

© 2003 by Béla Lipták

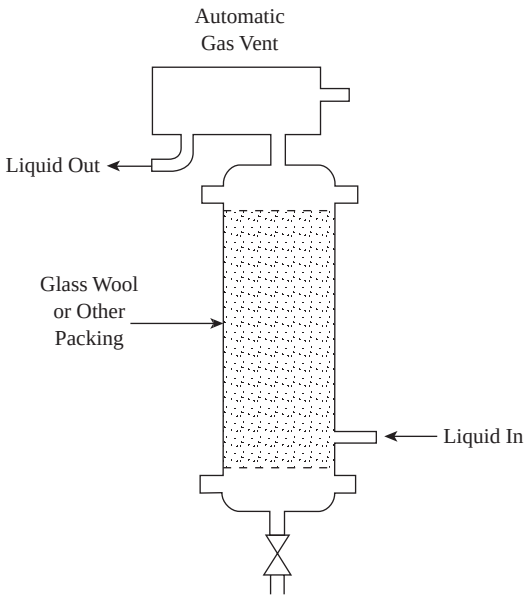

FIG. 8.2m
Entrained gas separator.[2]

suspended liquid is lighter than the continuous phase, the housing should be oriented so that the drain port is up.

Removing Gas Bubbles from Liquids Glass microfiber filter tubes readily remove suspended gas bubbles from liquid, eliminating the need for deaeration tanks, baffles, or other separation devices. Flow direction through the filter is outside to inside, and the separated gas bubbles rise to the top of the housing and are vented through the drain port. If slipstream sampling is used, the separated bubbles are swept out of the housing with the bypassed liquid. Filter tubes rated at 25 microns are a good choice for gas bubble separation.

Columns with glass wool packing can also be used to remove entrained bubbles (Figure 8.2m). Here the gas bubbles collect and agglomerate on the packing and form large bubbles. These bubbles break away and rise to the top, where they are separated from the liquid and vented.

Slipstream and Bypass Filters In order to minimize the transportation lag, a relatively large slipstream is usually taken from the process and brought near the analyzer. As the actual sample flow to the analyzer is small, only a small portion of this slipstream is sent to the analyzer; the bulk is returned to the process (Figure 8.2n). This arrangement permits the main volume of the filter to be swept continuously by the high-flow-rate system, thus minimizing lag time; at the same time, only the low-flow stream to the analyzer is filtered, thus maximizing filter life.

A slipstream filter requires that its inlet-to-outlet ports be located at opposite ends of the filter element to allow the high flow rate of the bypassed material to sweep the surface of the filter element. A third port connecting the low-flow-rate lines to the analyzer allows filtered samples to be withdrawn from the filter reservoir.

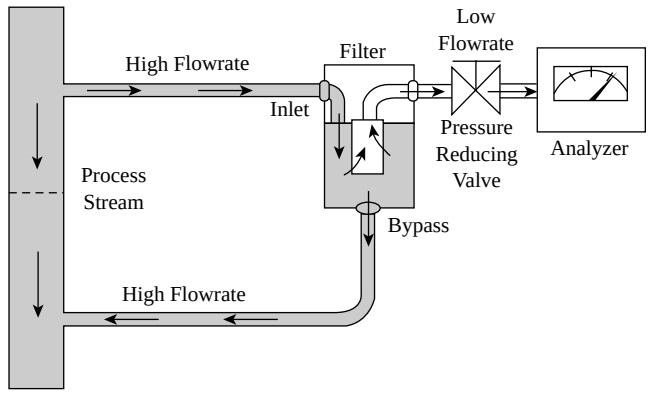

FIG. 8.2n
Slipstream or bypass filtration.

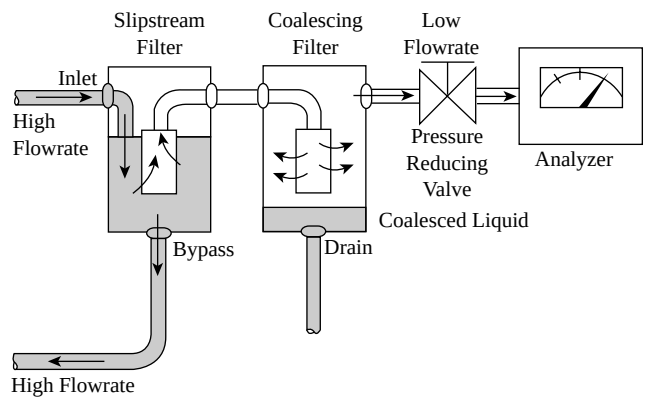

FIG. 8.2o
Slipstream plus coalescing filtration.

If bubble removal from a liquid is a requirement, this function may be combined with slipstream filtration, since the recommended flow direction for bubble removal is outside to inside, and the separated bubbles will be swept out of the housing by the bypass stream. In this case, the liquid feed should enter at the bottom of the housing and the bypass liquid should exit at the top of the housing.

A special problem arises in slipstream sampling if the filter is to coalesce and continuously drain suspended liquid from a gas stream or to coalesce liquid droplets from a liquid stream. The coalescing filter requires two outlet ports, one for the dry gas and one for the liquid drain. To combine coalescing and slipstream filtration, a filter housing would need four ports—two for inlet and bypass and two for filtered gas and coalesced liquid—which is not a practical design.

Therefore, slipstreaming plus coalescing requires two stages of filtration (Figure 8.2o). The second (coalescing) stage must be located in the sample line into the analyzer and should be as small as possible to minimize lag time. If the quantity of suspended liquid is not large, a miniature inline disposable filter unit may be used as a trap for the suspended liquid, to be replaced when saturated.

© 2003 by Béla Lipták

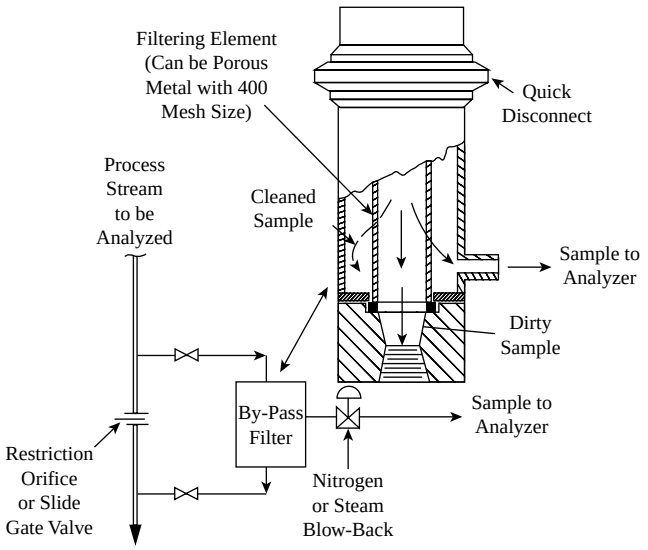

FIG. 8.2p
Self-cleaning bypass filter and its installation.

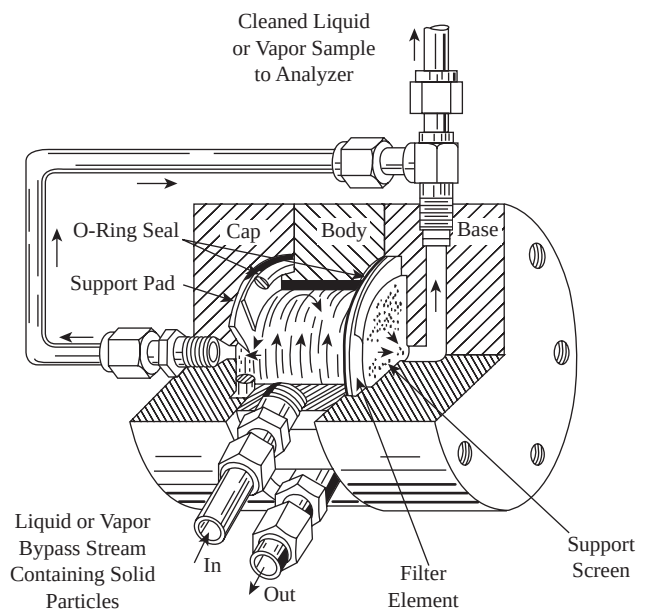

FIG. 8.2q
Bypass filter with its cleaning action amplified by the swirling of the tangentially entering sample.

Self-Cleaning and Rotary Disc Filters If the material to be removed is dust, the self-cleaning bypass filter (Figure 8.2p) with automatic blow-back constitutes a potential solution. In some instances, cyclone separators should be considered. In the latter device (Figure 8.2q), the process stream enters tangentially to provide a swirling action, and the cleaned sample is taken near the center. Transportation lag can be kept to less than 1 min, and the unit is applicable to both gas and liquid samples. This type of centrifuge can also separate streams by gravity into their aqueous and organic constituents.

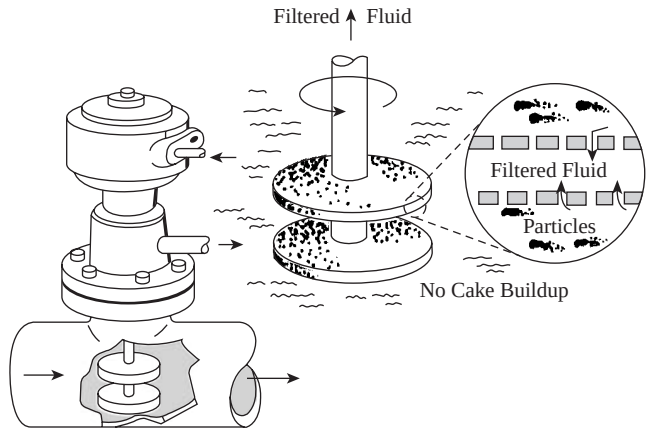

FIG. 8.2r
Rotary disc filter.

Another good filter design is the rotary disc filter (Figure 8.2r). Here the filtered liquid enters through the small pores in the self-cleaning disc surfaces. The sample liquid is drawn by the sample pump through the hollow shaft and is transported to the analyzer.

For the removal of small amounts of polymer dust in vapor samples, there are melt filters with removable, heated metallic surfaces that melt and collect the polymer dust from the sample.

Liquid analyzer sample streams usually have a high solids content. In addition, the analyzers are often located in remote areas of the plant and are infrequently serviced. Therefore, the sample filter system must have a long life between filter tube changes even when solid loading is high. The recommendation for this type of application is a two-stage filter system, a 75-micron prefilter followed by a 25-micron final filter. The filters should be oversized as much as possible without causing excessive lag time. Plastic filter housings are usually a good choice.

Keeping Probes Clean

Figure 8.1p illustrates one of the probe cleaner designs, and Table 8.1q lists the features and capabilities of a number of probe cleaners. There is yet another approach to keeping probes clean, which grew out of the mining industry, where gypsum buildup on pH and oxidation–reduction potential (ORP) probes was blinding these sensors.

The Filterate Master (Figure 8.2s) consists of a filter cup at the tip of a 2-in.-(50-mm)-diameter standpipe, which is inserted into the process. The pH or other electrode is inside this cup, which is made out of porous sintered stainless steel. A pump housed outside the process draws a vacuum inside the cup, thereby drawing in the filtrate of the process fluid. The excess filtrate can be continuously returned by the pump, while the filtered-out solids accumulate on the outside surface of the filter cup.

Operating experience shows that solids can build up to over an inch (25 mm) thickness without blocking the filtrate flow. The timer is set to periodically reverse the filtrate pump.

© 2003 by Béla Lipták

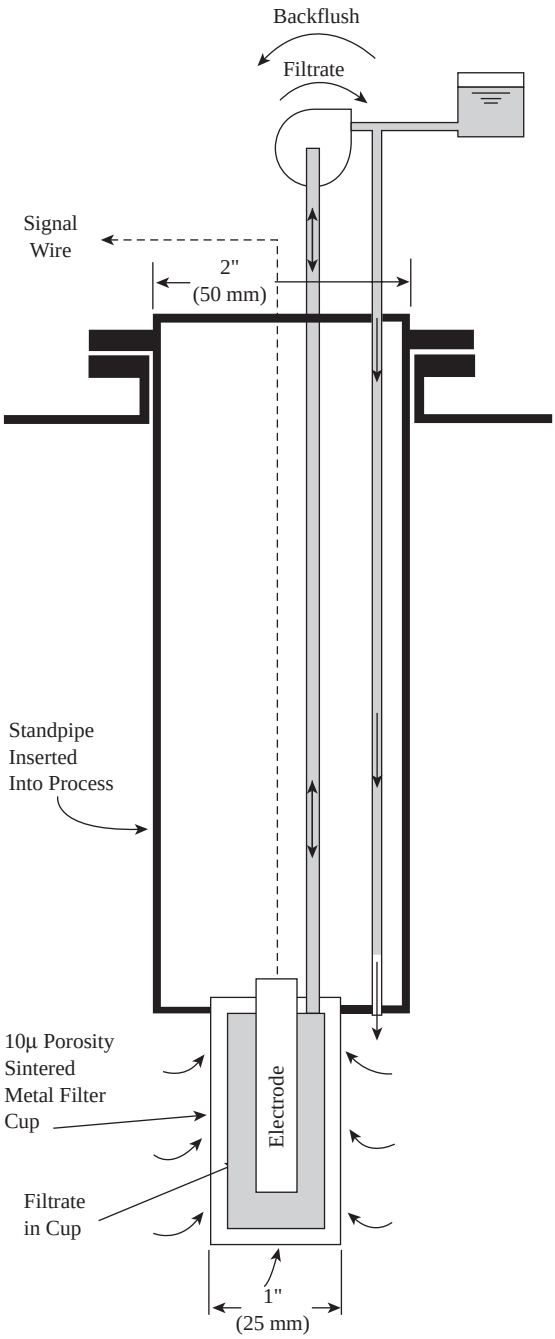

FIG. 8.2s
Electrode is protected from material buildup by back-flushed porous filter cup. (Courtesy of TBI-Bailey Controls.)

When the flow direction is reversed, the filtrate flows back into the filter cup and out through the porous filter. During back-flush, the buildup is quickly removed and another filtering cycle is initiated automatically.

Homogenizers

A frequent problem of sampling systems is plugging. There are two ways to eliminate it. The older, more traditional approach is filtering. Unfortunately, as the filters remove materials that might otherwise plug the system, they also remove process constituents and make the sample less representative.

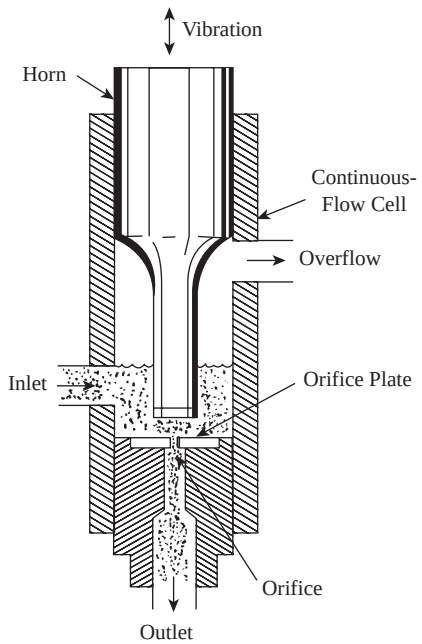

FIG. 8.2t
Ultrasonic homogenizer. (Courtesy of Cole-Parmer Instrument Co.)

The newer approach is to eliminate the potential for plugging by reducing the size of solid particles (homogenization) while maintaining the integrity of the sample. Thus, when a pulverizer is used to replace the filter, the sample becomes representative.

Homogenizers serve to disperse, disintegrate, and reduce the particle size of solids and thereby reduce agglomerates and liquefy the sample. Homogenizers can be mechanical, using rotor-stator-type disintegrator heads. In this design, the rotor acts as a centrifugal pump, which is recirculating the slurry while the shear, impact collision, and cavitation at the disintegrator head provide homogenization.

In ultrasonic homogenizers, high-frequency mechanical vibration is introduced into the probe (horn), which creates pressure waves as it vibrates in front of an orifice (Figure 8.2t). As the horn moves away, it creates large numbers of microscopic bubbles (cavities), and when it moves forward, these bubbles implode, producing powerful shearing action and agitation due to cavitation.

Such homogenizers are available with continuous-flow cells for flow rates up to 4 g/h (16 l/h) and can homogenize liquids to less than 0.1-micron particles sizes. The flow cell is made of stainless steel and can operate at sample pressures of up to 100 psig (7 bars).

Sample Conditioning

The extracted sample begins conditioning at the takeoff point, continues through the transport, and finishes conditioning at the analyzer location prior to entering the analyzer (Figure 8.2u).

© 2003 by Béla Lipták

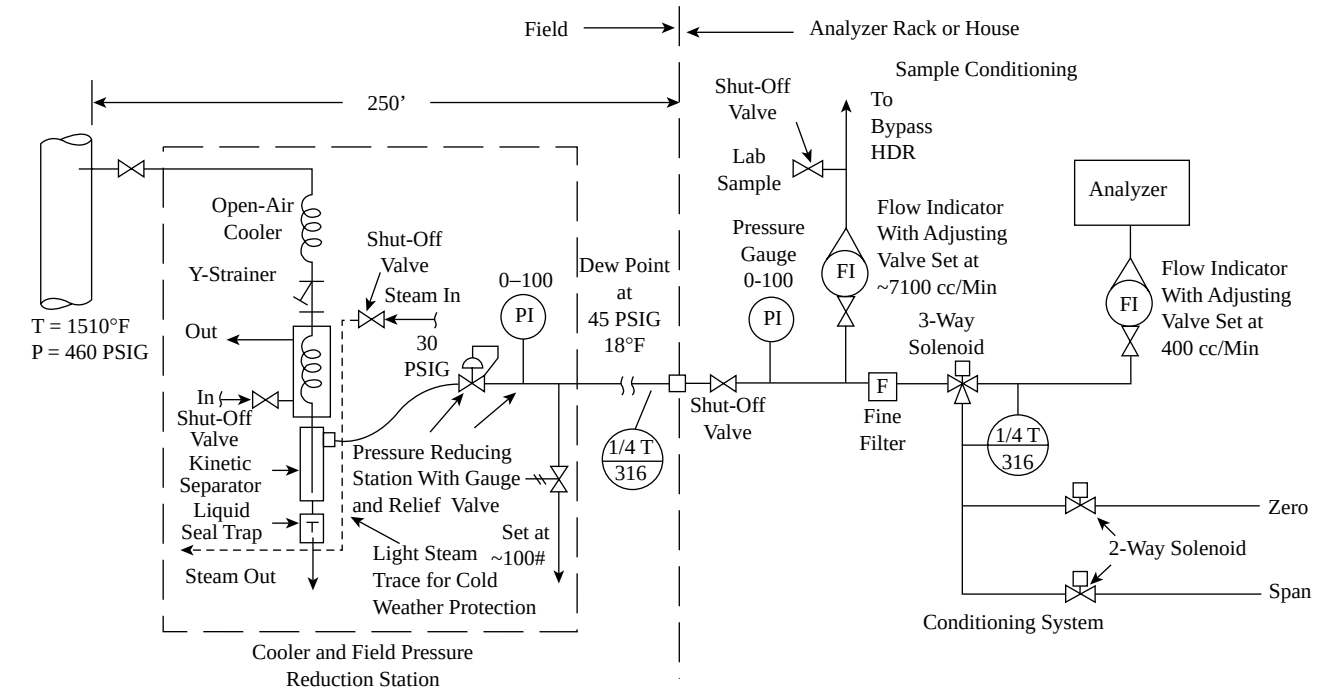

FIG. 8.2u
Typical sample conditioning system with remote preconditioning unit.

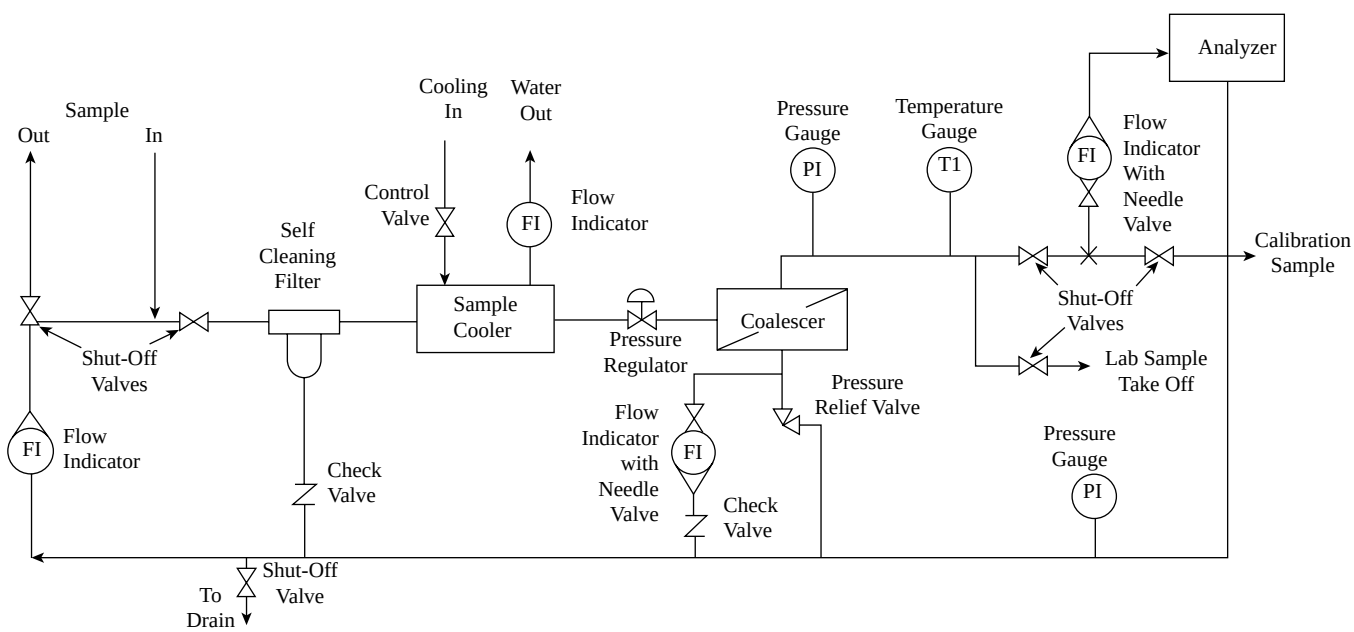

FIG. 8.2v
Typical liquid product sample system for refinery applications.

All samples require some form of conditioning to make them suitable for the analyzer and to assure reliable on-stream operation. The conditioning is done at the appropriate location in the sample system loop in order to maintain the integrity of the sample (Figure 8.2v).

Sample washing is usually limited to dirty, particle-laden streams whose composition will not be affected by the solubility of the components in the liquid used to wash the sample. The conditions of flow, temperatures, and pressures must be controlled to maintain a relatively constant predetermined relationship of the composition. When washing, care must be taken to keep the sample in the vapor phase by providing heated transport lines or by making provisions for final moisture removal as the analyzer may require.

© 2003 by Béla Lipták

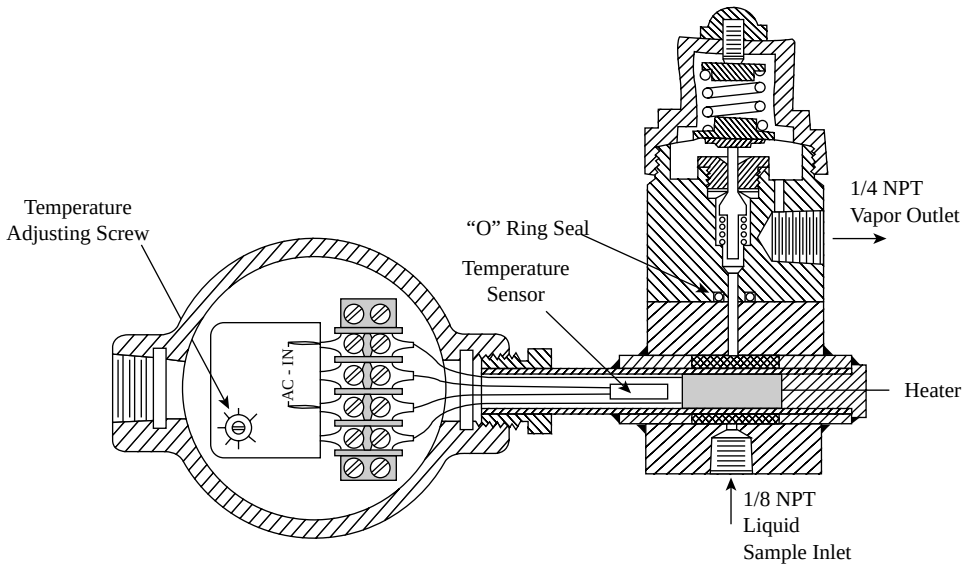

FIG. 8.2w
Vaporizing regulator assembly (electrically heated).

Vaporizing Samples Vaporizing is frequently necessary for equilibrium liquids or when the analyzer requires it. The vaporization is usually done by a vaporizer regulator (Figure 8.2w). In such a regulator the sample is vaporized simply by pressure reduction across a capillary or, more often, by using a heater as well. Care must be exercised to avoid partial vaporization and fractionation by selecting a suitably heated vaporizing regulator to accommodate the sample.

Entrainment Removal The removal of entrainment from liquid or gas samples normally starts with locating a sample tap and providing a sample probe at the takeoff point. Filtration is normally used for both gases and liquids, because it removes both liquid and particulate entrainment from gases and particulate matter from liquids.

For gases requiring further conditioning of heavy loading, cyclone filters can be used if the sample has adequate velocity. For liquids, coalescers are frequently used to remove both undesirable gases and liquids by gravity. The removal of free water from a hydrocarbon stream is usually accomplished by passing the liquid through a hydrophilic element, causing the water droplets to accumulate on the element. The hydrocarbon stream is then passed through a hydrophobic element that rejects the water, removing it from the bottom with a hydrocarbon bypass stream.

Another method of removing moisture from a stream uses a selective permeation device with a drying medium that creates differential pressures to drive the water through the permeable materials, thus removing it from the flowing stream (Figure 8.2x).

Selection of Component Materials Adsorption of the sample components of interest on the walls or surface with which the sample comes in contact will affect the analysis, especially

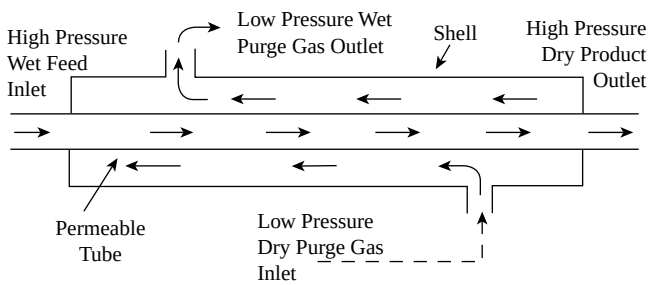

FIG. 8.2x
Permeable tube sample dryer.

for measurements in the parts per million (ppm) range. Therefore, proper selection of materials and conditioning is essential for establishing an equilibrium that will make analysis reliable.

Specifically, water vapor samples reach equilibrium more rapidly in stainless steel lines than in copper or plastic tubing. Diffusion is another consideration. Samples system design should assure that gases do not permeate the walls of the sample system. This is especially important in high-pressure systems and ppm analysis. Another problem with diffusion is leakage, which can change the sample composition because gas molecules will flow in both directions of the leak and can significantly affect ppm analysis. This is best illustrated by the fact that in an oxygen ppm analyzer system, the slightest leak will create a full-scale reading on the instrument even though the leak is from a high-pressure sample to atmospheric pressure.

Some sample streams may contain corrosive gases or water vapor that influence the accuracy of the measurements or potentially damage the analyzer. Removal of such undesirable matter or components can be accomplished by passing

© 2003 by Béla Lipták

the sample through a packed bed of soil chemicals or desiccant. Further, a liquid treating agent may be applied with provisions that gas streams be broken up into small bubbles to assure proper contact between the liquid and gas phases. Care should be taken in such systems to avoid alteration of the sample and to condition the sample to a desired and reproducible form for analysis.

APPLICATIONS

Here a brief discussion will follow of the various sample probe and sampling system package designs that are used for gas, liquid, and solids sampling. The discussion will also cover the more special cases of stack, reactor, condensate, trace component, and multiple-stream sampling systems.

Gas Sampling Probes

When taking gas samples, the goal is to obtain representative samples with minimum time lag, using short, small-volume sampling lines. Whenever possible, it is preferred to draw dry and clean samples in order to minimize the need for filters, dryers, knockout traps, or steam tracing.

The sample tap should be located on the side of the pipeline to minimize liquid or dirt entrainment, and the sample should be taken from the center of the pipe. If it is necessary to periodically remove the probe for cleaning or to perform a sampling traverse, it is desirable that the probe be inserted through a packing gland and block valve, as shown in Figure 8.2y.

The volume of the sampling system should be kept to a minimum, while the velocities through the sample lines should be high to protect against the settling of entrained liquids or particulates that can cause plugging. Sample line tubing can be small as 1/8 in. (3 mm) in diameter, and sample flow velocities should be between 5 and 10 ft/sec (1.5 to 3 m/sec). When the sample is taken from a combustion zone or other *dirty* processes, a filter is usually provided at the tip of the sample probe, and a high-pressure filter blow-back line is provided for periodic filter cleaning (Figure 8.2z).

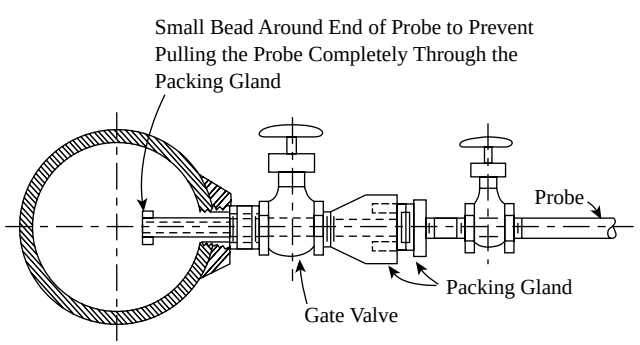

FIG. 8.2y
Gas sampling probe should be inserted from the side of the pipe to near the center of the pipe.[2]

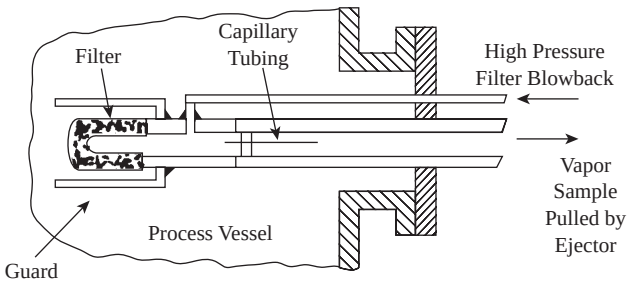

FIG. 8.2z
Gas sampling probes used on combustion processes are usually provided with probe-tip filters and blow-back lines for filter cleaning.

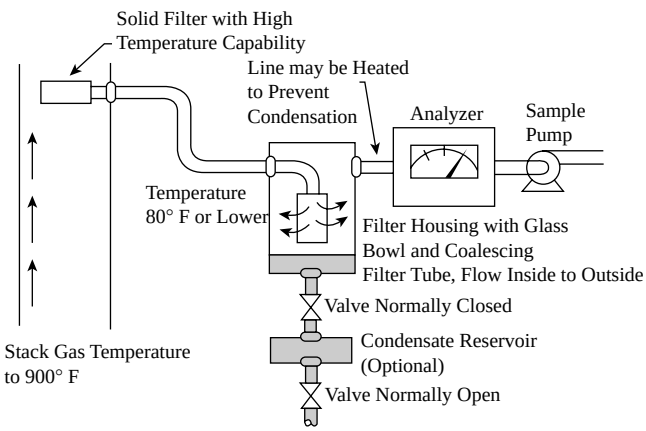

FIG. 8.2aa
Stack gas sampling.

Stack Gas Sampling

When sampling hot, wet stack gas, a filter capable of withstanding the gas temperature should be installed in the stack at the tip of the sample line to prevent solids from entering the gas sample line. After the sample is cooled, a coalescing filter is used to remove suspended liquids before the sample goes to the analyzer (Figure 8.2aa).

The sample flow direction is from inside to outside. Filter housings with Pyrex glass bowls are often used in this application to permit visual check of the liquid level in the filter housing. Since there is often a considerable amount of liquid present in the sample, steps must be taken to drain the housing to ensure that liquid does not build up and carry downstream to the analyzer.

The liquid coalescing filter should be located as close to the analyzer as possible to minimize the chance of condensation between the filter and the analyzer. Additional precautions that can be taken to avoid downstream condensation are to cool the sample below ambient temperature upstream of the coalescing filter and to heat the line gently between the filter and the analyzer.

Automatic Stack Sampling In these sampling packages, a microprocessor directs the automatic sampling method, which can be selected to follow U.S. Environmental Protection

© 2003 by Béla Lipták

Agency (EPA) Methods 1 to 6, 8, 17, and 23 or international methods specified by VDI, BS, or ISO. The microprocessor stores all measurements, reviews and diagnoses all inputs, controls the required parameters, calculates isokinetic conditions, and either reports the results in a printed form or transfers them to a floppy disc.

Besides the controller, such a package usually consists of a probe, a filter (hot) box, a cold box, a flexible sample line, glassware, a node box, and a monorail system. The probe is usually 3, 5, 7, or 10 ft (0.9, 1.5, 2.1, or 3 m) and made of stainless steel with a glass liner. Most probes are jacket heated and are provided with both a liner thermocouple and a stack temperature thermocouple.

The measured variables include the temperatures of the stack, probe liner, filter box, condenser outlet, and the dry gas meter. The pressures are detected by an absolute and a differential pressure transducer and are used to measure the pressure of the stack gas, the barometric pressure, and the velocity pressure of the stack gas. The normal capacity of the vacuum pump that draws the sample is 0.75 CFM (21 l/min), and the dry gas meter has an operating range of 0.1 to 1.5 CFM (2.8 to 42 l/min).

The node box provides the interface between the filter box and the cold box by measuring the temperatures in both. It measures and stores the temperature, pressure, and velocity in the stack. The monorail eliminates the need for bulky supports.

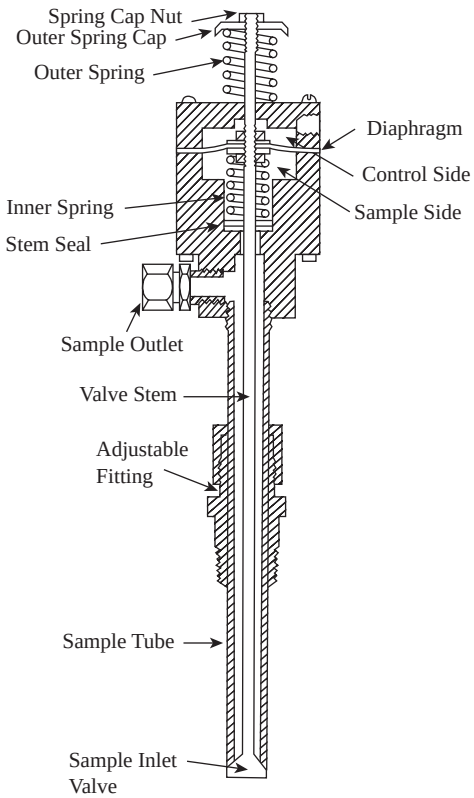

FIG. 8.2cc
Adjustable automatic load sampler.

Automatic Liquid Samplers

Automatic liquid samplers collect intermittent samples from pressurized pipelines and deposit them in sample containers. The sample can be collected on a time-proportional or on a flow-proportional basis. Figure 8.2bb illustrates a sampler that withdraws a predetermined volume of sample every time the actuator piston is stroked. In the time-proportional mode, this sampling frequency is constant, while in the flow-proportional mode, this unit would vary the sampling frequency as a function of flow.

In some automatic liquid samplers, the sampling frequency is adjusted by pneumatic pulse relays or by electronic controls (Figure 8.2cc). Pulse duration is usually adjustable from 0.25 sec to 1 min, while pulse frequency can be adjusted from a few seconds to up to an hour. The intermittent in-line sampler illustrated in Figure 8.2cc can take samples at pressure up to 1500 psig (105 bars).

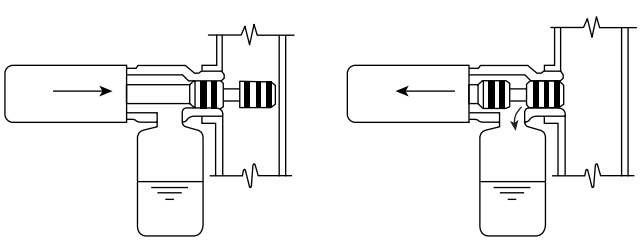

FIG. 8.2bb
Intermittent collection of samples. (Courtesy of Bristol Equipment Co.)

Sampling of High-Pressure Condensate In high-pressure boiler systems, measurements of condensate conductivity, specific ion concentration, and feed-water additive concentrations are often required. In a continuous sampling system, the high-pressure steam or condensate is cooled below 100°F (38°C) and then reduced to near atmosphere pressure for metering to the analyzers. Filtration is required upstream of the pressure-reducing valves to prevent pitting to the valve seats by suspended particles and to eliminate variations in flow rate to the analyzers.

A stainless steel filter housing with the appropriate pressure rating and 25-micron filter tube is recommended. Since the analyzer system is often located some distance from the sampling point, slipstream filtration is usually required. Figure 8.2dd shows a sampling system in operation at a steam generation facility.

Chemical Reactor Samplers When samples are taken from chemical reactors by opening manholes, the operators can be exposed to dangerous fumes while the product can be degraded or cause explosions. To eliminate these problems, reactor sampling systems have been designed that allow the safe taking of samples.

© 2003 by Béla Lipták

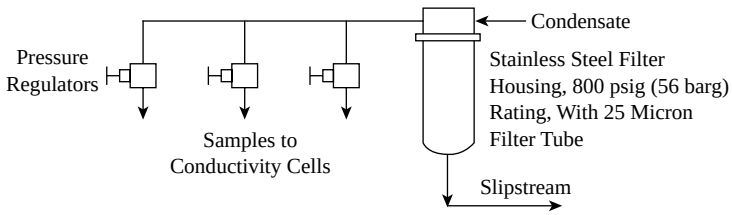

FIG. 8.2dd
High-pressure stream sampling.

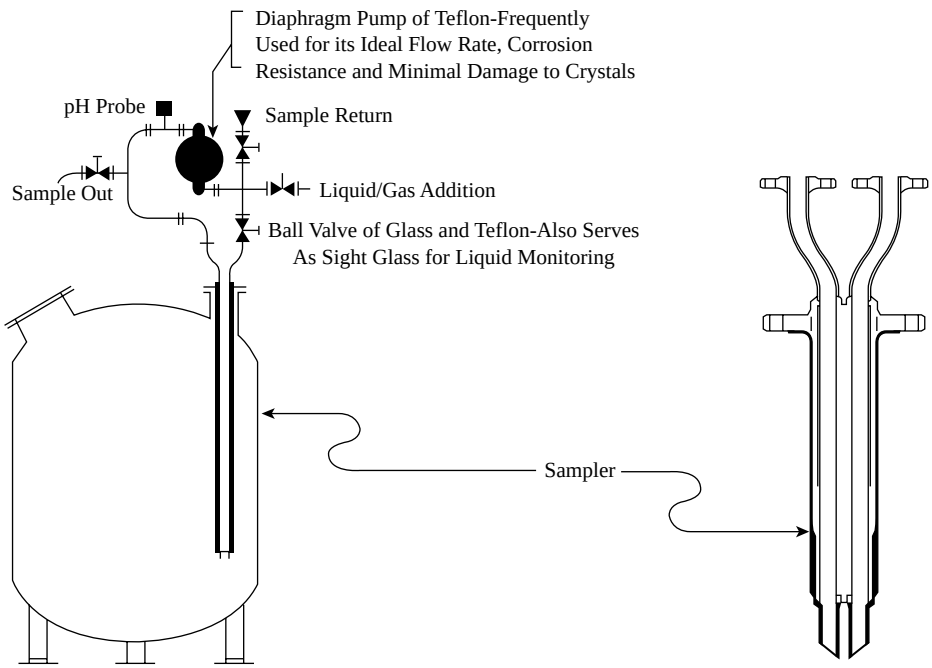

FIG. 8.2ee
Continuous or intermittent sampling of chemical reactor.[4]

The design illustrated in Figure 8.2ee requires only one nozzle (3 in. or 75 mm) and utilizes a Teflon-coated sampler assembly that can be used up to 150 psig (10.5 bars) and 350°F (177°C). For continuous sampling applications, such as for closed-loop pH control, a Teflon diaphragm pump is used to continuously return the analyzed sample.

Duckbill Samplers This sampler should be considered when liquid or sludge samples are to be collected at remote locations, from below the level in tanks, sewers, channels, sumps, lakes, or rivers.[5] As shown in Figure 8.2ff, this device has no moving mechanical components, only a rubber (EPT, Buna-N, or Viton) bucket-shaped Duckbill®, which is inside a housing made of polyvinyl chloride (PVC), aluminum, or stainless steel. This rubber insert closes around fibers or particulate matter without jamming. It is operated by compressed air.

The sample enters by gravity through the bottom connected Duckbill inside the sampling chamber, which is installed below the process liquid (or sludge) level and traps some air at the top of the chamber as it fills with the process fluid. When a sample is required, compressed air is introduced, which closes the Duckbill inlet and discharges the sample from the bottom of the chamber. When a new sample is to be drawn into the sample chamber, the compressed air is vented and a new fill cycle is initiated.

An automatic controller is provided on which the user can adjust the frequency at which samples are to be taken into a composite sample collection bottle.

Solids Sampling

When solids in bins or silos need to be sampled, one of the various solids feeders (described in Section 2.23) can be considered. When solids are to be sampled while flowing by gravity or while pneumatically conveyed under the pressure, the choice of sampling devices becomes more limited. The screw-type solids sampler can be used on these applications

© 2003 by Béla Lipták

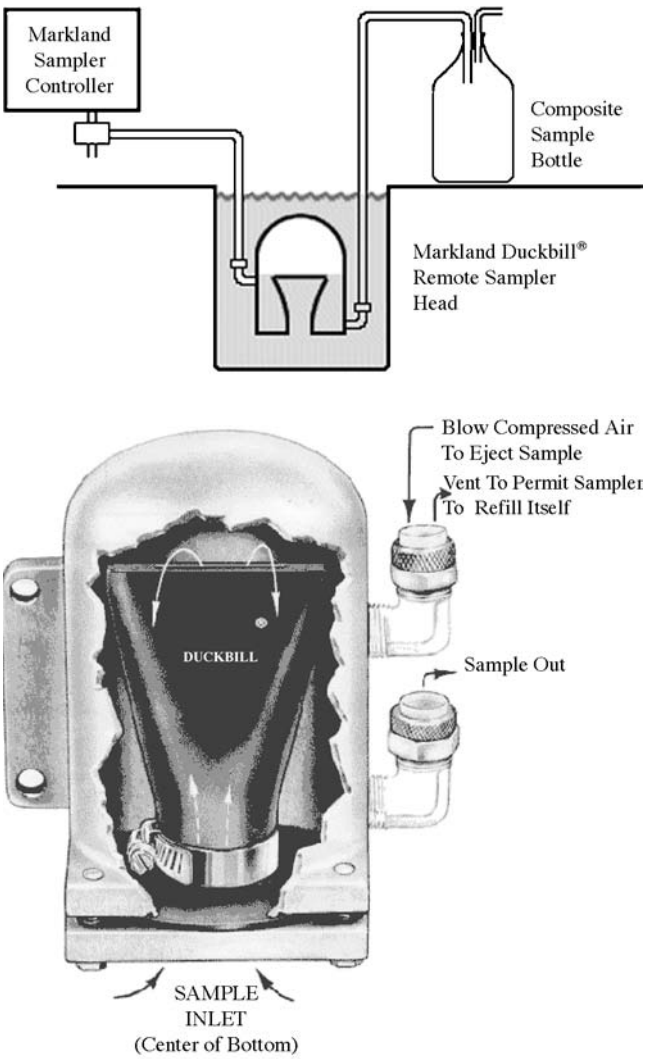

FIG. 8.2ff
Duckbill sampler. (Courtesy of Markland Specialty Engineering Ltd., www.sludgecontrols.com)

(Figure 8.2ff), but it is limited in the amount of pressure or vacuum it can seal against, and it does not provide an intermixed, representative sample. Screw samplers also introduce large transportation lags and cannot easily return the sample into the process.

An improved sampler design is described in Figure 8.2gg. This sampler can be sealed against small pressures or vacuums. It is operated by two actuators. During the sample collection phase, both actuators are extended into the process line. When a representative sample has been collected, it is withdrawn and simultaneously intermixed by pulling back actuator 1. As the analyzer is right above the withdrawn sample, the composition can be measured as soon as the sample has been taken. After analysis, actuator 1 is once again extended to return the old sample into the process. When it is time to take a new sample, actuator 2 is also extended and another sample is collected.

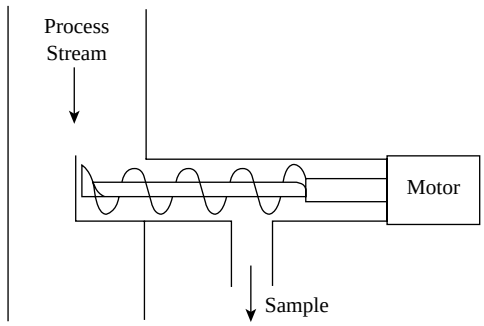

FIG. 8.2gg
Archimedian screw solid sampler.

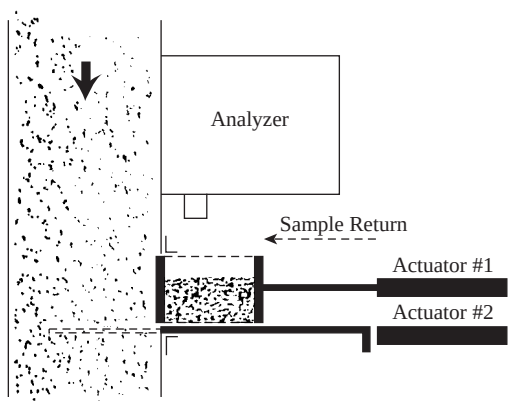

FIG. 8.2hh
The tray-type solids sampler.

Sampling Difficult Processes

An analyzer system enhances process control by providing specific measurement of physical or compositional data of a process or ambient condition. With the advent of computer technology, the need for such analysis has increased substantially to provide on-line data that the computers use to optimize process control. Some of these advances have also improved the handling of such difficult tasks as sampling for trace component analysis or sampling multiple streams.

Trace Analysis Sampling Trace analysis sampling systems necessitate more stringent requirements than normal analyzer sample systems because of contamination, adsorption, and desorption (Figure 8.2hh). Care should be taken in the selection of construction materials and proper applications of design criteria to avoid alteration of the sample. The following is a list of recommended practices for such systems:

1. Stainless steel seamless tubing is the preferred material because it provides inertness, smooth surfaces, and low porosity.
2. All components should be thoroughly cleaned of oil, gas, or other contaminating materials.
3. Dense fluorocarbons or other soft inert materials may be used as diaphragms as required.

© 2003 by Béla Lipták

4. Tubing sizes are critical, especially where low flows are used, because they limit the amount of increase in the adsorption–desorption phenomenon. A rule of thumb is to use the smallest possible tubing to achieve maximum flow to accommodate the sample loop design.
5. Packless shutoff valves with a diaphragm or bellows seals should be used; however, due to their high cost, serious consideration must be given to this area, and conventional valves are suitable for most applications.
6. Filtration of the sample in ppm analysis can create significant problems unless the filter is totally inert. Therefore, stainless steel filters using a high flow rate or dense fluorocarbon inert materials are recommended for such applications.
7. Conditioning of the lines and system to accommodate the ambient temperature requirements for preventing condensation of components of interest in the sample must be considered; if necessary, heat tracing of the lines must be furnished.
8. When it is necessary to provide an aid for transporting the sample from its sample point to the sample system through the analyzer, as is frequently done in ambient monitoring systems, a sample pump, ejector, or aspirator is necessary. In such cases, the pump must be a diaphragm. If practical, an ejector to pressurize the sample or an aspirator to aspirate it through the measuring device can be used. Both are more desirable than a sample pump.

Multistream Switching Multistream switching is usually used when it is practical to analyze several streams using one analyzer. However, because this system is more complex than single-stream sample conditioning, the following considerations should be reviewed to determine if multistreaming is feasible:

1. The potential problem of cross-contamination among multiple streams
2. The importance of each analysis and frequency of analysis
3. The loss of information from more than one analysis in case of analyzer failure
4. The cost of an additional analyzer vs. the cost of multistreaming
5. Maintenance requirements

After reviewing the above, one can decide if multistreaming is feasible and whether it should be manual or automatic. Whether manual or automatic, multistreaming requires good-quality valves for stream switching.

A typical multistream sampling system is shown in Figure 8.2ii. A common and important requirement in all such systems is that a continuous bypass be provided for each sampling point to avoid dead-end sample lines. The sample system should be laid out in such a manner that contamination between streams is avoided. This is best accomplished by arranging the solenoid valve in a double-block double-bleed configuration, which is rather expensive.

More often, a three-way solenoid valve is used for each stream, with the venting port always at low pressures to create a relief in case of a leak. To prevent contamination, dead

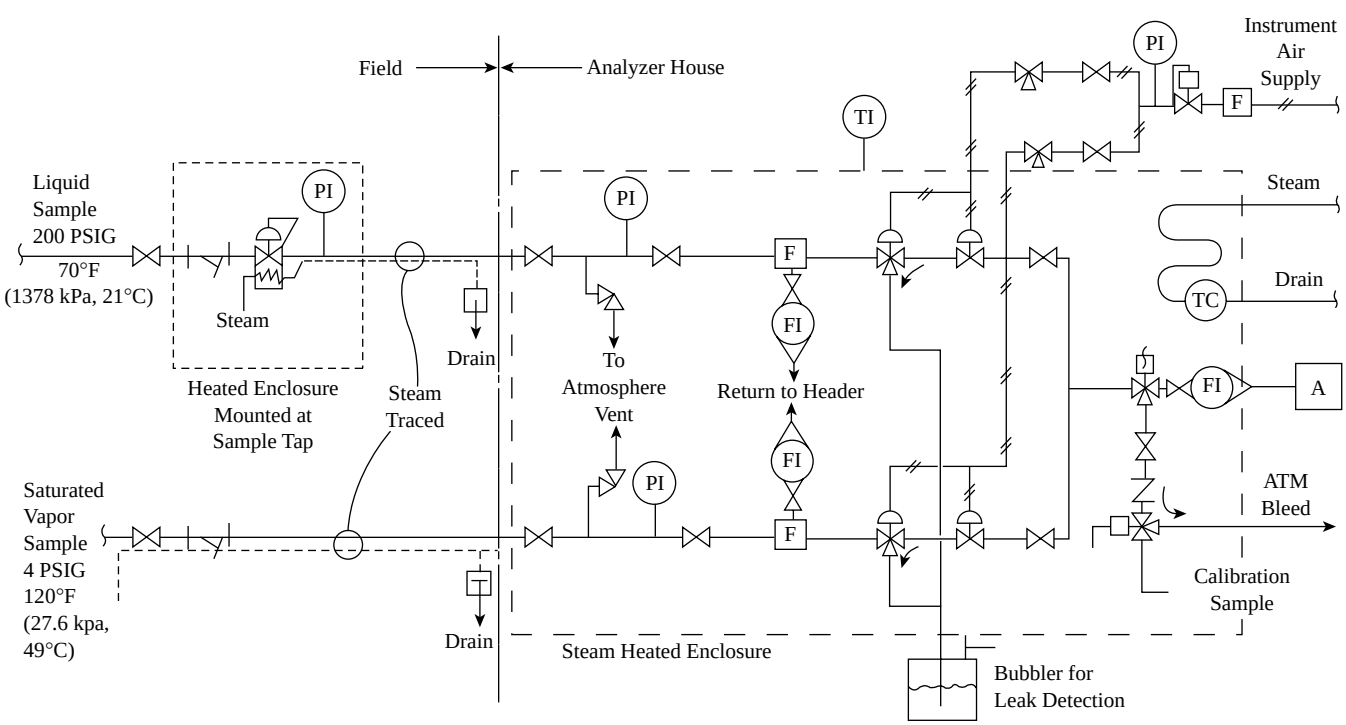

FIG. 8.2ii

Two-stream sampling system for trace analysis with a double-block, double-bleed configuration.

© 2003 by Béla Lipták

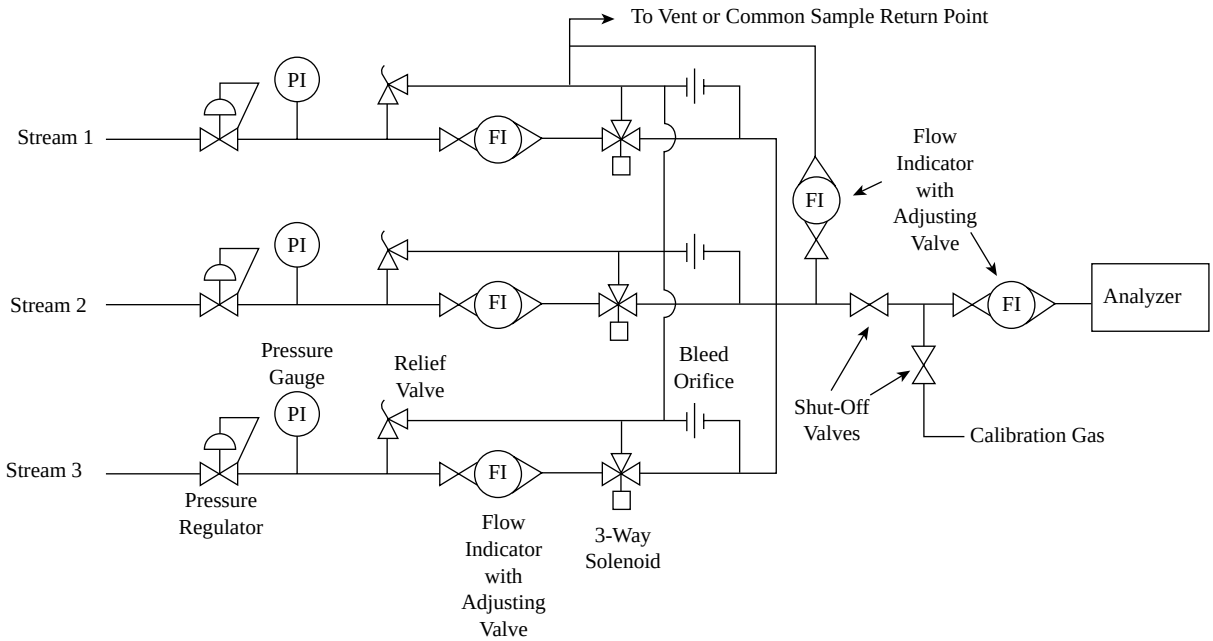

FIG. 8.2jj
Typical multistream automatic sampling system.

volume of the sample system should be considered, as well as equalization of the pressures upstream of the three-way valves. The problem is more severe in ppm sampling systems because of the adsorption–desorption effects, and careful consideration should be given to the design criteria described above.

References

1. Baker, G., Erk, G., Hudelson, J., Manka, D., Siebert, K., and Wachel, L., *Automated Stream Analysis for Process Control*, Vol. 2, Orlando, FL: Academic Press, 1984, pp. 97–101, 105–106.
2. American Petroleum Institute, API RP 550, Part II, "Process Stream Analyzers."
3. Nichols, J. H. and Brink, J. A., Jr., "Use of Fiber Mist Eliminators in Chlorine Plants," *Electrochemical Technology*, July–August 1964.
4. "System Samples Materials without Opening Manway," *Chemical Processing*, mid-November 1986.
5. www.sludgecontrols.com.

Bibliography

American Petroleum Institute, "Manual on Installation of Refinery Instruments and Control Systems: Part II—Process Stream Analyzers," latest edition.

Anderson, R., "Sample Pretreatment and Separation," 1987.

Clevett, K. J., *Handbook of Process Stream Analyzers*, Chichester, U.K.: Ellis Horwood, Ltd., latest edition.

Converse, J. G., "Calibration & Maintenance Are Part of a Reliable Sample Preparation Systems Design," ISA Conference, Houston, October 1992.

Cornish, D. C. et al., *Sampling Systems for Process Analyzers*, London: Butterworths, 1981.

Dubois, R. et al., *The New Sampling Initiative*, 47th Annual ISA Analysis Division Symposium, April 2002.

Dubois, R., van Vuuren, P., and Tatera, J., "New Sampling Sensor Initiative," An Enabling Technology, 47th Annual ISA Analysis Division Symposium, Denver, April 14–18, 2002.

Erk, G. F., "Engineering Analyzer Systems," *InTech*, August 1979.

Foundos, A. P., "Reliable Sample Conditioning Improves Process Analysis," *InTech*, January 1990.

Fussell, E., "Molding the Future of Process Analytical Sampling," *InTech*, August 2001, 32.

Houser, E. A., *Principles of Sample Handling and Sampling Systems Design for Process Analysis*, Pittsburgh, PA: Instrument Society of America, 1977.

Lodge, J. P., *Methods of Air Sampling and Analysis*, Chelsea, MI: Lewis Publishers, 1988.

McMahon, T. K., "The New Sampling/Sensor Initiative," *Control*, August 2001.

Meyers, R. A., *Encyclopedia of Analytical Chemistry: Instrumentation Applications*, New York: John Wiley & Sons, 2000.

Sherman, R. E., *Process Analyzer Sample-Conditioning System Technology*, New York: John Wiley & Sons, 2002.

Strauss, R., *Filtering Samples to On-Line Analyzers: Advanced Control and Instrumentation*, Houston, TX: Gulf Publishing Co., 1987.

Sugar, J. W. and Brubaker, J. H., "Sampling for Waste Water Analyzers," *InTech*, June 1973.

Van den Berg, F. W. J. et al., "Selection of Optimal Process Analyzers for Plant-Wide Monitoring," *Analytical Chemistry*, 74(13), 2002.

Webster, J. G., *The Measurement and Instrumentation and Sensors Handbook*, Boca Raton, FL: CRC Press, 1999.

Woodget, A. and Cooper, D., "Sample and Standards," 1987.

© 2003 by Béla Lipták

8.3 Analyzer Sampling: Stack Particulates

D. H. F. LIU (1982, 1995) **B. G. LIPTÁK** (2003)

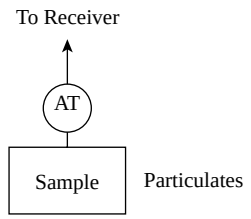

Flow Sheet Symbol

Types of Sample:	Gas-containing particulates
Standard Design Pressure:	Generally atmospheric or near atmospheric
Standard Design Temperature:	–25 to 1500°F (–32 to 815°C)
Sample Velocity:	400 to 10,000 ft (120 to 3000 m) per min
Materials of Construction:	316 or 304 stainless steel for pitot tubes; 316 or 304 stainless, quartz, or Incoloy for sample probes
Costs:	Probes only in 3- to 10-ft (1- to 3-m) lengths with glass, quartz, or stainless steel lining: from $1300 to $2500; $10,000 to $15,000 for a complete EPA particulate sampling system (Reference Method 5)
Partial List of Suppliers:	Bacharach, Inc. (www.bacharach-inc.com) Baldwin Environmental Products (www.bei-reno.com) MSA Instrument Div. (www.msanet.com) MGP Instruments (www.mgpi.com) Racwill Environment (www.pacwill.ca) Rupprecht & Patashnick Co. (www.rpco.com) Sensidyne, Inc. (www.sensidyne.com) Sierra Monitor Corp. (www.sierramonitor.com) Teledyne Analytical Instruments (www.teledyne-ai.com) Thermo Anderson (www.thermoandersen.com)

INTRODUCTION

Stack gas sampling has already been discussed in the previous section in connection with Figure 8.2aa. In this section the emphasis will be on particulate sampling, and in that connection, the topics of traverse point locations and pitot tube designs will be emphasized.

THE EPA PARTICULATE SAMPLING SYSTEM

A complete Environmental Protection Agency (EPA) particulate sampling system (Reference Method 5)[1–8] is comprised of four major subsystems:

1. A pitot tube probe or *pitobe* assembly for temperature and velocity measurements and for sampling
2. A two-module sampling unit that consists of a separate heated compartment with provision for a filter assembly, and a separate ice-bath compartment for the impinger train and bubblers
3. An operating–control unit with a vacuum pump and a standard dry gas meter
4. An integrated, modular umbilical cord that connects the sample unit and pitobe to the control unit

Figure 8.3a is a schematic of an EPA particulate sampling train (Method 5). As shown in the figure, the system can be readily adapted for sampling sulfur dioxide (SO_2), sulfur trioxide (SO_3), and sulfuric acid (H_2SO_4) mist (Method 8).[1,2]

Microprocessor-Controlled Stack Sampling

In these sampling packages, a microprocessor directs the automatic sampling method, which can be selected to follow

© 2003 by Béla Lipták

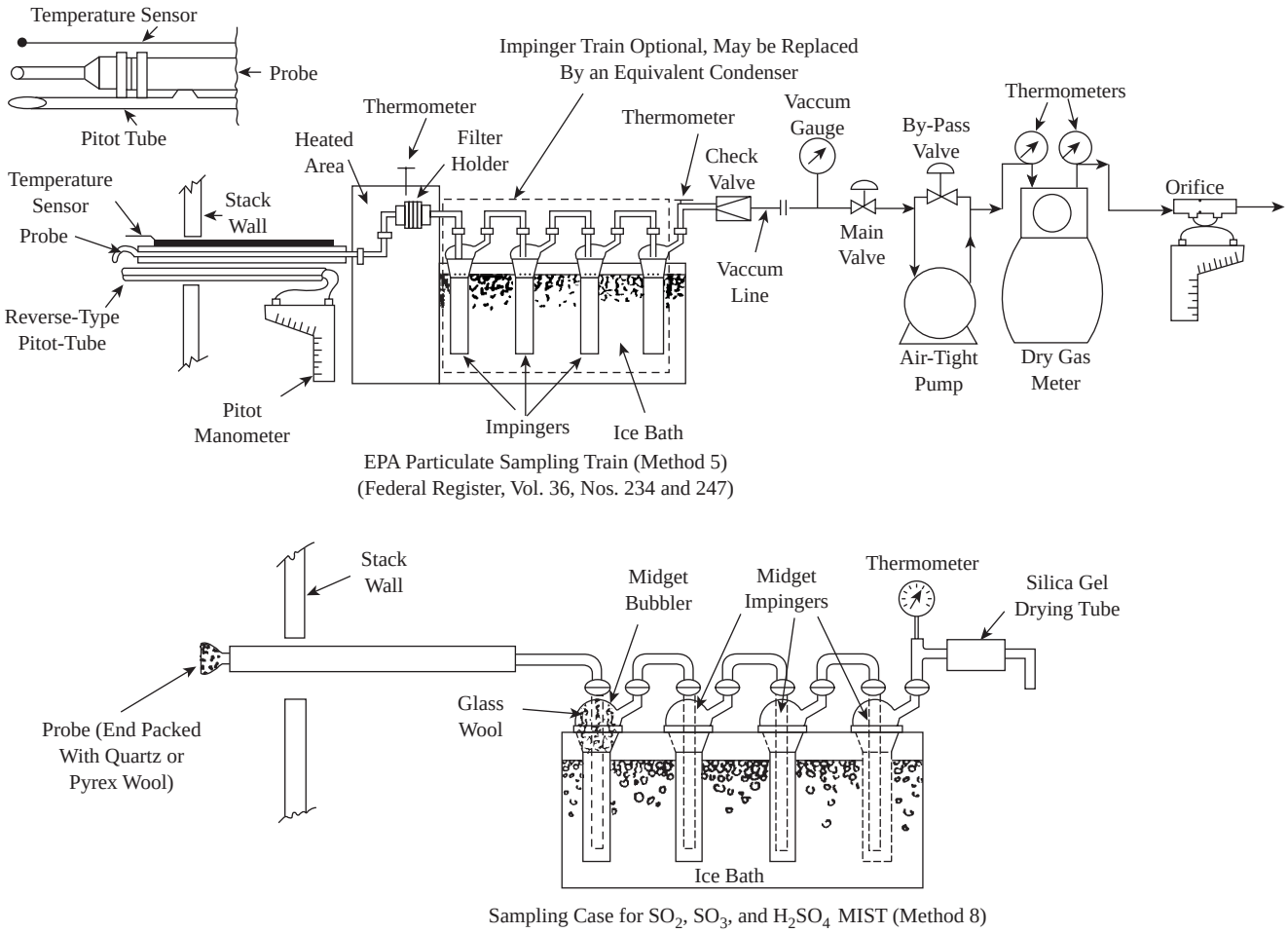

FIG. 8.3a
Top: EPA particulate sampling train (Method 5). Bottom: Sampling case for SO_2, SO_3, and H_2SO_4 mist (Method 8).

U.S. EPA Method 5 or other international methods specified by Verein Deutscher Ingenieure (VDI), British Standards Institution (BSI), or International Standards Organization (ISO). The microprocessor stores all measurements, reviews and diagnoses all inputs, controls the required parameters, calculates isokinetic conditions, and either reports the results in a printed form or transfers them to a floppy disk.

Besides the controller, such a package usually consists of a probe, a filter (hot) box, a cold box, a flexible sample line, glassware, a node box, and a monorail system. The probe is usually 3, 5, 7, or 10 ft (0.9, 1.5, 2.1, or 3 m) and made of stainless steel with a glass liner. Most probes are jacket heated and are provided with both a liner thermocouple and a stack temperature thermocouple.

This section will give a detailed description of each of the four subsystems: the pitot assembly, the heated and ice-bath compartments, and the control unit.

The Pitot Tube Assembly

The procurement of representative samples of particulates suspended in gas streams demands that the velocity at the entrance to the sampling probe be precisely equal to the stream velocity at that point. This is accomplished *by regulating the rate of sample withdrawal* so that the static pressure within the probe is equal to the static pressure in the fluid stream at the point of sampling.

A pitot tube of special design is used for such purposes with means for measuring the pertinent pressures. The pressure difference can be maintained at zero by automatically controlling the sample draw-off rate. Figure 8.3b shows a pitot tube manometer assembly for measuring stack gas velocity.

The Type S (Stauscheibe, or reverse) pitot tube consists of two opposing openings: one made to face upstream and the other downstream during the measurement. The pressure difference detected between the impact pressure (measured against the gas flow) and the static pressure is related to the stack velocity.

Type S Pitot and the Sampling Probe Figure 8.3c illustrates the construction of the Type S pitot tube. The external tubing diameter is normally between $\frac{3}{16}$ and $\frac{3}{8}$ in. (4.8 and 9.5 mm). As can be seen, there is an equal distance from the base of each leg of the tube to its respective face-opening planes.

© 2003 by Béla Lipták

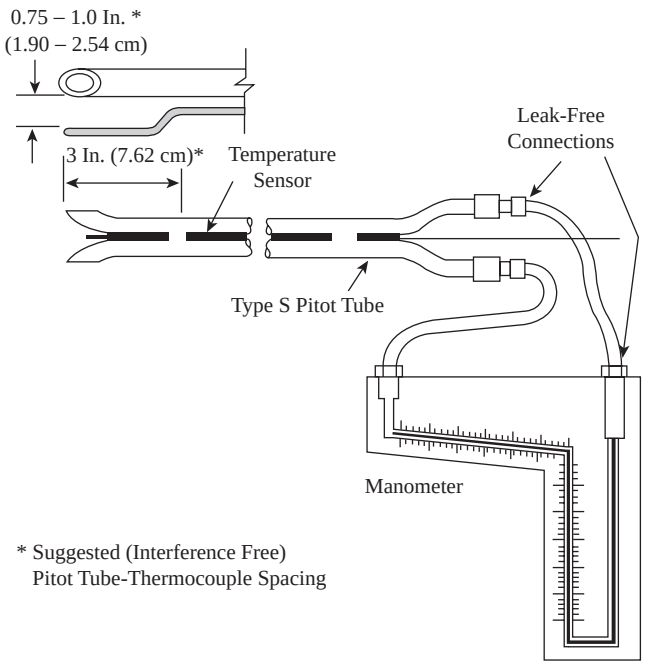

FIG. 8.3b

Type S pitot tube manometer assembly.

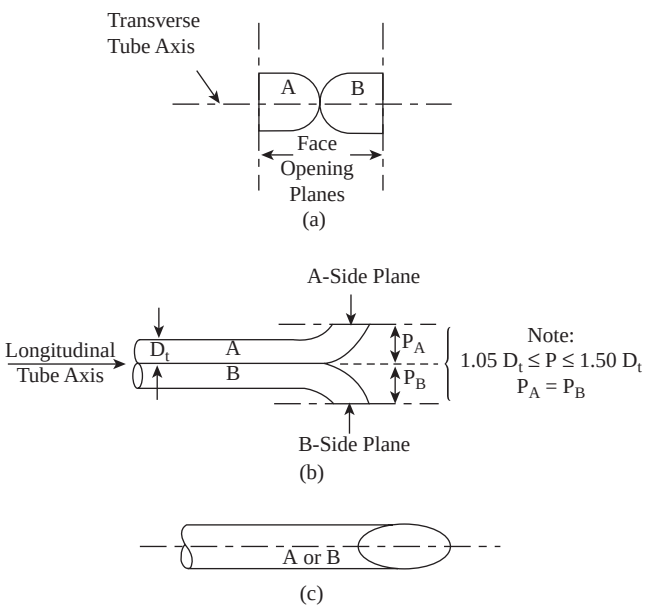

FIG. 8.3c

Properly constructed Type S pitot tube. (a) End view: face-opening planes perpendicular to transverse axis. (b) Top view: face-opening planes parallel to longitudinal axis. (c) Side view: both legs of equal length and center lines coincident, when viewed from both sides; baseline coefficient values of 0.84 may be assigned to pitot tubes constructed this way.

This distance (P_A and P_B) is between 1.05 and 1.50 times the external tube diameter. The face openings of the pitot tube should be aligned as shown.

Figure 8.3d shows the pitot tube in combination with the sampling probe. The relative placement of these components

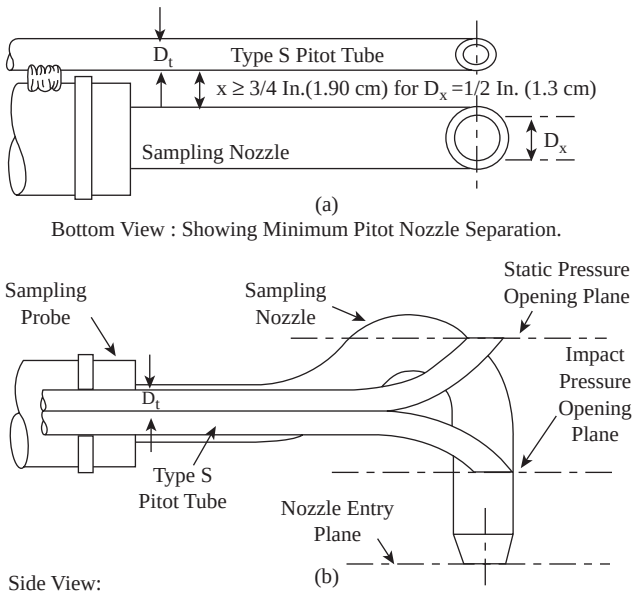

FIG. 8.3d

Proper pitot tube with sampling probe nozzle configuration to prevent aerodynamic interference. (a) Bottom view: minimum pitot nozzle separation. (b) Side view: to prevent pitot tube from interfering with gas flow streamlines approaching the nozzle, the impact pressure-opening plane of the pitot tube shall be even with or above the nozzle entry plane.

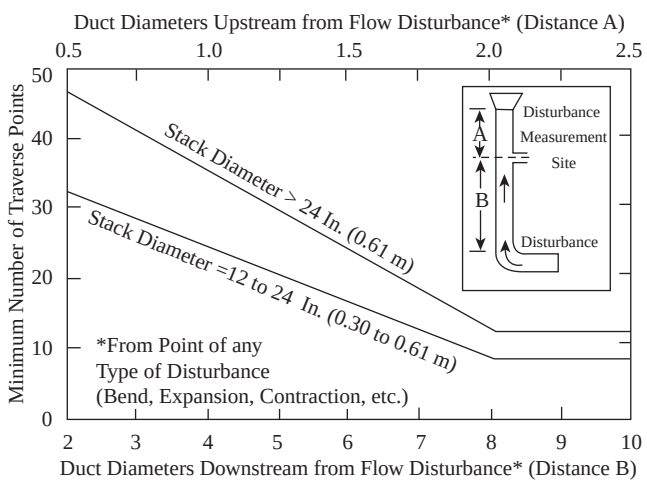

FIG. 8.3e

Minimum number of traverse points for particulate traverses.

eliminates the major aerodynamic interference effects. The probe nozzle is of the bottom-hook or elbow design. It is made of seamless 316 stainless steel or glass with a sharp, tapered leading edge. The angle of taper should be less than 30°, and the taper should be on the outside to preserve a constant internal diameter (ID).

© 2003 by Béla Lipták

For probe lining of either borosilicate or quartz glass, probe liners are used for stack temperatures up to approximately 900°F (482°C); quartz liners are used for temperatures between 900 and 1650°F (482 and 899°C). Although borosilicate or quartz glass probe linings are generally recommended, 316 stainless steel, Incoloy, or other corrosion-resistant metal may also be used.

Selecting the Sampling Point The specific points of stack sampling are selected to ensure that the samples collected are representative of the material being discharged or controlled. These points are determined after examination of the process of the sources of emissions and their variation with time.

In general, the sampling point should be located at a distance equal to at least eight stack or duct diameters downstream and two diameters upstream from any source of flow disturbance, such as expansion, bend, contraction, valve, fitting, or visible flame. (Note: This eight and two criterion is adopted to ensure the presence of stable, fully developed flow patterns at the test section.) For rectangular stacks, the equivalent diameter is calculated from the following equation:

$$\text{Equivalent diameter} = 2(\text{length} \times \text{width})/(\text{length} + \text{width}) \qquad \textbf{8.3(1)}$$

Traversing Point Locations Next, provisions must be made to traverse the stack. The number of traverse points is 12. If the eight and two diameter criterion is not met, the required number of traverse points depends on the sampling point distance from the nearest upstream and downstream disturbances. This number may be determined by using Figure 8.3e.

The cross-sectional layout and location of traverse points are as follows:

1. For circular stacks, the traverse points should be located on two perpendicular diameters, as shown in Figure 8.3f and Table 8.3g.
2. For rectangular stacks, the cross section is divided into as many equal rectangular areas as traverse points, such that the ratio of the length to width of the elemental area is between 1 and 2. The traverse points are to be located at the center of at least nine and preferably more equal areas, as shown in Figure 8.3f.

Pitot Tube Calculation Form The velocity head at various traverse points is measured using the pitot tube assembly shown in Figure 8.3b. The gas samples are collected at a rate proportional to the stack gas velocity and analyzed for carbon monoxide (CO), carbon dioxide (CO_2), and oxygen (O_2).

The pitot tube is calibrated by measuring the velocity head at some point in the flowing gas stream with both the Type S pitot tube and a standard pitot tube with a known coefficient. Other data also needed for calculation of the volumetric flow are stack temperature, stack and barometric pressures, and wet-bulb and dry-bulb temperatures of the gas sample at each traverse.

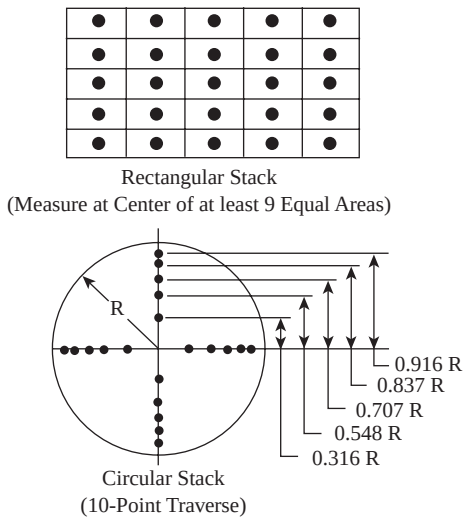

FIG. 8.3f
Traverse point locations for velocity measurement or for multipoint sampling.

Table8.3h gives the equations for converting pitot tube readings into velocity and mass flow, and a typical data sheet for stack flow measurements.[3]

Sampling Velocity for Particle Collection Based on the range of velocity heads, a probe with a properly sized nozzle is selected to maintain isokinetic sampling of particulate matter. As shown in Figure 8.3i, a converging stream will be developed at the nozzle face if the sampling velocity is too high. Under this subisokinetic sampling condition, an excessive amount of lighter particles enters the probe.

Because of the inertia effect, the heavier particles, especially those in the range of 3 microns or greater, travel around the edge of the nozzle and are not collected. The result is a sample indicating an excessively high concentration of lighter particles, and the weight of the solid sample is in error on the low side. Conversely, portions of the gas stream approaching at a higher velocity are deflected if the sampling velocity is below that of the flowing gas stream.

Under this superisokinetic sampling condition, the lighter particles follow the deflected stream and are not collected, while the heavier particles, because of their inertia, continue into the probe. The result is a sampling indicating high concentration of heavier particles, and the weight of solid sample is in error on the high side.

Isokinetic Sampling Isokinetic sampling requires the precise adjustment of the sampling rate with the aid of the pitot tube manometer readings and nomographs such as APTD-0576.[9] If the pressure drop across the filter in the sampling unit becomes too high, making isokinetic sampling difficult to maintain, the filter may be replaced in the midst of a sample run.

To measure the concentration of particulate matter, the sampling time for each run should be at least 60 min, and the minimum volumetric rate of sampling should be 30 dry scfm (51 m^3/h).[4]

© 2003 by Béla Lipták

TABLE 8.3g
Location of Traverse Points in Circular Stacks[a]

Traverse Point Number on a Diameter	Number of Traverse Points on a Diameter											
	2	4	6	8	10	12	14	16	18	20	22	24
1	14.6	6.7	4.4	3.2	2.6	2.1	1.8	1.6	1.4	1.3	1.1	1.1
2	85.4	25.0	14.6	1.5	8.2	6.7	5.7	4.9	4.4	3.9	3.5	3.2
3	75.0	29.6	19.4	14.6	11.8	9.9	8.5	7.5	6.7	6.0	5.5	
4	93.3	70.4	32.3	22.6	17.7	14.6	12.5	10.9	9.7	8.7	7.9	
5	85.4	67.7	34.2	25.0	20.1	16.9	14.6	12.9	11.6	10.5		
6	95.6	80.6	65.8	35.6	26.9	22.0	18.8	16.5	14.6	13.2		
7	89.5	77.4	64.4	36.6	28.3	23.6	20.4	18.0	16.1			
8	96.8	85.4	75.0	63.4	37.5	29.6	25.0	21.8	19.4			
9	91.8	82.3	73.1	62.5	38.2	30.6	26.2	23.0				
10	97.4	88.2	79.9	71.7	61.8	38.8	31.5	27.2				
11	93.3	85.4	78.0	70.4	61.2	39.3	32.3					
12	97.9	90.1	83.1	76.4	69.4	60.7	39.8					
13	94.3	87.5	81.2	75.0	68.5	60.2						
14	98.2	91.5	85.4	79.6	73.8	67.7						
15	95.1	89.1	83.5	78.2	72.8							
16	98.4	92.5	87.1	82.0	77.0							
17	95.6	90.3	85.4	80.6								
18	98.6	93.3	88.4	83.9								
19	96.1	91.3	86.8									
20	98.7	94.0	89.5									
21	96.5	92.1										
22	98.9	94.5										
23	96.8											
24	98.9											

[a]Percent of stack diameter from inside wall to traverse point.

Heated Compartment (Hot Box)

As shown in Figure 8.3a, the probe is connected to the heated compartment that contains the filter holder and other particulate-collecting devices, such as cyclone and flask. The filter holder is made of borosilicate glass, with a frit filter support and a silicone rubber gasket.

The compartment is insulated and equipped with a heating system capable of maintaining a temperature around the filter holder during sampling at 248 ± 25°F (120 ± 14°C), or such other temperature as specified by the EPA. The thermometer should measure temperature to within 5.4°F (3°C). The compartment should be provided with a circulating fan to minimize thermal gradients.

Ice-Bath Compartment (Cold Box)

The ice-bath compartment contains a number of impingers and bubblers. The system for determining stack gas moisture content consists of four impingers connected in series, as shown in Figure 8.3a. The first, third, and fourth impingers are of the Greenburg–Smith design. To reduce the pressure drop, the tips are removed and replaced with a 0.5-in. (12.5-mm) ID glass tube extending to 0.5 in. (12.5 mm) from the bottom of the flask.

The second impinger is of the Greenburg–Smith design with a standard tip. During sampling for particulates, the first and second impingers are filled with 100 ml (3.4 oz) of distilled and deionized water. The third impinger is left dry to separate entrained water. The last impinger is filled with 200 to 300 g (7 to 10.5 oz) of precisely weighed silica gel (6 to 16 mesh) that has been dried at 350°F (177°C) for 2 h to completely remove any remaining water.

A thermometer capable of measuring temperature to within 2°F (1.1°C) is placed at the outlet of the last impinger for monitoring purposes. Crushed ice should be added during the run to maintain the temperature of the gas, leaving the last impinger at 60°F (16°C) or less.

© 2003 by Béla Lipták

TABLE 8.3h
Pitot Tube Calculation Sheet

STACK VOLUME DATA

Stack no. _____ Station _____

Date _____ Page _____

Name of firm _____

Point	*Position, in.*	*Reading, in. of H_2O*	$\sqrt{H}$	*Temperature t_3, °F*	*Velocity V_3, ft/sec*
1					
2					
3					
4					
5					
6					
7					
8					
9					
10					
11					
12					
13					
14					
15					
16					
	Totals				
	Average				
	Absolute temperature: $T_s = t_s + 460$ = °R				

Dry-bulb temperature: t_d = _____ °F Barometer: P_b = _____ in Hg

Wet-bulb temperature: t_w = _____ °F Stack gauge pressure: _____ in., H_2O

Absolute humidity: W = __ lb H_2O/lb dry gas Stack absolute pressure: P_s = ___ in., $H_2O/13.6 \pm P_h$ ___ in., Hg

Stack area: A_s = _____ ft^2 Pitot correction factor: F_s = _____

Component	Volume Fraction, Dry Basis × Molecular Weight = Weight Fraction, Dry Basis	
Carbon dioxide		44 =
Carbon monoxide		28 =
Oxygen		32 =
Nitrogen		28 =

Average dry gas molecular weight: M = _____

Specific gravity of stack gas: $G_S = \dfrac{0.62M(W+1)}{18+MW} = \dfrac{0.62\times\_\_\times\_\_}{18+\_\_} =$ _____

(Reference dry air at same conditions)

Velocity: $V_s = 2.9\ F_s \sqrt{\dfrac{29.92\times T_S}{P_S\times G_S}}\sqrt{H} = 2.9\times\_\_\sqrt{\dfrac{29.92\times\_\_}{\_\_\times\_\_}}\sqrt{H}$ =_____ft./sec.

Volume = _____ ft./sec × _____ ft^2 × 60 _____ = _____ cfm.

Standard volume = cfm. × $\dfrac{530}{T_S}\times\dfrac{P_S}{29.92} = __\times\dfrac{530}{_}\times\dfrac{__}{29.92} = __$scfm.

© 2003 by Béla Lipták

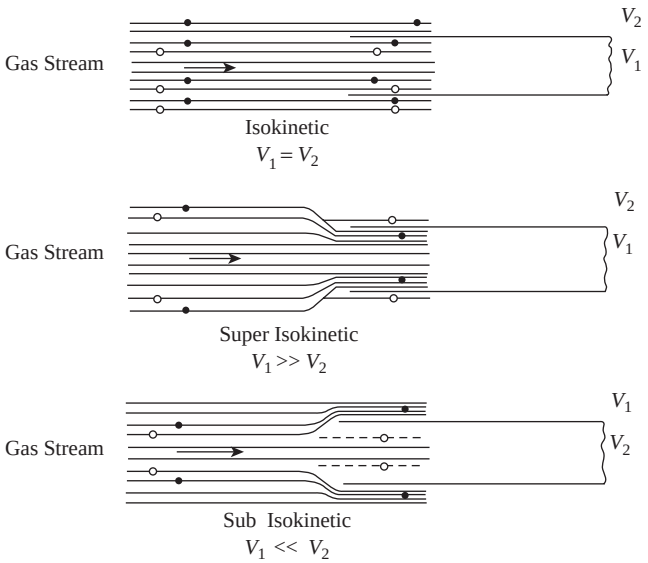

FIG. 8.3i
Particle collection and sampling velocity.

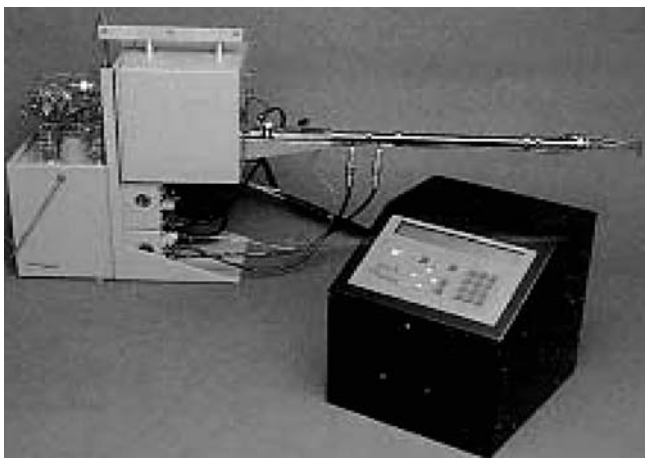

FIG. 8.3j
Automatic stack train. (Courtesy of ThermoAndersen.)

Control Unit

As shown in Figure 8.3a, the control unit consists of the system's vacuum pump, valves, switches, thermometers, and totalizing dry gas meter. This system is connected by a vacuum line to the last Greenburg–Smith impinger. The pump intake vacuum is monitored with a vacuum gauge just after the quick disconnect.

A bypass valve parallel with the vacuum pump provides fine control and permits recirculation of gases at a low sampling rate so that the pump motor is not overloaded. Downstream from the pump and bypass valve are thermometers, a dry gas meter, and calibrated orifice and inclined/vertical manometers.

The calibrated orifice and inclined manometer indicate the instantaneous sampling rate. The totalizing dry gas meter gives an integrated gas volume. The average of the two temperatures on each side of the dry gas meter gives the temperature at which the sample is collected. The addition of atmospheric pressure to orifice pressure gives meter pressure.

Automatic Sampling Trains In the automatic sampling train (AST) packages (Figure 8.3j), a microprocessor stores all measurements, reviews and diagnoses all inputs, controls the required parameters, calculates isokinetic conditions, and

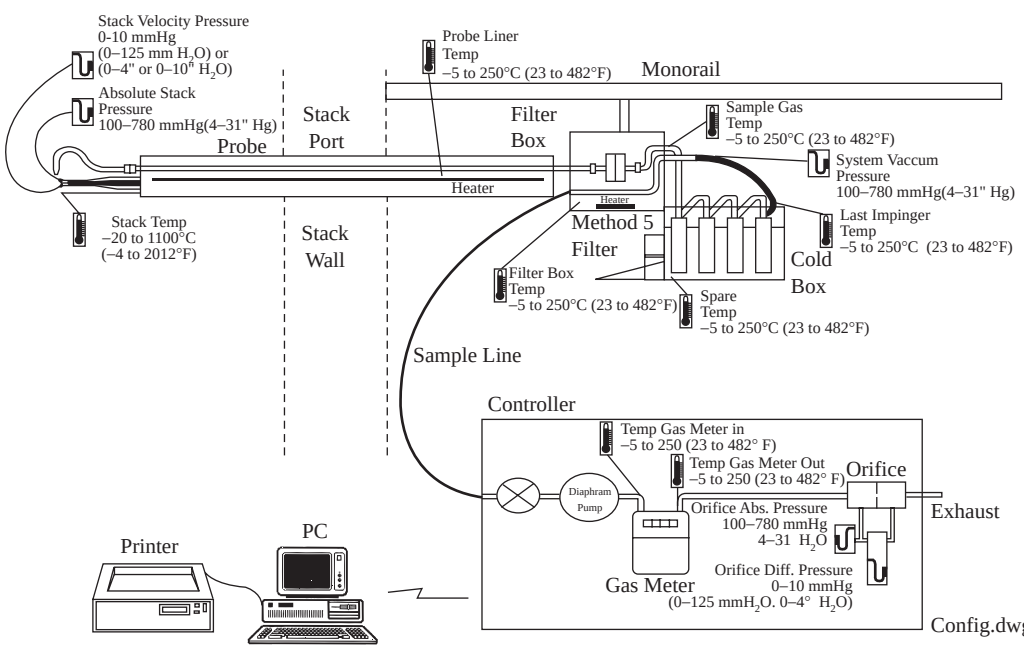

Fig. 8.3k
The components of an automatic stack train. (Courtesy of ThermoAndersen.)

© 2003 by Béla Lipták

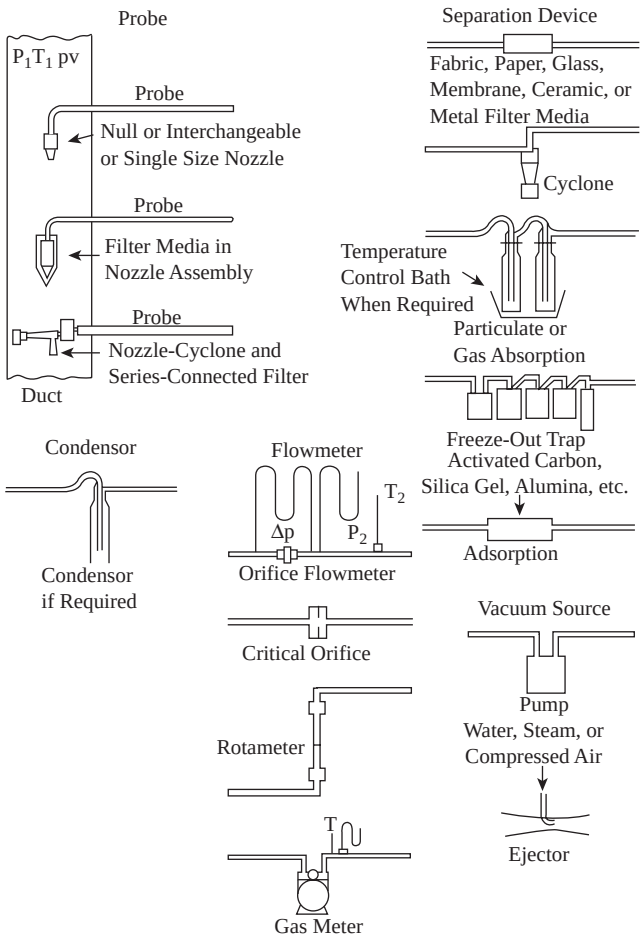

FIG. 8.3l
Components of common sampling systems.

either reports the results in a printed form or transfers them to a floppy disk.

The measured variables include the temperatures of the stack, probe liner, filter box, condenser outlet, and dry gas meter (Figure 8.3k). The pressures are detected by an absolute and a differential pressure transducer and are used to measure the pressure of the stack gas, the barometric pressure, and the velocity pressure of the stack gas. The normal capacity of the vacuum pump that draws the sample is 0.75 cfm (21 l/min), and the dry gas meter has an operating range of 0.1 to 1.5 cfm (2.8 to 42 l/min).

The node box provides the interface between the filter box and the cold box by measuring the temperatures in both. It measures and stores the temperature, pressure, and velocity in the stack. The monorail eliminates the need for bulky supports.

Precise measurements require that the thermometers be capable of measuring the temperature to within 5.4°F (3°C); the dry gas meter is inaccurate to within 2% of the volume; the barometer is inaccurate within 0.25 mmHg (torr) (0.035 kPa); and the manometer is inaccurate within 0.25 mmHg (torr) (0.035 kPa).

The umbilical cord is an integrated multiconductor assembly containing both pneumatic and electrical conductors. It connects the two-module sampling unit to the control unit, as well as the pitot tube stack velocity signals to the manometers or differential pressure gauges.

SAMPLING FOR GASES AND VAPORS

Some commonly used components in stack-sampling systems are illustrated in Figure 8.3l. If ball-and-socket joints and compression fittings are used, any arrangement of components is readily set up for field use. The stack sampling components are selected on the basis of the source to be sampled, the substances involved, and the data needed.

A summary of sampling procedure outlines was developed by industrial hygienists[10] for specific substances. The procedural outlines serve as a starting point in assembling a stack sampling system, after consideration has been given to the complications that might arise because of the presence of interfering substances in the gas samples. Other recommended sampling procedures that form gases and vapors are given in Reference 11.

References

1. Environmental Protection Agency, "Standards of Performance for New Stationary Sources," *Federal Register,* 36 (159): 15, 704–715, 722, August 17, 1971.
2. Environmental Protection Agency, "Standards of Performance for New Stationary Sources," revision to Reference Method 1–8, *Federal Register,* 42 (160): 41, 754–841, 789, August 18, 1977.
3. Morrow, N. L., Brief, R. S., and Bertrand, R. R., "Sampling and Analyzing Air Pollution Sources," *Chemical Engineering,* 79 (2): 84–98, January 24, 1972.
4. Environmental Protection Agency, "Standards of Performance for New Stationary Sources," *Federal Register,* 30 (116): 20, 790–820, 794, June 14, 1974.
5. Environmental Protection Agency, "Standards of Performance for New Stationary Sources," *Federal Register,* 52(208): 41424–41430, October 28, 1987.
6. Environmental Protection Agency, "Standards of Performance for New Stationary Sources," *Federal Register,* 54 (58): 12621–12627, March 28, 1989.
7. Environmental Protection Agency, "Standards of Performance for New Stationary Sources," *Federal Register,* 55 (31): 5211–5217, February 14, 1990.
8. Environmental protection Agency, "Standards of Performance for New Stationary Sources," *Federal Register,* 56 (30): 5758–5774, February 13, 1991.
9. Rom, J. J., "Maintenance, Calibration and Operation of Isokinetic Source Sampling Equipment," Environmental Protection Agency, APTD-0576.
10. Vander Kolk, A. L., Michigan Department of Public Health, private communications, September 17, 1980.
11. American Society for Testing and Materials, "Standards of Methods for Sampling and Analysis of Atmospheres," Part 23, West Conshohocken, PA: American Society for Testing and Materials, 1971.

© 2003 by Béla Lipták

Bibliography

Annual Book of ASTM Standards, West Conshohocken, PA: American Society for Testing and Materials, 2002.

Dubois, R. et al, *The New Sampling Initiative*, 47th Annual ISA Analysis Division Symposium, Denver, April 2002.

Fussell, E., "Molding the Future of Process Analytical Sampling," *InTech*, August 2001, 32.

Gregg, W., "The Use of Inertial Separators for Sampling," ISA/93 Technical Conference, Chicago, September 19–24, 1993.

Laird, J. C., "Unique Extractive Stack Sampling," 1978 ISA Conference, Houston.

McMahon, T. K., "The New Sampling/Sensor Initiative," *Control*, August 2001.

Pevoto, L. F. and Hawkins, L. J., "Sample Preparation Techniques for Very Wet Gas Analysis," ISA Conference, Houston, October 1992.

Sherman, R. E., *Process Analyzer Sample-Conditioning System Technology*, New York: John Wiley & Sons, 2002.

Van den Berg, F. W. J., Hoefsloot, H. C. J., and Smilde, A. K., "Selection of Optimal Process Analyzers for Plant-Wide Monitoring," *Analytical Chemistry*, 74(13), 3105–3111, 2002.

© 2003 by Béla Lipták

8.4 Analyzers Operating on Electrochemical Principles

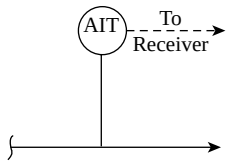

Flow Sheet Symbol

R. GILBERT (1982) **J. N. HARMAN III** (1995) **B. G. LIPTÁK** (2003)

Design Variations:	Amperometric, coulometric, galvanometric, polarographic, and potentiometric principles
Sections Discussing Specific Applications:	8.10—carbon monoxide, 8.11—chlorine, 8.17—conductivity, 8.24—fluoride, 8.26—hydrogen sulfide, 8.28—ion-selective electrodes, 8.33—moisture in gas, 8.41—ORP probes, 8.42—oxygen, 8.44 and 8.45—ozone, 8.48—pH, 8.56—sulfur oxide, 8.59—toxic gases
Inaccuracy:	Generally 1% of full scale with absolute error values down to under 1.0 parts per billion (ppb)
Costs:	Amperometric or polarographic residual chlorine transmitters cost about $8000, with the yearly cost of chemicals for the amperometric units adding another $3000 (somewhat less for polarographic). An electrochemical gas diffusion detector for hydrogen sulfide costs $2500. Potentiometric probes for pH, oxidation–reduction potential, and ion-selective measurements cost about $500, with associated transmitter about $2500. Electrochemical probes for nitrogen oxide detection in stacks cost $7000. The electrolytic dissolved oxygen probe and transmitter cost $3500. Costs for amperometric gas and dissolved ozone detector range from $4000 to $8000. An electrochemical membrane diffusion system to automatically monitor toxic gas concentration in 16 locations costs from $12,000 to $20,000. For more detailed cost information, refer to the sections in this chapter where the specific analyzers are discussed.
Partial List of Suppliers:	ABB (www.abb.com) Advanced Sensor Technologies Inc. (www.astisensor.com) American Gas & Chemical Ltd. (www.amgas.com) Analytical Technologies Inc. (www.analyticaltechnologies.com) B&W Technologies Ltd. (www.gasmonitors.com) Bacharach Inc. (www.bacharach-inc.com) Bran & Luebbe Analyzing, Technicon Industrial Systems (www.branluebbe.com) Brinkmann Instruments Inc. (www.brinkmann.com) Broadley James (www.broadleyjames.com) CEA Instruments Inc. (www.ceainstr.com) Cole-Parmer Instrument Co. (www.coleparmer.com) Control Instruments Corp. (www.controlinstruments.com) Custom Sensors and Technology (www.customsensors.com) Detector Electronics Corporation (www.detronics.com) Draeger Safety Inc. (www.draeger.com) EcoChem Analytics (www.ecochem.biz) Electro-Chemical Devices (www.ecdi.com) Emerson Process—Process Analytic Div. (www.processanalytic.com) Endress + Hauser (www.endress.com) Enmet Analytical Corp. (www.enmet.com) Fisher Scientific (www.fishersci.com) The Foxboro Company (www.foxboro.com) +GF+ Signet (www.gfsignet.com)

© 2003 by Béla Lipták

GLI International (www.gliint.com)
Global FIA (www@globalfia.com)
Hamilton Co. (www.hamiltoncompany.com)
Honeywell (www.honeywell.com)
Horiba Instruments Inc. (www.horiba.com)
International Sensor Technology (www.intlsensor.com)
Ionics Inc. (www.ionics.com)
Knick (www.knick.de)
Mettler-Toledo (www.mt.com)
Milton Roy, Process Analytical Div. (www.miltonroy.com)
Mine Safety Appliances (www.msanet.com)
Osmonics Lakewood (www.osmonics.com)
Pfaudler Inc. (www.pfaudler.com)
Phoenix Electrode Co. (www.phoenixelectrode.com)
Rosemount Analytical Inc., Uniloc Div. (www.rauniloc.com)
Sargent-Welch Scientific (www.sargentwelch.com)
Scott Instruments (www.scottinstruments.com)
Sensidyne Inc. (www.sensidyne.com)
Sensorex (www.sensorex.com)
Sierra Monitor Corp. (www.sierramonitor.com)
Teledyne Analytical Instruments (www.teledyne-ai.com)
Thermo Environmental Instruments (www.thermoei.com)
Thermo Gas Tech (www.gastech.com)
Thermo Orion (www.thermo.com)
Thornton (www.thorntoninc.com)
Universal Sensors & Devices Inc. (www.universalsensors.com)
Van London Co. (www.vanlondon.com)
Yokogawa (www.yca.com)
Zellweger Analytics—MDA Scientific Inc. (www.zelana.com)

INTRODUCTION

The purpose of this section is to give an overall perspective of the many electrochemical analyzers used in the processing industries. These instruments will be discussed in more detail in later sections of this chapter. Electrochemical analyzers measure composition or concentration by detecting the changes in voltage or current that occur between two electrodes in a solution (electrolyte) over time, because of the oxidation or reduction of that solution.

In galvanic and polarographic analyzers (such as CO, O_2, and toxic gas sensors discussed in Sections 8.10, 8.42, and 8.59), the electrolyte is usually a gel. The gel is separated from the process stream by a membrane and the electrochemical reaction in this electrolyte either occurs spontaneously or is caused by a polarizing voltage.

In potentiometric analyzers (such as Cl, conductivity, ion-selective, oxidation–reduction potential (ORP), and pH probes discussed in Sections 8.11, 8.17, 8.28, 8.39, and 8.48), an electrical potential is detected, which is generated in response to the presence of dissolved ionized solids. The ORP probe detects the ratio of oxidizing to reducing agent. Conductivity sensors measure the solution's ability to conduct electricity, which depends on the concentration of dissolved ionized solids.

In amperometric analyzers (such as Cl, Fl, HS, moisture in gas, O_3, and toxic gases covered in Sections 8.11, 8.24, 8.26, 8.33, 8.44, 8.45, and 8.59) if a strong oxidizing agent is present, the polarization of the measuring electrode is depolarized and a current flow is generated, which is proportional to the concentration of the oxidizing agent.

In coulometric analyzers (such as CO, oxygen in gas, and SO sensors discussed in Sections 8.10, 8.42, and 8.56), the measured gas diffuses through the potassium hydroxide electrolyte to the cathode of the electrochemical cell, where it is reduced to hydroxyl ions. As an external voltage causes these ions to migrate to the anode, the resulting cell current is a measure of concentration.

VOLTAMETRIC ANALYSIS

Voltametric analyzers monitor the current, voltage, or charge that results from a specific oxidation–reduction reaction of the component of interest. During an oxidation–reduction reaction, one or more electrons are transferred from one atom or molecule to another.

This section presents a brief review of voltametry, including a discussion of the concepts and properties of electrochemical probes, potentiometry, amperometry, polarography, and coulometry. The distinctions among voltametric methods are summarized in Table 8.4a. This table lists the common voltametric methods of analysis and their usual applications.

© 2003 by Béla Lipták

TABLE 8.4a
Summary of Voltametric Methods

Method	*Measured*[†] *Variables*	*On-Line Instrument*	*Determinations*[a]
Potentiometry	V	Yes	pH Anions (F^-, $S^=$, Cl^-) Cations (NH_4^+, Ca^{++}, Mg^{++})
Polarography	i, v	Yes	Pesticides Mercaptans Thiosulfates Chlorinated organics Toxic heavy metals
Stripping	i, v	No	Heavy metals Selenides Halogens Thioamides Trace metals
Amperometry	i, t, c	Yes	Sulfates Halides Phenols Aromatic amines Olefins
Controlled potential coulometry	$\int i(t)$	Yes	Precious metals Alloys Dissolved oxygen
Differential pulse polarography	i, v	No	Aromatic hydrocarbons Aromatic amines Phenol Ammonium salts Carboxylic anhydrides N-nitrosamines

Note: i = current; v = applied potential; c = concentration; i(t) = current as function of time.
[a]Partial list.

Current, Voltage, and Time

Successful application of voltametry for monitoring and controlling process streams requires an understanding of the significant voltametric variables. The fundamental requirements for voltametry instrumentation are two electrodes, provisions for a current and voltage supply, and monitors for the respective voltage and current responses as a function of time. The characteristic response curves indicate the nature of the electrochemical analysis occurring in the solution between the electrodes. Figure 8.4b illustrates a surface that relates the three variables (current, voltage, and time), which are of interest in an electrochemical analysis.

The exact shape of a particular response curve in Figure 8.4b depends on the mass transport phenomena associated with the movement of the component of interest (analyte) to the working electrode. (The working electrode is the electrode in which the electrochemical process of interest occurs, while the reference electrode is passive. The usual working electrode is made from a metal, such as mercury, platinum, palladium, or gold.) Analyte diffusion to the working electrode is the usual transport mechanism required if the analytical expressions for the curves of Figure 8.4b are to be obtained. The control of diffusional mass transport is important for chronopotentiometry, amperometry, and polarography.

The electrochemical surface presented in Figure 8.4b is generated from the following equation:[1]

$$E = (E^\circ + (RT/nF)\ln(f_o/f_r(D_r/D_o)^{1/2}) + (RT/nF)\ln[K - it^{1/2})/it^{1/2})] \quad \textbf{8.4(1)}$$

Equation 8.4(1) expresses the potential (E) of the working electrode in terms of E°, the standard thermodynamic potential; R, the gas constant; T, the absolute temperature; F, Faraday's constant; n, the number of electrons transferred for the specified oxidation–reduction reaction; f, the activities of oxidized and reduced analyte forms; i, the current; and K, a constant dependent upon particular analysis parameters other than voltage, current, or time.

© 2003 by Béla Lipták

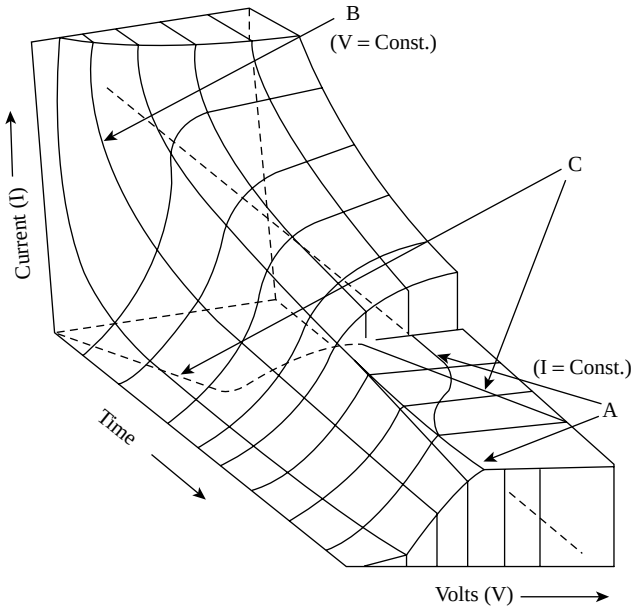

FIG. 8.4b

Response surface for voltametry, showing curve A, the process of chronopotentiometry; curve B, amperometry; and curve C, the polarographic process.

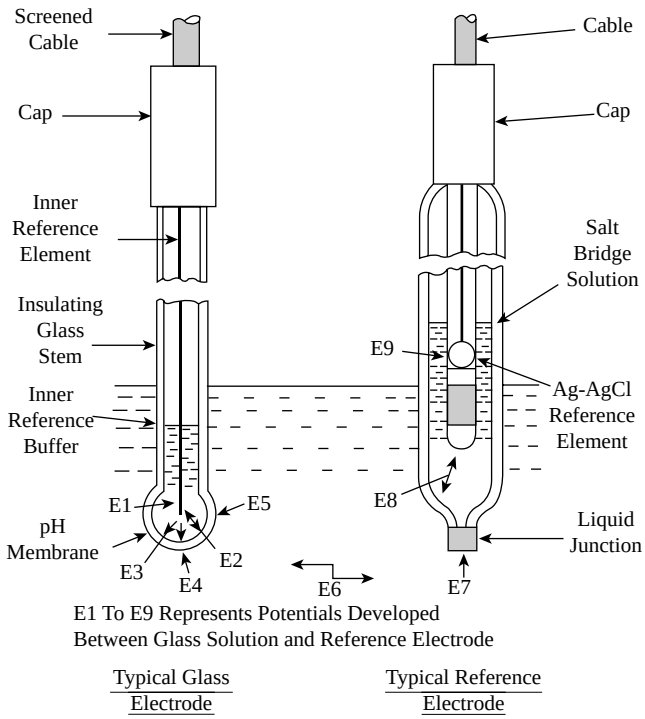

FIG. 8.4c

pH electrodes.

Potentiometry

During a potentiometric analysis, such as in ORP, pH, or ion-selective measurements, no current is passing between electrodes. The potential difference (at zero current) is monitored between the measuring and reference electrodes. At the measuring electrode, an oxidation or reduction of a solution species is taking place. Such an analysis is called chronopotentiometry when the potential difference between a metallic measuring electrode and a reference electrode is monitored as a function of time.

Potentiometry may be done with a bare metal electron-conducting electrode and a reference electrode, in which case the technique responds to the oxidation–reduction couples present in the test solution. If a potentiometric determination is conducted using an ion-selective electrode and a reference electrode, one may determine solution species over a wide dynamic concentration range with good selectivity, and there is no need for oxidation–reduction couples in the solution. Examples of ion-selective electrodes are glass electrodes for pH (Figure 8.4c) and sodium ion determination; solid-state electrodes for fluoride, chloride, and sulfide determination; and liquid ion exchange electrodes for the determination of calcium, magnesium, and nitrate ions.

If a constant current is supplied to the electrodes, the progress of the electrochemical reaction is observed by monitoring the change in potential as a function of reaction time. This procedure is labeled chronopotentiometry, and a response curve would be similar to curve A in Figure 8.4b.

If the electrochemical process occurs at a constant potential, the reaction response is monitored as a changing current as a function of time. This type of analysis is called constant potential voltametry, or amperometry. A typical response curve is labeled B in Figure 8.4b.

Finally, monitoring reaction current as a function of applied potential is called polarography, and a typical polarographic curve is represented by C, which is a diagonal cut through the response surface, in Figure 8.4b.

Galvanic and Electrolytic Probes

A probe is galvanic when no external voltage is applied across the electrodes. In that case, the current flows as the cell is depolarized as diffusion of the analyte occurs. Electrodes are consumed during this operation and require periodic replacement. An electrolytic probe is similar to a galvanic one, except that a potential is applied across the electrodes and the electrodes are not consumed. Dissolved oxygen detection is a primary application of this type of probe.

Electrochemical probes are electrochemical cells that have been designed to respond to the presence of a particular analyte. Similar to electrochemical cells, electrochemical probes can be classified as either galvanic or electrolytic. Electrolytic probes require an external potential to be applied across the electrodes; galvanic probes do not. Both types of probes require a pair of electrodes, usually metallic, which are immersed in an electrolyte so that current passes through the electrodes as the desired oxidation or reduction occurs at the surface of the working electrode.

The difference between an electrolytic and a galvanic probe is whether or not a potential from an external source is

© 2003 by Béla Lipták

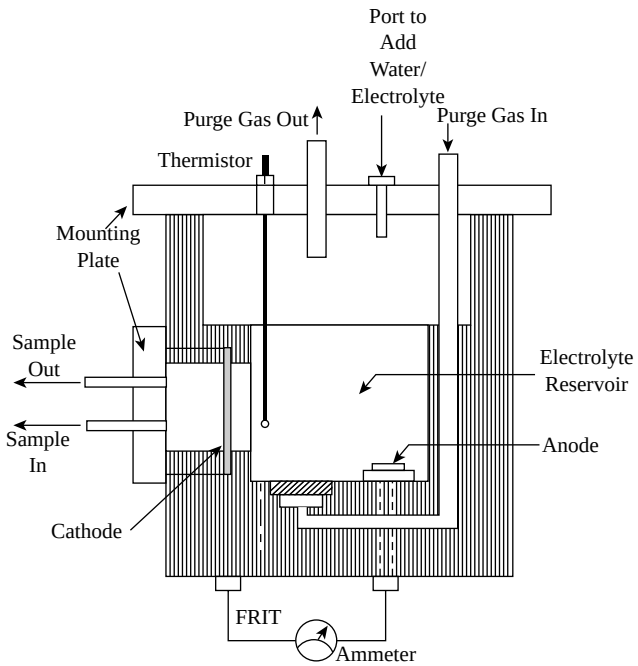

FIG. 8.4d
Galvanic oxygen detector cell. (Courtesy of Teledyne Analytical Instruments.)

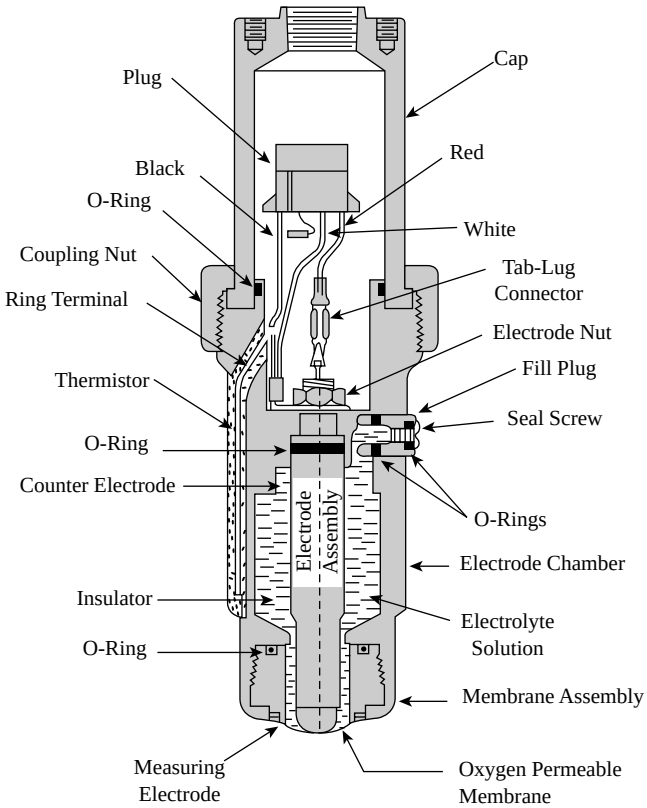

FIG. 8.4e
An oxygen-permeable membrane protects the working components of a galvanic dissolved oxygen probe. (Courtesy of ABB Inc., formerly Fischer & Porter.)

applied across the electrodes. Galvanic probes are constructed in such a manner that the presence of the analyte depolarizes the cell and allows a flow of electrons in the cell (Figure 8.4d). Because the electrochemical reaction occurs spontaneously, no external potential need be applied across the electrodes. However, galvanic probes have a major disadvantage in that the electrodes are consumed as the reaction continues. This limitation restricts their usefulness to monitoring situations in which periodic replacement of spent probes is acceptable.

Electrolytic probes are principally used as monitoring devices for dissolved oxygen in aqueous and nonaqueous media. Unlike with the galvanic probe, here a potential is applied from an external source across the electrodes. The choice of potentials is controlled by the analyte to be determined. The current from the probe is obtained at constant potential as a function of time, location of the probe within the process, or the process state.

Membrane-Covered Probes To reduce the chemical interference from the process, a diffusion-limiting membrane can be placed over both electrodes. These membranes are permeable to the component of interest and are filled with the appropriate electrolyte. The thin analyte-permeable membrane separates the cell components and the electrolyte from the solution to be analyzed (Figure 8.4e).

A deficiency of this technique is the dependence of the membrane permeability on the process temperature. This is usually corrected by measuring the process temperature and adjusting the gain of the analyzer unit to compensate for the permeability effects. Another problem is the interferences caused by dissolved gases other than oxygen, which permeate the membrane and cause interferences as they are oxidized or reduced at the working electrode. Fouling or coating of the probe necessitates frequent cleaning, although the equilibrium-dissolved oxygen sensor greatly reduces the fouling problems and also allows use in almost stagnant flows with very small face velocity at the probe.

Figure 8.4f shows a nominal configuration for an electrolytic probe. The probe consists of an inner and outer element. The inner element contains the cathode and anode with wires leading to the power supply and current-monitoring circuit. The anode is positioned in a way that isolates the cathode from the anode. The outer element fits over the inner element and provides a space for the electrolyte. The membrane is mounted on the outside of this outer element and secured with an O-ring.

Sensors are available in disposable, nonrechargeable configurations, as well as in rechargeable configurations, in which access is provided to allow electrolyte change, electrode cleaning, and membrane replacement.

Amperometry

Amperometric titration is when the end point is determined by measuring the current (amperage) that passes through the solution at a constant voltage. Amperometry is the process

© 2003 by Béla Lipták

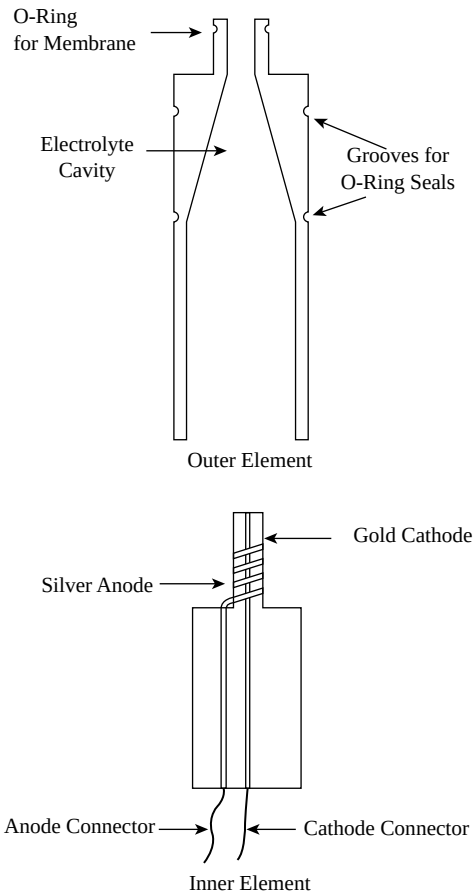

FIG. 8.4f

Configuration of an electrolytic probe. The inner element contains the anode and cathode, while the outer element isolates the electrolyte from the sample.

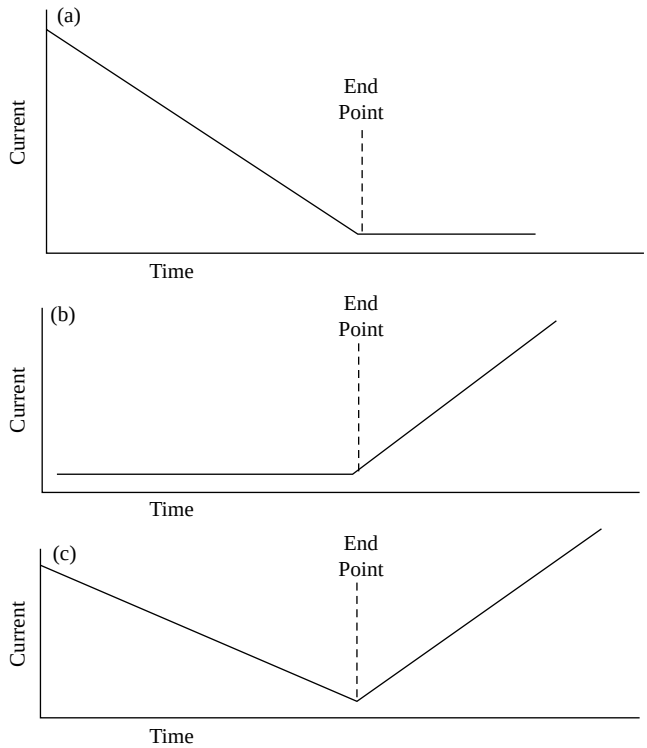

FIG. 8.4g

Response curves for polarographic cell system, showing curve A, when analyte reacts at electrode; curve B, when reagent reacts at electrode; and curve C, when analyte and reagent react at electrode.

of performing an amperometric titration. During such titration, the current flow is monitored as a function of time between working and auxiliary electrodes while the voltage difference between them is held constant. Alternatively, the current can also be monitored as a function of the amount of reagent added to bring the titration of an analyte to the (stoichiometrically defined) end point. This is also called constant potential voltametry.

In amperometry, the titrating reagent is coulometrically generated and the current that passes through a polarographic cell (containing either a solid or dropping mercury electrode at the appropriate oxidation or reduction potential) is measured as a function of reagent volume or time. Three types of response curves can be expected (Figure 8.4g).

Curve (a) is the result of the analyte reacting at the electrode, while the reagent does not. This curve indicates that the diffusion current is detected as long as the analyte remains. Once the reagent removes all the analyte, the current stops. This dead-stop end-point technique is often used for amperometric determinations of dissolved oxygen.

In curve (b), the analyte is not reduced at the working electrode, but the reagent is. In this situation, there is no current flow until the analyte is completely destroyed and the reagent is allowed to react at the electrode surface.

Finally, curve (c) indicates the response when both analyte and reagent are electroactive. The increase after the equivalence point indicates that the current is the result of excess reagent reacting at the electrode surface.

Solid Electrodes If the polarographic cell is replaced by a two-solid electrode system with a small applied potential (0.1 to 0.2 V), the response curves of interest are determined by a number of reversible reactions occurring in the cell at the voltage level impressed across the cell.

The set of reversible half-reactions of interest are symbolized as

$$R_r \; f \; R_o + e^- \qquad \textbf{8.4(2)}$$

and

$$A_o + e^- \; f \; A_r \qquad \textbf{8.4(3)}$$

where A_o and R_o are the oxidized forms, and A_r and R_r are the reduced forms of the analyte and reagent, respectively. The fundamental concept of interest is the fact that the applied potential will support current flow only when both forms represented in Equation 8.4(2) or Equation 8.4(3) are present in the test solution. Figure 8.4h represents the possible response curves that illustrate this concept.

© 2003 by Béla Lipták

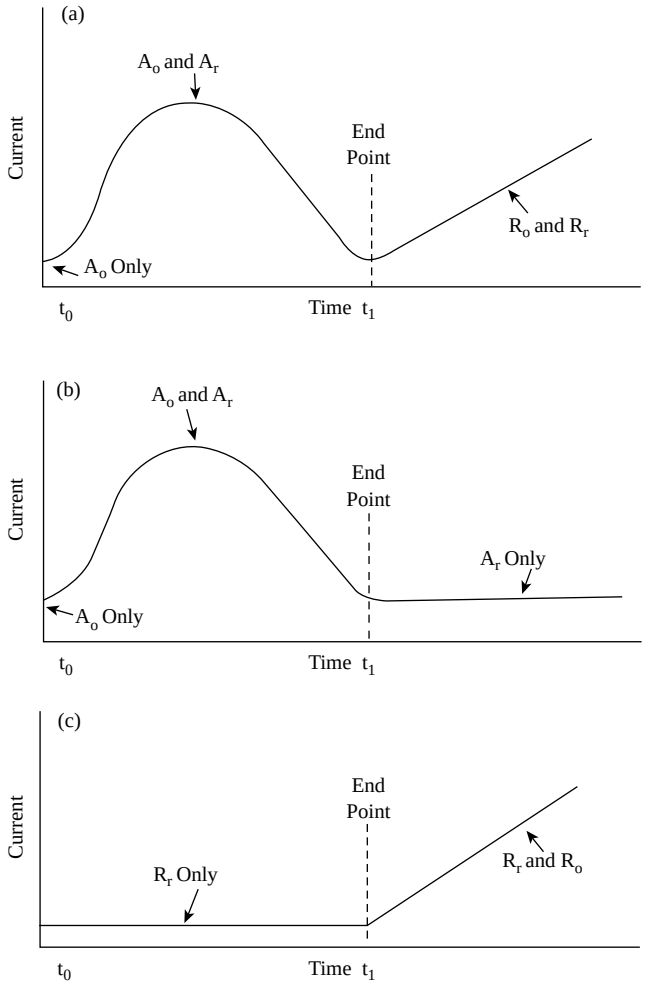

FIG. 8.4h

Response curves for two-solid electrode system, showing curve A, when analyte and reagent are reversible; curve B, when only the analyte is reversible; and curve C, when only the reagent is reversible.

In curve (a) of Figure 8.4h, the absence of current at t_o is due to the lack of A_r. For values of t so that $t_o < t < t_1$, the current response is the result of varying concentrations of A_o and A_r as R_r is added. At $t = t_1$, the current returns to zero because of the absence of A_o and R_r. Finally, for $t > t_1$, the continuous addition of R_r, coupled with the R_o present from the redox reaction with A_o, results in a continuously increasing current flow.

Curve (b) indicates the response when only the analyte reaction is reversible. The curve from $t_o < t \leq t_1$ is identical to the same portion of curve (a) for the same reasons. However, for $t > t_1$, no current is detected because the reagent half-reaction is irreversible.

Curve (c) shows the results when the analyte reaction is irreversible but the reagent half-reaction is reversible. Current is not detected until R_r remains in the solution. This case is often called a dead-start titration because the current does not begin until all the analyte has been removed. Figure 8.4i illustrates the design of another membrane-type amperometric sensor.

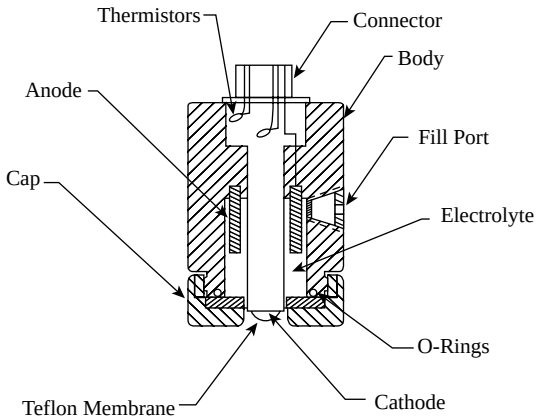

FIG. 8.4i

Membrane-type amperometric probe.

Polarography

Polarography is a process for monitoring the diffusion current flow between working and auxiliary electrodes as a function of applied voltage as it is varied systematically. The diffusion current that results is linearly dependent on the concentration of the analyte. Polarography can be applied using direct current, pulsed direct current, or alternating current (AC) voltage excitation waveforms. Dissolved oxygen determination is an example of an application for which polarography is used (Figure 8.4e).

Nobel Prize winner Jaroslav Heyrovsky developed direct current polarography in 1922. Polarography is performed by measuring the current flow, which is a function of the systematically varied electrode potential. Different types of polarographies can be performed as a function of the voltage variation patterns, voltage sweep rates, and the choice of working electrode materials.

Figure 8.4j shows a typical polarographic response curve.

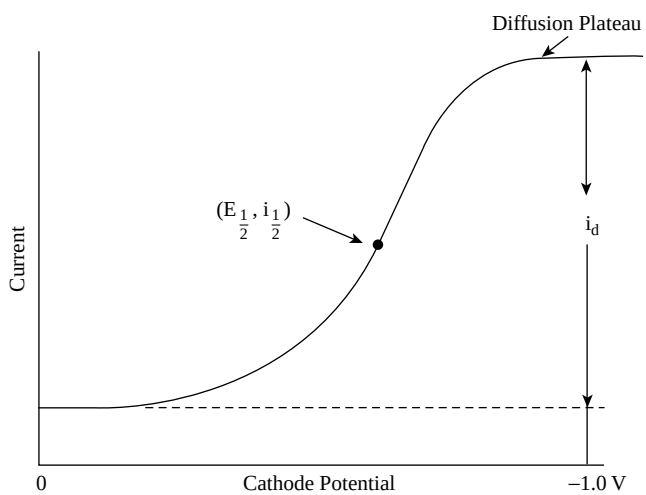

FIG. 8.4j

Polarogram showing typical current vs. cathode potential response. The diffusion current, i_d; the half-wave potential, $E_{1/2}$; and the half-wave current, $i_{1/2}$, are all illustrated.

© 2003 by Béla Lipták

For this curve, the K term in Equation 8.4(1) is defined as

$$K = nFC^{\circ}(7/3D_o)^{1/2} \qquad \textbf{8.4(4)}$$

and

$$(nF/KT)(E - E^{\circ} - \ln(f_o/f_r(D_o/D_r)^{1/2}) = \ln(i_d - i/i) \qquad \textbf{8.4(5)}$$

where i_d is the diffusion current. The curve shows an S-shaped current response as the potential at the cathode, the working electrode where analyte reduction occurs, becomes more negative. Current limited by diffusion occurs at cathodic potentials beyond the potential required to initiate reduction. Thus, i_d is sufficient to reduce the diffusion-supplied analyte concentration to zero.

The significance of this is that the diffusion rate is controlled by the concentration gradient established between the concentration at the surface of the working electrode, which is held to zero as a result of the electrode reaction, and the concentration existing in the bulk of the solution. The current observed for the Faradic process of interest is directly proportional to the concentration of the desired analyte.

Subsequently, this technique was modified by changing the voltage excitation waveform to alternating current (AC polarography) or to pulsed direct current (pulse polarography or differential pulse polarography); these modifications resulted in increased sensitivity and better discrimination for the detection of the desired analyte in a background matrix of interferences.

Advantages One of the valuable aspects of a polarographic determination is that the potential observed at the point $i_{1/2} = i_d/2$ is unique to the analyte in the solution matrix. This occurs because the potential at $i_{1/2}$ is independent of the reactant concentrations but directly related to the standard potential for the analyte half-reaction. This inflection point potential is defined as the half-wave potential, $E_{1/2}$, and is a common parameter for qualitative identification of electroactive components in a solution.

When the reaction is fast and reversible and the diffusion coefficients of the oxidized and reduced forms of the analyte are virtually identical, $E_{1/2}$ becomes E°. Another value of polarography is that the diffusion current is linearly related to the concentration of the analyte.

Coulometry

Coulometry is the process of monitoring analyte concentration by detecting the total amount of electrical charge passed between two electrodes that are held at a constant potential or when constant current flow passes between them. Because the coulomb provides a direct connection through Faraday's law between reaction current and analyte concentration during a redox process, coulometry offers a direct method of determining analyte concentration.

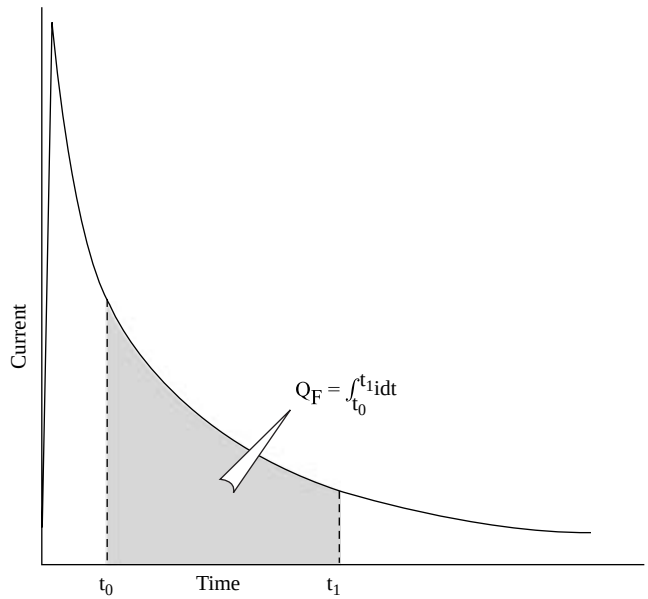

FIG. 8.4k
Response curve for controlled potential coulometry, showing the relationship among current, i; time, t; and coulombs, Q_F, in the Faradic portion of the curve.

Two types of coulometry are possible: constant current and controlled potential. Constant current coulometry depends on analyte oxidation–reduction to support the specified current flow. When the supply of material is insufficient to carry this current, the electrode potential drifts until another reaction begins. The result of this process is a potential time relationship similar to the results obtained in chronopotentiometry, and the amount of charge passed is simply the product of the constant current and electrolysis time.

Controlled Potential Coulometry By contrast, controlled potential coulometry is conducted by maintaining a constant electrode potential while a current flow is measured. The number of coulombs is determined by integration of the reaction current as a function of electrolysis time. Figure 8.4k illustrates the current–time relationship for controlled potential coulometry.

The choice of integration time is important because the current is the sum of the Faradic component and a capacitative component. As a result of this dual contribution, current integration is not started until the capacitative-charging contribution is minimal.

CONCLUSIONS

Although instruments are available for all types of voltametric analysis, currently only the potentiometric, polarographic, amperometric, and coulometric designs are available as online process analyzers. This is likely to change.

© 2003 by Béla Lipták

Limitations

The limitations of this category of sensors are mostly related to the membranes. One major problem with the thin permeable membranes is the fact that the electrode response to the analyte is directly dependent on the condition of the membrane. Once the potential has been applied across the electrodes and the concentration depletion wave has reached the inner membrane wall, the amount of analyte that reaches the electrode depends on the diffusion of the analyte through the membrane. This situation is usually acceptable because the membrane condition is stable. The membrane itself is also subject to failure, and the surface of the membrane is exposed to the process fluid, which can alter its permeability to the analyte. These conditions make the long-term reliable use of electrolytic probes problematical, because they require constant maintenance and recalibration.

Amperometric end points pose another problem. To date, provisions for the various end points possible are not available, and care must be taken when determining analysis end points. Finally, instrumentation for coulometric methods requires that the working electrode be physically separated from the auxiliary electrode so that the reaction products do not migrate to the opposite electrode. Sintered glass discs are used to restrict the migration of reaction products between the electrodes, but they permit electrical conduction through the cell. Table 8.4a provides a summary of voltametric methods and applications.

Advances

Significant advances have been made by the introduction of equilibrium-state voltametric probes. These have the advantage of analyte sensitivities that are relatively independent of membrane coating and consume so little of the analyte as a result of the measurement process that they are able to work in processes where the sample flow rate past the face of the sensor is small.

Reference

1. Reimmuth, *Analytical Chemistry,* 32:1509, 1960.

Bibliography

Adams, V., *Water and Wastewater Examination Manual,* Chelsea, MI: Lewis, 1990.

Bard, A. J. and Faulkner, L. R., *Electrochemical Methods,* New York: John Wiley & Sons, 1980.

Bond, A. and Anterford, D., "Comparative Study of a Wide Variety of Polarographic Techniques with Multifunctional Instruments," *Analytical Chemistry,* 44:721, 1972.

Bradley, H. J. and Tsai, L. S., *Amperometric Titration of Chlorine with a Modified pH Meter,* Washington, D.C.: U.S. Department of Agriculture, 1999.

Bretherick, L., *Bretherick's Handbook of Reactive Chemical Hazards,* Stoneham, ME: Butterworth-Heinemann, 1999.

Buonauito, R. P., "Oxygen Analyzers," *Measurements and Control,* February 1990.

Cali, G. V., "Improvements in pH Control and Dissolved Oxygen Instrumentation for Industrial and Municipal Waste Treatment," Conference on Application of U.S. Pollution Control Technology in Korea, Seoul, Korea, March 22, 1989.

Cardis, T. M., "Managing Data from Continuous Analyzers," 1992 ISA Conference, Houston, TX, October 1992.

Clark, K., "Chlorine Analyzers Cut Costs, Improve Performance," *InTech,* May 1998.

Evans, R., *Potentiometry and Ion Selective Electrodes,* New York: John Wiley & Sons, 1987.

Flato, J., "The Renaissance in Polarographic and Voltametric Analysis," *Analytical Chemistry,* 44:75A, 1972.

Galster, H., *pH Measurement: Fundamentals, Methods, Applications, Instrumentation,* VCH, Weinheim, Germany, 1991.

Gray, J. R., "Glass pH Electrode Aging Characteristics," ISA/93 Technical Conference, Chicago, September, 1993.

Hitchman, M. L., *Measurement of Dissolved Oxygen,* New York: John Wiley & Sons, 1978.

Kissinger, P. T. and Heinemann, W. R., *Laboratory Techniques in Electro-Analytical Chemistry,* New York: Marcel Dekker, 1984.

NIOSH, *NIOSH Manual of Analytical Methods: Supplement,* 4th ed., 2 vols., Bpi Information Services, London, 1996.

Riley, T. et al., *Principles of Electroanalytical Methods,* 1987.

Skoog, D. A., *Principles of Instrumental Analysis,* Pacific Grove, CA: Brooks/Cole Publishing, 1997.

Standard Methods for the Examination of Water and Wastewater, New York: APHA, AWWA, and WPCF, latest edition.

Wang, H. Y., "Transient Measurement of Dissolved Oxygen Using Membrane Electrodes," *Biosensors,* 4(5):273–285, 1989.

Weiss, M. D., "Teaching Old Electrodes New Tricks," *Control,* July 1991.

© 2003 by Béla Lipták

8.5 Air Quality Monitoring

R. A. HERRICK, R. G. SMITH (1974) **B. G. LIPTÁK** (1995, 2003)

Costs: A battery-operated adjustable-flow air sampling pump costs $500; equipment costs for an audit system might include $6000 for an ozone analyzer, $10,000 for a CO analyzer, $6000 for a pure air generator, $1500 for a methane reactor, and $15,000 for a gas calibrator; a microprocessor-based portable infrared spectrometer with preprogrammed multicomponent identification capability and with space for 10 user-defined standards for calibration, an AC/DC converter, a sample probe, and a carrying case costs $17,000.

Partial List of Suppliers:
AMC (Armstrong Monitoring Corp.) (www.armstrongmonitoring.com)
Ametek/Thermox (www.thermox.com)
Bran & Luebbe (www.branluebbe.com)
Dasibi Environmental Corp. (www.dasibi.com)
Delphian Corp. (www.delphian.com)
Ecotech (www.ecotech.com.au)
EMS (Environmental Monitoring Systems) (www.emssales.com)
Enviro Technology (www.et.co.uk)
Foxboro-Invensys (www.foxboro.com)
Horiba Instrument Inc. (www.nettune.net)
Innova Air Tech Instruments (www.inniva.dk)
International Sensor Technology (www.intlsensor.com)
IT Group (www.theitgroup.com)
MSA Instrument Div. (www.msanet.com)
Purafil Inc. (www.purafilonguard.com)
Sensidyne Inc. (www.sensidyne.com)
Servomex Co. (www.servomex.com)
Sieger Gasalarm; Siemens Energy & Automation (www.sea.siemens.com)
Sierra Monitor Corp. (www.sierramonitor.com)
Sigrist-Photometer Ltd. (www.photometer.com)
Teledyne Analytical Instruments (www.teledyne-ai.com)
Thermo Environmental Instruments (www.thermoei.com)
Thermo Gas Tech (www.thermo.com)
Yokogawa Corp. of America (www.yca.com)

INTRODUCTION

This section covers the monitoring of ambient air quality. Air sampling is discussed, but the same subject is also covered in more detail in Section 8.2. Particulate and opacity monitoring are not covered here, as those topics are discussed in a later section in this chapter.

This section starts with a general discussion of air quality monitoring systems and continues with a description of air quality detecting sensors, automatic monitoring packages, and microprocessor-based portable ambient air analyzers. The section is concluded with a discussion of ambient air sampling for both gases and particulate matter.

AIR QUALITY MONITORING SYSTEMS

There are many options for the types of air quality information that can be collected, and the cost of air quality monitoring systems can vary by orders of magnitude. Only with a thorough understanding of the decisions that must be made based on the information received from the air quality monitoring system can an appropriate selection be made. Regardless of the type of instruments used to measure air quality, the data are only as good as they are representative of the sampling site selected. See Table 8.5a for a list of air quality and meteorological parameters and their measurement ranges, accuracy, and method of analysis.

© 2003 by Béla Lipták

TABLE 8.5a
Ambient Air Monitoring and Meteorological Measurement Parameters

Compound	*Range*	*Accuracy*	*Technique Employed*
Oxides of nitrogen	0–20 ppm	0.5 ppb	Chemiluminescence or DOAS open path
Sulfur dioxide	0–20 ppm	0.5 ppb	Fluorescence dual-channel ratiometric phase detection or DOAS open path
Ozone	0–20 ppm	0.5 ppb	Ultraviolet photometrics or DOAS open path
Carbon monoxide	0–200 ppm	50 ppb	Gas filter correlation or DOAS open path
Carbon dioxide	0–100%	50 ppb	Gas filter correlation or DOAS open path
Benzene, toluene, xylene	0–5 ppm	0.5 ppb	Gas chromatography or DOAS open path
Nonmethane hydrocarbons	0–1000 ppm	0.01 ppm	FID or DOAS open path
Methane	0–1000 ppm	0.01 ppm	FID or DOAS open path
Particulates (PM10, TSP, PM2.5)	0–5 g/m^3	0.1 $\mu g/m^3$	Tapered element oscillating microbalance
Carbon particulates	0–5 g/m^3	0.25 $\mu g/m^3$	Thermal CO_2 method
Local visual distance	0–16 km	±10%	Nephelometer
Wind speed	0–70 m/sec	0.22 m/sec	Anemometer
Wind direction	0–540°	±3°	Airfoil vane
Ambient temperature	–50 to 100°C	±0.1°C	Solid state thermistor
Relative humidity	0–100%	±2%	Thin film capacitor
Barometric pressure	800–1200 mbar	±1.3 mbar	Solid state transducer
Precipitation	NA	0.1 mm	Net radiometer
Solar radiation	250–2800 nm	9 mV/kWm^2	Pyranometer
Net radiation	250–60000 nm	8 mV/kWm^2	Net radiometer

Note: NA = not applicable; FID = flame ionization detector.

Source: Courtesy of Ecotech.

The simplest air quality monitors are static sensors, which are exposed for a given length of time and are later analyzed in the laboratory. In some cases, these devices provided all the information required. More commonly, a system of automatic instruments measuring several different air quality parameters will be used. With more than a few instruments, the signals from these instruments can be retained on magnetic tape rather than on recorder charts.

The most common errors in the design of air quality monitoring systems are poor site location and the acquisition of more data than necessary to accomplish the purpose of the installation.

Purpose of Monitoring

The principle purpose of air quality monitoring is frequently the acquisition of data for comparison to regulated standards. In the U.S., standards have been promulgated by the federal government[1] and by many of the states. Where possible, these standards have been based on the physiological effect of the air pollutant in question, so that human health is protected. The averaging time over which various concentration standards must be maintained is different for each pollutant. Tables 8.5b and 8.5c are tabulations of the ambient air quality standards promulgated by the federal government.

Impact of Single Sources

Some air quality monitoring systems are operated to determine the impact of a single source or a concentrated group of sources of emission on the surrounding area. In this case, it is important to determine the background level, the maximum ground-level concentration in the area, and the geographical extent of the air pollutant impact of the source. When the source is isolated, such as a single industrial plant in a rural area, the design is straightforward. Utilizing meteorological records, which are normally available from nearby airports or from government meteorological reporting stations, a wind rose can be prepared to estimate the direction of principal drift of the air pollutant from the source.

Dispersion calculations can be performed to estimate the location of the expected point of maximum ground-level concentration. As a rule of thumb, with stacks between about 50 and 350 ft tall, this point of maximum concentration will be approximately 10 stack heights downwind. The air quality monitoring system should include at least one sensor at the point of expected maximum ground-level concentration. Additional sensors should be placed not less than 100 stack heights upwind (prevailing) to provide a background reading, and at least two or three sensors should be placed between 100 and 200 stack heights downwind to determine the extent

© 2003 by Béla Lipták

TABLE 8.5b
Primary Air Quality Standards[a]

Pollutant	*Long-Term Concentration Level*($\mu g/m^3$)	*Short-Term Concentration Level*[b]($\mu g/m^3$)
Particulate matter	75—annual geometric mean	260—maximum 24-h concentration
Sulfur oxides (SO_2)	80 (0.03 ppm)—annual arithmetic mean	365 (0.14 ppm)—maximum 24-h concentration
Carbon monoxide	—	10,000 (9 ppm)—maximum 8-h concentration or 40,000 (35 ppm)—maximum 1-h concentration
Photochemical oxidants	—	160 (0.08 ppm)—maximum 1-h concentration
Hydrocarbons	—	160 (0.24 ppm)—maximum 3-h concentration (6–9 A.M.)
Nitrogen dioxide	100 (0.05 ppm)—mean arithmetic mean	

[a]Levels of air quality that are deemed necessary, with an adequate margin of safety, to protect the public health.
[b]Stated concentration not to be exceeded more than once per year.

TABLE 8.5c
Secondary Air Quality Standards[a]

Pollutant	*Long-Term Concentration Level*($\mu g/m^3$)	*Short-Term Concentration Level*[b]($\mu g/m^3$)
Particulate	60—annual geometric mean	150—maximum 24-h concentration
Sulfur dioxide	60 (0.02 ppm)—annual arithmetic mean	260 (0.1 ppm)—maximum 24-h concentration
Carbon monoxide	—	10,000 (9 ppm)—maximum 8-h concentration or 40,000 (35 ppm)—maximum 1-h concentration
Photochemical oxidants	—	160 (0.08 ppm)—maximum 1-h concentration
Hydrocarbons	—	160 (0.24 ppm)—maximum 3-h concentration (6–9 A.M.)
Nitrogen dioxide	100 (0.05 ppm)—maximum arithmetic mean	—

[a]Levels of air quality that are deemed adequate to protect the public welfare from any known or anticipated adverse effects.
[b]Stated concentration not to be exceeded more than once per year.

of the travel of the pollutants from the source in question. If adequate resources are available, sampling at the intersection points of a rectilinear grid with its center at the source in question is advisable.

With such a system for an isolated source, adequate data can be obtained in 1 year to determine the impact of the sources on the air quality of the area. There are very few instances where less than 1 year of data collection will provide adequate information because of the variability in climatic conditions on an annual basis. If a study of this type is performed to determine the effect on air quality of process changes, it may be necessary to continue the study for 2 to 5 years to develop information that is statistically reliable.

Some air quality monitoring is designed for the specific purpose of investigating complaints concerning an unidentified source. This usually happens in urban situations for odor complaints. In these cases, a triangulation technique is used. By the use of this technique, human observers over a period of days can correlate the location of the observed odor and the direction of the wind. Plotting on a map can pinpoint the offending source in most cases. While this is not an air pollution monitoring system in an instrumental sense, it is a useful tool in certain situations.

Research Needs The research needs of air pollution call for a completely different approach to air quality monitoring. Here, the purpose is to define some known variable or combination of variables. This can be either a new atmospheric phenomenon or the evaluation of a new air pollution sensor. In the former case, the most important consideration is the proper operation of the instrument used. In the latter case, the most important factor is the availability of a reference determination against which the results of the new instruments can be compared.

Monitoring in Urban Areas

Urban situations are the areas of major interest in air pollution in the U.S., since most of the population lives in urban areas. The most sophisticated and expensive air quality monitoring systems in the U.S. are those of large cities (and one or two

© 2003 by Béla Lipták

of the largest states) where data collection and analysis are centralized at a single location through the use of telemetry. On-line computer facilities provide data reduction.

Three philosophies can be utilized in the design of an urban air quality monitoring system: 1) using location of sensors on a uniform area basis (rectilinear grid); 2) installing location of sensors in areas where pollutant concentrations are expected to be high; and 3) installing location sensors in proportion to population distribution. The operation of these systems is nearly identical, but the interpretation of the results can be radically different.

The most easily designed systems are those where the sensors are located uniformly on a geographical basis according to a rectilinear grid. Adequate coverage of an urban area frequently requires at least 100 sensors, so this concept is usually applied only with static or manual methods of air quality monitoring.

The location of air quality sensors at points of maximum concentration indicates the highest levels of air pollutants that are encountered throughout the area. Typically, this will include the central business district and the industrial areas on the periphery of the community. Data of this type are extremely useful when interpreted in the context of total system design. One or two sensors are usually placed in clean or background locations, so the average concentration of air pollutants over the entire area can be estimated. The basis of this philosophy is that if the concentrations in the dirtiest areas are below the air quality standards, there will certainly be no problem in the cleaner areas.

The design of air quality monitoring systems based on population distribution calls for the placement of air quality sensors in the most populous areas. While this may not include all the high-pollutant-concentration areas in the urban region, it generally encompasses the central business district and is a measure of the levels of air pollutants to which the bulk of the population is exposed. The average concentrations from a sampling network of this type are an adequate description from a public health standpoint. However, this system design may miss some localized high-concentration areas.

Agreement on the purpose of air quality monitoring must be reached between the system designer and those responsible for interpreting the data before the system is designed.

Sampling Site Selection

Once the initial layout has been developed for an air quality monitoring system, specific sampling sites must be located as close as practical to the ideal locations. The major considerations are the lack of obstruction from local interference and the adequacy of the site to represent the air mass of interest, accessibility, and security.

Local interference can cause major disruptions to air quality sensor sites. A sampler inlet placed at a sheltered interior corner of a building is most undesirable because of poor air motion. Tall buildings or trees immediately adjacent to the sampling site can also invalidate most readings.

The selection of sampling sites in urban areas is complicated by the canyon effect of streets and by the high density of pollutants, both gaseous and particulate, immediately at street level. In order to be representative of the air mass to be sampled, the purpose of the study must again be reviewed. If the data are to be collected for the determination of area-wide pollutant averages, it may be best to locate the sampler inlet in a city park, vacant lot, or other completely open area. If this is not possible, the sampler inlet could be at the roof level of a one- or two-story building so that street-level effects could be minimized. On the other hand, if the physiological impact of the air pollutants is a prime consideration, the samplers should be at or near the breathing level of the people exposed. As a rule of thumb, an elevation of 3 to 6 m above-ground is suggested as optimum.

Sampling site location can be different for the same pollutant depending upon the purpose of the sampling. Carbon monoxide sampling is an example. The federally promulgated air quality standards for carbon monoxide include both an 8- and 1-h concentration limit. Maximum 1-h concentrations are likely to be found in a high-traffic-density center-city location. It is unlikely that people would ordinarily be exposed to these concentrations for 8-h periods. When sampling for comparison with the 1-h standard, the sensor should be located within about 20 ft of a major traffic intersection. When sampling for comparison with the 8-h standard, the sensor should be located near a major thoroughfare in either the center-city area or the suburban area, with the sample less than about 50 ft from the intersection.

The purpose for two different locations of sampling sites is to be consistent with the physiological effects noted from carbon monoxide exposure and with the living pattern of the bulk of the population. If only one site can be selected, the location described for the 8-h averaging time is preferred.

When the sampling instruments are located inside a building and an air sample is to be drawn in from the outside, it is frequently advantageous to utilize a sampling pipe with a small blower to bring outside air to the instrument inlets. This improves sampler line response time. An air velocity of approximately 700 ft/min in the pipe is a good choice to balance the problems of gravitational and inertial deposition of particular matter, where particulates are to be sampled.

The sampling site should be accessible to the operation and maintenance personnel. Since most air pollution monitoring sites are unattended much of the time, sample site security is a very important consideration; the risk of vandalism is high in many areas.

Static Methods of Air Monitoring

Minimum capital cost is attained when static sensors are used to monitor air quality. While averaging times are in terms of weeks and sensitivity is frequently low, there are many cases where static monitors provide the most information for the amount of investment. They should not be rejected out of

© 2003 by Béla Lipták

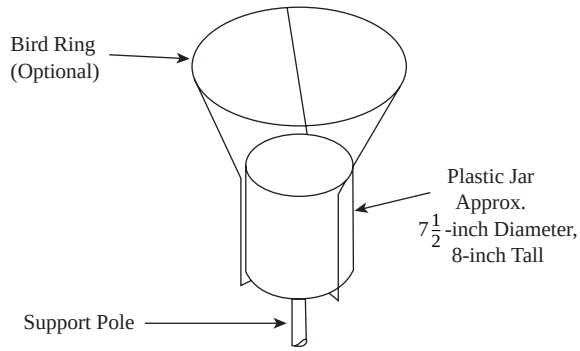

FIG. 8.5d
Dust-fall jar.

hand, but should be considered as useful adjuncts to more sophisticated systems.

Dust-Fall Jars The simplest of all air quality monitoring devices is the dust-fall jar (Figure 8.5d). This device measures the fallout rate of coarse particulate matter, generally above about 10 microns in size. Dust-fall and odor are two of the major reasons for citizen complaints concerning air pollution. Dust-fall is offensive because it builds up on porches, automobiles, and such, and it is highly visible and gritty to walk upon.

Dust-fall seldom carries for distances in excess of $\frac{1}{2}$ mi because these large particles are subject to strong gravitational effects. For this reason, dust-fall stations must be more closely spaced than other air pollution sensors, if detailed study of an area is desired.

Dust measurements conducted in large cities in the U.S. in the 1920s and 1930s commonly indicated dust-fall rates in hundreds of tons per square mile per month. These levels would be considered excessive today, as evidenced by the dust-fall standards of 25 to 30 tons/mi^2/month promulgated by many of the states. While the measurement of low or moderate values of dust-fall does not indicate freedom from air pollution problems, measured dust-fall values in excess of 50 to 100 tons/mi^2/month in an area are a sure indication of the existence of excessive air pollution.

The large size of the particulate matter found in dust-fall jars makes it amenable to chemical analysis or to physical analysis by such techniques as microscopy. These analyses can be useful to identify specific sources.

Lead Peroxide Candles For many years, lead peroxide candles had been used in measuring the concentration of sulfur dioxide. These devices are known as candles because they are a mixture of lead peroxide paste spread on a porcelain cylinder that is about the size and shape of a candle. They are normally exposed to the ambient air in the location of interest for 1 month. Sulfur gases in the air react with lead peroxide to form lead sulfate. Sulfate is analyzed according to standard laboratory procedures to give an indication of the atmospheric levels of sulfur gases during the period of exposure.

The laboratory procedure can be simplified by a modification of this technique, which uses a fiber filter cemented to the inside of a plastic petri dish (a flat-bottom dish with shallow walls, used for biological cultures). The filter in the dish is saturated with an aqueous mixture of lead peroxide and a gel (commonly gum tragacanth) and is allowed to dry. These dishes, or plates, are exposed to the ambient air in an inverted position for 1 to 4 weeks.

Lead peroxide estimation of sulfur dioxide suffers from inherent weakness. All sulfur gases, including reduced sulfur, react with lead peroxide to form lead sulfate. More importantly, the reactivity of lead peroxide is dependent upon its particle size distribution. For this reason, the results from different investigators are not directly comparable. Nevertheless, a network of lead peroxide plates over an area provides a good indication of the relative exposure to sulfur gases during the particular exposure period. This is useful for determining the geographical extent of sulfur pollution.

Other Static Methods The use of a fiber filter cemented to a petri dish has been modified by the use of sodium carbonate rather than lead peroxide for the measurement of sulfur gases. This method also shows some success in indicating the relative concentration of other gases, including nitrogen oxides and chlorides. Relative levels of gaseous fluoride air pollution have been measured using larger filters, e.g., 3 in. in diameter, dipped in sodium carbonate, and placed in shelters to protect them from the rain. With all these static methods, the accuracy is extremely low and the data cannot be converted directly into ambient air concentrations. They do, however, provide a low-cost indicator of relative levels of pollution in a given area.

The corrosive nature of the atmosphere has been evaluated, using standardized steel exposure plates for extended periods to measure the corrosion rate. This provides a gross indication of the corrosive nature of the atmosphere. As with other static samplers, the results are not directly related to the concentration of air pollutants.

Laboratory Analyses

Manual analyses for air quality measurements are those that require the simple to first be collected and then analyzed in the laboratory. Manual instruments provide no automatic indication of pollution levels.

The manual air sampling instrument, which is in widest use, is the high-volume sampler shown in Figure 8.5e. With this method, ambient air is drawn through a preweighed filter at a rate of approximately 50 ACFM for 24 h. The filter is then removed from the sampler, returned to the laboratory, and weighed. The gain in weight, in combination with the measured air volume through the sampler, allows for the calculation of particulate mass concentration, expressed in micrograms per cubic meter.

Reference methods for nearly all gaseous air pollutants involve the use of a wet sampling train in which air is drawn

© 2003 by Béla Lipták

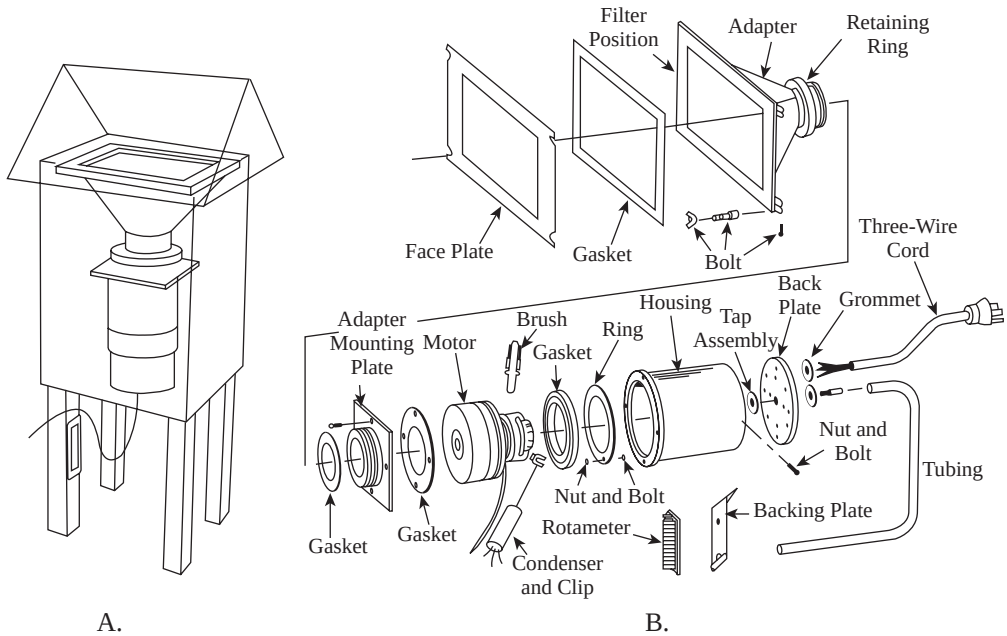

FIG. 8.5e

The high-volume air sampler. (A) Illustrates the assembled sampler and its shelter. (B) Shows the components of a typical high-volume air sampler.

through a collecting medium for some period of time. The exposed collecting medium is then returned to the laboratory for chemical analysis. Sampling trains have been developed that allow the sampling of five or more gases simultaneously in separate bubblers. There are also sequential samplers, which automatically divert the airflow from one bubbler to another at preset time intervals.

These methods of sampling can be accomplished with a modest initial investment, but the manpower required to distribute and pick up the samples and to analyze them in the laboratory raises the total cost to a point where automated systems may be more economical for long-term studies.

AUTOMATIC MONITORING

As the need for accurate data that can be statistically reduced in a convenient manner becomes more the rule than the exception, automated sampling systems become more and more desirable. The elements of an automated system include the airflow handling system, the sensors, the data transmission storage and display apparatus, and the data processing facility. The overall system is no more valuable than the weakest link of this chain.

Sensors

Some of the sensor categories used have been listed in Table 8.5a. The detectors that are available to measure the various individual air pollutants are discussed in other sections of this chapter.

The reliability of the output from an air quality sensor is dependent upon its inherent accuracy, sensitivity, zero drift, and calibration. The inherent accuracy and sensitivity are a function of the design of the instrument and of the principle upon which it operates. Zero drift can be either an electronic phenomenon or an indication of difficulties with the instrument. In those instruments using an optical path, lenses can become dirty. In wet chemical analyzers, the flow rates of reagents can vary, causing a change in both the zero and the span (range) of the instrument. Because of these potential problems, every instrument should have routine field calibration at an interval determined in field practice to be reasonable for the sensor.

The calibration of an air quality sensor is frequently accomplished using either a standard gas mixture or a prepared, diluted gas mixture using permeation tubes. In some cases, the airstream entering the sensor is concurrently sampled by a reference wet chemical technique.

The operator of air quality sensors should always have an adequate supply of spare parts and tools so that downtime can be held to a minimum. Operator training should, at a minimum, include instruction to recognize the symptoms of equipment malfunction and vocabulary to describe the symptoms to the individual responsible for instrument repair. Ideally, each operator would receive a short training session from the instrument manufacturer or someone trained in the use and maintenance of the instrument, so that he or she can make repairs on-site. Since this is seldom possible in actual practice, the recognition of symptoms of malfunction becomes increasingly important.

Data Transmission

The output signal from a continuous monitor used in an air quality monitoring system is typically the input to a strip-chart recorder, magnetic tape data storage, or an on-line data

© 2003 by Béla Lipták

transmission bus or highway system. If the output of the air quality transmitter is in analog form, it is suitable for direct input to a strip-chart recorder, but it has to be converted into a digital signal before it can be sent over a data highway. In the case of sensors with a logarithmic output, it may be desirable to first convert this signal into a linear form.

Many of the first automated air quality monitoring systems in the U.S. experienced major difficulties with their data transmission systems. In some cases, this was caused by attempts to overextend the lower range of the sensors, which resulted in an unfavorable signal-to-noise ratio. In other cases, the matching of sensor signal output to the data transmission system was poor. With developments of the new data highway protocols, these early difficulties have been overcome.

Continuous detectors tend to increase the complexity of the air quality monitoring systems, but data from the continuous monitors can be stored on magnetic tape for later processing and statistical reduction. In case of an on-line system, this can be done instantaneously. When decisions with substantial community impact must be made within a very short time, this real-time capability is likely to be necessary.

Data Processing

The concentration of many air pollutants has been found to follow a lognormal rather than a normal distribution. In a lognormal distribution, a plot of the logarithm of the measured value more closely approximates the bell-shaped Gaussian distribution curve than does a plot of the numerical data. Suspended particulate concentrations are a prime example of this type of distribution.

When this is the case, the geometric mean is the statistical parameter that best describes the population of data. The arithmetic mean is of limited value because it is dominated by a few occurrences of high values. The geometric mean, in combination with the geometric standard deviation, is a complete description of a frequency distribution for a lognormally distributed pollutant.

Averaging Times The averaging time over which the sample results are reported is a consideration in the processing and interpretation of air quality data. For sulfur dioxide, air quality standards have been promulgated by various agencies based on annual, monthly, weekly, 24-h, 3-h, and 1-h arithmetic average concentrations.

The output of a continuous analyzer can be averaged over nearly any discrete time interval. In order to reduce the computation time, the time interval over which the continuous analyzer output is averaged to obtain a discrete input for the calculations must be considered. If a 1-h average concentration is the shortest time interval of value in interpreting the study results, it is not economical to use a 1- or 2-min averaging time for inputs to the computation program.

Displays Caution must be exercised in using strip-chart recorders for the acquisition of air quality data. The experience of many organizations, both governmental and industrial, is that the reduction of data from strip charts is a tedious chore at best. Many organizations have decided that they did not really need all that data in the first place, once they find a large backlog of unreduced strip charts. Two cautions are suggested by this experience. First, if you do not plan to use the data, do not collect it. Second, be aware of the advantages of magnetic tape data storage followed by computer processing.

The visual display of air quality data has considerable appeal to many nontechnical personnel. Long columns of numbers can be deceptive if only one or two important trends are to be shown. The use of bar charts or graphs is frequently advantageous, even though they do not show the complete history of the air quality over the time span of interest.

Audits

Periodic performance audits are required to validate the accuracy of the air monitoring system. The Code of Federal Regulations (CFR) requires that performance audits be conducted at least once a year for criteria pollutant analyzers operated at State and Local Air Monitoring Stations (SLAMS). The U.S. Environmental Protection Agency (EPA) recommends that each analyzer be disconnected from the monitoring station manifold and be individually connected to the audit, from which it will receive the audit gas of known concentration.

The audit gas concentrations are usually generated in a van, using a gas calibrator to dilute multiblend gases with zero air. Each state approaches air pollution monitoring differently. The California Air Resources Board (CARB), for example, has been conducting through-the-probe performance audits of continuous ambient air analyzers since 1981. CARB has the responsibility of overseeing the implementation of the California Clean Air Act and the Federal Clean Air Act in California.

Automatic Analyzers

The automatic sampling train (AST) packages have been described in Section 8.3. They can automate any of the U.S. EPA Methods or international methods specified by VDI, BS, or ISO. In these packages the microprocessor stores all measurements, diagnoses all inputs, controls the manipulated variables, calculates isokinetic conditions, and reports the results in either a printed form or over the data bus.

Infrared Spectrometers Microprocessor-controlled spectrometers are also available to measure the concentrations of a variety of gases and vapors in ambient air. These units can be portable or permanently installed and can serve compliance with environmental and occupational safety regulations. In the infrared spectrometer design, the ambient air is drawn into the test cell by an integral air pump, operating at a flow rate of 0.88 ACFM (25 l/min).

The microprocessor selects the appropriate wavelengths for the components of interest, and the filter wheel in the

© 2003 by Béla Lipták

analyzer allows the selected wavelengths to pass through the ambient air sample in the cell. The microprocessor automatically adjusts the path length through the cell to give the required sensitivity. Because of the folded path length design, the path length can be increased to 20 m (60 ft), and the resulting measurement sensitivity can be better than 1 ppm in many cases.

As shown in Table 8.5f, practically all organic and also some of the inorganic vapors and gases can be monitored by these infrared spectrometers. The advantage of the microprocessor-based operation is that the monitor is precalibrated for the analysis of over 100 Occupational Safety and Health Administration (OSHA)-cited compounds. The memory capacity of the microprocessor is sufficient to accommodate another 10 user-selected and user-calibrated gases.

Analysis time is minimized because the microprocessor automatically sets the measurement wavelengths and parameters for any of the compounds in its memory. A general scan for contaminant in the atmosphere takes about 5 min, while the analysis of a specific compound can be completed in just a few minutes. The portable units are battery operated for 4 h of continuous operation and are approved for use in hazardous areas.

Handheld Indoor Air Quality Monitors Battery-operated, handheld indoor air quality (IAQ) monitors are available for monitoring the air quality in schools, offices, meeting rooms, and greenhouses, and to service heating, ventilation, and air conditioning (HVAC) systems. These units monitor and record the temperature (range: 0 to 50°C = 32 to 122°F), relative humidity (range: 0 to 100%), and the concentration of different selected gases. Plug-in sensors are available for gases, such as CO_2, with a range of 0 to 10,000 ppm.

Dual-beam infrared radiation is used for making the measurement. The sample flow is drawn by diffusion or is maintained at 100 to 300 ml/m. Sample rates are adjustable from 10 sec to one per day, and data loggers are also available with capacities for up to 50,000 samples.

SAMPLING OF AMBIENT AIR

The sampling of process gases and vapors has been discussed in Section 8.2, and some of that discussion is also applicable to ambient air monitoring. Yet ambient air sampling is sufficiently different to justify a separate discussion in addition to what has already been said.

All substances in the ambient air exist as either particulate matter or gases and vapors. In general, the distinction is easily made; gases and vapors consist of substances dispersed as molecules in the atmosphere, while particulate matter consists of aggregates of molecules sufficiently large that they are said to behave like particles. Particulate matter (or particulates) are filterable, may be precipitated, and, in still air, may be expected to settle out. By contrast, gases and vapors do not behave in this fashion and are homogeneously mixed with the air molecules.

A substance such as carbon monoxide may exist only as a gas; an inorganic compound like iron oxide may exist only as a particle. Many substances may exist as either particles or vapors, however; additionally, substances that are gases can also be attached by some means to the particulate matter in the air. If sampling is to be intelligently conducted, prior knowledge of the physical state in which a substance exists must be available or else a judgment must be made. Particulate matter, opacity, dust, and smoke analyzers are discussed in a separate section in this chapter. They do not usually collect gases or vapors; hence, an incorrect selection of sampling method may lead to erroneous results. Fortunately, a considerable body of experience has evolved concerning the more common pollutants, and it is not difficult in most cases to select a sampling method reasonably suitable for the substances of interest.

General Air Sampling Problems

Certain general observations relative to sampling ambient air must be recognized. For example, the quantity of a given substance contained in a volume of air is likely to be extremely small, and it will necessitate a sample of sufficient size for the analytical method employed to be adequate. Even air, which is heavily polluted, is not likely to contain more than a few milligrams per cubic meter of most contaminants and, more frequently, the amount present will best be measured in micrograms, or even nanograms, per cubic meter.

Consider, for example, the air quality standard for particulates, which is 75 g/m^3. A cubic meter of air, or 35.3 ft^3, is a relatively large volume for many sampling devices, and a considerable sampling period may be required to draw such a quantity of air through the sampler. If atmospheric mercury analyses are to be attempted, then it must be realized that background levels are likely to be as low as several nanograms per cubic meter and, in general, most substances tend to be of concern at quite low levels in the ambient air.

In addition to problems arising from the low concentrations of substances being sampled, other problems include those caused by the reactivity of the substances, changes after collection, and necessitating special measures to minimize such changes.

Whenever something is removed from a volume of air by sampling procedures, some alteration of the substance of interest may taken place and analysis may be less informative than desired, or may even be misleading. Therefore, it would be ideal to perform analyses of the unchanged atmosphere if possible, using direct-reading devices, which could give accurate information concerning the chemical and physical states of contaminants as well as concentration information. Such instruments do exist for some substances, and many more are being developed, but conventional air sampling methods are still used in many instances and doubtlessly will continue to be required for some time to come.

© 2003 by Béla Lipták

TABLE 8.5f
Compounds That Can Be Analyzed by the Microprocessor-Controlled Portable Infrared Spectrometer

Compound	*Range of Calibration* (ppm)	*Compound*	*Range of Calibration* (ppm)
Acetaldehyde	0–400	Ethane	0–1000
Acetic acid	0–50	Ethanolamine	0–100
Acetone	0–2000	Fluorotrichloromethane (Freon 11)	0–2000
Acetonitrile	0–200	Formaldehyde	0–20
Acetophenone	0–100	Formic acid	0–20
Acetylene	0–200	Halothane	0–20
Acetylene tetrabromide	0–200	Heptane	0–10 and 0–100
Acrylonitrile	0–20 and 0–100	Hexane	0–1000
Ammonia	0–100 and 0–500	Hydrazine	0–1000
Aniline	0–20	Hydrogen cyanide	0–100
Benzaldehyde	0–500	Isoflurane	0–10 and 0–100
Benzene	0–50 and 0–200	Isopropyl alcohol	0–1000 and 0–2000
Benzyl chloride	0–100	Isopropyl ether	0–1000
Bromoform	0–10	Methane	0–100 and 0–1000
Butadiene	0–2000	Methoxyflurane	0–10 and 0–100
Butane	0–200 and 0–2000	Methyl acetate	0–500
2-Butanone (MEK)	0–250 and 0–1000	Methyl acetylene	0–1000 and 0–5000
Butyl acetate	0–300 and 0–600	Methyl acrylate	0–50
n-Butyl alcohol	0–200 and 0–1000	Methyl alcohol	0–500 and 0–1000
Carbon dioxide	0–2000	Methylamine	0–50
Carbon disulfide	0–50	Methyl bromide	0–50
Carbon monoxide	0–100 and 0–250	Methyl cellosolve	0–50
Carbon tetrachloride	0–20 and 0–200	Methyl chloride	0–200 and 0–1000
Chlorobenzene	0–150	Methyl chloroform	0–500
Chlorobromomethane	0–500	Methylene chloride	0–1000
Chlorodifluoromethane	0–1000	Methyl iodide	0–40
Chloroform	0–100 and 0–500	Methyl mercaptan	0–100
m-Cresol	0–20	Methyl methacrylate	0–250
Cumene	0–100	Morpholine	2–50
Cyclohexane	0–500	Nitrobenzene	0–20
Cyclopentane	0–500	Nitromethane	0–200
Diborane	0–10	Nitrous oxide	0–100 and 0–2000
m-Dichlorobenzene	0–150	Octane	0–100 and 0–1000
o-Dichlorobenzene	0–100	Pentane	0–1500
p-Dichlorobenzene	0–150	Perchloroethylene	0–200 and 0–500
Dichlorodifluoromethane (Freon 12)	0–5 and 0–800	Phosgene	0–5
1,1-Dichloroethane	0–200	Propane	0–2000
1,2-Dichloroethylene	0–500	*n*-Propyl alcohol	0–500
Dichloroethyl ether	0–50	Propylene oxide	0–200
Dichloromonofluoroethane (Freon 21)	0–1000	Pyridine	0–100
Dichlorotetrafluoromethane (Freon 114)	0–1000	Styrene	0–200 and 0–500
Diethylamine	0–50	Sulfur dioxide	0–100 and 0–250
Dimethylacetamide	0–50	Sulfur hexafluoride	0–5 and 0–500
Dimethylamine	0–50	1,1,2,2-Tetrachloro 1,2-difluoroethane (Freon 112)	0–2000
Dimethylformamide	0–50	1,1,2,2-Tetrachloroethane	0–50
Dioxane	0–100 and 0–500	Tetrahydrofuran	0–500
2-Ethoxyethyl acetate	0–200	Toluene	0–1000
Ethyl acetate	0–400 and 0–1000	Total hydrocarbons	0–1000
Ethyl alcohol	0–1000 and 0–2000	1,1,2-Trichloroethane	0–50
Ethylbenzene	0–200	Trichloroethylene	0–200 and 0–2000
Ethyl chloride	0–1500	1,1,2-Trichloro 1,2,2-trifluoroethane (Freon 113)	0–2000
Ethylene	0–100		
Ethylene dibromide	0–10 and 0–50		
Ethylene dichloride	0–100		
Ethylene oxide	0–10 and 0–100		
Ethyl ether	0–1000 and 0–2000		
Enflurane	0–10 and 0–100		

© 2003 by Béla Lipták

TABLE 8.5f Continued
Compounds That Can Be Analyzed by the Microprocessor-Controlled Portable Infrared Spectrometer

Compound	*Range of Calibration* (ppm)	*Compound*	*Range of Calibration* (ppm)
Trifluoromonobromomethane (Freon 13B1)	0–1000	Vinylidene chloride	0–20
		Xylene (xylol)	0–200 and 0–2000
Vinyl acetate	0–1000		
Vinyl chloride	0–10		

Sampling for Gases and Vapors

The simplest method of collecting a sample of air for subsequent analysis is to fill a bottle or other rigid container with it or, more conveniently, to use a bag made of suitable material. Although it may be relatively easy to sample by this method, the sample size is distinctly limited, and it may not be possible to collect a sufficiently large sample to permit subsequent analysis. Bottles larger than several liters in capacity are awkward to transport, and while bags of any size are conveniently transported when empty, they may be difficult to deal with when inflated. Nevertheless, it may prove more convenient to collect a number of samples in small bags than to take more complex sampling apparatus to a number of sampling sites. If it is possible to analyze for the contaminant of interest by means of gas chromatographic procedures, or by gas phase infrared spectroscopy, for example, then samples as small as a liter or less may be adequate and can be quickly and easily collected by bags.

There are several methods of filling rigid containers such as a bottle. One is to evacuate the bottle beforehand and then fill it at the sampling site by drawing air into the bottle and sealing it again (Figure 8.5g). Alternatively, a bottle may be filled with water, which is then allowed to drain and fill with the air. A third method consists of passing a sufficient amount of air through the bottle by using a pumping device until the original air is completely displaced by the air being sampled.

Plastic bags are frequently filled by means of a simple, hand-operated squeeze bulb with values on each end (Figure 8.5g) and then connected to a piece of tubing attached to the sampling inlet of the bag. In most cases, this procedure is satisfactory, but care should be taken to avoid contamination of the sampled air by the sampling bulb or possible losses of the constituent on the walls of the sampling bulb. To avoid problems of this kind, it is possible to place the bag in a rigid container such as a box and then withdraw air from the box so that a negative pressure is created, which results in air being drawn into the bag.

Bag materials must be selected with care, for some will permit losses of contaminants by diffusion through the walls, and others to the air being sampled. A number of polymers have been studied, and several have been found to be suitable for air sampling purposes. Materials suitable for use as sampling bags include Mylar, Saran, Scotchpak (a laminate of polyethylene, aluminum foil, and Teflon), and Teflon.

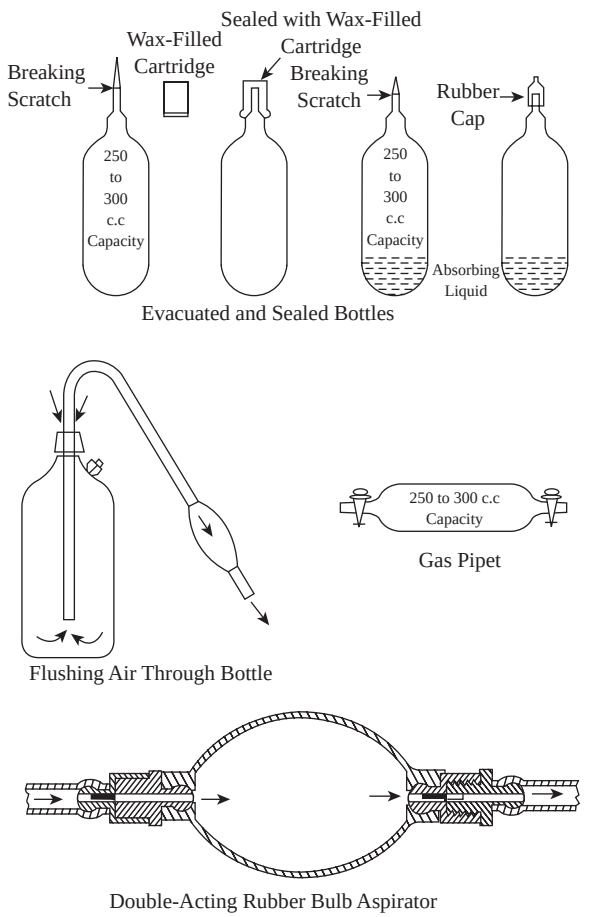

FIG. 8.5g
Devices for obtaining grab samples.

Even though the bag may be made of relatively inert materials, it is always possible that gas phase chemical reactions will occur, so that after a period of time the contents of the bag may not be identical in composition with the air originally sampled. Thus, a reactive gas like sulfur dioxide or nitric oxide can be expected to gradually oxidize, depending upon the storage temperature. It is generally advisable to perform analyses as soon as possible after collecting the samples. Losses by adsorption or diffusion will also tend to be greater with the passage of time and will occur to some extent even though the best available bag materials have been used.

The use of small bags may permit the collection of samples to be analyzed for a relatively stable gas such as carbon

© 2003 by Béla Lipták

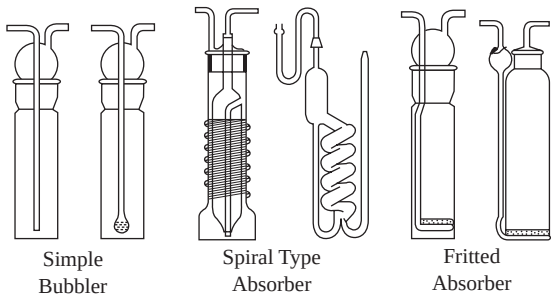

FIG. 8.5h
Gas-absorbing vessels.

monoxide at a number of locations throughout a community of interest, thus permitting routine air quality measurements that might otherwise be inordinately expensive.

Absorption The gases or vapors of interest can also be absorbed in a suitable sampling medium. Ordinarily, this medium is a liquid of some kind, but absorption may also take place in solid absorbents or upon supporting materials such as filter papers, which are impregnated with suitable absorbents. Carbon dioxide, for example, may be absorbed in a granular bed of alkaline material, and sulfur dioxide is frequently measured by absorption of reactive chemicals placed on a cloth or ceramic support.

A number of gases are also detected by passing them through filter papers or glass tubes containing reactive chemicals, with the immediate production of a color change, which can be evaluated by eye to give a measure of the concentration of the substance of interest.

Liquid Absorption Most commonly, however, gases and vapors are absorbed by passing them through a liquid in which they are soluble, or which contains reactive chemicals that will combine with the substance being sampled. Many different absorption vessels have been designed, ranging from simple bubblers made by inserting a piece of tubing beneath the surface of a liquid to rather complex gas-washing devices that are designed to increase the length of time that the air and liquid are in contact with each other (Figure 8.5h).

Impingers Probably the most widely used contacting device is the impinger, which is available in several sizes and configurations. An impinger consists of an entrance tube terminating in a small orifice, causing the velocity of the air passing through the orifice to greatly increase. When this jet of air strikes a plate or the bottom of the sampling vessel, an intense impingement or bubbling action occurs, which results in much more efficient absorption of gases from the airstream than would take place if the air was simply bubbled through at low velocity.

The two impingement devices most frequently used are the standard impinger and the midget impinger (Figure 8.5i). They are designed to operate best at airflow rates of 1 and

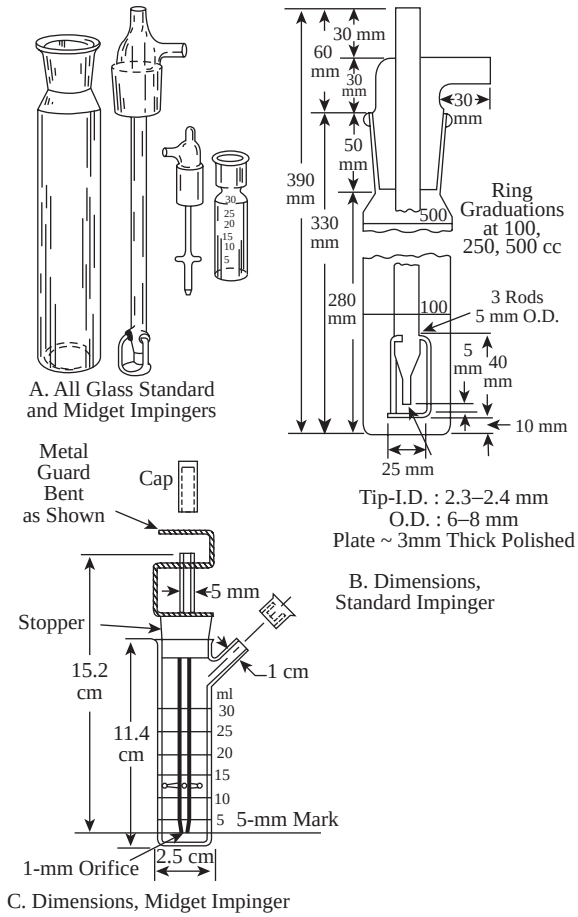

FIG. 8.5i
Standard and midget impingers.

0.1 ft^3/min, or 28.3 and 2.8 l/min, respectively. Using such devices for sampling periods of 10 or 30 min will result in the passage of a substantial amount of air through the devices, thus permitting low concentrations of trace substances to be determined with improved sensitivity and accuracy. Many relatively insoluble gases, such as nitrogen dioxide, are not quantitatively removed by passage through an impinger containing the usual sampling solutions.

Fritted Absorber The most useful sampling devices for absorbing trace gases from air are those in which a gas dispersion tube made of fritted or sintered glass, ceramic, or other materials is immersed in a suitable vessel containing the absorption liquid (Figure 8.5h). This device causes the gas stream to be broken into thousands of small bubbles, thus promoting contact between the gas and the liquid with resulting high collection efficiencies in most cases.

In general, fritted absorbers are more widely applicable to sampling gases and vapors than are impingers and, in addition, are not as dependent upon flow rates as are impingers. They are standard items available from scientific supply houses and come in various sizes suitable for many sampling tasks. It is often advisable to prefilter the air prior to sampling with a

© 2003 by Béla Lipták

fritted absorber in order to prevent the gradual accumulation of dirt within the pores of the frit.

The use of solid absorbents is not widely practiced in ambient air sampling because the quantity of absorbed gases is usually determined by gravimetric means. With the exception of carbon dioxide, relatively few gases of interest in the atmosphere lend themselves to this type of analysis.

Adsorption Adsorption, by contrast with absorption, consists of the retention of gaseous substances by solid adsorbents that, in most cases, do not chemically combine with the gases. Instead, the gases or vapors are held by adsorptive forces and may subsequently be removed unchanged. Any solid substance will adsorb a small amount of most gases, but to be useful as an adsorbent, a substance must have a large surface area and be able to concentrate a substantial amount of gas in a small volume of adsorbent.

Most widely used for this purpose are activated carbon or charcoal and activated silica gel. A small quantity of either adsorbent placed in a U-tube or other container through which air is passed will quantitatively remove many vapors and gases from a large volume of air and may subsequently be taken to the laboratory where desorption will remove the collected substance for analysis. Desorption is commonly achieved by heating the adsorbent and collecting the effluent gases or by eluting the collected substance with a suitable organic liquid.

In the case of most organic vapors, subsequent analysis by gas chromatographic, infrared, or ultraviolet spectroscopic means is usually most convenient. For some purposes, either silica gel or activated carbon may be used. In other instances, the use of silica gel is undesirable because it also adsorbs water vapor, and a relatively short sampling period in humid air can result in saturation of the silica gel before sufficient contaminant is adsorbed. Charcoal does not adsorb water and hence may be used in humid environments and may be sampled for days or even weeks if the concentration of contaminant is low.

The ease of sampling by using adsorbents is offset somewhat by the difficulty of quantitatively desorbing the samples for analysis. When literature data are not available to assist in predicting the behavior of a new substance, it is advisable to perform tests in the laboratory to determine both the collection efficiency and the success of desorption procedures after sample collection.

Freeze-Out Sampling Vapors or gases, which are condensable at low temperature, may be removed from the sampled airstream by passage through a vessel that is immersed in a refrigerating liquid. Table 8.5j lists liquids that are commonly used for this purpose, and usually it is desirable to form a sampling train in which two or three coolant liquids progressively lower the air temperature in its passage through the system. All freeze-out systems are hampered somewhat by the accumulation of ice resulting from water vapor and may eventually become plugged with ice.

Flow rates through a freeze-out train are necessarily limited also; in order for the air to be cooled to the required degree, a sufficient residence time in the system must be provided. For these reasons, and because of the general inconvenience of assembling freeze-out sampling trains, they are not generally used for routine sampling purposes unless no other approach is feasible. However, freeze-out sampling is an excellent means of collecting substances for research studies, inasmuch as the low temperatures tend to arrest further chemical changes and ensure that the material being analyzed will remain in the sampling container ready for analysis after warming. Analysis is most frequently conducted by means of gas chromatographic, infrared, or ultraviolet spectrophotometry, or by mass spectrometric means.

TABLE 8.5j
Coolant Solutions for Freeze-Out Sampling

Coolant	*Temperature (°C)*
Ice water	0
Ice and salt (NaCl)	–21
Dry ice and acetone	–78.5
Liquid air	–147
Liquid oxygen	–183
Liquid nitrogen	–196

Sampling of Particulates

Particulate matter is most conveniently removed from air by passage through a filter (Figure 8.5e). Before filtration is used to obtain a sample, however, consideration should be given to the purpose for which the sample is being taken. Many filters collect particulates efficiently, but thereafter it may be impossible to remover the collected matter except by chemical treatment. If the samples were initially collected for the purpose of examining the particles and measuring their size, or noting morphological characteristics, then many filters are not suitable because the particles are imbedded in the fibrous web of the filter and cannot readily be viewed or removed.

If the sample is collected for the purpose of performing a chemical analysis, then it is important that the filter itself does not contain significant quantities of the substance for which analysis is required. If the purpose of sampling is to collect a sufficient amount of particulate matter to permit weighing, then it is necessary to select a filter that can be weighed. This can be a problem, because many filtration materials are hygroscopic and change weight appreciably in response to changes in the relative humidity.

Filters may be made of many substances and, in fact, almost any solid substance could probably be made into a filter. In practice, however, fibrous substances, such as cellulose or paper, fabrics, asbestos, and a number of plastics or polymerized materials, are generally used. The most readily available filters are those made of cellulose or paper used in chemical laboratories for filtering liquids. Such filter papers come in a variety of sizes and range in efficiency from rather loose filters, which remove only the larger particles, to paper,

© 2003 by Béla Lipták

which will remove very fine particles with high efficiency. All filters display similar behavior, and ordinarily a high collection efficiency is accompanied by increased resistance to airflow.

Air Filters Certain kinds of filtration media are more suited to air sampling than most paper or fibrous filters. Of these, membrane filters are of greatest utility. The commercially available membrane filters combine extremely high collection efficiencies with relatively low resistance to flow. Such filters are not made up of a fibrous mat, but instead are usually composed of gels of cellulose esters or other polymeric substances in such fashion that a smooth surface of predictable characteristics is formed.

Such filters contain many small holes, or pores, and may be made to exacting specifications in this regard so that their performance characteristics may be predicted. In addition, the filters are usually of high chemical purity and are well suited to trace metal analyses. Some of the membrane filters can also be rendered transparent and thus permit direct observation of collected particles with a microscope. Alternatively, the filters can be dissolved in an organic solvent, and the particles may be isolated and studied. Most membrane filters are not greatly affected by relative humidity changes and may be weighed before and after use to obtain reliable gravimetric data.

Fiberglass Filters Another kind of filter that is widely used in sampling ambient air is the fiberglass filter. These filters are originally made of glass fibers in an organic binder; subsequently, the organic binder may be removed by firing, leaving a web of glass, which is very efficient in collecting fine particles from the air. The principal advantage of using this type of filter is its relatively low resistance to airflow and its virtually unchanging weight regardless of relative humidity.

The filters are not well suited to particle size studies, however; additionally, they are not chemically pure, and care must be taken to be certain that a substance for which analysis is to be made will not be contributed in unknown quantities by the filter itself. In the U.S., most of the data relating to suspended particulate matter in our cities have been obtained on filters made of fiberglass and used in conjunction with a sampling device referred to as a high-volume sampler (Figure 8.5e).

Many other kinds of filters are available, but most sampling needs are well met by membrane or fiberglass filters. Extensive data concerning the types of filters available and their performance characteristics will be found in the bibliography cited at the end of this section.

Impingement and Impaction The impingers previously described in relation to sampling gases and vapors (Figure 8.5i) may also be used for the collection of particles and, in fact, they were originally developed for that purpose. However, in ambient air sampling they are not used, inasmuch as the efficiency of collection tends to be low and unpredictable for the fine particles that may be present in ambient air. The relatively low sampling rates also make them less attractive than filters for general air sampling, but instances do arise when impingers can be satisfactorily used. When they are used, it is important that the correct sampling rates be maintained, for the collection efficiency of impingers for particles may vary drastically when flow rates are other than optimal.

Impactors Of more widespread use in ambient air sampling are devices known as impactors, in which air is passed through small holes or orifices and made to impinge or impact against a solid surface. When such devices are constructed so that the air passing through one stage is subsequently directed onto another stage containing smaller holes, the resulting device is known as a cascade impactor and has the capability of separating particles according to their sizes. Various commercial devices are available.

Figure 8.5k portrays one that is widely used and consists of several layers of perforated plates through which the air must pass. Each plate contains a constant number of holes, but the hole size is progressively decreased so that the same volume of air passing through each stage will impinge at an increased velocity. The result is that coarse particles are deposited on the first stage and successively finer particles are removed at each subsequent stage. While the particle size fractions obtained by such instruments are not very accurate, they do perform predictably when the characteristics of the aerosol being sampled are known.

In use, a cascade impactor is assembled after scrupulously cleaning each stage and applying a sticky substance

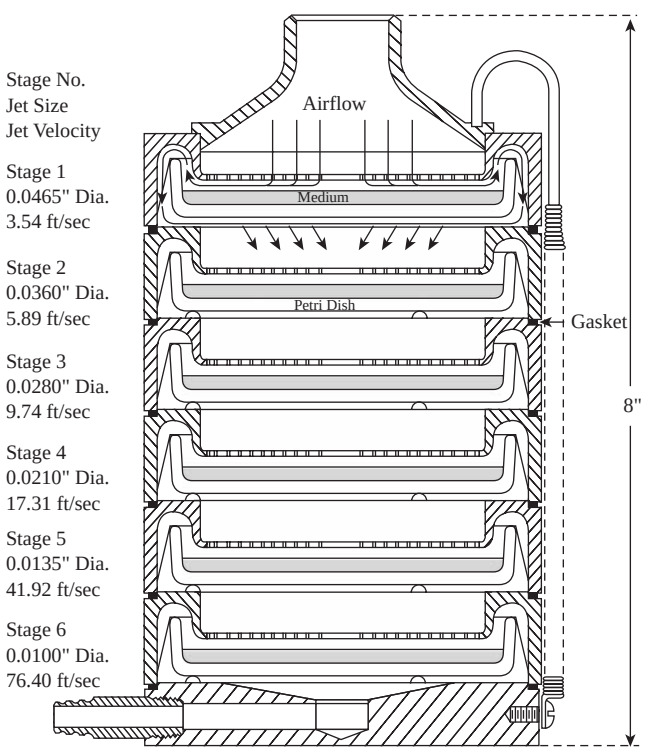

FIG. 8.5k
Cascade impactor (Andersen sampler).

© 2003 by Béla Lipták

or a removable surface on which the particles are to be deposited. After a suitably long period of sampling, during which time the volume of air is metered, the stages may be removed and the total weight of each fraction determined, as well as the fractions' chemical composition. Such information may be more useful than a single weight or chemical analysis of the total suspended particulate matter without regard to its particle size.

Electrostatic Precipitation Particulate matter can be quantitatively removed from air by means of instruments known as electrostatic precipitators. They operate on the same principle as the devices used to remove particulate matter from stack gases prior to discharging into the atmosphere. There are several commercially available electrostatic precipitators that may be used for air sampling. They operate on the same general principle that passing the air between charged surfaces imparts a charge to the solid particles in the air. Therefore, these particles can be collected on an oppositely charged surface or plate.

In one of the more widely used commercial devices (Figure 8.5l), a high-voltage discharge is made to occur along a central wire; the collecting electrode is a metallic cylinder that is placed around the central wire, while the air to be sampled is passing through the tube. An intense corona discharge takes place on the central wire; the particles entering the tube are charged and are promptly swept to the walls of the tube where they remain firmly attached.

By this means, it is possible to collect a sample for subsequent weighing or chemical analysis. It is also possible to examine the particles and study their particle size and shape, and the intense electrical forces may produce aggregates of particles that are different than those that existed in the sampled air.

Electrostatic precipitators are not as widely used as filters for ambient air sampling, because they are generally less convenient and tend to be heavy due to the power pack necessary to generate the required high voltage. Nevertheless, when available, they are excellent instruments for obtaining samples for subsequent analysis, and samples at relatively high flow rates and very low resistance.

Thermal Precipitators Whenever a strong temperature gradient exists between two adjacent surfaces, there will be a tendency for particles to be deposited on the colder of these surfaces. Collection of aerosols by this means is termed thermal precipitation and, in practice, several such commercial devices are available.

Because thermal forces are so weak, it is necessary to have a rather large temperature difference maintained in a small area.

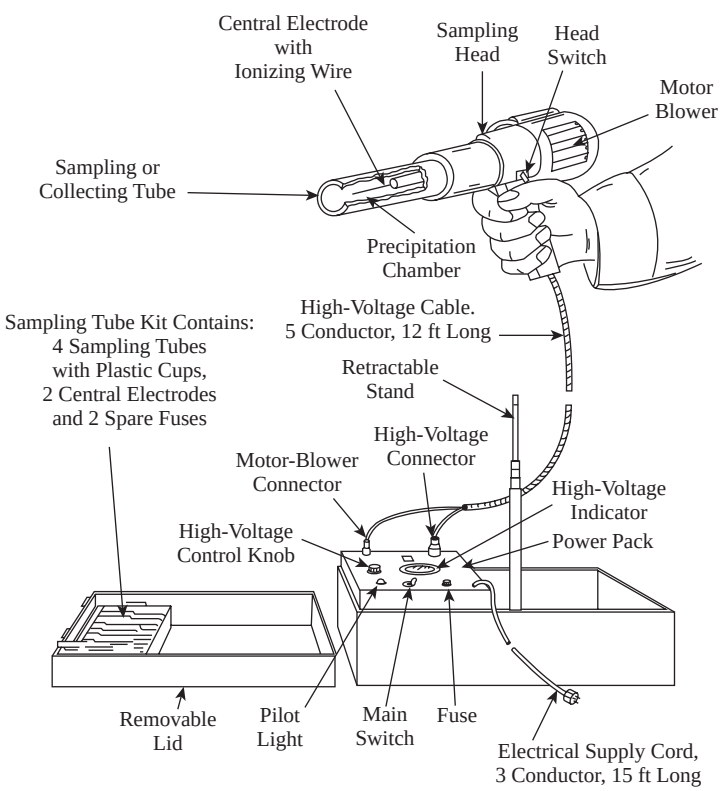

FIG. 8.5l
Electrostatic precipitator. (Courtesy of MSA Instrument Div.)

© 2003 by Béla Lipták

Additionally, the rate of airflow between the two surfaces must be low in order not to destroy the temperature gradient and to permit particles to be deposited before moving out of the collection area. As a result of these requirements, most devices use a heated wire as the source of the temperature differential and deposit a narrow ribbon of particles on the cold surface. Airflows are very small, being on the order of 10 to 25 ml/min. At such low rates, the amount of material collected will normally be insufficient for chemical analysis or weight determinations, but will be ample for examination by optical or electron microscopy.

Collection for particle size studies is, in fact, the principal use for thermal precipitation units, and they are well suited to collecting samples for such investigations. Because the collecting forces are gentle, it is generally believed that the particles are deposited unchanged. The microscopic examination gives information that can be translated into data concerning the number of particles and their morphological characteristics. It is convenient also to use a small grid suitable for insertion into an electron microscope as the collecting surface, thus making it unnecessary to perform additional manipulations of the sample prior to examination by electron microscopy.

Reference

1. www.ecotech.com.au.

Bibliography

Annual Book of ASTM Standards, West Conshohocken, PA: American Society for Testing and Materials, 2002.

ASHRAE, Standard 110–1995, "Method of Testing Performance of Fume Hoods."

Dubois, R. et al., *The New Sampling Initiative*, 47th Annual ISA Analysis Division Symposium, April 2002.

Fussell, E., "Molding the Future of Process Analytical Sampling," *InTech*, August 2001, 32.

"Gas Detectors and Analyzers," *Measurements and Control*, October 1992.

Gregg, W., "The Use of Inertial Separators for Sampling," ISA/93 Technical Conference, Chicago, September 19–24, 1993.

McMahon, T. K., "The New Sampling/Sensor Initiative," *Control*, August 2001.

Laznow, J. and Ponder, T., "Monitoring and Data Management of Fugitive Hazardous Air Pollutants," ISA Conference, Houston, TX, October 1992.

Lodge, J. P., *Methods of Air Sampling and Analysis*, Chelsea, MI: Lewis Publishers, 1988.

Lord, H. C. and Brown, R. V., "Open-Path Multi-Component NDIR Monitoring of Toxic, Combustible or Hazardous Vapors," paper 91-0401, ISA Conference, Anaheim, CA, 1991.

Ness, S. A., *Air Monitoring for Toxic Exposures*, New York: Van Nostrand Reinhold, 1991.

Pevoto, L. F. and Hawkins, L. J., "Sample Preparation Techniques for Very Wet Gas Analysis," ISA Conference, Houston, TX, October 1992.

Sherman, R. E., Process Analyzer Sample-Conditioning System Technology, New York: John Wiley & Sons, 2002.

Van den Berg, F. W. J., Hoefsloot, H. C. J., and Smilde, A. K., "Selection of Optimal Process Analyzers for Plant-Wide Monitoring," *Analytical Chemistry*, 74(13), 3105–3111, 2002.

© 2003 by Béla Lipták

8.6 Biometers

I. G. YOUNG (1974, 1982) **B. G. LIPTÁK** (1995, 2003)

Method of Detection:	Photometric measurement of light emitted by chemical reaction
Sample Pressure:	Atmospheric
Sample Temperature:	Ambient
Sample Type:	Grab sample
Materials of Construction:	Glass
Range:	10^{-7} to 10^{-2} μg of ATP per 10-ml sample of bacterial extract. Sensitively to 10^{-7} μg per 10-μl sample. It can be calibrated for number of bacteria per microgram of ATP.
Response:	Laboratory method: minutes after starting reaction
Cost:	About $10,000
Supplier:	Asay Design Inc. (www.assaydesign.com) Bio-Tek Instruments (www.biotek.com) Innovative Imaging Inc. (www.innovative-imaging.com) Sigma-Aldrich (www.sigmaaldrich.com) SP Industries Inc. (www.wilmad-labglass.com)

INTRODUCTION

The key wastewater-related measurements, which detect the concentration of the discharged waste stream in terms of its oxygen demand, are discussed in Section 8.7. The sensors discussed in this section measure the biological population and the biological oxidative activity by detecting the amount of adenosine triphosphate (ATP) and the changes in its concentration.

ATP ANALYSIS

In a detailed study of the control parameters for the activated sludge process, measurements of great interest are biochemical oxygen demand (BOD) and chemical oxygen demand (COD). BOD and COD reduction, biological population density, and biological oxidative activity are important indicators of this process.

It has been found that the amount of ATP is proportional to the viable biomass in a sample. It has also been found that changes in ATP concentration measure the oxidative capability of the biomass.[1] Thus, it is of great interest to measure the ATP content of samples in the activated sludge process as well as in rivers, lakes, and other receiving waters.

Sensitive methods for ATP analysis have been developed based on the observation that the luminescent reaction in fireflies is absolutely dependent on the presence of ATP. The *in vitro* light-yielding reactions are given in Equations 8.6(1) and 8.6(2):

$$LH_2 + E + ATP[\underline{Mg2^+}]E - LH_2 - AMP + PP \qquad \textbf{8.6(1)}$$

$$E - LH_2 - AMP + O_2 \rightarrow E + PRODUCT + CO_2 + AMP + Hv \qquad \textbf{8.6(2)}$$

where

LH_2 = luciferin
E = luciferase enzyme
$E - LH_2 - AMP$ = enzyme–luciferin–adenosine monophosphate complex
PP = pyrophosphate

© 2003 by Béla Lipták

It is seen that the yield of light quanta (Hv) is in proportion to the amount of ATP present in the sample.

LUMINESCENCE BIOMETER

ATP assay procedures have been developed based on the reactions just described. Briefly, the procedure involves rapid killing of the live bacterial cells and immediate extraction of ATP into aqueous solution. The latter is then treated with firefly lantern extract, and the light emission of the resultant solution is measured with a photometer. The firefly lantern extract and the ATP required for calibration are commercially available.

A manually operated instrument is available for the ATP measurement. It is supplied with all the required reagents. A tablet containing buffer and magnesium sulfate is dissolved in water, after which a homogeneous powder of luciferin and luciferase is added. The sample is filtered through a coarse filter to remove solid matter, and the latter is discarded. The filtrate is passed through a bacterial filter to catch all the living bacteria. The bacteria on the filter are treated with butanol, which ruptures the cell walls and releases the ATP.

The filtrate is made up to volume with water, and a microliter aliquot is added to the prepared reagent already in a cuvette. The cuvette is then placed in the instrument for reading of its light emission. The light flash is automatically converted to ATP or microorganism concentration per milliliter, depending on how the instrument is calibrated.

Reference

1. Patterson, J. W., Brezonik, P. L., and Putnam, H. D., "Sludge Activity Parameters and Their Application to Toxicity Measurements in Activated Sludge," Proceedings, Industrial Waste Conference, Purdue University, May 1969.

Bibliography

Adams, V., *Water and Wastewater Examination Manual*, 1990.
Annual Book of ASTM Standards, West Conshohocken, PA: American Society for Testing and Materials, 2002, www.normas.com/ASTM/.
Dawson, R., *Data for Biochemical Research*, Oxford: Oxford University Press, 1990.
Fresenius, W. et al., *Water Analysis*, New York: Springer-Verlag, 1988.
Matzner, B. A., "Instantaneous Metering Aids Activated Sludge Plant," *Water and Wastes Engineering*, August 1976.
McNeil, B. and Harvey, L., *Fermentation: A Practical Approach*, Oxford: IRL Press, 1990.
Meyers, R. A., Ed., *Encyclopedia of Analytical Chemistry: Instrumentation and Applicationss*, New York: John Wiley & Sons, 2000.
Molvar, A. E., "Instrumentation and Automation Experiences in Wastewater-Treatment Facilities," EPA Document 600/2-76-198, October 1976.
Sherman, R. E., *Process Analyzer Sample-Conditioning System Technology*, New York: John Wiley & Sons, 2002.
Sokal, R. R. and Rohlf, F. J., *Biometry*, San Francisco: W.H. Freeman, 1994.
Stanley, P. E., *ATP Luminescence*, Oxford: Blackwell Science, 1990.
Van den Berg, F. W. J., Hoefsloot, H. C. J., and Smilde, A. K., "Selection of Optimal Process Analyzers for Plant-Wide Monitoring," *Analytical Chemistry*, 74(13), 3105–3111, 2002.
Vij, D. R., *Luminescence of Solids*, New York: Plenum Pub. Corp., 1998.
"Water and Environmental Technology," in *ASTM Standards*, Vols. 11.01 and 11.02, West Conshohocken, PA: American Society for Testing and Materials, published yearly.
Zar, J. H., *Biostatistical Analysis*, New York: Prentice Hall, 1998.

© 2003 by Béla Lipták

8.7 Biological Oxygen Demand, Chemical Oxygen Demand, and Total Oxygen Demand

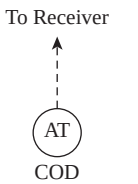

Flow Sheet Symbol

I. G. YOUNG (1974, 1982) **B. G. LIPTÁK** (1995) **J. F. TATERA** (2003)

Types of Measurements:	A. Biological oxygen demand (BOD) B. Chemical oxygen demand (COD) C. Total oxygen demand (TOD)
Sampling Technique:	Depending on the application, composite flow-averaged or time-averaged samples are often automatically collected for manual introduction to an instrument, in addition to traditional instantaneous grab samples. Continuous-flow automatic sampling is common for instruments that are in continuous operation for process monitoring and control.
Sample Pressure:	Typically collected at near atmospheric pressure
Sample Temperature:	Collected at process or ambient conditions
Suspended Solids:	Varies with the application and instrument. Many applications are interested in the oxygen demand/impact of both the liquid and solids in the sample stream.
Materials of Construction:	Glass, quartz, Teflon, polyethylene, Tygon, polyvinyl chloride (PVC), stainless steel, ceramic
Ranges:	A. 0.1 to 1500 mg/l is typical and higher with dilution B. 5 to 1500 mg/l is typical and higher with dilution or some methods C. 0 to 60,000 ppm
Inaccuracy:	A. 3 to 20% B. 2 to 10% C. 2 to 5%
Response:	A. 3 min to 5 days B. 2 to 15 min C. 3 to 10 min
Costs:	A. $500 to $20,000 B. $8,000 to $20,000 C. $5,000 to $20,000
Partial List of Suppliers:	Bran and Luebbe Inc (www.branleubbe.com) (B) Challenge Environmental Systems Inc. (www.challenge-sys.com) (A) Horiba Instruments Inc. (www.horiba.com) (B) Ionics Inc. (www.ionics.com) (C) Isco Inc. (www.isco.com) (A, B) LAR Analytical Inc. (www.lar.com) (A, B) Respirometry Plus LLC (www.respirometryplus.com) (A) Star Instruments, Inc. (www.startoc.com) (A, B)

INTRODUCTION

A significant portion of the total damage caused by the discharging of wastewater into lakes or rivers is because many of these discharges deplete the oxygen content of the lake or river and the resulting impact that this depletion has on the lake's or river's ecosystem. This oxygen-depleting potential is usually expressed and quantified by biological oxygen

© 2003 by Béla Lipták

demand (BOD), chemical oxygen demand (COD), or total oxygen demand (TOD) measurements. These instruments measure the amount of oxygen that a liter of wastewater is expected to take from the receiving waters as its pollutants are degraded by oxygen-consuming (aerobic) bacteria.

BOD analyzers utilize bacteria to oxidize the pollutants. In COD analyzers, the oxygen demand is usually measured through chemical oxidation and catalytic combustion techniques. TOD analyzers typically oxidize the sample in a catalyzed thermal combustion process and detect both the organic and inorganic impurities in a sample.

This section describes the various BOD, COD, and TOD analyzers. The main distinction between the various designs is in the speed at which the measurement is obtained and in the correlation of the resulting readings with manometric BOD tests. Other measurements that are often used for similar applications and correlated to these measurements include total carbon (TC), total inorganic carbon (TIC), and total organic carbon (TOC) analyzers; they are described in Section 8.58.

OXYGEN DEMAND

The oxygen demand of a sample of water is the amount of elemental oxygen required to react with biodegradable material that is dissolved and suspended in the sample. This amount is expressed as milligrams of oxygen per liter of sample. When a population of bacteria causes the oxidation reaction in a population of bacteria, the oxygen required is called the biological oxygen demand.

When the oxidation is carried out with a chemical oxidizing reagent such as potassium dichromate, the oxygen equivalent is called the chemical oxygen demand. In a sample of water, oxidation can also be caused by heating of the sample in a furnace in the presence of a catalyst and oxygen. This is called total oxygen demand. If the heating in a furnace occurs in the presence of carbon dioxide, the result is called total carbon dioxide demand (TCO_2D).

The BOD test is perhaps the most important oxygen demand measurement for the analysis of effluents and receiving waters (streams, lakes, and rivers). Basically, the BOD test measures the amount of oxygen used by microorganisms that feed on organic pollutants in the water under aerobic conditions. In this test, a bacterial culture is added to the sample under well-defined conditions and oxygen utilization is measured.

Although test procedures are carefully defined,[1,2] it is difficult to obtain highly reproducible results, and the procedure is subject to the influence of many variables, particularly when the wastewater contains a variety of complex materials. Some of the factors that contribute to variations in BOD results are discussed below.

The Seed

The seed is the bacterial culture that affects the oxidation of materials in the sample. If the biological seed is not acclimated to the particular wastewater, erroneous results are frequently obtained. Because different bacterial cultures are used in BOD measurements at different locations, it is not surprising that the results may be inconsistent. Also, recall the intent of the measurement. If the intent is to monitor plant feeds to help control the waste treatment operation, bacteria from the plant waste treatment process may be most useful, as it is probably acclimated to the plant's typical composition. If the intent is to predict the impact on receiving waters, a more random population may better predict this.

pH

The BOD results are also greatly affected by the pH of the sample, especially if it is lower than 6.5 or higher than 8.3. Not only is oxidation of the material itself pH dependent, but so is that of the bacterial activity. In order to achieve uniform conditions, the sample should be buffered to a pH of about 7.

Temperature

Although the standard test condition calls for a temperature of 20°C (68°F), field tests often require operation at other temperatures and, consequently, the results tend to vary unless temperature corrections are applied (Figure 8.7a).

Toxicity

Toxic materials in the sample, although they may be oxidizable or biodegradable, frequently have a biotoxic or biostatic effect on the biological seed. The presence of toxic materials of this type is indicated by an increase in the BOD value as a specific sample is diluted for the BOD test. Consistent values may be obtained either by removing the toxic materials from the sample or by developing a seed that is compatible with the toxic materials in the sample.

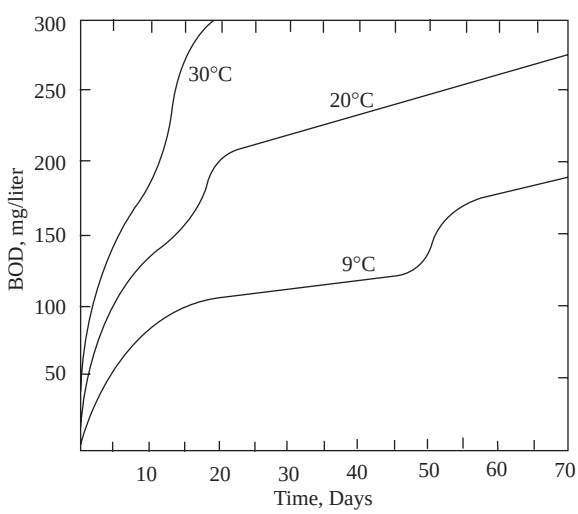

FIG. 8.7a
Progress of BOD at 9, 20, and 30°C (48, 68, and 86°F).[3] The break in each curve corresponds to the onset of nitrification.

© 2003 by Béla Lipták

Incubation Time

The usual standard lab test incubation time is 5 days, although the time required for stabilization (complete biochemical degradation of materials in the water) may take as long as 20 or 30 days. The 5-day results may occur at a flat part of the oxygen demand vs. time curve, or they may occur at a steeply rising portion. Thus, depending on the type of seed and the type of oxidizable material, divergent results can be expected for this reason alone (Figure 8.7a).

On-line and more rapid BOD-based testing (like fast BOD and respirometry) typically reduce this time factor into the range of minute to hours. To accomplish this, they avoid long-term equilibrium requirements and usually optimize sample size to bacteria population and other relevant factors to give them a faster analysis with reasonable repeatability.

Nitrification

In the usual course of the BOD test, the oxygen consumption rises steeply at the beginning of the test owing to attack on carbohydrate materials. Another sharp increase in oxygen utilization occurs sometime during the 10th to 15th day in those samples containing nitrogenous materials (Figure 8.7a). Stated another way, the rate constant for attack on nitrogenous materials is much lower than that for attack on carbonaceous materials, and the demand due to nitrification is not appreciable until most of the carbonaceous material has been destroyed.[3,4]

In view of difficulties and variability of the classic BOD determination, a rapid procedure that minimizes or eliminates these problems has been sought for many years. Although other procedures are used, the BOD continues to remain the universal standard method, supported by the force of tradition and the weight of legal authority in many jurisdictions.

Thus, those who are concerned with estimating the oxygen depletion load of effluent waters must be thoroughly acquainted with the BOD test and prepared to support other methods by suitable correlation to BOD results. Therefore, although oxygen demand may be measured in a number of ways, the 5-day BOD result is what is meant by oxygen demand in most cases.

BIOLOGICAL OXYGEN DEMAND

Five-Day BOD Procedure

If the BOD of a sample of water at 20°C (68°F) is measured as a function of time, a curve such as the one in Figure 8.7a is obtained. For the first 10 to 15 days, the curve is approximately exponential, but at about the 15th day a sharp increase is noted, which then falls off to a steady BOD rate.

Because of the length of time and because the curve does not flatten, a standard test period of 5 days has been adopted universally for the BOD procedure. This is a laboratory procedure requiring some skill and training to obtain concordant results. The procedure is described in greater detail in the literature;[1,2] only a brief description is given here.

A measured portion of the sample to be analyzed is mixed with seeded dilution water so that after 5 days of incubation, the dissolved oxygen (DO) in the mixture is still sufficient for biological oxidation of materials in the sample. Of course, this cannot be known beforehand; consequently, a number of dilutions are run simultaneously for an unknown sample, or experience is used as a guide for well-defined samples.

The seeded dilution water contains phosphate buffer (including ammonium chloride), magnesium sulfate, calcium chloride, and ferric chloride, as well as a portion of seeding material. The former group of inorganic materials is frequently referred to as nutrients. The latter group is a suspension of bacteria in water, usually supernatant liquor from a domestic sewage plant.

Seeds may also be prepared from soil, developed from cultures in the laboratory, or obtained from receiving water 2 to 5 mi downstream of the discharge. The DO content of the mixture is determined at the start of the test and again after 5 days of incubation at 20°C in a special BOD bottle.

DO Determination and Standards The DO may be determined by the Winkler titration method[1] or instrumentally with a DO membrane electrode. The difference in DO after 5 days is used to calculate the BOD of the original sample. Corrections must be applied for immediate oxygen demand (that due to inorganic reducing materials) and for the oxygen required by the bacteria themselves for sustaining life (endogenous metabolism). A blank sample is run to assist with this.

There is no standard against which the accuracy of the BOD test can be measured. The precision of the method is also difficult to ascertain because of the many variables. However, the single-operator precision of the method has been tested using a standard glucose–glutamic acid solution.

Using eight different types of seed materials, the single-operator precision was 11 mg/l at a level of 223 mg/l, or about 5%. It must be recognized that these results were obtained with highly skilled personnel under well-controlled laboratory conditions.

Instrumentation A semiautomatic instrument has been designed to measure the BOD of as many as 11 samples. The samples have to be manually placed on the instrument turntable and the controls manually set. Means are provided for automatic re-aeration of those samples in which the DO has fallen to low values.

Measurements of the DO are made on a preset time schedule by the polarographic DO sensor. The capability of automatic re-aeration when the DO is low eliminates the need for dilution, leading to improved precision in the BOD results. The instrument consists of a measuring unit (DO probe, aerator, water-sealing mechanism, unplugging mechanism, sample bottle, and turntable) and a control unit, by which all of the operations are programmed. The measuring

© 2003 by Béla Lipták

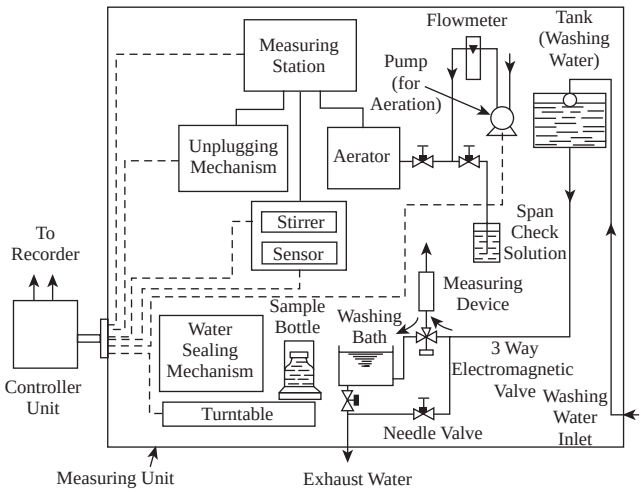

FIG. 8.7b
Semiautomatic BOD instrument.

unit is housed in a chamber maintained at 20°C. Means for storing DO data on each sample are supplied, and the BOD is calculated from the DO values as already described. Figure 8.7b illustrates this instrument.

Extended BOD Test

As reflected in Figure 8.7a, continuation of the BOD test beyond 5 days shows a continuing oxygen demand, with a sharp increase in BOD rate at the 10th day owing to nitrification. The latter process involves biological attack on nitrogenous organic material accompanied by an increase in BOD rate. The oxygen demand continues at a uniform rate for an extended time.

Knowledge of oxygen utilization of a polluted water supply is important because 1) it is a measure of the pollution load, relative to oxygen utilization by other life in the water; 2) it is a means for predicting progress of aerobic decomposition and the amount of self-purification taking place; and 3) it is a measure of the oxygen demand load removal efficiency by different treatment processes.

As a means for treatment plant control and setting the legal standards for wastewater effluents, the extended test is not used. However, it must be remembered that the 5-day BOD does not represent the TOD load of a receiving water. The dynamics of oxygen removal and replenishment in receiving water is discussed in the literature.[3]

Manometric BOD Test

In the standard dilution method that was previously described, all the oxygen required must already be inside the BOD bottle, since it is sealed in a gas-tight manner at the initiation of the incubation period, and care is taken to prevent access of air into the sample. In the manometric procedure,[5] the seeded sample is confined in a closed system that includes an appreciable amount of air.

As the oxygen in the water is depleted, it is replenished by the gas phase. A potassium hydroxide (KOH) absorber within the system removes any gaseous carbon dioxide generated by bacterial action. The oxygen removed from the air phase results in a drop in pressure that is removed with a manometer. This fall is then related to the BOD of the sample.

Thus, in the manometric method, the DO of the water remains at a moderately high level, close to saturation (9 mg/l at 20°C), whereas in the standard BOD, the DO falls continuously during the 5-day incubation period to values near 1 mg/l. Despite this marked difference in conditions of DO during incubation, results in close agreement are obtained on many samples by the two different procedures.

An apparatus is commercially available in which the BODs of five samples can be determined simultaneously by the manometric method. A measured sample of the sewage or wastewater is placed in one of the bottles of the apparatus, and the bottle is connected to a closed-end mercury manometer (Figure 8.7c). Above the water sample a quantity of air is trapped. As bacteria in the sample utilize oxygen, it is replenished by oxygen from the air. The removal of oxygen from the air results in a lowering of the air pressure.

The fall in pressure is read on the mercury manometer directly in BOD units, assuming that the original air contained 21% oxygen. The preceding description assumes a sample that is already seeded. Of course, the method can be modified for those samples that require the addition of a bacterial culture. The procedure is carried out manually in the laboratory. In addition to the manipulations already described, it requires reading of the manometer by the laboratory technician.

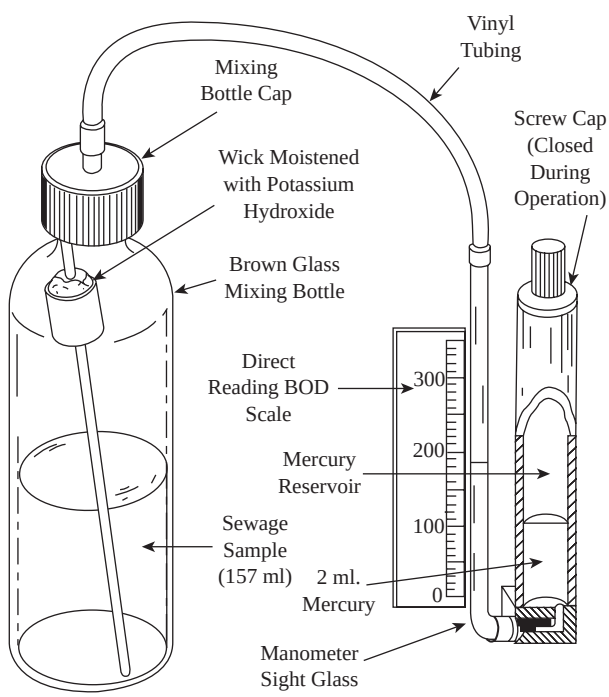

FIG. 8.7c
Manometric BOD apparatus.

© 2003 by Béla Lipták

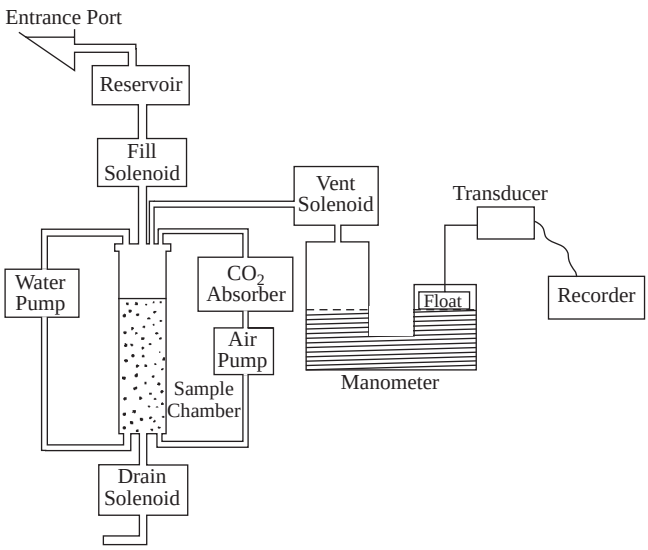

FIG. 8.7d
BOD determination by automatic respirometer.

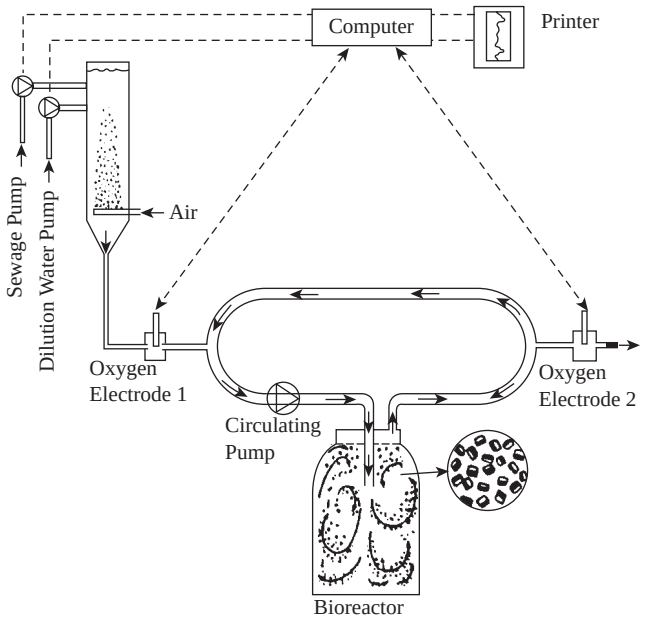

FIG. 8.7e
BOD assessment is obtained in a few minutes in a continuously circulated bioreactor where the oxygen take-up of the organisms controls dilution.[8]

Automatic Recording The manometric method also lends itself to automatic recording of the course of oxygen utilization, since it is possible to monitor the pressure continuously. This has been accomplished in an automatic respirometer[6] now commercially available (Figure 8.7d).

The sample, from 1 to 4 l, is introduced into a closed system containing air. Countercurrent circulation of both air and water insures equilibrium between dissolved and gaseous oxygen. A carbon dioxide scrubber is provided in the gas-circulation line. A recording manometer detects the utilization of oxygen as the test is run for several hours. Published data indicate a correlation between the respirometer BOD and the standard BOD.[7] Both laboratory and automated on-line versions of this instrument are available.

It must be recognized that BOD is inherently a time-consuming process and ill-suited to the requirements of process monitoring or control. The shortest period mentioned for the automatic respirometer is 2 h, often too long for an effective control instrument. However, it is an excellent device for longer-term laboratory and process studies, since it can be made to simulate the activated sludge process.

Useful fast BOD and respirometric measurements have been reduced to times under an hour and have been useful in the control of several waste treatment operations, though they are more often utilized in a monitoring role.

BOD Assessment in Minutes

When determining the BOD concentration in groundwaters, it might be acceptable to wait 5 days for the results, but in the control and operation of sewage treatment plants, it is not. The hold-up capacity of industrial and municipal wastewater treatment facilities and the desire for closed-loop control necessitates the use of a much faster sensor. One such analyzer is described in Figure 8.7e.

In this design a bioreactor is filled with a large number of plastic rings, the interior of which are protected against mechanical abrasions and thereby provide a growth surface for organisms. A circulation pump serves to quickly distribute the sewage in the bioreactor and to keep the plastic rings in continuous motion.

The sewage concentration (nutrient level) in the reactor is maintained at a constant low value, which results in an oxygen demand of about 3 mg/l. This oxygen demand is measured and maintained constant by detecting the decrease in oxygen concentration at the points where the diluted sewage enters and leaves the reactor. The dissolved oxygen concentration at electrode 2 is kept at a constant value below that at electrode 1. If this difference drops, the sewage concentration is increased; if this difference rises, the concentration is reduced.

The sewage concentration (the nutrient concentration) in the bioreactor is adjusted by a computer. It varies the mixing ratio of sewage and dilution water. The total flow from the sewage and dilution water pumps is always 1 l/min, and it is the ratio of the two streams that is modulated. Therefore, this pumping ratio is an indication of the BOD concentration of the sewage sample.

Correlation between this fast BOD measurement and the 5-day BOD obtained through conventional methods has been acceptable.[8] Fouling of the piping was found to be minimal, and weekly recalibration of the oxygen electrodes was found to be satisfactory.

© 2003 by Béla Lipták

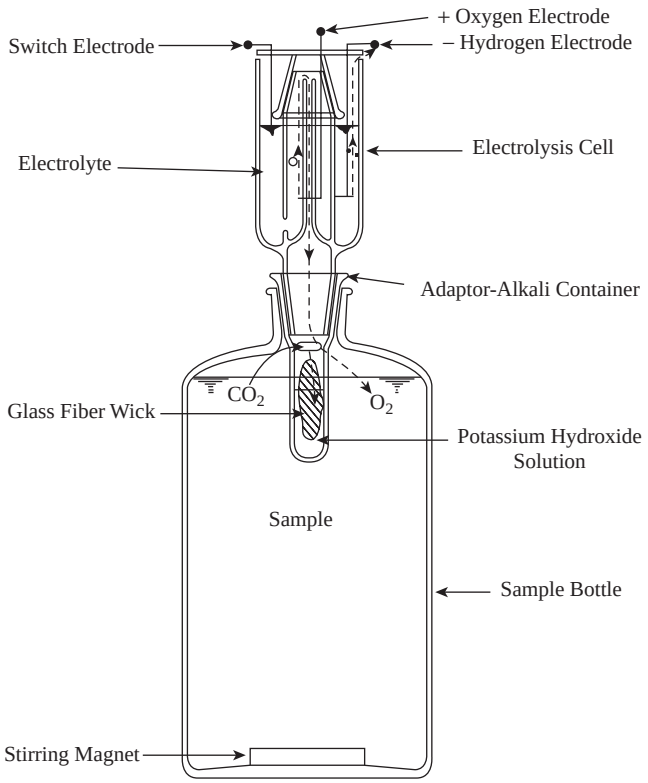

FIG. 8.7f
Electrolysis system for measuring BOD.

Electrolysis System for BOD

Electrolysis of water can supply oxygen to a closed system[9,10] as incubation proceeds (Figure 8.7f). At constant current, the time during which electrolysis generates the oxygen to keep the system pressure constant is a direct measure of the oxygen demand (by Faraday's law).

An instrument based on this principle permits the running of six samples simultaneously, and its readout gives BOD directly, in milligrams per liter for each sample. After starting the test run, operator attention is not required.

CHEMICAL OXYGEN DEMAND

Standard Dichromate COD Procedure

This laboratory method requires skill and training[1,2] similar to that required for the BOD test. A sample is heated to its boiling point with known amounts of sulfuric acid and potassium dichromate. Loss of water is minimized by use of a reflux condenser. After 2 h, the solution is cooled, and the amount of dichromate that reacted with oxidizable material in the water sample is determined by titrating the excess potassium dichromate with ferrous sulfate, using ferrous 1,10-phenanthraline (ferroin) as the indicator. The dichromate consumed is calculated as to oxygen equivalent for the sample and reported as milligrams of oxygen per liter of sample.

Interpretations of COD values are difficult, since this method of oxidation is markedly different from the BOD method. Although ultimate BOD values can be expected to agree with COD values, a number of factors may prevent this concordance. Among these, we may mention the following:

1. Many organic materials are oxidizable by dichromate but not biochemically oxidizable, and vice versa. For example, pyridine, benzene, and ammonia are not attacked by the dichromate procedure.
2. A number of inorganic substances such as sulfide, sulfites, thiosulfates, nitrites, and ferrous iron are oxidized by dichromate, creating an inorganic COD that is misleading when estimating the organic content of wastewater. Although the factor of seed acclimation will give erroneously low results on the BOD tests, COD results are not dependent on acclimation.
3. Chlorides interfere with the COD analysis, and their effect must be minimized in order to obtain consistent results. The standard procedure provides for only a limited amount of chlorides in the sample. Despite these limitations, the dichromate COD has been useful in control of wastewater effluents from plants concerned with caustic and chlorine, dyeing and textiles, organic and inorganic chemicals, paper, paints, plating, plastics, steel, aluminum, and ammonia. This is usually accomplished by diluting the sample to achieve a lower chloride concentration and interference. This can be a problem for low COD concentration samples, as the dilution may dilute the COD concentration below the detection level or to levels at which accuracy and repeatability are poor.

COD Detector

The term COD usually refers to the laboratory dichromate oxidation procedure, although it has also been applied to other procedures that differ greatly from the dichromate method but which do involve chemical reaction. These methods have been embodied in instruments both for manual operation in the laboratory and for automatic operation on-line. They have the distinct advantage of reducing analysis time from days (5-day BOD) and hours (dichromate, respirometer) to minutes.

Automatic On-Line Designs

Figure 8.7g illustrates an on-line analyzer available with COD ranges from 0 to 5000 ppm and with measurement cycle times that are adjustable from 10 min to 5 h. The sample flow can be continuous at rates up to 0.25 GPM (1.0 lpm) and can contain solid particles up to 100 microns in size. The automatic COD analyzer periodically takes a 5 cc sample from the flowing process stream and injects it into the reflux

© 2003 by Béla Lipták

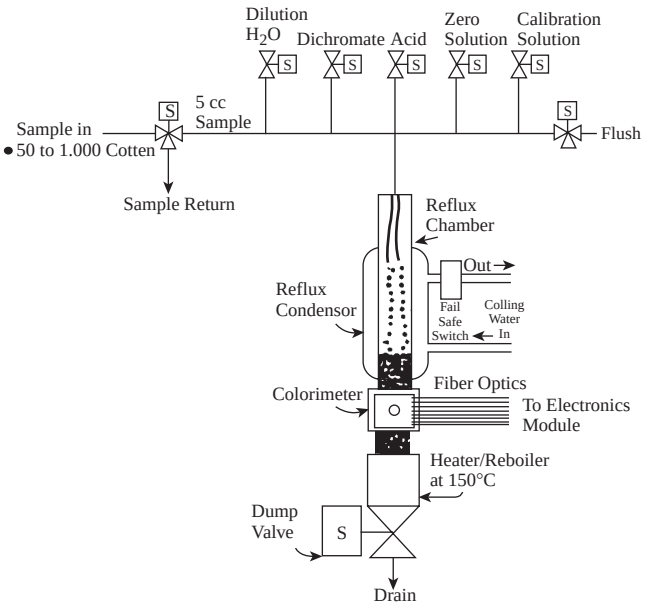

FIG. 8.7g

Automatic COD analyzer using dichromate reagent and fiber-optic colorimeter detector and providing features of adjustable reflux time and autocalibration. (Courtesy of Ionics Inc.)

chamber after mixing it together with dilution water (if any) and with two reagents: dichromate solution and sulfuric acid.

The reagents also contain an oxidation catalyst (silver sulfate) and a chemical that complexes chlorides in the solution (mercuric sulfate). The mixture is boiled at 302°F (150°C) by the heater, and the vapors are recondensed by the cooling water in the reflux condenser. The solution is refluxed for a preset time, during which the dichromate ions are reduced to trivalent chromic ions, as the oxygen-demanding organics are oxidized in the sample. The chromic ions give the solution a green color.

The COD concentration is measured by detecting the amount of dichromate converted to chromic ions by measuring the intensity of the green color through a fiber-optic detector. The microprocessor-controlled package is available with automatic zeroing, calibration, and flushing features. Analyzers utilizing this or other COD wet chemical reaction schemes are generally categorized as flow injection analyzers (FIAs) or continuous-flow analyzers (CFAs), and some of the manufacturers of these types of analyzers do not advertise them as COD analyzers. To them, COD is just one application of their FIA or CFA capability.

In one instrument, a 20-μl water sample is manually injected into a carbon dioxide carrier stream and swept through a platinum catalyst combustion furnace. In that furnace, the pollutants are oxidized to carbon monoxide and water, and the water is removed from the stream by a drying tube, after which the reaction products receive a second platinum catalytic treatment.

A nondispersive infrared (NDIR) detector is used to measure the concentration of carbon monoxide, and a calibration chart is utilized to convert the readings into COD. An analysis can be completed in 2 min. This instrument is available commercially for manual operation (Figure 8.7h). Data obtained on domestic sewage[11] indicate excellent correlation between this method (frequently called CO_2D) and the standard COD.

Some other approaches to COD monitoring include methods that utilize ozone and OH–radicals as the oxidizing agents. One ozone-based scheme enriches dilution water with ozone and measures the dissolved ozone concentration of the dilution water and the residual dissolved ozone concentration downstream of the reaction chamber. It then calculates a COD value based on the difference in the two measurements and the ratios of dilution water and sample being delivered to the reaction chamber.

It has a response time of 3 min. Another OH–radical approach produces OH–radicals on an electrode, by an electrical current. These OH–radicals are extremely strong oxidizing agents. An electrochemical measurement signal based on the OH–radicals being converted and measured as OH–ions results in a 30-sec analysis with a range of 1 to 100,000 ppm that is said to correlate to the dichromate standard method.

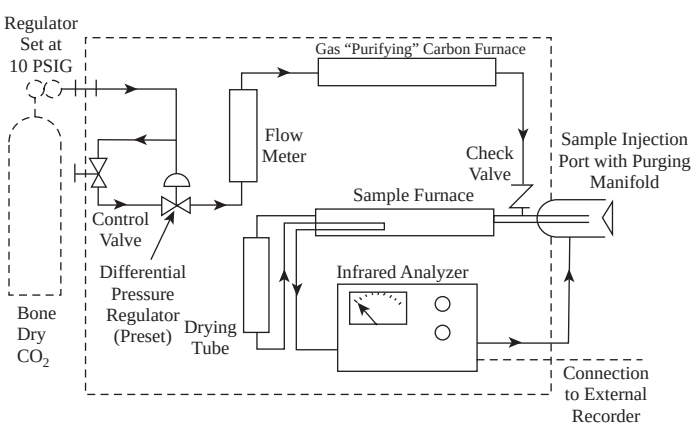

FIG. 8.7h

COD detection employing combustion in a carbon dioxide carrier and an NDIR sensor.

© 2003 by Béla Lipták

One thing to remember is that all of these techniques are based on a chemical oxidation reaction and that all reactions can experience interferences. The nice thing about having several options is that you can pick the one that is most suited to your sample matrix.

TOTAL OXYGEN DEMAND

The TOD method is based on the quantitative measurement of the amount of oxygen used to burn the impurities in a liquid sample. Thus it is a direct measure of the oxygen demand of the sample. Measurement is by continuous analysis[12,13] of the concentration of oxygen in a combustion process gas effluent (Figure 8.7i).

The oxidizable components in a liquid sample introduced into the combustion tube are converted to their stable oxides by a reaction that disturbs the oxygen equilibrium in the carrier gas stream. The momentary depletion in the oxygen concentration in the carrier gas is detected by an oxygen detector and recorded as a negative oxygen peak. The TOD for the sample is obtained by comparing the recorded peak height or area to the peak sizes of the standard TOD calibration solutions, e.g., potassium acid phthalate (KHP).

Prepurified nitrogen from a cylinder passes through a fixed length of tube permeable to oxygen (usually silicone) into the combustion chamber packed with a solid catalyst, the gas scrubber, and then the oxygen detector. The baseline oxygen concentration is obtained as the nitrogen passes through the temperature-controlled permeation tube and can be varied to accommodate different TOD ranges by changing the nitrogen flow rate and the length of permeation tubing.

The combustion chamber is a length of Victor tubing, quartz tube, ceramic tube, or other metal tube that contains a platinum catalyst and is mounted in an electric furnace and held at a temperature of 900°C (1672°F). The aqueous sample is injected into this chamber, and the combustible components are oxidized.

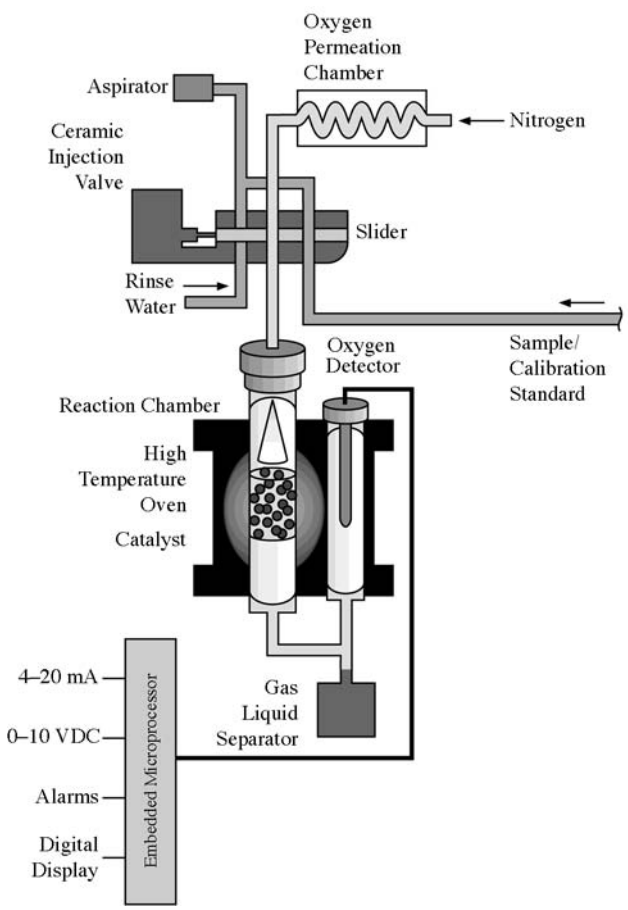

FIG. 8.7i
Basic components of an on-line TOD analyzer. (Courtesy of Ionics Inc.)

Sample Valves

Two basic types of injection valves are in use today, the sliding plate and the rotary sampling valve. Manual injection can be accomplished though a silicone rubber septum, if desired.

Figure 8.7j shows the main features of the sliding plate valve. Upon a signal from a cycle timer, the air actuator temporarily moves the valve to its "sample fill" position. At the same time, an air-operated actuator moves a 20-μl sample through the valve into the combustion tube. A stream of oxygen-enriched nitrogen carrier gas moves the slug of sample into the combustion tube.

Traditionally, sliding plate valves were manufactured from a variety of metals (stainless steel, Hastelloy, Monel, and others), but ceramic sliding plate sampling valves have been developed to provide reduced maintenance for this harsh application.

The rotary sample valve is mainly used for on-stream TOD analyzers. Figure 8.7k shows the cross section of the

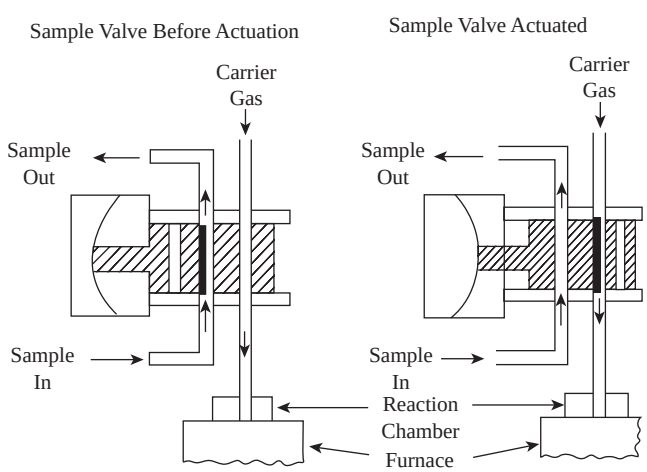

FIG. 8.7j
Automatic sliding plate liquid sample injection value.

© 2003 by Béla Lipták

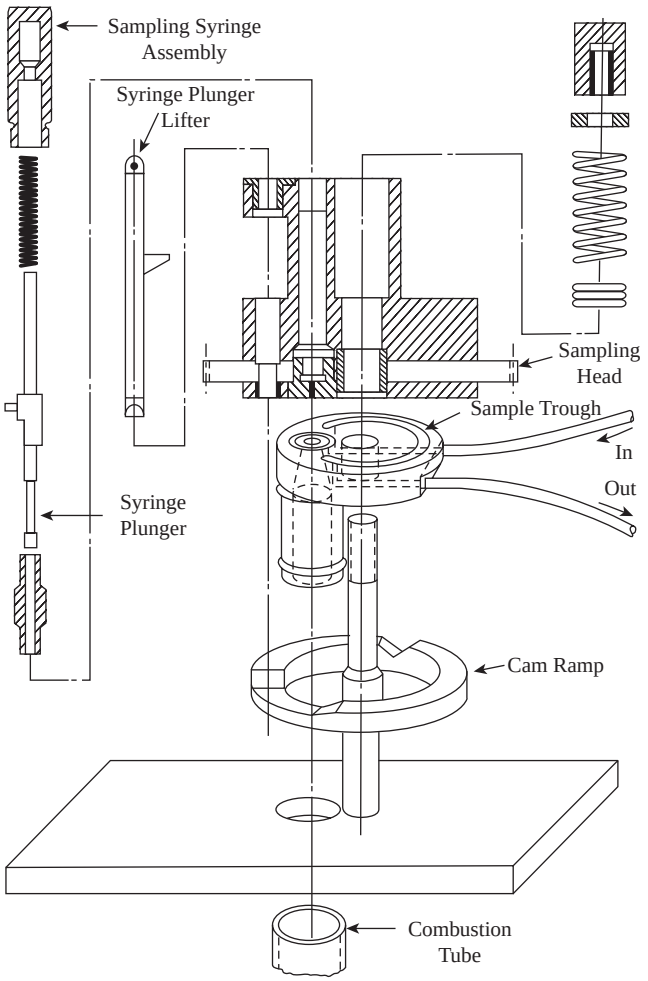

FIG. 8.7k
Rotary sample valve.

valve, in which a motor continuously rotates a sampling head, which contains a built-in sampling syringe. For part of the time, the tip of the syringe is over a trough that contains the flowing sample. Two or more cam ramps along the rotational path cause the syringe plunger to rise and fall, thus rinsing the sample chamber. Just before the syringe reaches the combustion tube, it picks up a 20-μl sample. As it rotates over the combustion tube, it discharges the sample.

Oxygen Detector

One type of TOD oxygen sensor is a platinum–lead fuel cell that generates a current in proportion to the oxygen content of the carrier gas passing through it. Before entering the cell, the gas is scrubbed in a potassium hydroxide solution, both to remove acid gases and other harmful combustion products and to humidify the gas.

The oxygen cell and the scrubber are located in a temperature-controlled compartment. The fuel cell output is monitored and zeroed to provide a constant baseline. The output peaks are linearly proportionate to the reduced concentration of oxygen in the carrier gas as a result of the sample's TOD.

Another type of TOD oxygen detector is a yttrium-doped zirconium oxide ceramic tube that has been coated on both sides with a porous layer of platinum. It is maintained at an elevated temperature and also provides an output that represents the reduction in oxygen concentration in the carrier gas that is a result of the sample's TOD.

A more complete discussion of this detector technology can be found in Section 8.42 ("Oxygen in Gases") under "High-Temperature Zirconium Fuel Cells."

Calibration

Analysis is by comparison of peak heights or areas to a standard calibration curve. To prepare this curve, known TOD concentrations of a primary standard (KHP) are prepared in distilled and deionized water. Standard solutions are stable for several weeks at room temperature. Water solutions of other pure organic compounds can also be used as standards.

Several analyses can be made at each calibration concentration, and the resulting data are recorded as parts per million (ppm) TOD vs. peak height or area. Older instruments utilize a recorder, and within the normal instrument range, the plot is a straight line. Consequently, a single-concentration calibration of the recorder chart in milligrams per liter TOD can be made.

Newer instruments are microprocessor controlled, and the microprocessor stores the calibration results and outputs a result directly as ppm TOD.

Interferences

Nitrate salts and sulfuric acid will normally decompose under sample combustion conditions as follows:

$$2NaNO_3 \xrightarrow[Pt]{900^\circ C} Na_2O + 1\tfrac{1}{2}O_2 + 2NO \qquad \textbf{8.7(1)}$$

$$H_2SO_4 \xrightarrow[Pt]{900^\circ C} H_2O + SO_2 + \tfrac{1}{2}O_2 \qquad \textbf{8.7(2)}$$

This oxygen release results in a proportionate reduction in the TOD reading. The interference from sulfuric acid can be overcome by neutralizing it with sodium hydroxide. Dissolved oxygen in the aqueous sample also becomes an unknown source of oxygen to the combustion reaction and lowers the TOD readings. But unless special precautions are taken, the standard solutions are also at or near saturation, thus automatically minimizing this potential interference. If absolute TOD levels are required, the oxygen equivalent of the interference should be added to the TOD reading.

Oxygen-saturated or air-saturated samples with very low TOD values pose a special problem, which can be circumvented by spiking the sample with a known concentration of a standard solution. The actual TOD will then be the analysis value minus the spiking concentration.

Heavy-metal ions give long-term interferences, usually by eventual reduction of the catalyst efficiency. Replacement of the combustion tube and a thorough cleaning of the catalyst

© 2003 by Béla Lipták

TABLE 8.7l
Application Suggestions for TOD Analyzers

Application	*Purpose*
Waste treatment plant influent	Determines loading of plant
Primary, secondary, and plant effluents	Determines efficiency of treatment and TOD load on the receiving waterway
Enforcement programs	Determines pollution levels
Industrial process control	Determines process efficiency and leaks by continuous monitoring
Research and development	Evaluates waste treatment processes
Stream surveillance	Monitors fresh, estuarine, and marine water quality
Municipal or industrial water treatment plants	Monitors quality of influent water prior to treatment
Boiler feed and high-purity water monitoring	Measures TOD with great sensitivity

is the only remedy. Materials like silanes or siloxanes also combust in the reactor and exhibit a positive TOD, but can leave a residue of silica in the reactor that can coat and desensitize the catalyst.

The catalyst and the reactor components can be coated when the sample is vaporized and combusted in a fashion that leaves some solids behind in the reactor. The total matrix of the sample should be evaluated before committing to a technique, not just the components being measured.

Applications

Table 8.7l lists typical applications for the TOD analyzer. Instruments equipped with the rotary or sliding plate sampling valve lend themselves nicely to multistream analysis, since no carryover of the previous sample is present. If the streams have varying levels of TODs, each stream must be diluted to the basic range of the analyzer by appropriate automatic dilution techniques. On the laboratory analyzers, it is best to sample deionized water when the instrument is in a standby condition.

CORRELATION BETWEEN MEASUREMENT TECHNIQUES

Many regulatory agencies recognize as the basis for oxygen-depleting pollution control only the BOD or COD (preferably BOD) measurements of pollution load. The reason for this is that they are concerned with the oxygen-consuming pollution load on receiving waters, which is related to lowering of the DO due to bacterial activity.

Thus, if the other methods described are to be used to satisfy legal requirements of the oxygen-consuming pollution load in effluents or to measure BOD removal, it is necessary that a correlation be established between the other methods and BOD.

In order to summarize the features of various methods, it is assumed that the BOD is the standard reference method. The salient features of this method are: 1) a measurement of property (the BOD) of the sample, i.e., the amount of oxygen required for bacterial oxidation of bacterial food in the water; 2) dependence of the oxygen demand on the nature of the food as well as on its quantity; and 3) dependence of the oxygen demand on the nature and amount of the bacteria.

Variations in Oxygen Demand

Variations in oxygen demand due to variations in the amount (pounds per gallon) of food in the wastewater are expected; we are less able to deal with variations in oxygen demand when the amount of food is constant but changes occur in its BOD requirements. The same observations apply to the bacterial seed. Thus, variation in oxygen demand due to variation in the number of bacteria or their activity, as well as those due to the changes in the nature of their foodstuffs, leads to a systematic or bias error in BOD measurements, which cannot be predicted or corrected for.

The standard reference method is therefore inherently variable—one subject to analytical error. Researchers in an interlaboratory comparative study[14] employing a synthetic waste found standard deviations around the mean of ±20% for BOD and ±10% for COD.

BOD and COD Correlation

Another extensive study[15] concluded the following: 1) A reliable statistical correlation between BOD and COD of a wastewater and its corresponding TOC or TOD can frequently be achieved, particularly when the organic strength is high and the diversity in dissolved organic constituents is low. 2) The relationship is best described by a least squares regression with the degree of fit expressed by the correlation coefficient—this applies to the characterization of individual chemical-processing and oil-refining wastewaters, not to all types of samples across the board. 3) The observed correspondence of COD-TOD was better than that of COD-BOD for the wastewaters. It was difficult to correlate BOD with TOD, particularly when the wastewater contained low concentrations of complex organic materials. 4) The BOD-COD or BOD-TOC ratios of an untreated wastewater are indicative of the biological treatment possible with the particular wastewater. As these ratios increased, higher treatment efficiencies by biological methods in terms of organic removal were noted.

BOD and Other Methods Several papers have indicated high correlation between BOD and other methods. This can be achieved when the nature of the pollutant is constant and only its amount changes. For complex and varying mixtures, it is difficult or impossible to obtain good correlations.

An interesting example is given in the work of Nelson et al.,[16] who discuss a pyrolytic method combined with flame ionization detector (FID) (Section 8.12) detection. Values from the new method agreed with BOD values within ±15%

© 2003 by Béla Lipták

for BOD values greater than 100 ppm on raw sewage and primary effluent.

However, discrepancies of several hundred percent were found when the BOD was 20 ppm or less. These poor results can be attributed to marked variation in biodegradability of carbonaceous products in the secondary effluent, compared with products before treatment, as well as to the very small amount of total material left.

The ability to truly correlate one measurement to another requires more than measurements that are measuring often-related properties. Correlation can also be highly dependent on the matrix of the sample being measured. Different measurement techniques often respond differently to different backgrounds and to different interferences.

For example, techniques like FID and ultraviolet (UV) absorption (Section 8.61) are being sold to make correlated COD measurements. Obviously, they are not measuring the ability to oxidize the sample. What they are measuring is a generalized organic content of a sample and trying to predict what a COD value of that sample would be, assuming the determined organic content represents it. While this is possible for some very well characterized samples, this approach often fails to adequately handle surprises (process upsets or changes that result in significant sample matrix changes).

Many types of analyzers can measure various components that contribute to the BOD, COD, or TOD loading of a sample and, under the right circumstances, they can be reliably correlated to an appropriate BOD, COD, or TOD result. Many of these analyzers offer advantages like continuous or faster analysis and lower purchase, operating, and maintenance costs.

The key to instrument selection in this case is to insure that you have selected one that is appropriate for your process, sample, and measurement requirements. If in doubt, usually the safest path is to go with an instrument that is compatible with your sample and most directly measures the property of interest.

References

1. *American Public Health Association: Standard Methods for the Examination of Water and Wastewater,* 12th ed., New York: APHA, 1965.
2. *Industrial Water: Atmospheric Analysis, Book of ASTM Standards*, Part 23, Method D 2329-68, Philadelphia: ASTM, 1969.
3. Gair, G. M. and Geyer, J. C., *Water Supply and Waste-Water Disposal,* New York: John Wiley & Sons, 1954.
4. Ford, D. L., Eller, J. M., and Gloyna, E. F., "Analytical Parameters of Petrochemical and Refinery Waste Waters," *Journal of the Water Pollution Control Federation,* Vol. 43, 1971, p. 1713.
5. Tool, H. R., "Manometric Measurement of BOD," *Water Sewage Works,* Vol. 114, 1967, p. 211.
6. Arthur, R. M., "An Automated BOD Respirometer," *Proceedings of the 19th Industrial Waste Conference,* Part 2, Purdue University, May 1964, p. 628.
7. Arthur, R. M. and Hursta, W. N., "Short-Term BOD Using the Automatic Respirometer," *Proceedings of the 23rd Industrial Waste Conference,* Part 1, Purdue University, May 1968, p. 242.
8. Riegler, G., "3-Minute BOD Assessments," *InTech,* May 1987.
9. Clark, J. W., New Mexico State University, Engineering Experiment Station, Bill 11, 1959.
10. Young, J. C. and Baumann, E. R., "Demonstration of the Electrolysis Method for Measuring BOD," Engineering Research Institute, Iowa State University, Ames, IA, progress report 1, March 1970; progress report 2, March 1971.
11. Stenger, V. A. and Van Hall, C. E., "Rapid Method for Determination of Chemical Oxygen Demand," *Analytical Chemistry,* Vol. 39, 1967, p. 206.
12. Goldstein, A. L., Katz, W., Meller, F. H., and Murdoch, D. M., *Total Oxygen Demand: A New Automatic Instrumental Method for Measuring Pollution and Loading on Oxidation Process*, Watertown, MA: Ionics Inc., 1968.
13. Clifford, D. E., "Automatic Measurement of Total Oxygen Demand," Proceedings of the 23rd Industrial Waste Conference, Purdue University, May 1968.
14. Ballinger, D. G. and Lishka, R. J., "Reliability and Precision of BOD and COD Determinations," *Journal of the Water Pollution Control Federation,* Vol. 34, 1962, p. 470.
15. Ford, D. L., Eller, J. M., and Gloyna, E. F., "Analytical Parameters of Petrochemical and Refinery Waste Waters," *Journal of the Water Pollution Control Federation,* Vol. 43, 1971, p. 1712.
16. Nelson, K. H., Lysyj, I., and Nagano, J., "Pyrolytic Analyzer Detects Organic Matter in Wastewaters," *Water Sewage Works,* Vol. 14, January 1970.

Bibliography

Adams, V., *Water and Wastewater Examination Manual,* 1990.

ASTM Standards, Vols. 11.01 and 11.02, "Water and Environmental Technology" West Conshohocken, PA: American Society for Testing Materials, published yearly.

Baird, R. B. and Smith, R. K., *Third Century of Biochemical Oxygen Demand,* Water Environment Federation, 2002.

D'Alessandro, P. L. and Characklis, W. G., "Simple Measurement Technique for Soluble BOD Progression," *Water and Sewage Works,* September 1972.

Davis, E. M., "BOD vs. COD vs. TOC vs. TOD," *Water and Wastes Engineering,* February 1971.

Dawson, R., *Data for Biochemical Research,* Oxford: Oxford University Press, 1990.

Fresenius, W. et al., *Water Analysis,* New York: Springer-Verlag, 1988.

Geisler, C., Andrews, J. F., and Schierjott, G., "New COD Analysis Arrives," *Water and Wastes Engineering,* April 1974.

Hill, N. H., "Carbon Analyzers for Contaminants in Water," *InTech,* March 1969.

McNeil, B. and Harvey, L., *Fermentation: A Practical Approach,* Oxford: IRL Press, 1990.

Ratliff, T. A., *The Laboratory Quality Assurance System,* New York: Van Nostrand Reinhold, 1989.

Safranko, J. W., Schuler, J. D., and Small, J. W., "A Low-Temperature Microprocessor-Controlled TOC Analyzer," *American Laboratory,* August 1983.

Shaw, A., Mason, L., and Miller, R., "The Use of Online Respirometric Monitoring and Dose Response Testing to Determine the Best Process Alternatives for an Existing Petrochemical Waste Treatment Facility," Proceedings of the WEFTEC2001 Conference, Water Environment Federation, October 2001.

Small, J. W., "New Advances in TOC Analysis," *Pollution Analysis,* September 1980.

Tool, H. R., "Manometric Measurement of the Biochemical Oxygen Demand," *Water and Sewage Works,* June 1967.

© 2003 by Béla Lipták

8.8 Calorimeters

P. FOUNDOS (1982) **G. LIPTÁK** (1995) **D. LEWKO** (2003)

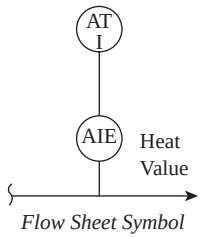

Flow Sheet Symbol

Type of Designs:	A. Direct measurement by burning of fuel gas B. Inferential by calculation from composition and physical analysis, including chromatography (Section 8.12), mass spectrometry (Section 8.29), etc. C. Special designs such as reaction calorimeters of Mettler-Toledo, designs for the measurement of partial molar heat capacities of biopolymers by CSC, and total absorption calorimeters made by Opal
Applications:	1. Custody transfer 2. Process monitoring and control 3. Blending and mixing of fuel gases 4. Gas and liquefied natural gas (LNG) processing 5. Compliance recording
Operation:	a. Continuous b. Cyclic c. Portable
Performance:	(1) Controlled environment (2) Varying ambient (3) High speed of response (4) Inaccuracy ±0.5% of full scale or better (5) Inaccuracy ±1.0% of full scale or better (6) Inaccuracy ±2.0% of full scale or better
Area Classification:	(a) General purpose (b) Explosion-proof
Cost:	Under $10,000 [A, 2/3, a, (3)/(5)/(6)] $10,000 to $15,000 [A, 2, a, (3)/(5)/(6), (b)] $15,000 to $30,000 [A/B, 2/3, a/b, (1)/(2)/(4), (a)/(b)]
Partial List of Suppliers:	Ametek Process & Analytical Instruments (www.thermox.com) Cosa Instrument Corp. (www.cosa-instrument.com) Daniel Measurement and Control (www.danielind.com) Delta Instrument LLC (www.deltainstrument.com) EG & G Chandler Engineering/Ranarex (www.chandlerengineering.com) Galvanic Applied Sciences (www.galvanic.ab.ca)

INTRODUCTION

This section does not discuss the special calorimeter designs such as reaction calorimeters (Mettler-Toledo), designs for the measurement of partial molar heat capacities of biopolymers (CSC), or total absorption calorimeters (Opal), but only directs the reader to the web pages of their respective suppliers.

Inferential calorimeters, which determine the heat content by calculation from composition and physical analysis, including chromatography (Section 8.12) and mass spectrometry

© 2003 by Béla Lipták

(Section 8.29), are not covered in detail either, because they are discussed in the above-noted sections.

Calorimeters are analyzers that measure the heat value or energy content of gaseous fuels. There are two broad categories of this type of instrument: those that can be considered true calorimeters, because they are actually burning the gas and directly measuring its heating value, and inferential calorimeters, which analyze the composition of the gas or measure a physical parameter to determine the heating value.

TERMINOLOGY

Basic terms and definitions used in gas calorimetry are given here and may also be found in the references listed at the end of this section. A summary of the measurement calibration techniques is outlined in Table 8.8a.

British Thermal Unit

A British thermal unit (BTU) is the amount of heat required to raise the temperature of 1 lb of water by 1°F at or near 60°F.

BTU Dry

This is the heating value that is expressed on a dry basis. The common assumption is that pipeline gas contains 7 lb (or less) of water vapor per million standard cubic feet (SCF).

BTU Saturated

This is the heating value that is expressed on the basis that the gas is saturated with water vapors. This state is defined as the condition when the gas contains the maximum amount of water vapors without condensation, when it is at base pressure and 60°F.

Combustion Air Requirement Index

The combustion air requirement index (CARI), a dimensionless number, indicates the amount of air required (stoichiometrically) to support the combustion of a fuel gas. Mathematically, the CARI is defined by Equation 8.8(1):

$$\text{CARI} = \frac{\text{Air/Fuel Ratio}}{\sqrt{\text{s.g.}}} \qquad \textbf{8.8(1)}$$

Gross Calorific Value

This is the heat value of energy per unit volume at standard conditions, expressed in terms of BTU per SCF, kilocalorie per cubic Newton meters (Kcal/N.m^3), or other equivalent units.

Net Calorific Value

This the measurement of the actual available energy per unit volume at standard conditions, which is always less than the gross calorific value by an amount equal to the latent heat of vaporization of the water formed during combustion.

Wobbe Index

American Gas Association (AGA) 4A defines the Wobbe Index as a numerical value that is calculated by dividing the square root of the relative density (a key flow orifice parameter) into the heat content (or BTU/SCF) of the gas. Mathematically, the Wobbe Index is defined by Equation 8.8(2):

$$\text{Wobbe index} = \frac{\text{calorific value}}{\sqrt{\text{specific gravity}}} \qquad \textbf{8.8(2)}$$

The Wobbe Index accounts for composition variations in terms of their effect on the heat value and specific gravity, which affect the flow rate through an orifice. In essence, the Wobbe Index is a measurement of the available potential heat, and it can be used in conjunction with the gas flow measurement to produce a measurement of heat flow rate (see Section 2.5).

In the following paragraphs, some basic terms and gas calorimeter design variations are described. The American Society for Testing Materials (ASTM) Standards listed in the references serve to compliment this information.

UNITS, ACCURACY, AND OUTPUT SIGNALS

When calorimeters are used for custody transfer of natural gas, the unit of measurement is often the BTU. The Natural Gas Policy Act of 1978 (15USC 3311, Supplement 1981) established the BTU as the basic measurement of natural gas for pricing purposes, supplanting the traditional volume bases measurement. As a result, the market demand for custody transfer type calorimeters increased markedly. In Europe and in other countries where the metric system is used, natural gas calorimeters are calibrated in mega-Joule units.

The response time can be a critical consideration in selecting the right analyzer for closed-loop control applications. On the other hand, for custody transfer applications, one should maximize accuracy even at the expense of response time, while improved response time even at the expense of accuracy is justified in some critical process control applications.

The analog output of the analyzer may represent the gross calorific value (sometimes referred to as upper heating value or gross heating value), the net calorific value (sometimes referred to as lower heating value or net heating value), or the Wobbe Index.

© 2003 by Béla Lipták

TABLE 8.8a

Summary of Calorimeter Features and Specifications

	Type				Application[a]					Operation					Performance				
	Area Class																		
Type	Directt	Inferential	General Purpose	Ex-Proof	1	2	3	4	5	Continuously	Cyclic	Standard Sample	Empirical Calibration	Ambient Limits °F (°C)	Local Readout	Remote Transmitters	Range in Btu Full Scale	Accuracy ± % of Full Scale	Speed of Response (90%)
GROSS CALORIFIC VALUE																			
Water ΔT	✓		✓		✓				✓		✓		✓	72–77 (22–25)	✓	✓	130–3300	0.5	3 min
Air ΔT	✓		✓		✓				✓	✓		✓		72–77 (22–25)	✓	✓	120–3600	0.5	15 min
Gas Chromatograph		✓	✓	✓	✓	✓		✓	✓	✓		✓		0–100 (–18–38)		✓	Any	0.5	10 min
Adiabatic Flame Temperature	✓		✓	✓	✓				✓	✓		✓		N/A	✓	✓	N/A	0.5	N/A
NET CALORIFIC VALUE																			
Airflow Calorimeter	✓		✓	✓		✓	✓	✓		✓	✓	✓		50–90 (10–32)	✓	✓	130–3300	1.0	8 sec
Gas Chromatograph		✓	✓	✓							✓	✓		0–128 (–18–53)		✓	Any	0.5	10 min
Expansion Tube Calorimeter	✓		✓				✓	✓		✓		✓		N/A	✓	✓	120–3300	1.0	3.5 min
Specific Gravity		✓	✓	✓		✓	✓			✓				0–128 (–18–53)	✓	✓	Varies	2.0	N/A
Process Chromatograph	✓		✓				✓			✓		✓		60–90 (16–32)	✓	✓	150–3600	2.0	4.5 min
Thermopile Calorimeter	✓	✓	✓			✓		✓		✓		✓		N/A		✓	150–3300	2.0	55 sec
WOBBE INDEX																			
Airflow Calorimeter	✓		✓	✓		✓	✓	✓		✓		✓		50–110 (10–43)	✓	✓	130–3300	0.75	8 sec
Gas Chromatograph		✓	✓	✓	✓	✓		✓	✓		✓	✓		0–120 (–18–49)		✓	Any	0.5	10 min
Expansion Tube Calorimeter	✓		✓				✓	✓		✓		✓		N/A	✓	✓	120–3300	1.0	3.5 min
Thermopile Calorimeter	✓		✓			✓	✓	✓		✓		✓		N/A		✓	150–3300	2.0	55 sec

[a] See feature summary at begining of section.

© 2003 by Béla Lipták

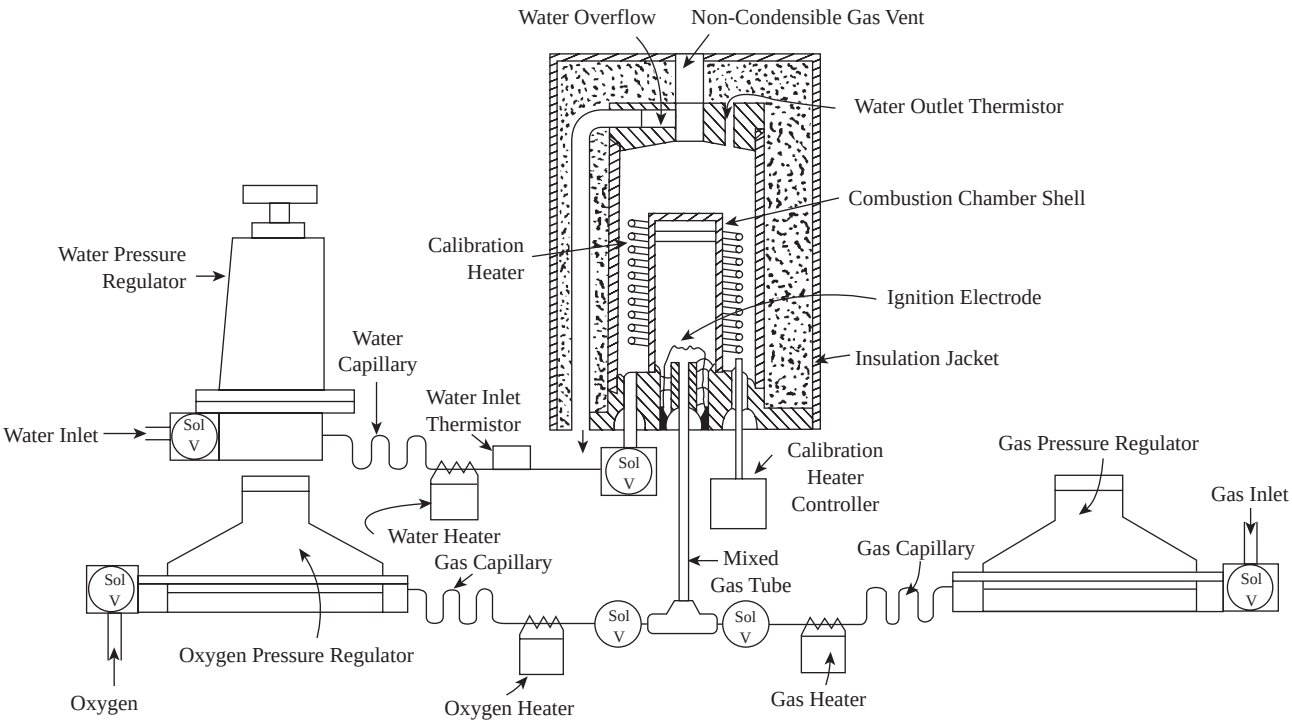

FIG. 8.8b
Water-temperature-rise-type calorimeter provided with electric heater for direct calibration.[1]

DESIGN VARIATIONS

In the following paragraphs, a brief description is given of the various gas calorimeter designs that are used to detect the heating value of gaseous fuels and waste gases.

Water-Temperature-Rise Calorimeter

One variation of this design is illustrated in Figure 8.8b. Here a constant (capillary-controlled) flow rate of the gas is mixed with a constant flow rate of oxygen (or air) and is burned. The resulting heat of combustion is removed by a constant flow rate of water. Both the flow rates and the temperatures of the entering streams are controlled at a constant value.

Thermistors measure the temperature of the water entering and leaving. The temperature difference or temperature rise is therefore a direct measure of the heating value of the burned gas. This calorimeter can be compensated for the variations in barometric pressure and can therefore measure the gross calorific value of fuel or waste gases.

Figure 8.8b also shows a calibration heater. During the calibration cycle this electrical resistance heater is turned on while the gas flow is off. Thereby a known accurately determined amount of heat is introduced and the corresponding temperature rise on the water side is measured. When the temperature rise is the same as it was when gas was being burned, the amount of electric heat introduced matches the heating value of the gas. This type of calibration can be made at any time and for any reading of the calorimeter.

Air-Temperature-Rise Calorimeter

The measurement is accomplished by continuously transferring all the combustion heat of a metered quantity of gas to a metered quantity of air (see Figure 8.8c). The temperature rise of the air is measured and is related directly to gross calorific value of the gas. The unit can be modified so that the heat-absorbing air is not separated from the products of combustion, thus resulting in a more accurate measurement of the net calorific value.

Airflow Calorimeter

In this design the variations in the heat released by the continuous burning of the fuel gas are offset by a continuous, varying airflow that maintains the temperature of the products of combustion constant (see Figure 8.8d). Thus, the airflow is correlated to the heat value of gas or to the Wobbe Index. With the addition of a constant-volume gas-metering pump, and compensating for specific gravity variations, the instrument can be calibrated for the net calorific value.

© 2003 by Béla Lipták

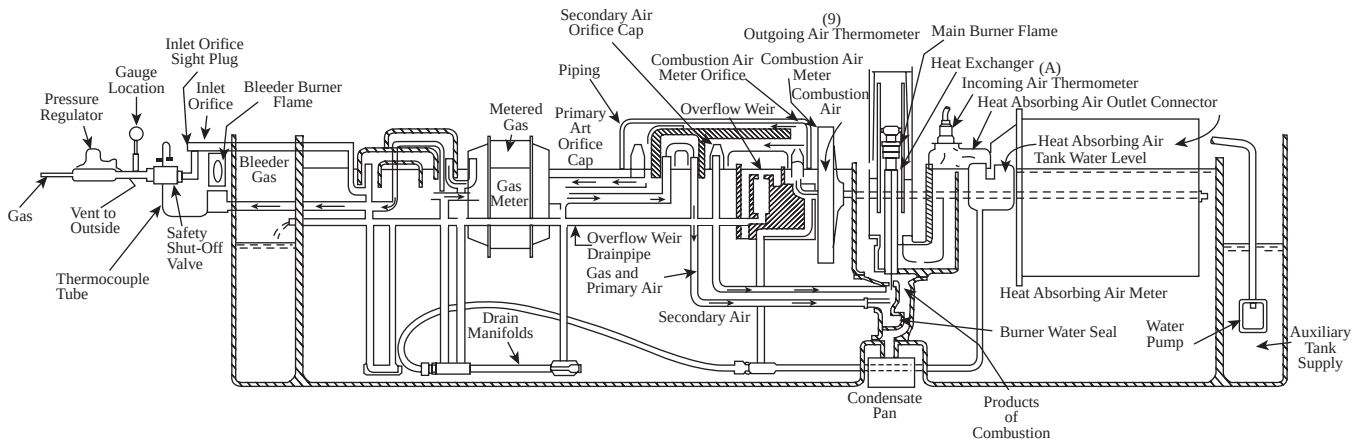

FIG. 8.8c
Air ΔT calorimeter.

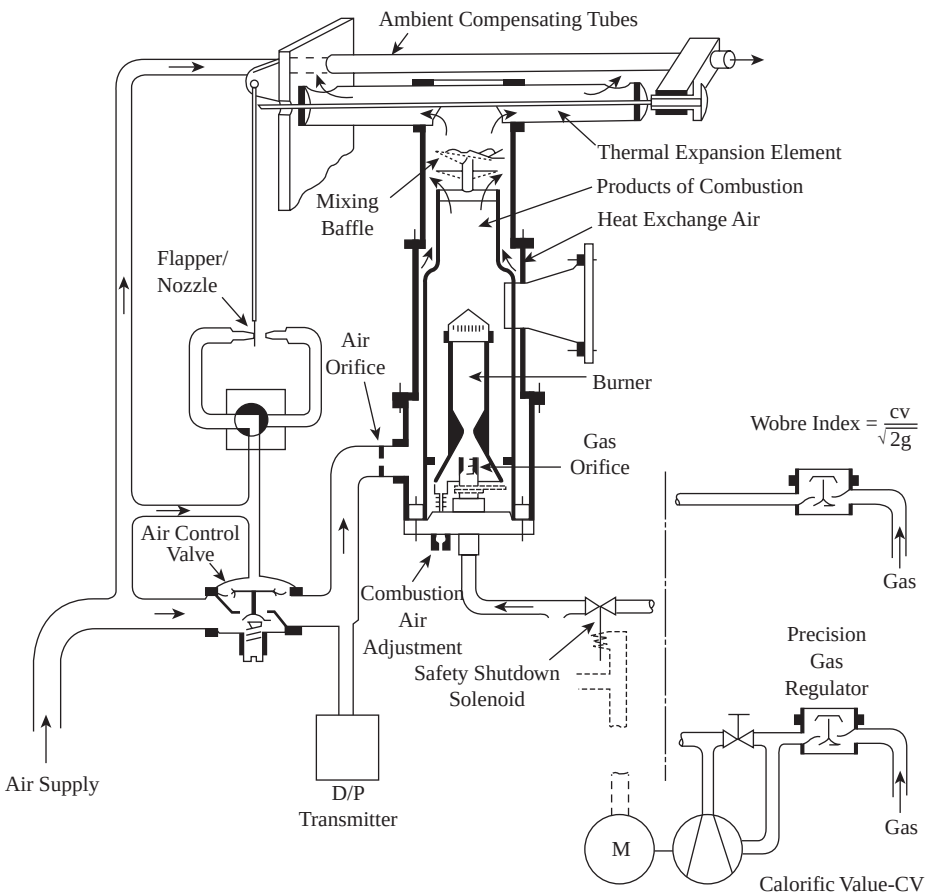

FIG. 8.8d
Airflow calorimeter.

Residual Oxygen Calorimeter

In this design, a continuous gas sample is mixed with dry air at a precisely maintained ratio. The ratio is dependent on the BTU range of the gas to be measured. The fuel–air mixture is oxidized in a combustion furnace, and the oxygen concentration in the spent sample is measured using a zirconia oxide cell. With the addition of a precision specific gravity cell, the analyzer can be calibrated to provide a measurement corresponding to the calorific value of the gas.

© 2003 by Béla Lipták

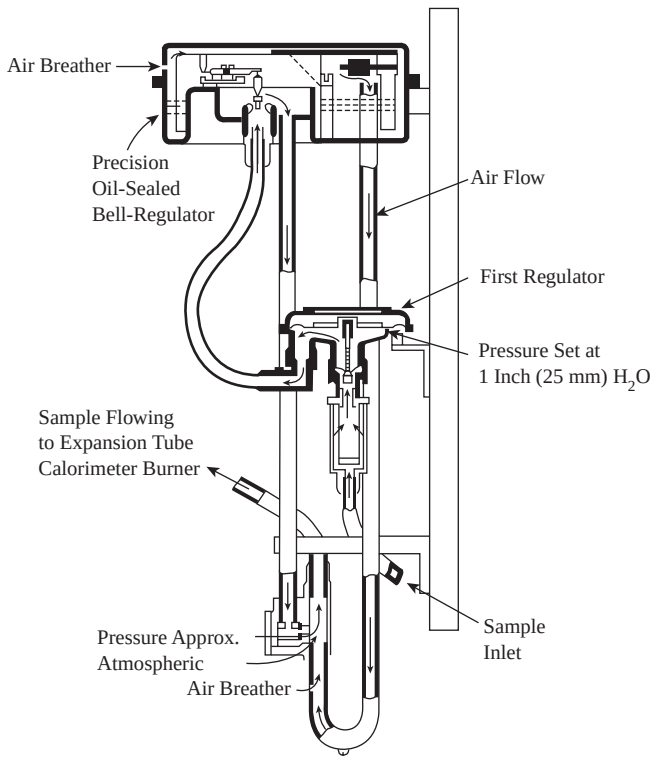

FIG. 8.8e
Precision regulator used for expansion tube-type calorimeter. (Courtesy of Cosa Instrument Corp.)

Chromatographic Calorimeter

A conventional chromatograph can also be used to analyze gas composition (see Section 8.12), and a microprocessor can be used to calculate the heating value and specific gravity of the gas from empirical data held in memory by the microprocessor. This information can be used to calibrate for the gross or net calorific value of the Wobbe Index.

Expansion Tube Calorimeter

In this design, the gas sample is delivered through a precision regulator system (Figure 8.8e), which is independent of specific gravity and atmospheric pressure. The gas is burned at the base of a differential expansion tube unit that responds to the temperature of the products of combustion and excess air. The differential signal is calibrated as the net calorific value. Modification of the regulator to respond to specific gravity changes allows calibration to the Wobbe Index.

Adiabatic Flame Temperature

The gross calorific value of fuel gas is proportionate to the ratio of air to a fuel that maximizes the adiabatic flame temperature of the mixture. Therefore, in this design, flows are controlled and two burners are used to obtain the mathematical derivative of the flame temperature composition that allows calibration for gross calorific value.

Thermopile Calorimeter

The thermopile calorimeter measures the temperature of the hot products of combustion mixed with a constant volume of air supplied by a fan. The sample to the burner is provided with an orifice bypass, which is needed for specific gravity compensation; thus, the resulting measurement is in terms of net calorific value. To measure the Wobbe Index, the bleed is blocked and the sample goes through the burner.

APPLICATIONS

There are five general areas of application:

1. *Custody transfer:* Sale or purchase of fuel gas with accuracy being the primary consideration.
2. *Process monitoring and control:* To effect on-line manual or automatic control of process or efficient burning of the gas by using heat value measurement as one of the measured variables. Such applications include feed-forward control of fuel gas-fired heaters or boilers, stove-firing control, vaporizer control, and synthetic natural gas (SNG) reactor control. In these applications, measurement of heat value is important as a process measurement for efficient control of energy consumption, or to limit the flow of heat to an energy-sensitive process. This application requires high speed of responses as well as reliability to achieve effective control.
3. *Blending and mixing of fuel gas:* To obtain a uniform quality gas or to utilize waste or by-product gases by blending them into the main fuel gas. Blending is often used to achieve a desired ratio of streams such as propane/air or blast furnace gas/coke oven gas. However, when by-product or waste gases are to be injected into a stream and they vary significantly in quantity, monitoring of the mixture is necessary to make proper use of the fuel. Speed of response and reliability are essential.
4. *Processing of gas and liquefied natural gas (LNG) operations:* LNG must be vaporized and conditioned for efficient consumption. Coke oven and blast furnace gases are the main fuels used by the steel industry, and refinery gas is a major by-product that is used in petroleum refining. All these fuel gases are produced in specific processing operations that require monitoring and conditioning for efficient use.
5. *Compliance recording:* For government-regulated energy transfer by pipeline and utility distributors to the consumers. Accuracy and traceability are essential criteria.

© 2003 by Béla Lipták

SAMPLE CONDITIONING

The requirements for the sample conditioning system are dependent on the limitations of the selected analyzer and the minimum, normal, and maximum limits of the process stream being monitored. In many industrial applications, fuel gases are generated as by-products of other processes, and these "off-gases" can be extremely dirty and require sample conditioning. In some cases, special consideration must be given to the dew point of the off-gas when designing the sample conditioning system. Refer to Sections 8.2 and 8.3 for sample system options and design features.

CONCLUSION

Gaseous fuel energy is a costly commodity that is being consumed with much more care and efficiency than in the past. The key to its efficient consumption is measuring the available heat of the fuel gas. There are several calorimeters available for reliable on-line measurement of gas heating values. For closed-loop control applications, the designs that provide a speed of response of less than a minute (Table 8.8a) are preferred.

In addition, there are several manufacturers that offer calorimeters specifically for custody transfer applications. These analyzers offer improved accuracy at the expense of response time (Table 8.8a).

Reference

1. Christopher, D. E., "Direct Energy Measurement," *Measurements and Control*, December 1991.

Bibliography

AGA, Report 3.
AGA, Report 8.
AGA Gas Measurement Manual, Section 11A.2, "Determination of Heating Value of Gas," p. 11A2.1.
Armstrong, G. T., "Standard Combustion Data for the Fuel Gas Industry," AGA, 1972.
ASTM Standard D 900-55(70), *Calorific Value of Gaseous Fuels by the Water Flow Calorimeter*, Philadelphia: American Society for Testing and Materials, 1970.
ASTM Standard D 1826-77, *Test for Calorific Value of Gases in Natural Gas Range by Continuous Recording Calorimeter*, Philadelphia: American Society for Testing and Materials, 1977.
ASTM D 1945, "Analysis of Natural Gas by Gas Chromatography," Philadelphia: American Society for Testing and Materials.
Bowles, E. B., "Small Errors in BTU Measurement Can Add Up to Large Losses in Revenue," *Pipe Line & Gas Industry*, November 2000.
Broadwater, S. R., "Columbia Gas Moves toward Heating-Value Measurement," *Oil and Gas Journal*, August 25, 1980.
Christopher, D. E., "Direct Energy Measurement," *Measurement and Control*, December 1991.
Distribution Conference 72-D-76, American Gas Association, Arlington, VA, 1972.
Foundos, A. P., "Measuring Heat Release Rate from Fuel Gases," *Instrumentation Technology*, Instrument Society of America, 1977.
GPA, "Calculations of Gross Heating Value, Relative Density and Compressability Factor for Natural Gas Mistures from Compositional Analysis."
GPA, "Standard 2145-Table of Physical Constants for Hydrocarbons and Other Compounds of Interest to the Natural Gas Industry."
GPA Reference Bulletin, "Heating Value as a Basis for Custody Transfer of Natural Gas," 1984.
Green, D. and Perry, R. H., *Perry's Chemical Engineer's Handbook*, 6th ed., New York: McGraw-Hill, 1984.
Hawkins, J. and McGowan, A., "Theoretical Introduction to the Use of a Residual Oxygen Measurement Method for the Analysis of Combustion Air Index (CARI) and the Wobbe Index of Fuels," *ISA Chicago*, October 2002.
Kizer, P., "Natural Gas Energy Determination Review," ISA Proceedings, 1991.
Kizer, P., "Energy Measurement Using On-Line Chromatography," in *71st International School of Hydrocarbon Measurement*," 1996.
Kizer, P., "Operation of On-Line Gas Chromatographs," in *American School of Gas Measurement*, 1998.
Lange, N. A. and Forker, G. M., *Handbook of Chemistry*, 10th ed., New York: McGraw-Hill, 1967, pp. 842–843, and Columbia Gas System Data.
Larson, B., "Heating Value Technologies for 2001," in *Winnipeg CGA Gas Measurement School*, June 5, 2001.
Lide, D. R., *Handbook of Chemistry and Physics*, 71st ed., 1990–1991.
McCoy, R., "BTU Determination by Process Chromatograph," Applied Automation, Inc., a subsidiary of Phillips Petroleum.
Melrose, D. C., "Comparison of Calculated and Measured Heating Value of Natural Gas," presented at AGA Distribution Conference 72-D-2, American Gas Association, Arlington, VA, 1972.
Pannill, W. and Sharples, R. J., "Calculation of Gas Heating Value Is Complicated by the Courts," *Oil & Gas Journal*, July 2, 1984.

© 2003 by Béla Lipták

8.9 Carbon Dioxide

R. A. HERRICK (1974, 1982) **B. G. LIPTÁK** (1995, 2003)

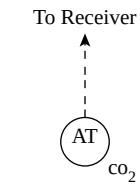

Flow Sheet Symbol

Types of Sensors:	a) Nondispersive infrared (NDIR); see Table 8.9a for IR analyzer designs and applications b) Gas filter correlation (GFC) c) Orsat
Sample Pressure:	Up to 15 PSIG (104 kPa), but atmospheric or near atmospheric is normal
Sample Temperature:	Up to approximately 120°F (49°C) not a consideration when freeze-out trap is used
Sample Flow Rate:	Generally less than 0.5 acfm (2.35×10^{-4} m^3/sec); typically 1 to 2 l/min
Inaccuracy:	a) Can be as high as ±0.2 ppm; typically ±1% to ±2% of full-scale range b) 1% to 2% of full scale, including drift c) Laboratory procedure
Ranges:	a) 0 to 2000 ppm, 0 to 3000 ppm, 0 to 5000 ppm, 0 to 1%, 0 to 2%, 0 to 5%, 0 to 10%, 0 to 20%, and 0 to 100% (see Table 8.9b for overall capability) b) 0 to 5 ppm, 0 to 10 ppm, 0 to 20 ppm, 0 to 50 ppm, 0 to 100 ppm, 0 to 500 ppm, 0 to 1000 ppm, 0 to 2000 ppm (low detectable limit is 0.1 ppm)
Response:	a) Determined by cell volume and sampling rate; typically less than 30 sec b) 90 sec with 30-sec signal averaging time
Costs:	Portable, battery-operated, diffusion type monitor with two alarm settings, digital display, and 4- to 20-mA output is $1500; permanently installed, explosion-proof NDIR analyzer with recorder is about $10,000.
Partial List of Suppliers:	Advanced Pollution Instruments API (www.teledyne-api.com) AMC (Armstrong Monitoring Corp.) (www.armstrongmonitoring.com) Ametek/Thermox (www.thermox.com) Bran & Luebbe (www.branluebbe.com) CEA Instruments (www.ceainstr.com) Dasibi Environmental Corp. (www.dasibi.com) Delphian Corp. (www.delphian.com) Ecotech (www.ecotech.com.au) E&E Process (www.process-controls.com) EMS (Environmental Monitoring Systems) (www.emssales.com) Enviro Technology (www.et.co.uk) Foxboro-Invensys (www.foxboro.com) Horiba Instrument Inc. (www.nettune.net) Innova Air Tech Instruments (www.inniva.dk) International Sensor Technology (www.intlsensor.com) IT Group (www.theitgroup.com) MSA Instrument Div. (www.msanet.com) Purafil Inc. (www.purafilonguard.com) Sensidyne Inc. (www.sensidyne.com) Servomex Co. (www.servomex.com)

© 2003 by Béla Lipták

Sieger Gasalarm; Siemens Energy & Automation (www.sea.siemens.com)
Sierra Monitor Corp. (www.sierramonitor.com)
Sigrist-Photometer Ltd. (www.photometer.com)
Teledyne Analytical Instruments (www.teledyne-ai.com)
Thermo Environmental Instruments (www.thermoei.com)
Thermo Gas Tech (www.thermo.com)
Topac (www.topac.com)
Yokogawa Corp. of America (www.yca.com)

INTRODUCTION

The measurement of carbon dioxide in the ambient air is the primary concern of geophysicists, rather than of the air pollution control engineer. The precise measurement of the carbon dioxide content of the atmosphere is of significant concern in determining long-term changes in the composition of the atmosphere. The measurement techniques used by geophysicists are highly precise compared to the techniques used for air quality- or air pollution-related measurements.

Air quality-related measurements can be used to monitor the return air quality from occupied spaces and, based on those measurements, to modulate the rate at which fresh air is being introduced. In air pollution-related applications, carbon dioxide is hardly ever measured in the ambient air. It is usually measured at emission points since some combustion equipment regulations are stated in terms of allowable pollutant discharges corrected to 50% excess air.

AMBIENT AIR MEASUREMENT

The precise knowledge of the carbon dioxide concentration in the atmosphere is necessary. An increase in global carbon dioxide concentration of only 1% (or about 3 ppm) has significant consequences on the weather. The instruments used to measure atmospheric carbon dioxide concentrations must, of necessity, be highly precise, such as the gas filter correlation (GFC) units discussed later.

Nondispersive Infrared Type

These instruments are discussed in detail in Section 8.27. Since the absorption bands of water and carbon dioxide somewhat overlap, a freeze-out trap (–80°C or –112°F) is often used in the sample preparation system to remove the water prior to the measurement.

TABLE 8.9a
IR Analyzer Applications Summary

			Organic Vapors				
Analyzer	*Carbon Monoxide*	*Carbon Dioxide*	*Simple Molecules*	*Complex Molecules*	*Organic Liquids*	*Solids (Reflection)*	*Comments*
NDIR	✓	✓	✓				Single-component analysis: ethylene, CO, acetylene, methane, etc.
Mid-IR filter	✓	✓	✓	✓	✓		Single-component analysis: same as above, including ammonia, vinyl chloride, carbon tetrachloride, methyl ethyl ketone, ethylene dichloride, etc.
Near-IR filter					✓	✓	Single-component analysis: ethylene dichloride, water, phenol, methyl alcohol, etc.; moisture in solids
Correlation spectrometer	✓						Stack analysis, single-component gas analysis
Multiple-filter near-IR							Multiple components for cereal, meat, and paper analysis
Multiple-filter mid-IR	✓	✓	✓	✓	✓		Automotive exhaust analysis (CO, CO_2, –CH); multiple components for mike analysis, multiple components of gases using a programmable circular variable filter

© 2003 by Béla Lipták

TABLE 8.9b
Typical Applications for NDIR Analyzers

Gas	*Minimum Range (ppm)*	*Maximum Range (%)*
Ammonia (NH_3)	0–300	0–10
Butane (C_4H_{10})	0–300	0–100
Carbon dioxide (CO_2)	0–10	0–100
Carbon monoxide (CO)	0–50	0–100
Ethane (C_2H_6)	0–20,000	0–10
Ethylene (C_2H_4)	0–500	0–100
Hexane (C_6H_{14})	0–200	0–5
Methane (CH_4)	0–2000	0–100
Nitrogen oxide (NO)	0–500	0–10
Propane (C_3H_8)	0–300	0–100
Sulfur dioxide (SO_2)	0–500	0–30
Water vapor (H_2O)	0–3000	0–5

When using prepared calibration standard mixtures of carbon dioxide in nitrogen, an inaccuracy of ±0.2 ppm is attainable. At normal atmospheric CO_2 concentration levels of approximately 314 ppm, this error is equivalent to ±0.06%.

Nondispersive infrared (NDIR) type CO_2 monitors for heating, ventilation, and air conditioning (HVAC) and industrial applications are available in both portable and permanently installed designs. The portable units are usually battery operated, and their ambient sample is received by a combination of diffusion and convection effects in the sensor head, without any pumps or filtering. These units are usually provided with digital displays, one or two alarm settings, and analog or digital output signals.

The more expensive, permanently installed or wall-mounted NDIR units often include data loggers, which can store about 1000 readings along with their times and dates. Some of these units can also detect other gases, such as CO, H_2S, or O_2.

Gas Filter Correlation Type

When very accurate low-level measurements are needed, or when background gases that have the potential to interfere with the measurement are present, GFC is used. In these designs, the measuring and reference filters are replaced by gas-filled cuvettes. The reference cuvette is filled with CO_2 and the measuring cuvette usually with nitrogen.

In addition to being unaffected by the presence of background gases, both the accuracy and the response time of these instruments are better than those using filters. If DFC is used in combination with single-beam, dual-wavelength technology, it is virtually immune to obstruction of the optics. This, in turn, prevents drift and thereby reduces the frequency at which recalibration is needed.

SOURCE MEASUREMENT

Measurement of the carbon dioxide, carbon monoxide, and oxygen concentration of flue gases from boilers has been done for many years (see Figure 8.3k). These measurements allow precise setting of boiler operating variables for maximum fuel economy.

Before the use of the infrared analyzer became accepted practice, mechanical instruments were used to continuously determine the carbon dioxide content of flue gases. Their operation was based on the reduction in gas volume resulting from the absorption of carbon dioxide in a strong alkaline solution. This is the principle of the Orsat analyzer, still used as the standard method for manual determination of combustion gas composition.

For air pollution testing purposes, the carbon dioxide content of the flue gas is determined only during the few hours of the test. The usual procedure is to slowly withdraw a low-volume integrated sample into a plastic bag over the duration of the test. The bag sample is then analyzed manually using an Orsat analyzer or instrumentally using a NDIR analyzer.

Bibliography

Annual Book of ASTM Standards, West Conshohocken, PA: American Society for Testing and Materials, 2002.

Ewing, G., *Analytical Instrumentation Handbook*, New York: Marcel Dekker, 1990.

"Gas Detectors and Analyzers," *Measurement and Control*, October 1991.

Lipták, B. G., Ed., *Environmental Engineers' Handbook*, 2nd ed., Chelsea, MI: Lewis Publishers, 1996.

Lipták, B. G., "Saving through CO_2 Based Ventilation," *ASHRAE Journal*, July 1979.

Lodge, J. P., *Methods of Air Sampling and Analysis*, Chelsea, MI: Lewis Publishers, 1988.

Meyers, R. A., Ed., *Encyclopedia of Analytical Chemistry: Instrumentation and Applications*, New York: John Wiley & Sons, 2000.

Sherman, R. E., *Process Analyzer Sample-Conditioning System Technology*, New York: John Wiley & Sons, 2002.

Van den Berg, F. W. J., Hoefsloot, H. C. J. and Smilde, A. K., "Selection of Optimal Process Analyzers for Plant-Wide Monitoring," *Analytical Chemistry*, 74(13), 3105–3111, 2002.

© 2003 by Béla Lipták

8.10 Carbon Monoxide

R. J. GORDON (1974, 1982) **B. G. LIPTÁK** (1995, 2003)

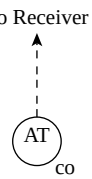

Flow Sheet Symbol

Detector Types:
A. Nondispersive infrared (NDIR); see Table 8.9a for IR analyzer designs and applications
B. Mercury vapor
C. Gas chromatography
D. Electrochemical fuel cell
E. Catalytic oxidation
F. Others, from color change badges, dosimeter tubes, and radon canisters to mass spectrometers, are discussed in Section 8.60.

Reference Method: Infrared

Application: For ambient air monitoring, electrochemical sensors are used most often; for detecting stack gas concentration, infrared sensors are used most often.

Ranges:
A. From 0 to 1, 0 to 5, 0 to 10, 0 to 20, 0 to 50, and 0 to 100 ppm for ambient and 0 to 200, 0 to 500, 0 to 1000, 0 to 2000, 0 to 5000, and 0 to 10,000 ppm for other applications, including stack gas. (See Table 8.9b for overall range capability.)
B. 0 to 50 ppm
C. 0 to 200 ppm
D. 0–50 to 0–500 ppm or more
E. 0 to 500 ppm

Sensitivity: Generally 1 ppm; chromatographs can provide 0.1 ppm and mercury vapor analyzers 0.05 ppm

Response Times: Infrared units are usually adjustable down to a few seconds, while electrochemical sensors require 30 to 60 sec.

Inaccuracy: For NDIR sensors, ±1% of full scale for up to 1000 ppm and ±2 to 3% of full scale for higher ranges. For infrared stack gas analyzers, 2 to 4% of reading can be expected, while for electrochemical ambient monitors, 1 to 3% of full scale is usual.

Costs: Pocket-size, battery-operated personal toxic gas monitor—$400 to $700; continuous industrial electrochemical or infrared monitor/alarm/transmitter—$400 to $2000; portable, battery-operated flue gas analyzer—$2000 to $5000; mercury vapor analyzer—$7500; NDIR with recorder included—about $10,000; gas chromatograph (see Section 8.12)—$25,000 and up

Partial List of Suppliers:
Advanced Pollution Instruments—API (www.teledyne-api.com)
AMC (Armstrong Monitoring Corp.) (www.armstrongmonitoring.com)
Ametek/Thermox (www.thermox.com)
Bran & Luebbe (www.branluebbe.com)
CEA Instruments (www.ceainstr.com)
Dasibi Environmental Corp. (www.dasibi.com)
Delphian Corp. (www.delphian.com)
Drager Safety Inc. (www.draeger-usa.com)
Ecotech (www.ecotech.com.au)
E&E Process (www.process-controls.com)

© 2003 by Béla Lipták

EMS (Environmental Monitoring Systems) (www.emssales.com)
Enviro Technology (www.et.co.uk)
Foxboro-Invensys (www.foxboro.com)
Horiba Instrument Inc. (www.nettune.net)
Innova Air Tech Instruments (www.inniva.dk)
International Sensor Technology (www.intlsensor.com)
IT Group (www.theitgroup.com)
MSA Instrument Div. (www.msanet.com)
Purafil Inc. (www.purafilonguard.com)
Sensidyne Inc. (www.sensidyne.com)
Servomex Co. (www.servomex.com)
Sieger Gasalarm; Siemens Energy & Automation (www.sea.siemens.com)
Sierra Monitor Corp. (www.sierramonitor.com)
Sigrist-Photometer Ltd. (www.photometer.com)
Teledyne Analytical Instruments (www.teledyne-ai.com)
Thermo Environmental Instruments (www.thermoei.com)
Thermo Gas Tech (www.thermo.com)
Topac (www.topac.com)
Yokogawa Corp. of America (www.yca.com)

INTRODUCTION

Carbon monoxide (CO) is a toxic gas and, as such, it is monitored in the ambient air for personal safety reasons. The threshold limit value (TLV) adopted by the American Conference of Governmental Industrial Hygienists for CO is 50 ppm. In industrial applications, lower limits are often used for alarm set points. Electrochemical and catalytic sensors are used in personal toxic gas monitors.

Carbon monoxide is also an indicator of incomplete combustion and, therefore, it is measured to optimize boilers and other combustion processes (see Figure 8.3k). For these applications, the most frequently used analyzer is the nondispersive infrared (NDIR) sensor (Section 8.27).

In the chemical processing industries, when higher sensitivity (0.1 ppm) measurements of carbon monoxide are required, mercury vapor and gas chromatographic analyzers (Section 8.12) are also used. Each of these techniques will be briefly described in the discussion that follows.

CALIBRATION TECHNIQUES

Ambient carbon monoxide analyzers (Table 8.10a) are calibrated with gas mixtures of known concentrations. Such mixtures may be prepared by volumetric dilution of pure carbon monoxide with nitrogen or helium, which are free of carbon monoxide. If the volumes used in dilution are accurately known, the concentration may be calculated.

A known small volume of pure carbon monoxide is placed in an evacuated tank of known volume, and the tank is then filled with the dilutor gas. The pressures of the carbon monoxide volume and the final mixture must be known (or else known to be equal). Smaller samples may be prepared in plastic bags by injecting pure carbon monoxide from a gas syringe into a stream of dilutor gas metered accurately into the bag with a flow device such as a wet test meter.

Because cylinder nitrogen commonly has small amounts of carbon monoxide present in it, it must not be assumed to be pure without verification. Pure helium is reliably free of carbon monoxide. A useful procedure is to zero the detector using helium. After that, one can measure the CO content of the available cylinder nitrogen and can make the required correction. This permits using the less expensive nitrogen for most calibrations.

A reference gas mixture whose carbon monoxide content is not accurately known can also be analyzed gravimetrically or volumetrically by various methods, but these techniques are usually less convenient and often require large amounts of gas.

TABLE 8.10a
Atmospheric Carbon Monoxide Analyzers

Detection Method	*Range, ppm*	*Sensitivity, ppm*	*Advantages*	*Disadvantages*
NDIR	0–25, 50, 100	0.5–1	U.S. reference method, accurate, stable, dry gases	Sensitive, water, and CO_2 interferences (correctable), zero gas problems
Mercury vapor (hot HgO + CO releasing Hg vapor)	0–50	0.05	Sturdy, accurate, dry gases, high sensitivity	Interferences by water and other gases
Gas chromatography (reduction of CO to CH_4, flame ionization detection)	0–200	0.1	Accurate, high sensitivity, also read CH_4, dry gases	Complex and expensive

© 2003 by Béla Lipták

NONDISPERSIVE INFRARED ANALYZERS

NDIR analysis[1] is the reference method for the U.S. National Air Quality Standard for carbon monoxide and is discussed in detail in Section 8.27. It allows continuous analysis, because carbon monoxide absorbs the infrared radiation at a wavelength of 4.6 microns. Because infrared absorption is a nonlinear measurement, it is necessary for the analyzer to accurately linearize its output signal.

A schematic diagram of a typical NDIR analyzer is shown in Figure 8.10b. Infrared radiation from a hot filament is chopped to pass alternately through sample and reference cells, to be absorbed in the detector cell divided by a pressure-sensitive diaphragm. If the sample contains carbon monoxide, it will absorb part of the radiation, causing that half of the detector to exert less pressure on the diaphragm, whose distortion is converted to an electrical signal for rectification and amplification.

Sample airflow is continuous at or sometimes above atmospheric pressure. The cell is commonly 0.5 m long. The measuring range usually extends from a minimum of 0.5 to 1 ppm up to a full-scale range of 25 to 100 ppm. Response times are in the range of less than 1 to 5 min. Although the NDIR response is nonlinear, it is assumed to be linear over the limited calibration range in use. Some instruments correct for nonlinearity in the output amplifier. These analyzers can be operated by nontechnical personnel.

Interferences

Carbon dioxide and water vapor in the sample interfere with the measurement. Filter cells filled with these gases, or optical filters when placed in front of the cells, can minimize effects of normal atmospheric levels of these interfering gases. The control of water vapor interference by its removal with desiccants (e.g., silica gel) or by a refrigerator condenser is preferable in many cases, even at the cost of some increase in response time.

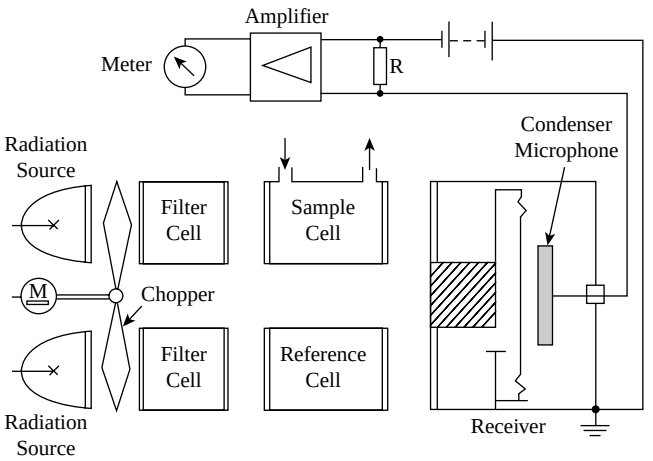

FIG. 8.10b
NDIR carbon monoxide analyzer.

Gas Filter Correlation

When very accurate low-level measurements are needed, or when background gases that have the potential to interfere with the measurement are present, gas filter correlation (GFC) is used (Figure 8.10c). In these designs the measuring and reference filters are replaced by gas-filled cuvettes. The reference cuvette is filled with CO and the measuring cuvette usually with nitrogen.

In addition to being unaffected by the presence of background gases, both the accuracy and the response time of these instruments are better than those using filters. If DFC is used in combination with single-beam, dual-wavelength technology, it is virtually immune to obstruction of the optics. This in turn prevents drift and thereby reduces the frequency at which recalibration is needed.

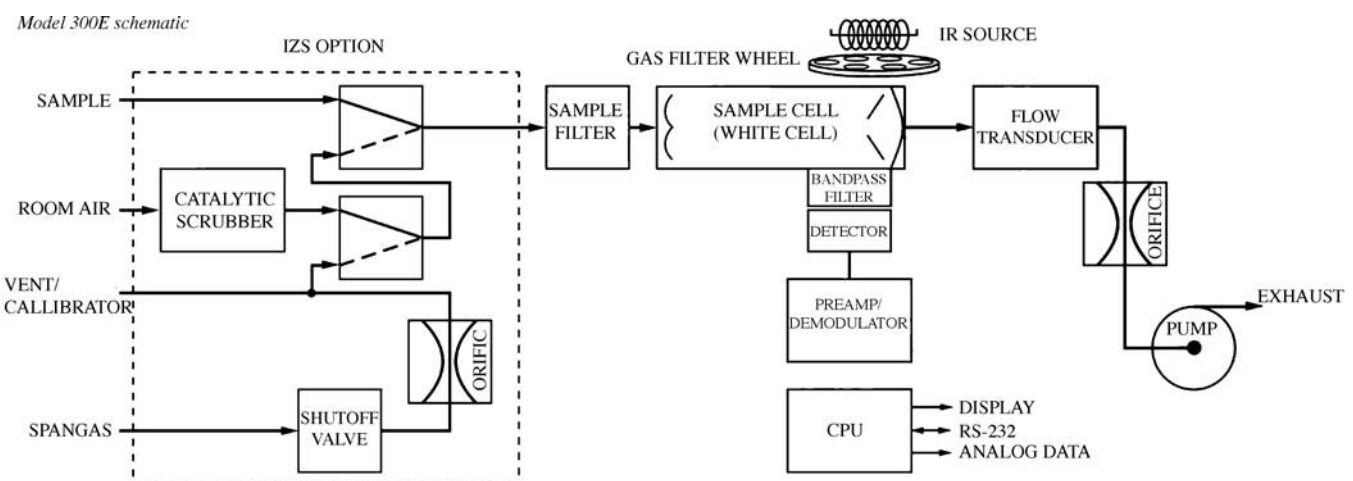

FIG. 8.10c
GFC-type carbon monoxide analyzer. (Courtesy of Teledyne Technologies Co.)

© 2003 by Béla Lipták

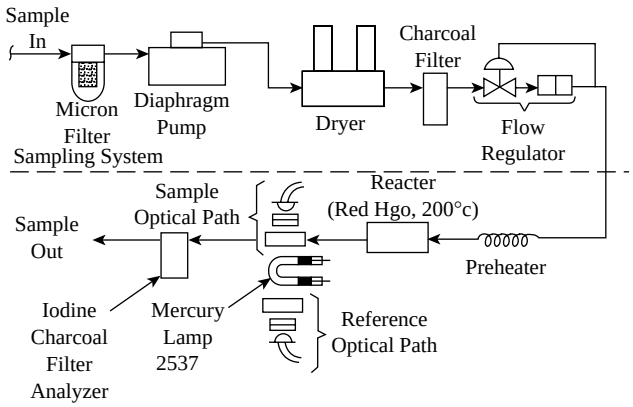

FIG. 8.10d
Mercury vapor carbon monoxide analyzer.

MERCURY VAPOR ANALYZER

Carbon monoxide is oxidized by hot mercuric oxide[2] as follows:

$$CO + HgO(s) \overset{(210°)}{\rightarrow} CO_2 + Hg(g) \qquad \textbf{8.10(1)}$$

The mercury vapor released may be measured photometrically. An analyzer based on this principle (Figure 8.10d) can be operated continuously. It has higher sensitivity than does the NDIR type, but it also suffers from some interference. Detection levels go down to 0.025 ppm, and changes of a tenth of that can be observed. Oxygenated hydrocarbons, olefins, and hydrogen interfere with the measurement, but all are normally at much lower concentrations in air than carbon monoxide. Water also interferes and should be removed by a dryer. This instrument has found particular use in nonurban measurements where carbon monoxide levels are low.

GAS CHROMATOGRAPH

Gas chromatographs are discussed in detail in Section 8.12. Figure 8.10e illustrates an automated gas chromatograph[3] that is the heart of a high-precision and specificity system measuring methane and carbon monoxide (Figure 8.10e).

A precolumn prevents carbon dioxide, water, and hydrocarbons other than methane from reaching the molecular sieve separation column. After separation, a catalytic nickel reactor converts carbon monoxide to methane, which is detected by flame ionization. The system permits determination of both methane and carbon monoxide about once every 5 min. The output is linear for both components and can be read from 0.1 to 200 ppm. The instrument is relatively complex and expensive, however, and requires technically trained operators.

ELECTROCHEMICAL ANALYZER

A galvanic cell for continuous carbon monoxide analysis[1] is based on the reaction of carbon monoxide with iodine pentoxide:

$$5\,CO + I_2O_5 \overset{(150°C)}{\rightarrow} 5\,CO_2 + I_2 \qquad \textbf{8.10(2)}$$

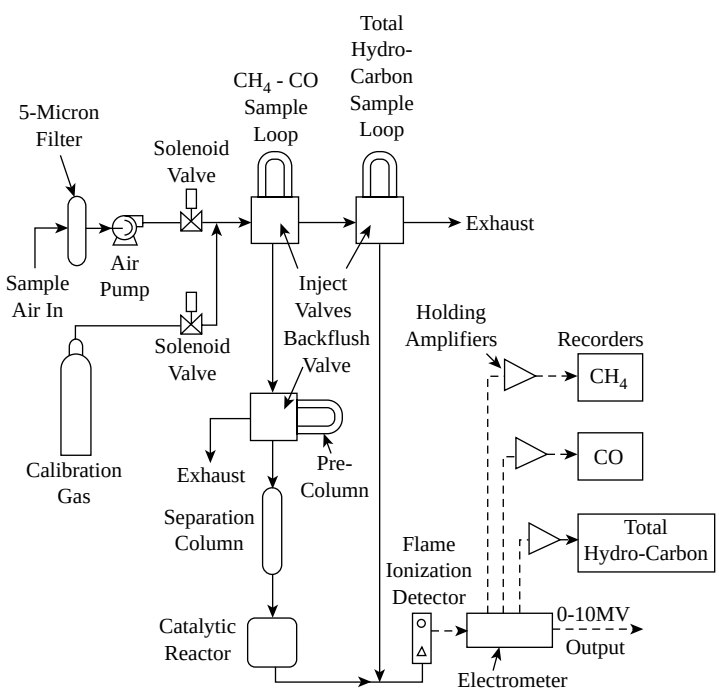

FIG. 8.10e
Methane and carbon monoxide analyzer.

© 2003 by Béla Lipták

The iodine liberated is absorbed by an electrolyte and reaches the cathode of a galvanic cell where it is reduced. The resulting current is measured by a galvanometer. Interference by mercaptan, hydrogen sulfide, hydrogen, olefins, and acetylene may be minimized by sampling through an absorption tube of mercuric sulfate on silica gel. Water vapor interference can be eliminated by the use of a drying column.

The same reaction is used in a coulometric method with a modified Hersch-type cell. The iodine is passed into the cell, and the current flow is measured by an electrometer. The interference possibilities are the same as those for the galvanic analyzer.

The minimum detectable concentration is 1 ppm with good precision if flow rates and temperature are controlled. Careful column preparation is required, and the response time is relatively slow.

Portable Monitors

For purposes of personal protection, battery-operated portable units are available. These units are usually provided with one or two alarm set points and with memory for some thousands of data points, together with their times and dates. Table 8.10f lists the ranges, resolutions, and alarm set points for a number of toxic gases, including carbon monoxide.

These pocket-size, battery-operated, portable electrochemical detectors are usually provided with digital displays and audible alarms. They can be configured for one or more monitoring channels. Figure 8.10g illustrates a unit with four individual channels of detection.

TABLE 8.10f
Typical Range, Sensitivity, and Alarm Set Points of Portable Personal Protection Monitors

Gas	*Range*	*Resolution*	*Alarm Set Points (low/high)*
O_2	0–30%	0.1%	19.5/23.5%
CO	0–500 ppm	1 ppm	35/200 ppm
H_2S	0–100 ppm	1 ppm	10/20 ppm
SO_2	0–20 ppm	1 ppm	2/10 ppm
NO	0–250 ppm	1 ppm	25/50 ppm
NO_2	0–20 ppm	0.1 ppm	1/10 ppm
NH_3	0–50 ppm	1 ppm	25/50 ppm
PH_3	0–5 ppm	0.1 ppm	1/2 ppm
Cl_2	0–10 ppm	0.1 ppm	0.5/5 ppm
HCN	0–100 ppm	1 ppm	4.7/50 ppm

Source: Abstracted from Cole-Parmer Catalog 2001/2002, Vernon Hills, IL, 2001.

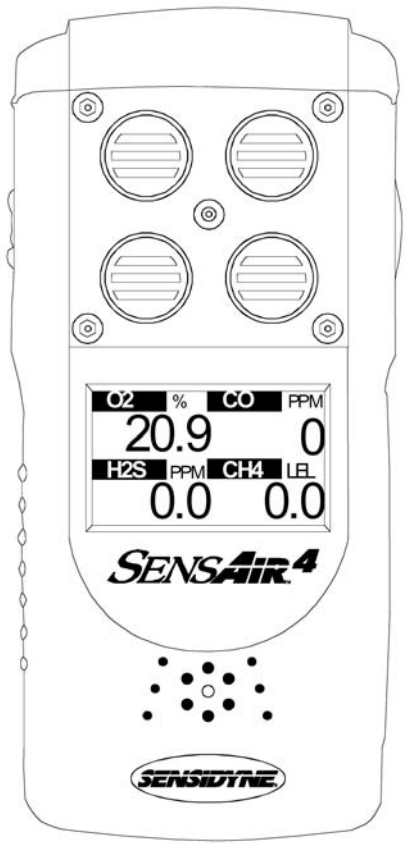

FIG. 8.10g
Typical pocket-size portable electrochemical detector configured for four individual channels of detection. (Courtesy of Sensidyne Inc.)

CATALYTIC ANALYSIS

The catalyst Hopcalite will oxidize carbon monoxide to carbon dioxide.[1] The resultant temperature rise may be recorded continuously as a measure of carbon monoxide concentration. The catalyst temperature and residence time must be controlled to avoid interference by hydrocarbons. The method is not suitable for most air monitoring applications because of low sensitivity.

SPOT SAMPLING OF AMBIENT AIR

When only intermittent analyses are required, it is convenient to collect samples in the field for later analysis in the laboratory. Rigid glass bulbs or stainless steel tanks may be evacuated and then simply opened briefly to collect the air sample. Plastic bags may be filled by means of a small air pump.

The samples may be analyzed later by various means, including use of a continuous analyzer at some other location. The samples may be analyzed in a central laboratory by an infrared spectrophotometer with a long-path gas cell or by suitable gas chromatographic apparatus.

© 2003 by Béla Lipták

Some colorimetric methods are also available for carbon monoxide analysis, although in general, their sensitivity and precision are low for atmospheric work. An NBS colorimetric indicating gel, if freshly prepared, will limit errors to 5 to 10%, with detectability down to 0.1 ppm. The technique is simple but time-consuming and tedious, with interference by oxidizing and reducing gases.

CONCLUSIONS

As discussed in more detail in Section 8.59, for simple and less accurate measurements of short-term carbon monoxide levels, gel tubes can be used. For continuous and higher precision measurements, nondispersive infrared analysis is the most common.

If it is necessary to also measure methane, the combination gas chromatograph with carbon monoxide analyzer is worthy of consideration, but this is an expensive choice. The mercury vapor analyzer is suitable where the carbon monoxide levels are low.

References

1. "Air Quality Criteria for Carbon Monoxide," U.S. Department of Health, Education, and Welfare, National Air Pollution Control Administration Publication AP-62, chap. 5.
2. Robbins, R. C., Borg, K. M., and Robinson, E., *Journal of the Air Pollution Control Association*, Vol. 18, pp. 106–110.
3. Stevens, R. K., O' Keefe, A. E., and Ortman, G. C., "A Gas Chromatographic Approach to the Semicontinuous Monitoring of Carbon Monoxide and Methane," 156th National Meeting of the American Chemical Society, Atlantic City, NJ.

Bibliography

ACGIH, *Air Sampling Instruments for Evaluation of Atmospheric Contaminants*, 9th ed., Cincinnati, OH: American Conference of Governmental Industrial Hygienists, 2001.

AIHA, *Workplace Environmental Exposure Level Guide Series*, Akron, OH: American Industrial Hygiene Association, 1979 to 2002 (full set of 109 individual guides on toxic chemicals).

Annual Book of ASTM Standards, West Conshohocken, PA: American Society for Testing and Materials, 2002.

ASHRAE Standard 110–1995, "Method of Testing Performance of Fume Hoods."

Bretherick, L., *Bretherick's Handbook of Reactive Chemical Hazards*, Stoneham, ME: Butterworth-Heinemann, 1999.

Bay, H. W., "Electrochemical Technique for the Measurement of Carbon Monoxide," *Analytical Chemistry*, October 1974.

Dailey, W. V., "A Novel NDIR Analyzer of NO, SO2 and CO Analysis," in *Analysis Instrumentation*, Vol. 15, ISA, 1977.

Draeger Gmbh, *Draeger Tube and CMS Handbook*, Leubeck, Germany: Draeger Gmbh, 2002.

NIOSH, *NIOSH Manual of Analytical Methods: Supplement*, 4th ed., 2 vols., Bpi Information Services, 1996.

Ewing, G., *Analytical Instrumentation Handbook*, New York: Marcel Dekker, 1990.

"Gas Detectors and Analyzers," *Measurements and Control*, October 1991.

Lodge, J. P., *Methods of Air Sampling and Analysis*, Chelsea, MI: Lewis Publishers, 1988.

Proctor, N. H. et al., *Chemical Hazards of the Workplace*, New York: John Wiley & Sons, 1996.

Swartz, N., "Carbon Monoxide Monitoring for Prevention of Fires," ISA/93 Technical Conference, Chicago, September 19–24, 1993.

© 2003 by Béla Lipták

8.11 Chlorine

G. P. WHITTLE (1974, 1982) **B. G. LIPTÁK** (1995, 2003)

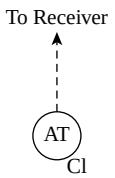

Flow Sheet Symbol

Methods of Detection:	A. Colorimetric: visual (A1), spectrophotometric (A2) B. Amperometric (B1), polarographic (B2) C. Iodometric (For a detailed discussion of wet chemistry analyzers and autotitrators, refer to Section 8.66.)
Sampling:	All three methods can be used both on grab samples and as automatic continuous analyzers.
Sample Pressure:	Generally atmospheric or near atmospheric. For continuous analyzer, water pressure is reduced to atmospheric.
Sample Temperature:	All methods are generally limited to the range of 32 to 120°F (0 to 49°C), with method B employing automatic temperature compensation within this range. Method A may or may not require precise temperature control, depending on the reagents employed.
Sample Size of Flow Rate:	In method A1, grab samples as small as 5 ml are sufficient. For method A2, flow rates of 10 to 75 ml/min are generally specified. In method B1, flow rates of 100 to 750 ml/min are required. B2 design probes are available for *in situ* installations without sampling.
Materials of Construction:	Enclosures for units are available in fiberglass, styrene, urethane-painted steel, vinyl-covered aluminum, and other corrosion-resistant construction, suitable for modular or control panel installation. Wetted parts are constructed of polyvinyl chloride (PVC), Teflon, Lucite, polyethylene, or glass. In method B, gold or platinum measuring and copper reference electrodes generally are employed.
Readout:	All designs have indicating meters or transmitted output signals for remote display, recording, and control. High–low alarm actuation or chlorinator controls are also available.
Specificity:	Methods A and B determine either free or total residual chlorine; method C measures total residual chlorine.
Interferences:	For method A, interfering substances may include other oxidants, e.g., manganese, nitrite, and chlorine dioxide, as well as turbidity and color. In method B, nitrogen trichloride and chlorine dioxide may interfere with free chlorine determinations.
Inaccuracy:	Generally ±2 to 5% of full scale for ranges up to 20 ppm
Ranges:	For method A, available ranges include 0 to 1 ppm free chlorine, and 0 to 3 ppm, 0 to 5 ppm, and 0 to 10 ppm total chlorine. For method B, 0 to 0.1, 0 to 1, 0 to 2, 0 to 5, 0 to 10, and 0 to 20 ppm or higher are available. The three-electrode units can measure chlorine residuals from the parts per billion (ppb) range to as high as 60 mg/l. For method C, the measurement range is from 0.001 to 10 mg/l.
Response to Chlorine Concentration Change:	Three minutes or more for method A2, generally less than 10 sec for method B (continuous analyzer)

© 2003 by Béla Lipták

Cost: Visual test kits are available from $25 to $100. A portable amperometric titrator costs about $1800. A free chlorine electrode in acrylic flow cell and with residual chlorine controller is about $2000. A corrosion-resistant amperometric transmitter system with probe cleaner costs about $8000, with the yearly cost of chemicals and maintenance amounting to $3000 or more. The purchase cost of polarographic transmitters is similar, but the cost of chemicals is much less. Chlorine in gas samples can be detected by UV analysis or by gas chromatography; both are discussed in later sections in this chapter.

Partial List of Suppliers:
Applied Analytics Inc. (www.a-a-inc.com)
Capital Controls Co. (www.capitalcontrols.com)
Emerson Process Management, Rosemount Analytical (www.raihome.com)
Foxboro-Invensys (www.foxboro.com)
G.C. Industries Inc.; Hack (www.erwater.com)
Hanna Instruments Inc. (www.hannainst.com)
Honeywell Industry Solutions (www.iac.honeywell.com)
Ionics Inc. (www.ionics.com)
Kaiser Optical Systems Inc. (www.kosi.com)
K-Patents Inc. (www.Kpatents.com)
Kuntze Instruments Inc. (www.kuntze-instr.com)
Omega (www.omega.com)
Prostar Technologies Inc. (www.prostar-tech.com)
Rosemount Analytical Inc. (www.processanalytic.com)
Teledyne Analytical Instruments (www.teledyne-ai.com)
Thermo Orion/Orion Research Inc. (www.iscpubs.com)
Tytronics & Nametre (www.tytronics.com)
Uniloc/Delta; Sierra Monitor Corp. (www.sierramonitor.com)
Wallace & Tiernan Stranco (www.wanat.com)

INTRODUCTION

The concentration of chlorine is of interest in both liquid and gas samples. The discussion in this section concentrates on the measurement of total or free residual chlorine in water, which can be measured by colorimetric, amperometric, polarographic, or iodometric analyzers. The measurement of chlorine concentration in gas samples is not discussed here, except to note that ultraviolet (UV) analyzers (Section 8.61) and chromatographs (Section 8.12) with thermal conductivity or flame ionization detectors are most often used to make this measurement.

Chlorine gas-leak detector alarms are also available. These units pull a sample of an airstream through an electrochemical cell, which produces a current. This current is proportional to the chlorine concentration in the air sample. These units are capable of detecting concentrations as low as 0.5 ppm by volume.

RESIDUAL CHLORINE ANALYZERS

Chlorine does not exist as Cl_2 in water. Therefore, the amount of free available chlorine is defined as the amount of chlorine that exists in the form of HOCl. Total available chlorine, on the other hand, is defined as the chlorine that exists in any of the following forms: HOCl, NH_2Cl, NCl_3, or $NHCl_3$. The combined available (residual) chlorine is obtained as the difference between total and free chlorine.

Standard laboratory methods for determining aqueous chlorine concentrations involve iodometry, in which free iodine liberated from potassium iodide is titrated with sodium thiosulfate, using starch as an indicator. All active forms of chlorine will liberate free iodine, and therefore, the iodometric methods of analysis are limited to the determination of total active chlorine. For an automatic total residual chlorine analyzer with a 4-20 mADC logarithmic output, refer to Figure 8.11a.

Other titrimetric procedures employing indicators other than starch have also been developed for the determination and differentiation of the active chlorine forms. The amperometric titration method is based on polarographic principles and allows determination of the various forms of active chlorine.

Various colorimetric procedures are available in which a colorless indicator is oxidized to a colored product, the color intensity of which is proportional to the chlorine concentration. Many of the colorimetric procedures allow the determination of the various forms of chlorine. Colorimetric procedures are adaptable to field determination by the use of kits containing the necessary reagents, color standards for visual estimation, and portable, battery-operated colorimeters. The amperometric titration and colorimetric methods have also been adapted to automated continuous analyzers.

© 2003 by Béla Lipták



FIG. 8.11a
Iodometric total residual chlorine analyzer with a range of 0.001 to 10 mg/l and a 4- to 20-mADC logarithmic output. (Courtesy of Thermo Orion/Orion Research Inc.)

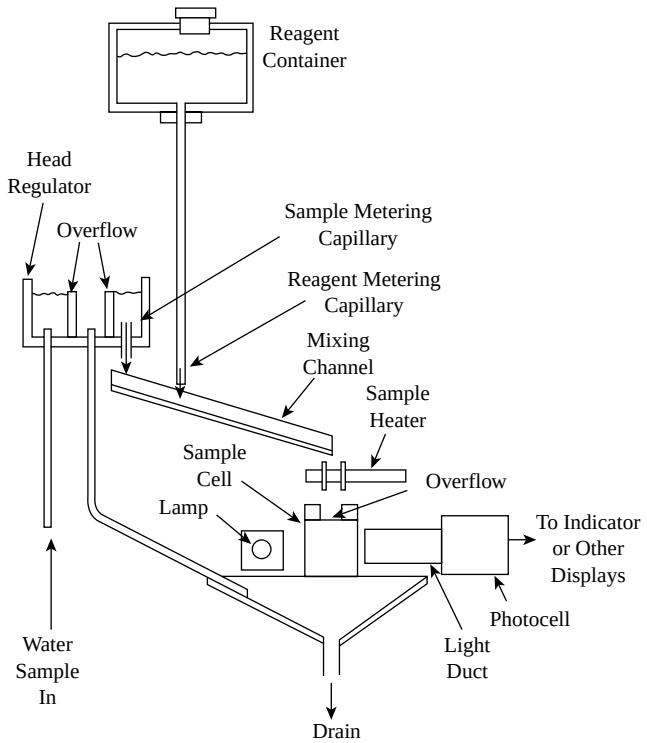

FIG. 8.11b
Chlorine colorimetric analyzer.

COLORIMETRIC ANALYZERS

In the Environmental Protection Agency (EPA) recommended DPD 330.5 method of chlorine analysis, a chemical reaction causes the intensity of the color of magenta to change in proportion to the concentration of chlorine. In the automatic analyzer, the color intensity of the sample is measured twice: once before reagents are added, for automatic zeroing and to compensate for any turbidity or natural color in the sample; and again after addition of the reagents and stirring of the sample. The second measured wavelength, around 510 nm, is compared with the reference. The chlorine concentration is calculated on the basis of the difference between the two readings.

Figure 8.11b illustrates the basic components of a chlorine colorimetric analyzer. The water sample is introduced into a head regulator where the sample flow rate is regulated by an overflow arrangement and a capillary delivery tube. The sample is passed into a channel and is mixed with the colorimetric reagent metered through another capillary tube from a storage container. The treated sample flows over a sample heater, if required, and into the sample cell, which fills and overflows at a predetermined frequency.

If chlorine is present in the water, a characteristic color develops with an intensity in proportion to the amount of chlorine present. A filtered photocell develops an output signal, which is in proportion to the reduction in intensity of the transmitted light through the sample. Periodic standardization of the analyzer is required and is done by adjustment of the indicator to read 0 ppm chlorine on an untreated water sample and to read on the extreme upper end of the scale when the photocell is completely shielded.

Automatic Colorimetric Analyzer Features

Automatic free or total chlorine analyzers can control in the on–off mode by stopping and starting a feed pump and sounding alarms, or can provide throttling control by modulating the pumping rate of the chlorine feed pump. The output signals can be to computers or printers through an RS232 interface, or can be analog selected from among the choices of 0 to 10 mV, 0 to 100 mV, 0 to 1 V, and 4 to 20 mA. The measurement range is usually 0 to 5 mg/l with a 0.01 resolution, but other ranges from 0–1 to 0–10 mg/l are also available.

These analyzers can perform an analysis every 2.5 min and use about 500 ml of reagents and color indicators per month. Therefore, monthly refilling is necessary. The flow cell should be cleaned at the same time the reagents are refilled. Although requiring about a monthly 1 h of maintenance, these

© 2003 by Béla Lipták

are relatively inexpensive and stable analyzers that are insensitive to sample pH variations or other interferences.

AMPEROMETRIC ANALYZERS

In amperometric analyzers, the composition of the electrodes is so selective that the polarization of the measuring electrode prevents a current flow when no strong oxidizing agent is present in the sample. On the other hand, when a strong oxidizing agent such as chlorine is present, the electrodes are depolarized and a current flow is generated.

This current is proportional to the amount of chlorine residual in the sample. Because pH affects the dissociation constants, the water samples are usually conditioned with a buffer solution. Similarly, because of sensitivity to temperature variations, temperature compensation is provided.

Types of Amperometric Analyzers

Amperometric analyzers are used in three basic forms: as titrators, as free residual chlorine analyzers, and as total residual chlorine analyzers. The amperometric titrator determines the end point of a 200-ml sample in a manually filled sample jar by using a portable, battery-operated instrument.

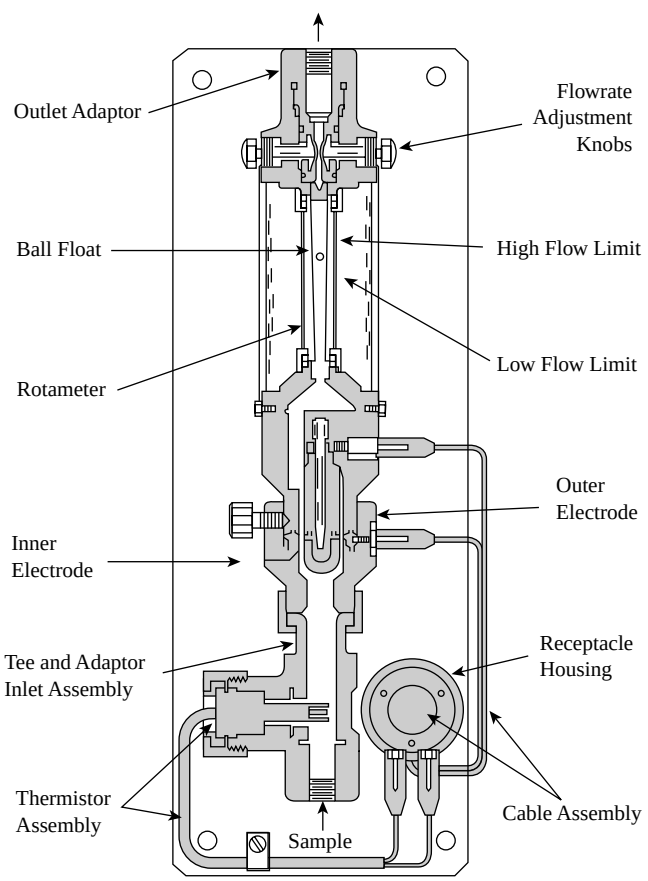

FIG. 8.11c
Measurement cell of a free residual chlorine analyzer.

During titration for free residual chlorine, a buffer solution maintains the sample pH at neutrality and a titrant (phenylarsene oxide) is added until no more current is produced by the electrode cell. This is considered the end point, and the amount of titrant used is an indication of free residual clorine in the sample.

When total residual chlorine is measured, the titration process is similar, but the buffer is at a pH of 4 and potassium iodide is also added to the sample.

Free Residual Chlorine Analysis

For free residual chlorine analysis, the sample pH is held between 5 and 9. Simple flow-through units are available that do not require the use of buffers or reagents (Figure 8.11c). These analyzers are temperature compensated and operate in a range of 0 to 2 ppm of free chlorine, with an inaccuracy of about 0.1 ppm.

Figure 8.11d shows the components of a typical amperometric analyzer, which does require buffers or reagents. The water sample is delivered to a diaphragm-type regulator for flow rate control. If required for pH control, a metered amount of buffer solution is also pumped to the regulator and is mixed with the sample prior to its reaching the cell block.

In the cell block, contact is made between the electrodes and the sample, and a direct current is generated in proportion to the chlorine in the sample. The cell block usually contains

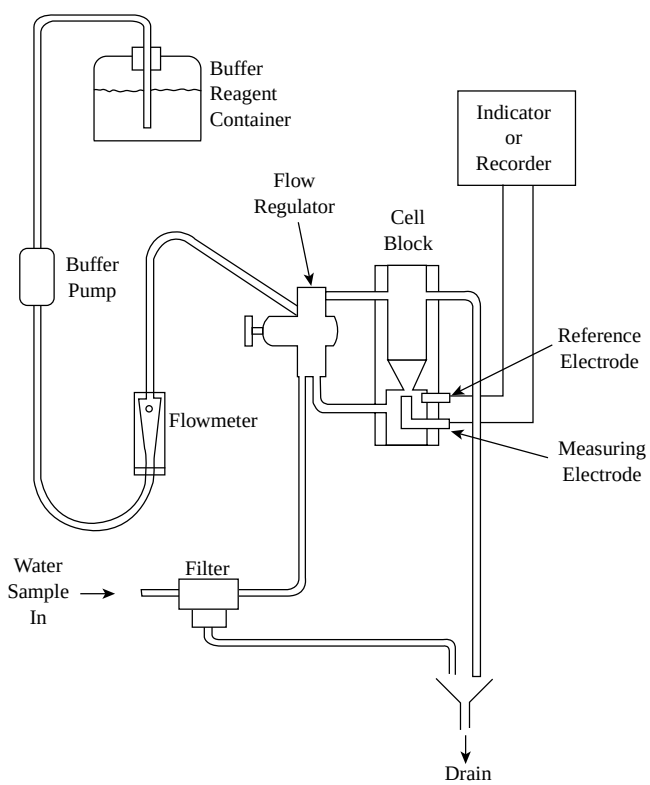

FIG. 8.11d
Chlorine amperometric analyzer.

© 2003 by Béla Lipták

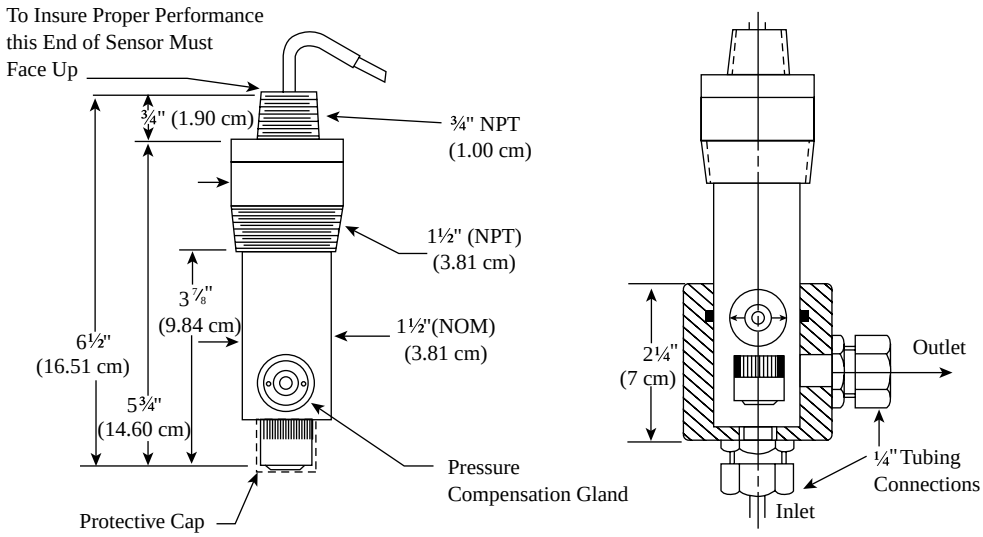

FIG. 8.11e

Amperometric chlorine probe for in-line or sample bypass-type installation. (Courtesy of Rosemount Analytical Inc.)

grit, which cleans the electrodes by means of sample velocity agitation. Periodic calibration is required through a separate determination of chlorine and is usually performed on a laboratory amperometric titrator using a standardized phenylarsine oxide solution.

Membrane Probes

Microprocessor-based chlorine analyzers are available with built-in diagnostics and simulator features. They can automatically detect chlorine and temperature and can also be equipped with a pH detector probe.

The amperometric probe consists of a gas-permeable membrane, a gold cathode, and a silver anode (Figure 8.11e). The probe is filled with a salt electrolyte. As chlorine penetrates the membrane, it is reduced at the gold cathode, which causes a current to flow that is proportional to the chlorine concentration in the water.

The main advantages of the immersion probe designs include the elimination of the sampling system and the elimination of the continuous need for chemical reagents and buffers. The elimination of sample pumps and other sampling system components not only lowers costs and maintenance, but also reduces transportation lag, which makes the installation better suited for closed-loop operation.

The elimination of the need for the continuous feed of chemicals reduces the yearly operating cost by thousands of dollars. The maintenance that is still needed is usually limited to replacing the membrane and refilling the probe with fresh electrolyte once every 2 months.

The membrane probe is shown in Figures 8.11e and 8.11f. It can be provided with an *in situ* nutating sensor or with paddle-oscillation-type cleaner agitators to provide the required apparent sample velocity at the membrane. The probe

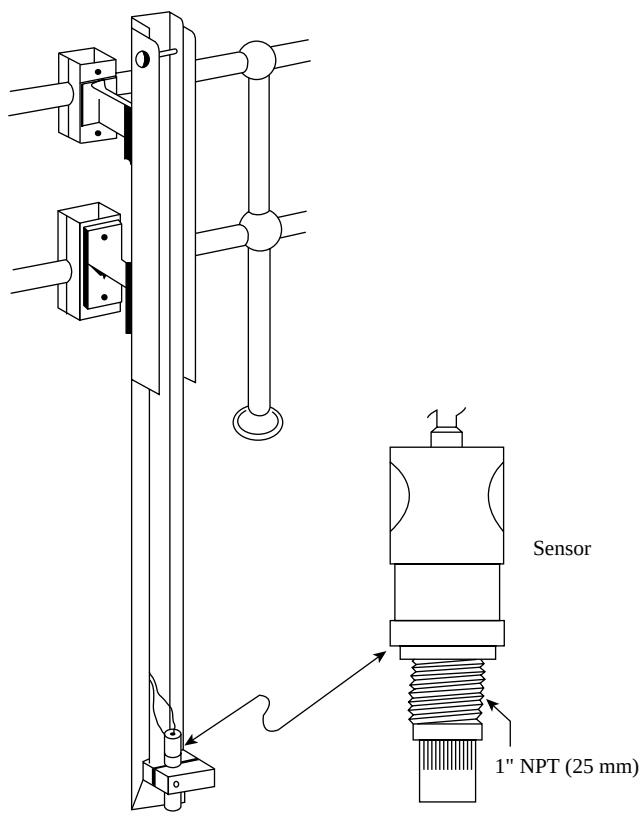

FIG. 8.11f

Immersion probe-type polarographic chlorine detector. (Courtesy of Rosemount Analytical Inc.)

can be inserted in pipes at pressures of up to 150 PSIG (10.6 bars) or can be handrail mounted (Figure 8.11f) in open tanks, with the local chlorine transmitter mounted on or above the handrail.

© 2003 by Béla Lipták

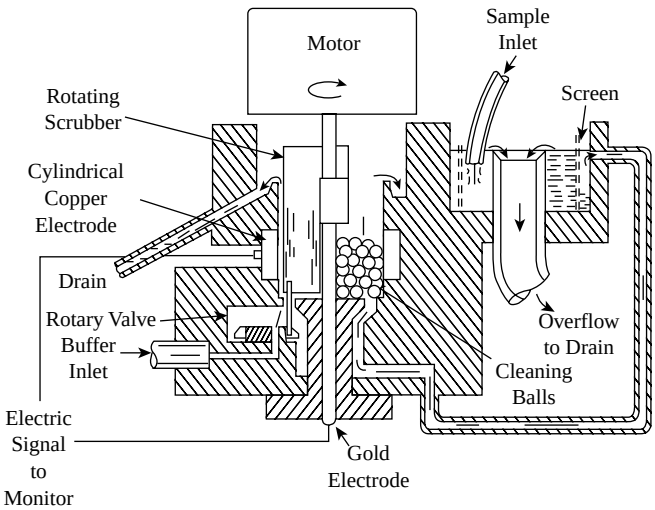

FIG. 8.11g
Electrode cleaner used in chlorine or ozone analyzers.

Buffers and Reagents

The main disadvantage of some amperometric chlorine analyzers is the need for the periodic replacement of substantial quantities of buffering and reagent chemicals.

When measuring free residual chlorine, the buffer maintains a pH of 7 and the reagent that is added to the buffer is usually potassium bromide. When measuring total residual chlorine, the butter maintains the pH at around 4 and the reagent added to the buffer is usually potassium iodide. Other chemicals that are sometimes used to adjust the pH include acetic acid and sodium hydroxide.

The cost of these chemicals can reach several thousand dollars per year, and the scheduled replenishment of these materials also adds to the maintenance cost of operating the plant.

Electrode Cleaners

Keeping the chlorine electrodes clean also requires attention. In some designs, the measuring electrode rotates at 1550 rpm to maintain ideal electrolysis conditions (relative velocity) between the sample and the electrode surface. In other designs, the space between electrodes contains plastic pellets, which are continuously agitated by the swirling water or by a rotating scrubber (Figure 8.11g).

CONCLUSIONS

Colorimetric and amperometric analyzers may be obtained with diverse accessories serving various functions, including alarm actuation and external control. Automatic temperature compensation is also available for the amperometric analyzer. The three-electrode amperometric designs do not require zero calibration and are capable of detecting chlorine residuals as low as 1 μg/l (1 ppb).

The relative merits of the continuous colorimetric and amperometric analyzers are listed in Table 8.11h.

TABLE 8.11h
Relative Merits of Colorimetric and Amperometric Analyzers

Consideration	*Colorimetric*	*Amperometric*
Type of sample	Better suited for clarified natural or treated waters than for highly turbid or colored waters and wastewaters	Turbidity and color generally not a problem; applicable to both treated water and wastewater
Interference	Intefering ions should be absent; oxidized manganese compounds produce serious interference	Copper and silver ions may interfere by plating out on electrodes
Sample temperature	Temperature control may or may not be required, depending on reagent employed	Manual or automatic temperature compensation required
Speed of response	Generally 3 min or more required to detect a change in chlorine concentration	Chlorine concentration change detected in 10 sec or less
Calibration	Analyzer precalibrated; periodic standardization requires only simple manipulations	Periodic calibration required by separate analytical technique
Reagents required	External reagent solution required	External buffer may be required for varying sample pH
Maintenance stability	Cell staining may require periodic cleaning	Electrodes may require periodic cleaning
Stability	Drift compensated for by relatively simple standardization step	Drift not a problem when electrodes are kept clean
Initial cost	Generally less expensive	Generally more expensive

© 2003 by Béla Lipták

Bibliography

Adams, V., *Water and Wastewater Examination Manual,* Boca Raton, FL: Lewis Publishers, 1990.

AIHA, *Workplace Environmental Exposure Level Guide Series, full set of 109 individual guides on toxic chemicals,* Akron OH: American Industrial Hygiene Association, 1979 to 2002.

Annual Book of ASTM Standards, Sections 11.01 and 11.02, West Conshohocken, PA: ASTM, published yearly.

Buffle, J., Ed., *In Situ Monitoring of Aquatic Systems,* New York: John Wiley & Sons, 2002.

Chlorine Residual Analyzers, Instrumentation Testing Association (http://www.instrument.org/res.htm), 1990.

Clark, K., "Chlorine Analyzers Cut Costs, Improve Performance," *InTech,* May 1998.

Dubois, R., van Vuuren, P., and Tatera, J., "New Sampling Sensor Initiative:" An Enabling Technology, 47th Annual ISA Analysis Division Symposium, Denver, CO, April 14–18, 2002.

Ewing, G., *Analytical Instrumentation Handbook,* New York: Marcel Dekker, 1990.

Grayson, M., Ed., *Kirk-Othmer Concise Encyclopedia of Chemical Technology,* 4th ed., New York: John Wiley & Sons, 1999.

Meagher, R. F. and Grinker, J. R., "Sensors for Wastewater Plant Control," *Instruments Technology,* Vol. 28, No. 5, May 1981, p. 51.

Meyers, R. A., Ed., *Encyclopedia of Analytical Chemistry: Instrumentation and Applications,* New York: John Wiley & Sons, 2000.

Mitchell, M. K. and Stapp, W. B., *Field Manual for Water Quality Monitoring,* 12th ed., LaMotte Company, Chestertown, MD, 2000.

Nassau, K., *The Physics and Chemistry of Color,* New York: John Wiley & Sons, 1983.

Riley, T. et al., *Principles of Electroanalytical Methods,* New York: John Wiley & Sons, 1987.

Shaw, A. et al., *The Use of Online Respirometric Monitoring,* WEFTEC2001 Conference, Water Environment Federation, 2001.

Sherman, R. E., *Process Analyzer Sample-Conditioning System Technology,* New York: John Wiley & Sons, 2002.

Skoog, D. A., *Principles of Instrumental Analysis,* 5th ed., Florence, KY: Brooks/Cole, 1997.

Standard Methods for the Examination of Water and Wastewater, New York: APHA, AWWA, and WPCF, latest edition.

Van den Berg, F. W. J., Hoefsloot, H. C. J., and Smilde, A. K., "Selection of Optimal Process Analyzers for Plant-Wide Monitoring," *Anal. Chem.,* 74(13), 3105–3111, 2002.

Water Quality and Treatment, The American Water Works Association, Inc., New York: McGraw-Hill, latest edition.

© 2003 by Béla Lipták

8.12 Chromatographs: Gas

RAYMOND ANNINO (1995, 2003)

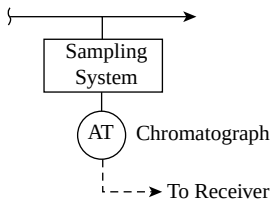

Flow Sheet Symbol

Type of Sample:	Vapor or vaporizable liquid
Sample Pressure:	0 to 100 PSIG (1 to 7 bar)
Ambient Temperature:	–4 to 122°F (–20 to 50°C); however, a sheltered environment is recommended.
Analysis Zone:	140 to 356°F (60 to 180°C) provided that the desired oven temperature is at least 18°F (10°C) above ambient (stable oven temperature ±0.1°F (±0.05°C) at steady ambient ±1°F (±0.5°C) for –4 to 122°F (–20 to 50°C) ambient change)
Contacting Material:	Stainless steel or surface-deactivated steel for trace analysis of reactive compounds, Teflon
Auxiliary Utilities:	Instrument air-dry, oil-free, available at 50 PSIG min (3.5 bar) and 2 to 3 scfm (1 to 1.5 sl/sec); carrier gas, zero air, and hydrogen for FID; possible steam tracing or electrical heating for sample lines
Cycle Time:	2 to 20 min, depending on application and packed or capillary column operation
Special Features:	Accepts other inputs (e.g., flow rate and density in the calculation of output, e.g., BTU/h); built-in diagnostics with local and remote indication; multicomponent read-out; stand-alone or networked; communication link (fieldbus or Ethernet directly to the plant or local LAN and local control system); local and remote operator interface; single- or multistream analysis
Location:	Class 1, Groups B, C, and D, Division 1 hazardous areas
Analyzer Cost:	Basic analyzer, $35,000 to $45,000 (depending on number purchased)
Installed Cost:	$45,000 to $125,000 (depending on type, number, and application)
Suppliers:	ABB Process Analytics (www.abb.com/analytical) Applied Instrument Technologies (www.orbital-ait.com) Daniel Industries (www.danielind.com) Fluid Data/Thermo Onix (www.fluid-data.com) HNU Process Analyzers (www.hnu.com) Questar Baseline Industries (www.baselineindustries.com) Rosemont/Emerson (www.processanalytic.com) Siemens Applied Automation (www.sea.siemens.com) SRA Instruments (www.sra-instruments.com) Wasson-ECE Instrumentation (www.wasson-ece.com) YEW Yokagawa (www.yokorawa.co.jp) Among these suppliers, about 65% of the market is shared by ABB and Siemens AA. About 30% of the market is shared by AIT (supplying the Foxboro 931D), Thermo Onix, Daniel Industries, Rosemont, and Yokagawa.

© 2003 by Béla Lipták

INTRODUCTION

Gas chromatography (GC) is a method for separating the components of a sample that contains a mixture of volatile compounds. The separations are made in order to determine the quantity of each of the sample components of interest. It has become one of the most often used procedures in analytical chemistry for separation and analysis. The reasons for its popularity can be traced to its ease of use for the separation of complex mixtures, its high sensitivity, and the small sample required for the analysis.

In the elution form of GC, the sample mixture to be separated is vaporized and injected into a flowing stream of carrier gas (the *mobile* phase) that carries it into a column containing a so-called *stationary* phase. The stationary phase is a high-boiling nonvolatile liquid that is suspended on an inert solid with a large surface area or coated in a thin film on the walls of a small-bore tube (capillary, or *wall-coated open tubular* (WCOT) column). The support-coated solid can be packed into a fairly large-bore column (packed column) or attached to the wall of a small-bore capillary (*support-coated open tubular* (SCOT) column). Similarly, a solid stationary phase (such as silica gel, alumina, or charcoal) can be packed into a column or suspended on the walls of a small-bore tube.

Separations occur because the sample components have different solubilities in the *liquid* stationary phase or different adsorbtivities on a *solid* stationary phase. Therefore, each sample component is retarded a different amount by the stationary phase and is carried down the column by the mobile phase at a different rate. Provided that a stationary phase has been selected that maximizes the solubility or absorbtivity differences, complete separation will occur with each sample component emerging from the column at a different time. A detector that responds to some property difference between the carrier gas and the sample components is placed at the end of the column. It yields a signal that, when recorded as a function of time, produces the familiar chromatogram such as that shown in Figure 8.12a. The observed peak separation (resolution, R) is a function of the above-mentioned solubility or adsorbtivity differences and the efficiency of the column, that is, its ability to produce narrow peaks. The efficiency (hetp) of a GC column is expressed as height equivalent to a theoretical plate (N). The smaller the hetp, the more efficient the column (that is, there are more theoretical plates per unit length of column).

The resolution of peaks 5 and 6 in Figure 8.12a at retention times of t_{R5} and t_{R6} is calculated from the chromatogram as follows:

$$R = \frac{2(t_{R6} - t_{R5})}{w_5 + w} \qquad \textbf{8.12 (1)}$$

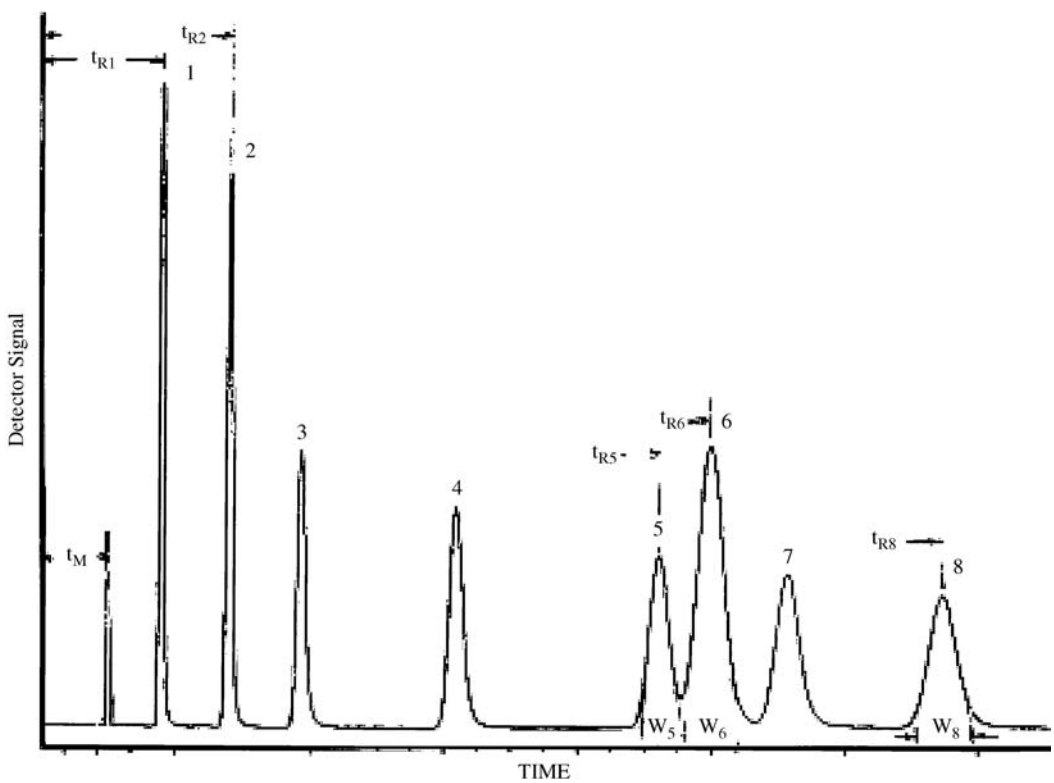

FIG. 8.12a

A typical packed column chromatogram showing fully and partially resolved peaks. Retention time of an unretained sample component (such as air) measured from the time of injection = t_M. Retention time of sample components 1 to 8 = t_{R1} to t_{R8}. The resolution of peaks 5 and 6 = 1.1. The number of theoretical plates calculated using peak 8 = 4158.

© 2003 by Béla Lipták

where w_5 and w_6 are the respective peak widths measured at the base of the peak. In this case, the resolution of the two peaks is 1.1. Two compounds of equal concentration are baseline resolved at a resolution of 1.5.

The theoretical plate as calculated from a peak (number 8 in Figure 8.12a) using Equation 8.12(2) is found to be 4158 and was obtained using a *packed column*.

$$N = 16\frac{t_{R8}^2}{w_8^2} \qquad \textbf{8.12(2)}$$

and the efficiency of a column of length, L, is

$$\text{hetp} = \frac{N}{L} \qquad \textbf{8.12(3)}$$

The time required for each component to emerge is called the *retention time*, t_R, and the magnitude of the detector signal (peak height or peak area) is related to the amount of the compound present in the injected sample. If these individual retention times and detector responses are made to remain constant (by adequate control of carrier gas flow rate, column temperature, amount of stationary phase, and detector variables), the process can be automated so that the instrument will provide this information quite precisely and cyclically on a repetitive basis.

BASIC CHROMATOGRAPHIC INSTRUMENTATION

The basic instrumentation necessary to accomplish the above-described chromatography is extremely simple (see Figure 8.12b).

It consists of a supply of carrier gas (commonly helium, hydrogen, or nitrogen) with appropriate pressure regulation, a sample introduction device (described later on) to inject a fixed volume of sample into the carrier gas stream, a column containing the stationary phase, and a detector. Since the degree of solubility of the sample components in the stationary phase is temperature dependent (and thus so will be the retention times), a precisely regulated temperature environment must be provided for the column. In some cases, to minimize the analysis time for samples that contain a wide boiling range of compounds, the temperature of the oven is varied linearly with time. This procedure is called *temperature-programmed chromatography.*

Although they employ the same principles, the process gas chromatograph (PGC) is quite a different instrument than its laboratory counterpart. These differences appear as the result of a number of factors, not the least of which include:

- The need for continuous, reliable operation of the unit
- The need for the cycle time of the analysis to be shorter than the time required for the process control system to achieve proper control action
- The nature of the environment in which the PGC is placed
- The diverse user attitudes regarding maintenance, and their capability regarding the operation of the unit
- The necessity to interface with modern-day computer-controlled systems

Thus, a premium is placed on simple, reliable design to ensure a low mean failure rate, but straightforward, rapid repair when required, and the strategic placement of appropriate sensors to aid in diagnosing problems and to provide alarms with regard to the operation of the unit.

To summarize, the PGC has the following distinguishing attributes:

- Located in the plant as close as possible to the sample point to minimize sample transport time
- Dedicated to monitor one or more components in one or more process streams
- Designed for continuous, unattended operation
- Designed for operation in hazardous environments
- Designed to withstand exposure to weather, humidity, dust, and corrosive atmospheres
- Contains integral hardware and software to allow communication with the process control system as well as remote maintenance stations

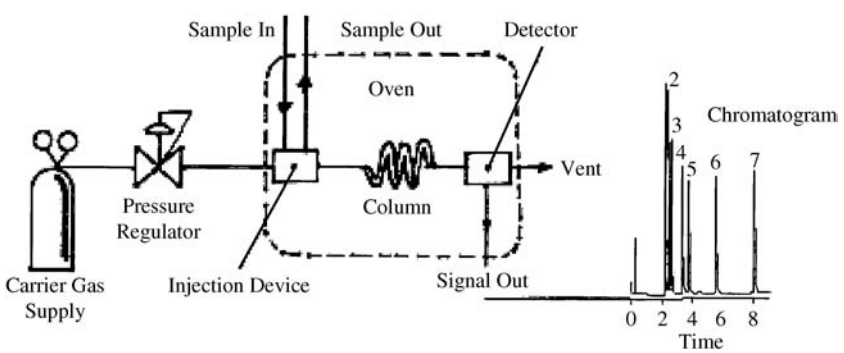

FIG. 8.12b
Basic elements of a chromatograph.

© 2003 by Béla Lipták

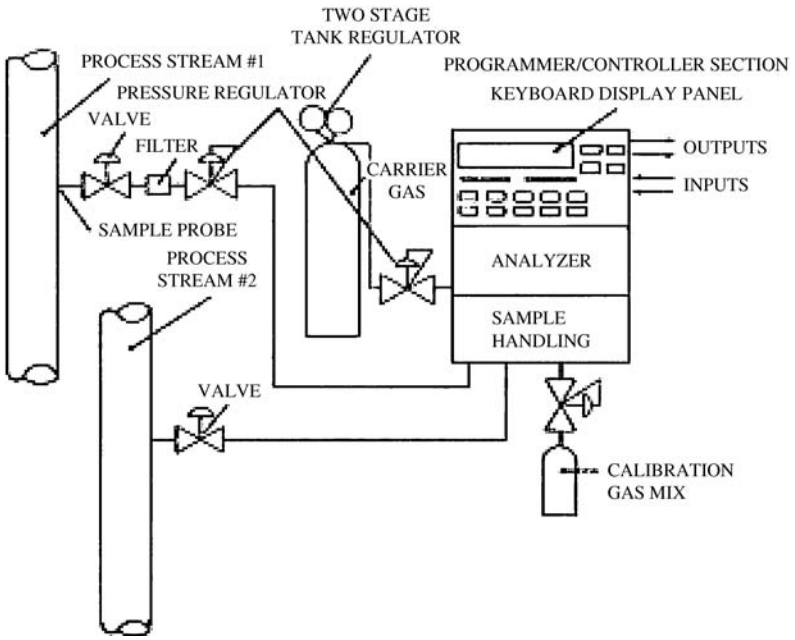

FIG. 8.12c
Basic elements of a multistream process gas chromatographic system.

- Contains alarms and diagnostic aids to continuously monitor the health of the instrument and aid in diagnosing problems

A process gas chromatographic system (as shown in Figure 8.12c) consists of both the PGC and a sample handling system (SHS). They will be discussed separately in the following sections.

COMPONENTS OF A PROCESS GAS CHROMATOGRAPH

The architecture of a PGC can be broken into two principal parts: the *analyzer*, containing the hardware that makes up the basic chromatograph; and the *programmable controller*, containing the electronics for the control and operation of the chromatograph plus a communication package. What follows is a detailed discussion of these various parts and specifications of the PGC.

The traditionally designed unit, such as illustrated in Figure 8.12d, is fairly large (typically 40" × 26" × 18" in. HWD) and is mounted in a protected analyzer enclosure. An alternative so-called transmitter design, focused on a narrow market such as natural gas analysis in custody transfer applications,[1] has been available for some time. However, the development of a full-featured transmitter to compete with the more traditional design in a variety of applications has a checkered history. A totally pneumatic PGC transmitter[2] was introduced in the mid-1970s and was on the market until 1989. More recently, a detailed transmitter design appeared in the literature[3] but was never commercialized, and in the

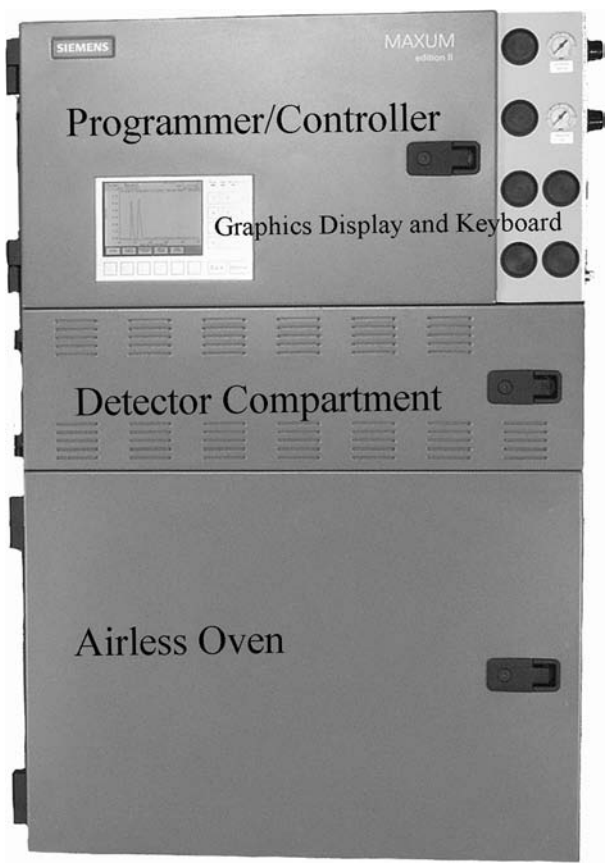

FIG. 8.12d
Typical PGC for mounting in an analyzer shelter. This unit can be obtained as shown with a single large oven or, with this space divided to provide two separate ovens each with its own thermostat. (Photo courtesy of Siemens Applied Automation.)

© 2003 by Béla Lipták

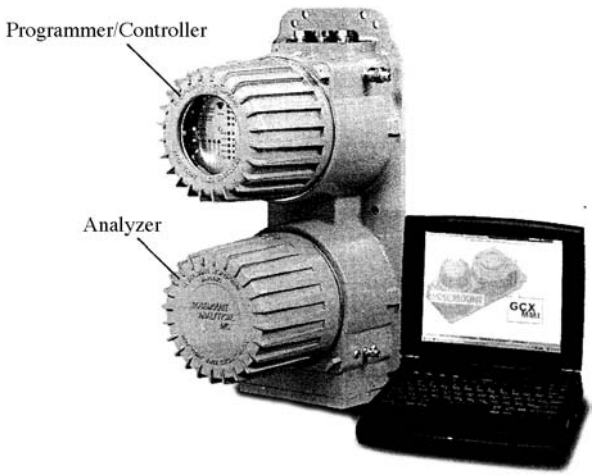

FIG. 8.12e
A "transmitter" designed PGC; Dimensions 28" × 12" × 15" HWD. The analyzer and programmer/controller are mounted separately in their own explosion proof enclosure (similar to the old dP cell hats). The ubiquitous notebook PC is shown as the remote analyzer maintenance station. (Courtesy of Rosemont Analytical Inc.)

mid-1990s a unit was introduced to the U.S. market (designated as the SGC 3000[4]) that has since disappeared but may be offered in Japan and Europe. Finally, in the late 1990s a transmitter design (illustrated in Figure 8.12e) was marketed that is still current and appears to be quite successful. All of the functions that will be discussed in the following text also pertain to this latter design.

The advantages of the transmitter are that it can be mounted close to the sample point (thereby decreasing sample transport time and thus cycle time) and it does not require an analyzer shelter (thus decreasing installed cost). The overall size of the transmitter and its sample handling hardware is much smaller than the shelter-mounted units for ease of field mounting. In previous designs, the oven space necessary to mount the complex valve and column arrangements was sacrificed along with its ability to handle many applications. This severely limited the market for such a design and may account for its rather limited success over the years. However, the newer design appears to be much more flexible, offering parallel chromatography, complex column valving options, many detector options, and a full communication package. In addition, efforts have been made to design the units for easy maintenance. In the absence of a complex sample-handling package, however, the transmitter, with its simple modular sample handling unit close-coupled to it, is basically a single- or, at most, a dual-process stream analyzer. However, to accommodate users who wish to spread the cost of the analyzer by using it for the analysis of several streams, the transmitter equipped with an external sample-handling package can handle up to 16 streams. The only advantage left for this design then is the decreased cost due to the elimination of the analyzer shack required for the traditional PGC.

Analyzer

The analyzer section contains all of the basic elements of the chromatograph, namely, columns, sample and column-switching valves, and detectors, all enclosed in a precisely thermostated oven. In some designs, the associated pneumatic components are also placed in the oven, and in others they are not. Which option is elected depends on the quality of the components and robustness of the software to tolerate retention time changes that may occur when pressure and flow controllers experience a varying temperature environment. The oven may be designed for isothermal and temperature programming operation.

As mentioned previously, temperature programming is a procedure for decreasing the analysis time for a sample consisting of compounds of widely divergent boiling points and polarity. The temperature of the column is usually maintained at some initial value for a fixed period of time while the low boilers elute from the column, and is then raised in a linear fashion (at a suitable rate) during the remainder of the cycle so as to ensure the separation of the remaining sample components in a much shorter period of time than if the analysis had been run isothermally. The oven then must be cooled rapidly to exactly the same starting temperature and programmed at the same rate if one is to obtain reproducible retention times for the various sample constituents—clearly not a trivial design problem, especially if the unit is to be certified for use in Division 1 areas.

Oven

For economy and design simplicity, a single isothermal temperature zone is most frequently used. However, units with two separated temperature zones are now available. This provides the application engineer with tremendous flexibility, since parallel chromatography can be run on the same sample at the same or different temperatures with columns containing the same or different stationary phases. In this manner, the solution to difficult applications can be considerably simplified and the cycle time shortened.

Although isothermal oven operation is usually the choice, temperature-programmed units are offered to extend GC applications to other *volatility measurements* such as *simulated distillation*, *Reid vapor pressure*, etc.

The majority of PGCs utilize air-bath ovens for both isothermal and temperature-programmed applications. In this design, each of the analyzer elements, such as the oven heater and detectors, is built to be explosion-proof for mounting in a basically non-explosion-proof air-bath enclosure. A continuous flow of instrument air (at 3 to 4 scfm) is passed through a heater (see Figure 8.12f) and the oven, and then vented inside or outside the analyzer shelter. The temperature of the oven is usually in the range of 50 to 225°C (±0.1°C), but may be limited by the area safety classification regarding the permitted surface temperature (the T rating). The T rating may also limit heat-up rates.

© 2003 by Béla Lipták

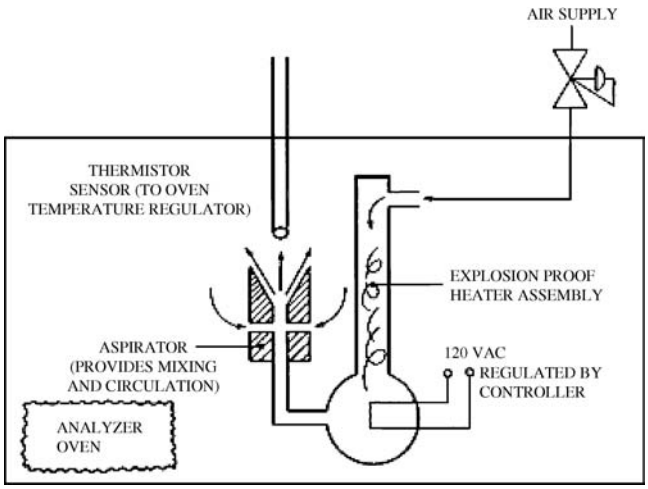

FIG. 8.12f
Basic elements of an explosion-proof isothermal air bath oven heater assembly.

Also available for the analyzer shelter-mounted units is an airless heat-sink oven of about the same size as the air-bath units. The heating elements in this oven are not exposed, but cast into the oven walls, providing conductive and convective heat transfer with heat-up rates not much slower for the same oven volume than that of the air-bath variety. Also, higher temperatures can be achieved with this design within a given area T rating than with the air-bath oven. The advantages of such a design are that operational costs are decreased because:

- It does not require instrument air for its operation.
- Power consumption is less than half that of the air-bath unit since only conductive heat loss must be compensated, while with the air-bath design, new ambient air must be heated continuously.

In addition, with this design the explosion-proof detectors can be mounted outside the oven (similar to laboratory GC design), providing much more working space within the oven (see Figure 8.12g).

The second and oldest design that has evolved through the years is achieved by placing all the elements of the analyzer in an explosion-proof enclosure. This design also does not require purge air for the oven. Historically, this has lead to a very heavy and unwieldy package, but now, using the smaller, modern engineered analyzer and electronic components, compact units such as the PGC transmitter are available. Field maintenance of the analyzer portion of these instruments consists of replacement of the total oven–GC assembly (see Figure 8.12h for details of the transmitter construction). Similarly, as with modern traditional design, the electronics package has been modularized to allow quick replacement of electronic components.

Valves

Valves are used for the injection of sample and as column switches in the various column configurations that may be required in the application. The most popular of these are the

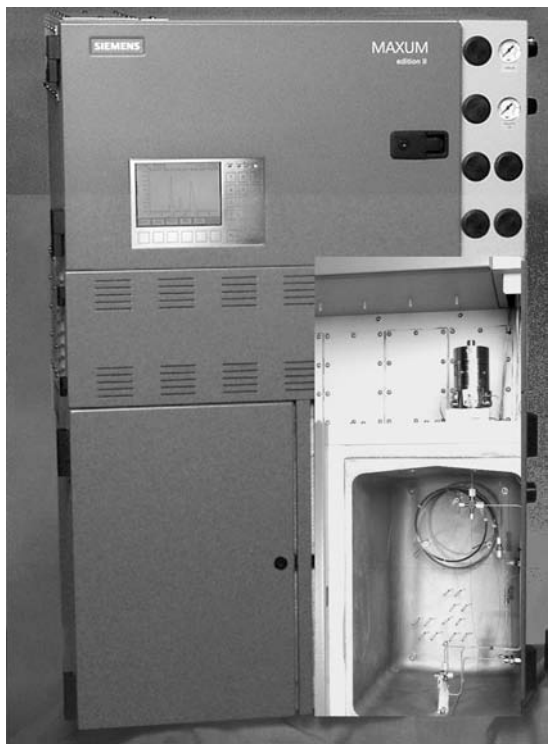

FIG. 8.12g
One half of a dual airless oven assembly showing the placement of the explosion-proof detector outside of the oven. Space for the explosion-proof heater assembly is not required in an airless oven and an application using "valveless" column switching has further reduced the oven space needed for the application. (Photo courtesy of Siemens Applied Automation.)

rotary, sliding plate, diaphragm mechanical, and no-moving-part valves, and the so-called *valveless* or *Deans switch*.[5]

The sample valve is designed to deliver a fixed volume of sample to the head of the column. For very small samples (less than a microliter), the sample volume is defined internally by a slot machined into the movable member of the valve (sliding plate or rotor), and for larger volumes, by an external loop made from a length of deactivated tubing attached to the valve.

In the past, the smaller volumes were used to inject a liquid volume of sample (which was rapidly vaporized in the carrier gas). However, with the increasing popularity of capillary columns (which require much smaller samples than their packed column analogs), these valves are being used for the injection of gaseous samples. In any case, because liquid samples pose particular problems with regard to sample valve reliability, sample handling, and safety, liquid sample injection is best avoided by vaporizing the sample before presenting it to the sample valve.

Rotary Valve The most popular rotary valve (especially for capillary chromatography) contains a conical rotor with machined grooves interconnecting the outer ports that are drilled into the outer body. Two positions of the rotor define different flow paths, as shown in Figure 8.12i.

© 2003 by Béla Lipták

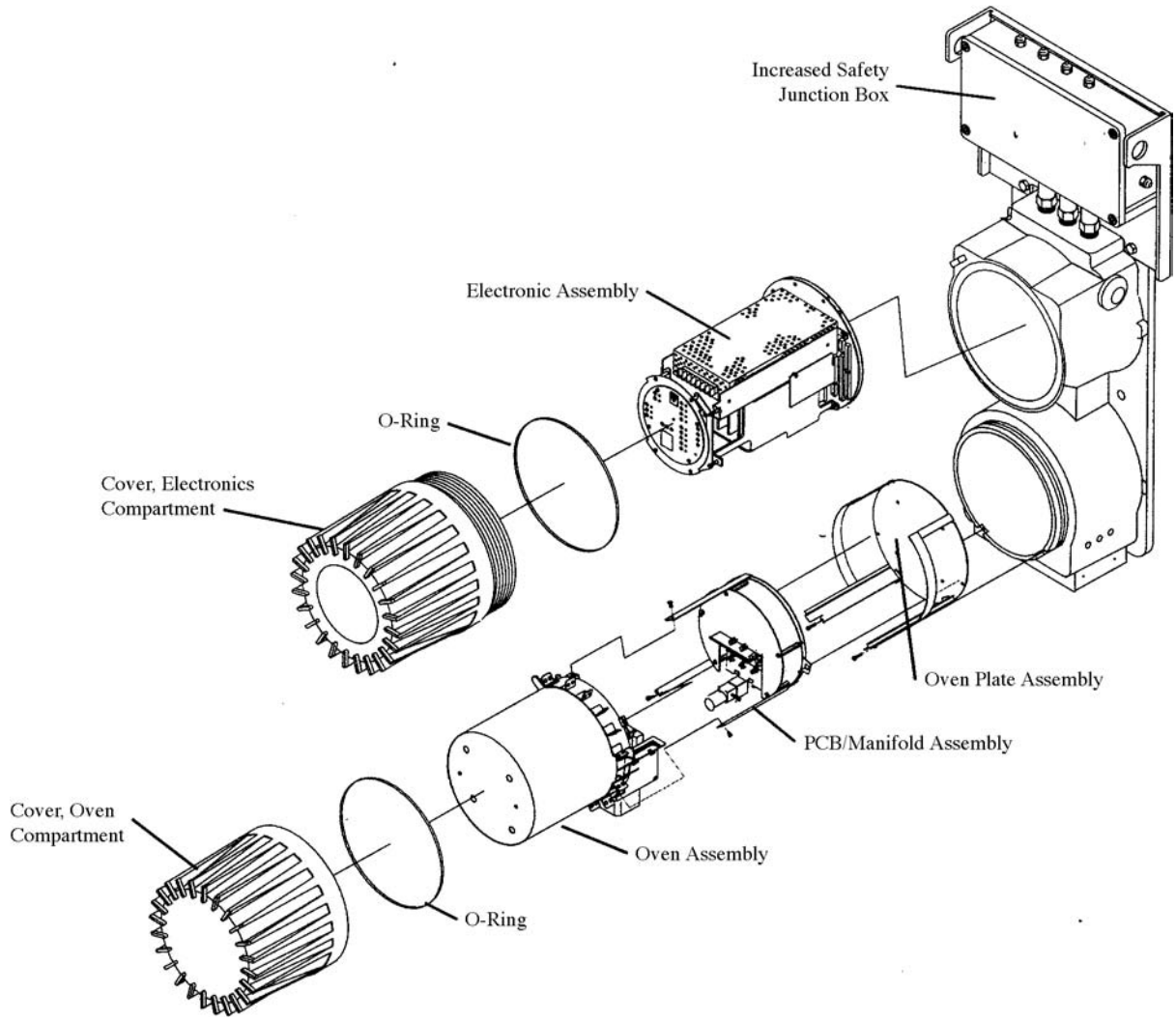

FIG. 8.12h
An exploded view of the "transmitter" illustrates the modular construction of the unit. Rapid field maintenance of the analyzer is met by replacement of the total oven assembly which includes columns, detectors, valves, actuators, heaters, temperature sensors, and electronic pressure/flow controller components. In the electronics section, the printed circuit board assemblies are "euro-card" slide rail mounted and may be removed/replaced without the use of tools. (Courtesy of Rosemont Analytical Inc.)

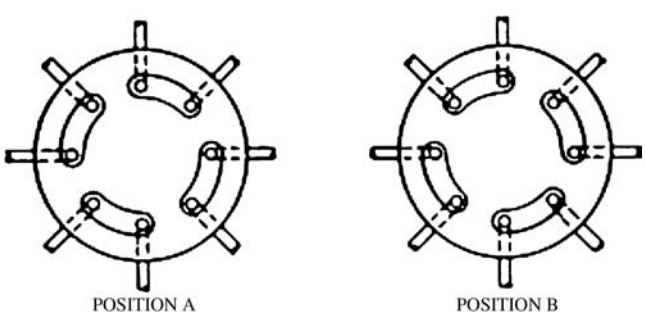

FIG. 8.12i
Ratary valve.

The rotor faces are of filled Teflon or similar polymer that provides chemical resistance as well as sealing and lubricity. The valve body is made of stainless steel, or other corrosion-resistant alloy, with highly polished conical faces to form a mating seal with the rotor. The rotor is held against the stator by a factory-calibrated threaded cap that applies the correct force. An exploded view of a manually operated version of such a valve is shown in Figure 8.12j.

The PGC version of this valve is actuated either by a compressed air operator or by an electrically driven solenoid. Although these valves meet the stringent demands for capillary chromatography, there are disadvantages in that they require regular maintenance, since the rotors wear and must be replaced after about 200,000 cycles. In addition, they require a much more complicated driver since the simple linear motion commonly available must be converted to a rotary one.

Sliding Plate The sliding plate valve comes in both linear and rotary versions, the former being the most popular by virtue of the simple operator required for lateral rather than rotary movement of the slider.

© 2003 by Béla Lipták

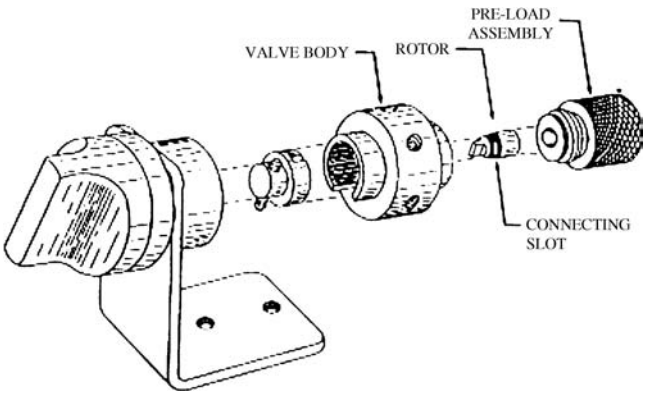

FIG. 8.12j
Exploded view of a manually actuated rotary valve. (Courtesy of Valco Instrument Co. Inc.)

In a manner similar to that of the rotary valve, the switching is done by a plate with channels machined in its face that is switched over holes that are drilled into the valve body. Again, the slide is made of filled Teflon or similar polymer, for the reasons outlined above. The slider is moved between its two positions either by a diaphragm operator mechanically linked to it (with compressed air, released by an external solenoid, supplying the necessary force) or directly with a solenoid whose shaft is linked to it.

Diaphragm The diaphragm valve comes in 10-, 6-, and 4-port versions and operates on a different principle than the sliding plate or rotary valves. The flow of gases between adjacent ports arranged in a circular pattern in a machined and polished metal surface is controlled by a Teflon diaphragm. Two versions of the diaphragm valve are available. In one, the force is applied to the diaphragm by a series of plungers that are in turn moved by two pneumatically actuated pistons. This is illustrated in Figure 8.12k for a six-port sample valve. The other version uses pressure-on-diaphragm activation with no moving parts. Both versions are highly reliable (1-million-cycle rating for the piston-operated one, and 16 million for the no-moving-part variety).

Although the sample valve example shown in Figure 8.12k utilizes an external sample loop, these valves are also available with small internal-volume loops.

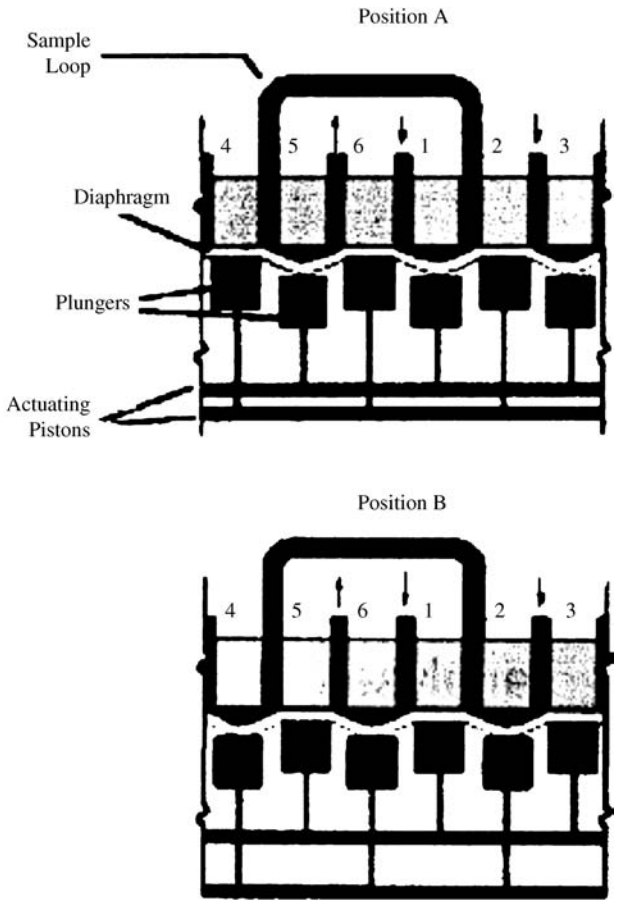

FIG. 8.12k
Schematic view of a six-port diaphragm sample inject valve. Carrier gas enters at port 3 and exits at port 4. Sample in/out ports are 1 and 6. In Position A, the sample loop is being filled with sample. In Position B, sample is swept from the loop by carrier gas. (Courtesy of Valco Instrument Co. Inc.)

Columns

Packed columns are still the most commonly used in most PGC applications. However, open tubular (OT) capillary column solutions are making inroads in many cases. WCOT columns are often preferred because they are more efficient than packed columns, and thus it is possible to simplify the column configuration necessary to achieve the desired separations. In addition, they often allow for faster analysis cycles. There is a downside, however, to using capillary columns in PGC applications in that many of the older designed PGCs will not adequately support them. Also, because of the ease of plugging the small-diameter columns and connecting plumbing, sample handling to produce extremely clean samples is of paramount importance. Very small sample volumes must be injected to maintain the efficiency of the WCOT columns. Thus, special sample valves and additional hardware to split the sample delivered from the sample valve are necessary. Also, detectors designed with small internal volumes are necessary, as well as critical attention to plumbing details, to avoid unswept volumes that degrade chromatographic peaks by creating long tails on the trailing edges. In addition, in some cases, the small sample volumes may lead to inadequate detectability by some detectors.

Packed Columns Packed columns in 1/8-in.-outer diameter (o.d.) (0.079-in., 2-mm-inner diameter (i.d.)) stainless steel tubing are in widest use, although the smaller-diameter 1/16-in.-o.d. (0.039-in., 1-mm-i.d.) micropacked (smaller-diameter particles) are increasingly being used. Occasionally, the larger 3/16-in.-o.d. columns are used in special application. The length of these columns will vary with the difficulty

© 2003 by Béla Lipták

TABLE 8.12l
Popular Stationary Phases

Stationary Phase	*Comments*
OV-101™ (100% methyl silicone) useful from 0 to 330°C	Most frequently used GC phase. Low polarity, separates homologous series of compounds according to their boiling points.
OV-17™ (50% phenyl–50% methyl silicone) useful from 50–250°C	Moderately polar silicone phase.
OV-25™ (75% phenyl–25% methyl silicone)	Highly polar silicone phase. Selective for aromatics over aliphatic hydrocarbons.
OV-225™ (25% cyanopropyl–25% phenyl–50% methyl silicone useful from 0–250°C	Increased polarity over OV-25. Increased retention of aromatics over aliphatics, alcohols over ethers, ketones over primary alcohols.
Carbowax 20M (polyethylene glycol, mol. wt 15,000–20,000) useful from 60–225°C	Generally useful polar phase.

in making the separations. Longer columns produce more plates and thus have more separating power. However, the maximum column length is ultimately determined by the pneumatic equipment. Large pressure drops are avoided by keeping column lengths to less than 12 ft. The stationary phase is coated on support particles (sieved to 80 to 100 or 100 to 120 mesh) of Chromosorb™ (a diatomaceous earth product that has the large surface area needed to make efficient columns). Some popular stationary phases and the separations for which they are used are listed in Table 8.12l.

Additionally, it has been suggested in the literature that most separations can be accomplished by using mixtures of a polar and nonpolar phase in the proper proportions.[6,7] Indeed, computer-aided series-connected capillary column design procedures have been published that produce column systems optimized for the analysis restraints (such as analysis time and detectability) that are operative for that particular application.[8]

Active solid supports such as alumina, activated charcoals, and silica gels have been used in the past for the separation of fixed gases and light hydrocarbons. However, their use is now avoided if possible because their activity is difficult to stabilize, leading to changes in retention time and separating power. Similarly, molecular sieves (synthetic alkali metal aluminosilicates) once used primarily for the separation of hydrogen, oxygen, nitrogen, methane, and carbon monoxide must be protected from carbon dioxide (by using a trapping column ahead of it) and from other hydrocarbon gases that are adsorbed and deactivate the column. Many of the applications that once used these solid phases can now be performed with synthetic porous polymer phases such as Porapaks™ and HaySep™.

WCOT (Capillary) Columns In the past, capillary columns were avoided because of their fragility (they were made of glass since metal capillaries had active surfaces that produced less efficient columns due to tailing peaks) and also the stationary phase tended to bleed off over a period of time. However, these problems are no longer present because of two technological breakthroughs. The fragility problem has been solved by coating the outside of the fused silica capillary with a polyamide (similar to the coating used for optical fibers), which turns it into a tough, bendable capillary tube.[9] In addition, the stationary phase stability problem has been eliminated by performing the appropriate chemistry on the stationary phase after it is coated on the walls of the capillary tubing to produce partial cross-linking of the phase to itself and to the silica surface.[10,11] Columns of this type are classified as having *stabilized stationary phases* and are readily available from all GC column vendors.

Although capillaries of 0.25-mm i.d. are commonly used in laboratory GCs, it is much more common to see the so-called megabores (0.32- to 0.50-mm i.d.) used in PGC applications as a direct replacement to the packed column. Minimum hardware modifications are necessary on older PGCs to accommodate these larger capillary columns. They provide comparable or better efficiency than their packed column analogs and, in many cases, better separations, since longer columns can be used (because of their high permeability).

The characteristics of the various columns used in process GC are summarized in Table 8.12m.

COLUMN AND VALVE CONFIGURATIONS

One of the most severe restraints operative in PGC applications is that of timely analysis cycle time. Since the cycle time includes the sample transport time as well as analysis time, this restraint has implications from both a chromatographic and a sample handling point of view. The latter concern will be discussed later on in this text. The solution to analysis time has historically been to use multiple columns in various configurations. Multiple columns and column-switching systems serve several important functions, namely:

- Housekeeping: To ensure that all components are removed from the columns during each analysis cycle. The method commonly used to achieve this objective is called backflushing.
- Discard unmeasured components: In many process control applications, a rapid analysis of only one or two components is required, not the total analysis. Both backflushing and heart-cutting are used.
- Simplify the separation problem: A single column that will separate all of the measured sample components within the desired cycle time may be difficult to find. However, it may be possible to optimize separate columns for different portions of the analysis and then combine them in such a fashion to achieve the

© 2003 by Béla Lipták

TABLE 8.12m
Characteristics of Columns Used in PGCs

Type mls/min	*Length, m*	*o.d. mm*	*i.d. mm*	*Flow*
Packed				
Conventional	0.1–5	3.18 (1/8")	2	10–50
Micropacked	0.02–1	1.59 (1/16")	1	1–10
Capillary	1–100	0.4–0.8 (1/64–1/32)	0.1–0.5	0.5–10

Type	*Advantages*	*Disadvantages*
Conventional	Ease of fabrication	Large carrier gas consumption
	Large Sample capacity affords	Modest efficiency
	High detectability	
	Relatively inexpensive	
Micropacked	Lower gas consumption	Higher head pressure reqd.
	Higher effiency	Lower sample capacity
	Faster analysis	Difficult to fabricate
Capillary	Lower gas consumption	Lowest sample capacity
	Higher effiency	Reduced detectability
	Fast analysis	Expensive
	Best separating power	

desired analysis. This simplifies the application problem. Trap-and-store methods, as well as parallel and series columns, are frequently used for this purpose.

While the solutions to some applications may have changed with the advent of more instrumentation that can support capillary, temperature-programmed, and parallel chromatography, many remain that can only be solved with the use of the various column configurations discussed below. While there are literally hundreds of possible column configurations, they are all built from a few basic ones.

Hardware

Six- and 10-port valves are often used in multicolumn chromatography. However, an alternative switching procedure, the so-called valveless or Deans[5] switching, is used extensively in process GC, particularly in Europe. Basically, this valve depends on applying a pressure differential to change the flow pattern of carrier gas. The columns are connected in series by a T, the center connection of which is connected to a second source of carrier gas through a solenoid located outside the heated oven. The solenoid controls the supply of carrier gas to the tee to shift the flow pattern (see Figure 8.12n). The main hardware advantages of this arrangement are that solenoids that satisfy the lower temperature specification are much easier to find; it is a less expensive solution to the problem, since a solenoid and a tee are less expensive than a high-temperature rated chromatographic grade-switching valve; and, finally, the assembly takes up much less oven space than a conventional rotary or diaphragm valve.

Sample Injection The primary function of the sample inject valve is to place a sharply defined fixed volume of sample into the carrier gas stream so that it can be carried into the column for separation into its individual components. The sample volume is defined by an external length of tubing connecting two of the valve ports, as shown in Figure 8.12k,

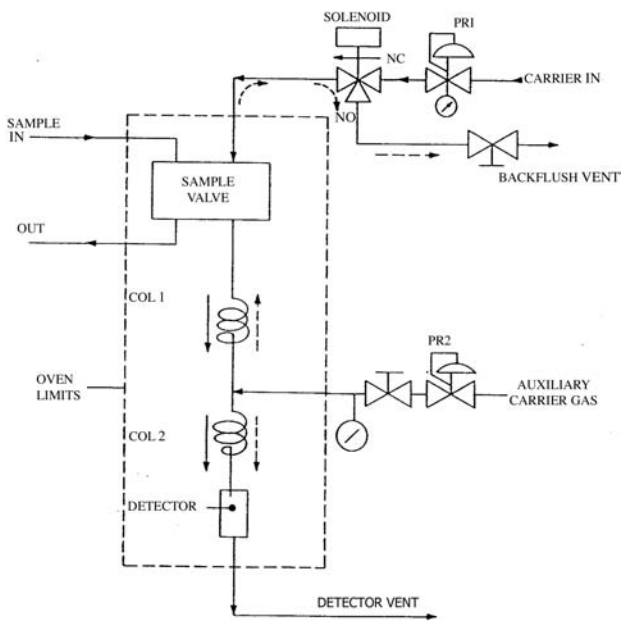

FIG. 8.12n
Backflush to vent configuration using a Deans switch. Column 1 is backflushed to vent in the "fail-safe" unenergized position of the solenoid. The auxilary regulator, PR2, supplies carrier gas to both columns in its backflush mode. Except for the sample valve, there are no moving parts within the heated analyzer oven. (From Annino, R. and Villalobos, R., Process Gas Chromatography: Fundamentals and Applications, Research Triangle Park, NC: ISA, copyright 1992 ISA. Used with permission. All rights reserved.)

© 2003 by Béla Lipták

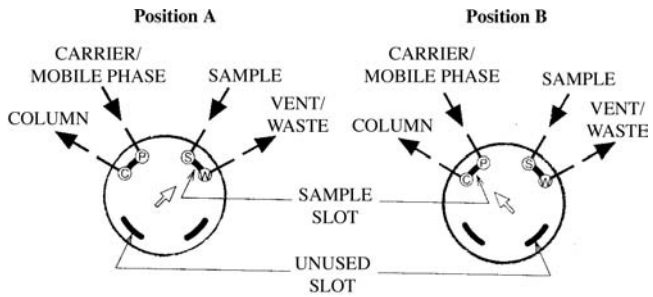

FIG. 8.12o
Rotary valve with internal sample loop for the injection of small volume liquid or vaporized sample.

or internally by a groove machined into one of the valve faces (see Figure 8.12o for an internal sample loop in a rotary valve). The latter configuration is used for small-volume gaseous or liquid injections.

In the case of some liquid samples, a special valve is used that is designed to have two distinct temperature zones: 1) a cool zone near ambient through which the sample circulates, and 2) an internally heated vaporizing zone where the liquid sample is injected into the carrier gas stream, vaporized, and carried into the column. This type of sample valve is called a vaporizing liquid sample valve. An important feature of this design is that the circulating liquid sample does not contact the heated zone. Hence, it can be used for samples that will not tolerate heat, for example:

- Samples that tend to polymerize (such as styrene)
- Samples with a high vapor pressure such that heating them to the temperature of the column would increase their vapor pressure above the line pressure and result in partial vaporization (flashing) of the sample.

The internally heated vaporizing valve is also used if local or company safety codes prohibit the introduction of flammable liquids into the heated analyzer zone.

Capillary columns require much smaller injection volumes than do packed columns. For gas samples, the appropriate volumes (0.5 to 10 ml) can be obtained using the external or internal sample loop. Acceptable liquid sample volumes for capillary chromatography, however, are a thousand times smaller than this and are obtained by adding a splitter between the sample inject valve and the column. The splitter is essentially a Y specially designed so as not to produce any discrimination of the vaporized sample according to some function of composition; that is, it provides only a volume split of the sample. Since one leg of the Y may be operating at 200 to 500 times the column flow rate, it potentially constitutes an increased operating cost for the instrument. For this reason, it is normally dead-ended, except when injecting sample.

Backflush The column configuration most frequently used in process GC is the backflush precut to vent. Both this and the sample inject operation are shown combined in the 10-port valve configuration shown in Figure 8.12p, using a rotary valve, and in Figure 8.12n, using a Deans switch. The backflush procedure performs the all-important housekeeping function of removing all unmeasured heavy components or those that may degrade the analytical column (such as water) from the column system each cycle. The system consists of at least two columns: a precut (or stripper) column, C1, and an analysis column, C2. The precut column is backflushed shortly after the sample is injected, thus allowing only the components that are to be measured to enter the analytical column.

Typically, the precut column is approximately one third the length of the analytical column. This allows sufficient time for all components to backflush during the time necessary to chromatograph the rest of the sample on the analytical column.

Another version of backflush, called backflush to detector, is illustrated in Figure 8.12q. It is used when it is desired to have a measure of the "heavies" that are backflushed.

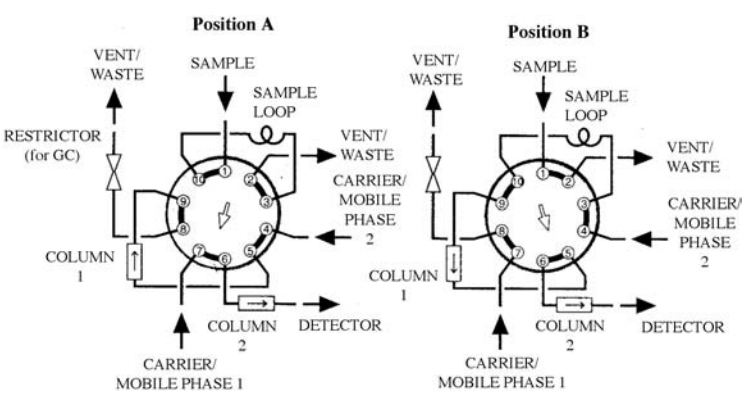

FIG. 8.12p
A 10-port rotary valve with an external sample loop configured in Position B for the injection of sample into column 1 and column 2 and, in Position A, for backflush to vent of the sample components trapped on column 1 while the rest of the sample is separated on column 2 and the sample loop is refilled with fresh sample. (Courtesy of Valco Instrument Co. Inc.)

© 2003 by Béla Lipták

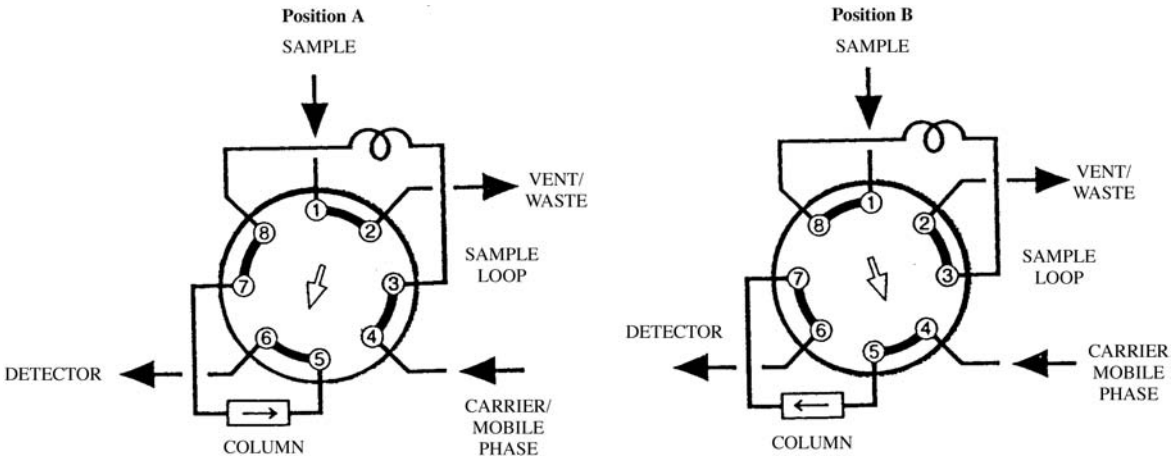

FIG. 8.12q

Backflush to measure configuration: an 8-port rotary valve is configured so that the backflushed components can be flushed through the detector and measured as a group. (Courtesy of Valco Instrument Co. Inc.)

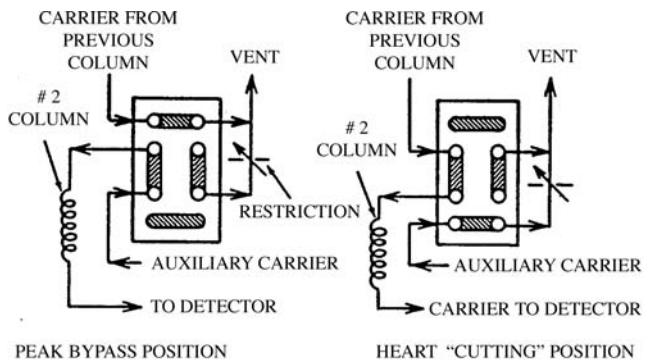

FIG. 8.12r

Heart-cut configuration: a six-port plate valve is configured so as to divert a large portion of a major component in order to simplify the separation of a small concentration of a sample component riding on its tail.

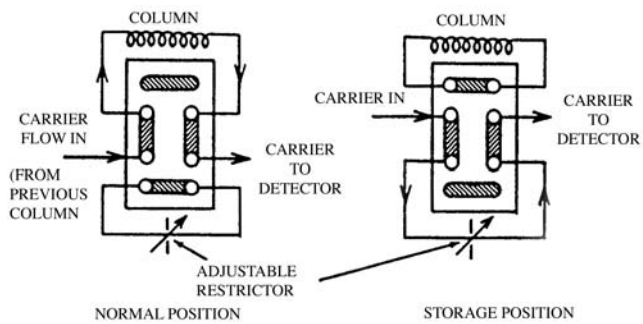

FIG. 8.12s

A six-port plate valve configured so that a group of early eluting sample components pass into a storage column which is then isolated from carrier gas flow (the group of components remain stationary on the column except for a samll amount of longitudinal diffusion) and stored until the rest of the sample is separated and measured by the detector. When the valve is again switched, the components on the storage column are developed and measured by the detector.

Heart-cutting Heart-cutting is one of the most useful column configurations. It is frequently used for the analysis of trace components that elute immediately after a large concentration of another sample component that interferes with its determination (for example, trace amounts of acetylene in ethylene). The design consists of two columns, a heart-cut column and an analysis column, as shown in Figure 8.12r, using a six-port sliding-plate valve. In the normal position of the heart-cut valve, the effluent of the heart-cut column is diverted to vent. When the component of interest is about to elute, the heart-cut valve diverts it into the analysis column and then returns to its venting position. A heart-cut of only the compound of interest and a narrow band or "tail" from the major component are thus introduced into the analysis column. This operation may be repeated for each component of interest, although it is usually not practical to measure more than three heart-cut components per analysis.

The trap-and-store configuration consists of two analytical columns arranged in series through a column-switching valve, as shown in Figure 8.12s. The switching valve is used to direct the effluent from column 1 into column 2 or through a bypass restrictor to the detector for measurement. In a manner similar to that used in heart-cutting, two or more components that are not separated on column 1 are diverted to column 2, as shown in Figure 8.12s, *normal position*. In the other *storage position* of the valve, carrier gas is not available for this leg. Column 2 is thus isolated, and the diverted compounds are stored while the rest of the sample is developed in column 1 and passed on through the restrictor to the detector for measurement. The trapped compounds are then passed to the detector for measurement.

DETECTORS

Of the many detectors that have been proposed for use in PGC over the years, two emerge as the most popular and have been applied to a far-ranging number of applications. They are the

© 2003 by Béla Lipták

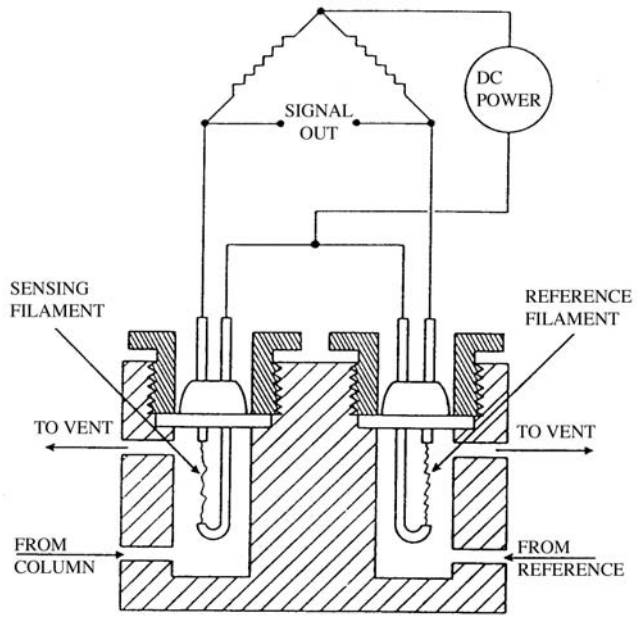

FIG. 8.12t

Single sensing filament, single reference filament, flow-through TCD with replaceable elements shown in a classical Wheatstone bridge circuit. In a properly designed TCD block assembly, the inclusion of reference filaments imparts greater stability to the signal by balancing out small temperature variations in the cell block.

thermal conductivity detector (TCD) and the flame ionization detector (FID). Their popularity stems from their basic simplicity and ruggedness coupled with their acceptable sensitivity for most applications. There are other detectors used in PGC applications (such as the flame photometric and other ionization detector), but only under special circumstances.

Thermal Conductivity Detector

The TCD is a concentration-responsive detector of moderate sensitivity (MDQ = 10^{-9} g) and dynamic range (10^5).* It is a reliable, simple, easy-to-maintain, and relatively inexpensive detector with a universal response. The unit shown in Figure 8.12t is of classical design and consists of a cavity in a metal block with a filament (made of a metal with a large resistance/temperature coefficient such as tungsten or an alloy such as tungsten-rhenium) suspended in the carrier gas flow stream. In support of capillary chromatography, the newer detector designs strive to minimize detector cavity volume. The filament is heated electrically and reaches some equilibrium temperature (and corresponding resistance) based on the power supplied to it and the thermal conductance of the gas passing over it, and the temperature of the cavity wall. The cavity wall temperature is maintained constant by the oven environment,

* MDQ is the minimum amount of solute that will produce a detector signal twice the peak-to-peak noise of the detector. The dynamic range of the detector is the range of concentration of the test solute over which a change in concentration results in a measurable change in detector signal.

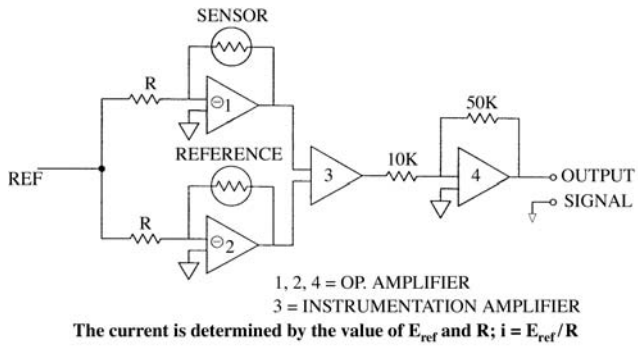

FIG. 8.12u

Simple constant current circuit for a thermistor bead TCD with a gain of 5. (From Annino, R. and Villalobos, R., Process Gas Chromatography: Fundamentals and Applications, Research Triangle Park, NC: ISA, copyright 1992 ISA. Used with permission. All rights reserved.)

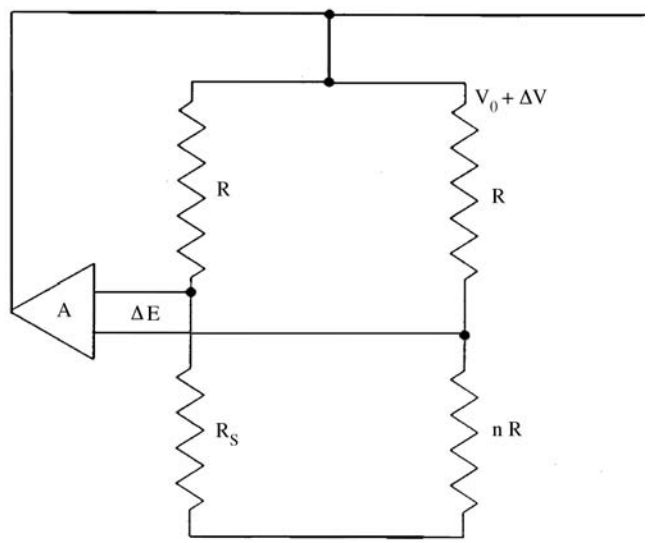

FIG. 8.12v

Basic constant resistance/temperature circuit for a TCD. (From Annino, R. and Villalobos, R., Process Gas Chromatography: Fundamentals and Applications, Research Triangle Park, NC: ISA, copyright 1992 ISA. Used with permission. All rights reserved.)

and the carrier gas is selected for its large thermal conductivity (helium or hydrogen), compared to the components of the sample. Thus, as sample components– carrier gas mixtures enter the detector, the consequent thermal conductance change experienced by the filament environment leads to a change in the equilibrium temperature and resistance of the filament.

Traditionally, the filament is made to be one arm of a Wheatstone bridge that is supplied with a constant voltage. The change in null voltage experienced by the bridge when the filament changes resistance is recorded as the chromatographic signal. Modern TCD electronics, however, favor constant-current (Figure 8.12u) or constant-resistance designs (Figure 8.12v) for faster response and also for filament protection in the presence of large sample concentrations and cessation of carrier gas flow.

© 2003 by Béla Lipták

Alternatively, the filaments can be replaced with thermistors (sintered mixtures of manganese, cobalt, and nickel oxides along with trace elements). They are mounted in the form of a bead on platinum wire leads and coated with glass to make them inert. Thermistors have a very large negative temperature coefficient, making them very sensitive sensors. However, they have a limited temperature range and their sensitivity decreases with increasing temperatures Thus, they are most useful in low-temperature applications. Also, their use is commonly restricted to helium carrier gas as the glass covering becomes embrittled and cracks when hydrogen is used.

Flame Ionization Detector

Even though the use of a FID involves increased operating cost and increased analyzer complexity, its very large dynamic range (10^7), high sensitivity (0.015 coulombs/g C), low detection limits (10^{-12} gC/sec), and vanishing small dead volume (10^{-2} μl) have made it probably one of the most popular GC detectors in use today. With optimized operating parameters, it is possible to determine as low as 20 pg, or about 5 ppb, of a sample.

The FID consists of an oxygen-rich hydrogen flame that burns organic molecules, producing ionized fragments. These ions are subjected to an electrical field produced by impressing a potential (usually 150 to 300 V) across a jet and the collecting electrode (the jet is usually made negative, and the collector positive).

The essential components of a FID are shown schematically in Figure 8.12w. The hydrogen fuel is mixed with the column effluent and then fed to the jet. An outer sheath of air supports the flame. In some designs, the flame points downward. This ensures removal of water from the flame vicinity together with any solid particles that may be present. The presence of either of these substances will contribute to the background noise of the system and thus reduce minimum detection levels. The response of the detector depends on the flow rate of all three gases—with the hydrogen flow rate being the most critical (the ratio of air to hydrogen is usually around 10).

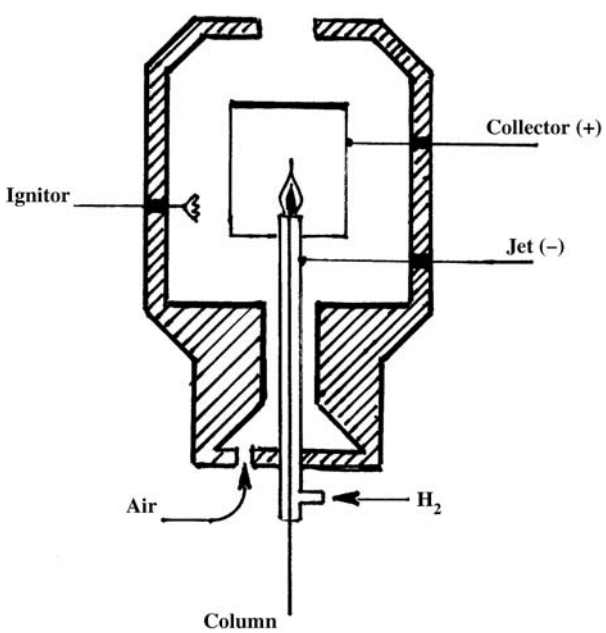

FIG. 8.12w
Schematic illustration of an FID assembly. The capillary column is run up inside the jet to the tip (thus minimizing detector dead volume). The collector is positively polarized usually with +300 volts. The flame is supported by an external sheath of air.

TABLE 8.12x
FID Effective Carbon Number (ECN)

Atom	*Type*	*ECN*
Carbon	Aliphatic	1.0
Carbon	Aromatic	1.0
Carbon	Olefin	0.95
Carbon	Acetelenic	1.30
Oxygen	Ether	–1.00
Oxygen	Primary Alcohol	–0.60

The response of the FID, which varies with the identity of the component in the flame, depends primarily on the number and type of carbon atoms being oxidized. However, the identity and manner in which other atoms are combined with the carbon also influences the response. The concept of effective carbon number (ECN) has been introduced[12] as a means of relating the various responses. The ECN is the sum of the contributions made by the individual carbon atoms modified by the functional group contributions (a sample of these ECNs is given in Table 8.12x).

A number of compounds cannot be detected by the FID. These include the fixed gases, oxides of nitrogen, H_2S, SO_2, COS, CS, CO, CO_2, H_2O, NH_3, and the noble gases. However, if the carrier gas is doped with an ionizable gas (such as methane), even these gases can be detected (yielding negative peaks as they dilute the concentration of ionizing gas during the elution). Also, in the case of carbon dioxide, monoxide, or formaldehyde, chemically reacting the gases as they emerge from the column to form methane makes them FID responsive. Thus, most suppliers of PGCs offer a *methanizer*, which is placed between the end of the column and the FID. Hydrogen is also *teed* in at this point. The methanizer consists of a length of 1/8-in.-o.d. tubing filled with a catalyst of 10% (wt/wt) nickel on Chromosorb P, over which the reducing reaction occurs. The reaction is nonselective in that all hydrocarbons are converted to methane.

The FID is a very inefficient ionizing source, and it is only its very low noise level (10^{-14} A), allowing large amplifications, that makes this detector so sensitive. As shown in Figure 8.12y, high-gain, low-noise, electrometers mounted as close to the detector as possible are required to exploit the full range of this detector. In addition, to maintain this low noise level, highly purified gases should be used.

© 2003 by Béla Lipták

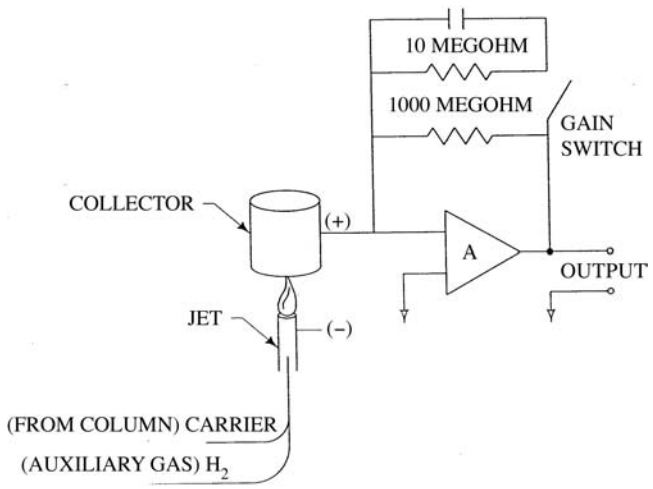

FIG. 8.12y

Schematic of a simple high impedance current amplifier circuit used for the measurement of the small currents generated by the FID. (From Annino, R. and Villalobos, R., Process Gas Chromatography: Fundamentals and Applications, Research Triangle Park, NC: ISA, copyright 1992 ISA. Used with permission. All rights reserved.)

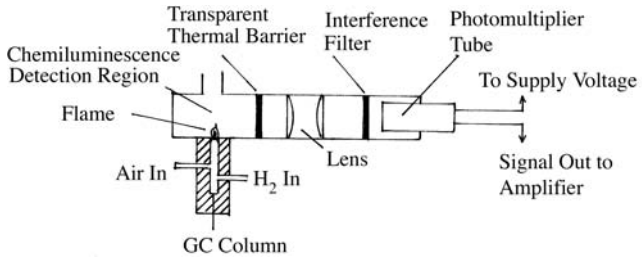

FIG. 8.12z

Basic flame photometric detector.

Flame Photometric Detector

The flame photometric detector (FPD), illustrated in Figure 8.12z, is essentially a flame emission spectrometer design optimized for use as a GC detector. It is an element-specific detector and is used primarily for the determination of sulfur- or phosphorus-bearing compounds (e.g., H_2S, CS_2, SO_2, COS, mercaptans, and alkali sulfides in various pulp milling processes and in petroleum fractions).

The column effluent is fed to a hydrogen/oxygen-rich flame where individual atoms contained in the sample or the reactants of these atoms with hydrogen and oxygen are excited to higher electronic states by the energy of the flame. These excited atoms and molecular fragments subsequently return to the ground state with the emission of characteristic atomic or molecular band spectra. For sulfur, the S_2 species at 394 nm is used, while the 526-nm emission from HPO is used for phosphorous. A narrow-band-pass filter is used to isolate the appropriate wavelength, and its intensity is measured with a photomultiplier tube (PMT).

This detector has a number of severe limitations. These include response dependency on the O_2/H_2 ratio, the H_2 flow rate, the type of sulfur compound, quenching of the sulfur emission by large concentrations of other organic compounds, and even the length of time that the flame is lit.

The quenching of the sulfur emission by other organic compounds and the flame extinguishing problem caused by large concentrations of organics such as the solvent peak are largely overcome by the dual-flame assembly shown in Figure 8.12aa, but at the expense of detection limits as the sample is diluted in passing to the second flame. In addition, the sulfur compound response dependency is eliminated with

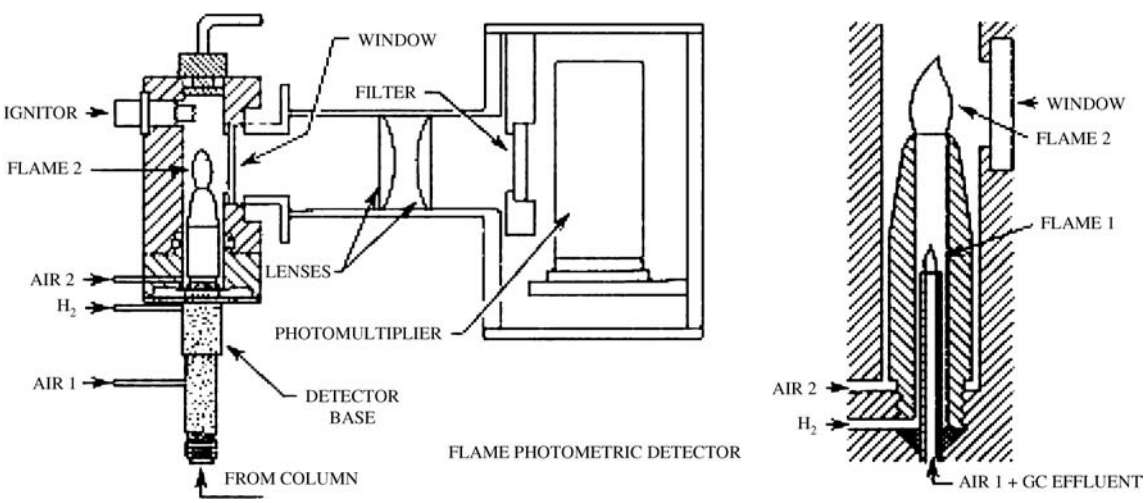

FIG. 8.12aa

Schematic of a FPD showing details of a dual flame assembly. The dual flame scheme is used to minimize the quenching of the sulfur emission by other organic compounds and also to eliminate the flame quenching problem when large concentrations of organics are present. It also provides the same sulfur response for all compounds since they are all oxidized to SO_2 in the lower flame. (Courtesy of Varian Associates.)

© 2003 by Béla Lipták

this detector because all the sulfur compounds are converted to SO_2 in the lower flame.

The FPD response to sulfur and phosphorous is 10^4 greater than its response to hydrocarbons, and its MDQ is at the nanogram level. However, since the detector signal is due to the emission of the S_2 species, it is not a linear function of concentration. Theoretically, it should be proportional to the square of the sulfur concentration (in practice, a factor of 1.8 provides a better fit to the calibration curve), and thus become much more sensitive to changes in sulfur concentration as the concentration increases. The reduced detectability and response characteristic at trace levels of the sulfur sample due to the detector's quadratic response can be improved by doping the carrier gas with a volatile sulfur compound (methyl mercaptan is a good choice) to bring the signal further up on the calibration curve. Finally, the PFD response is greatly dependent on carrier gas identity and flow rate, as well as oxygen (or air) flow rate to the flame. Clearly, it is not a very robust detector.

Pulsed Flame Photometric Detector[13]

In a conventional FPD, the detectivity is limited by light emissions of the continuous flame combustion products. Narrow-band-pass filters used to isolate the wavelength also limit the fraction of the element-specific light that reaches the PMT, and are not completely effective in eliminating the flame background and hydrocarbon interference. In a pulsed FPD (PFPD), the fuel gas (H_2) flow is set so low that a continuous flame cannot be sustained. By inserting a constant ignition source into the gas flow path, the fuel gas ignites and propagates back through a quartz combustion tube to a constriction in its path where it is extinguished; then it refills the detector, ignites, and repeats the cycle. Carbon light emissions and the emissions from the hydrogen–oxygen combustion flame are complete in 2 to 3 msec, after which a number of heteroatomic species give delayed emissions that can last up to 20 msec. These delayed emissions are filtered with a wide-band-pass filter, detected by a PMT. By using the leading edge of the flame background emission to trigger a gated amplifier with an adjustable delay, heteroatomic emission can be amplified to the virtual exclusion of the hydrocarbon background emission. The PFPD is thus uniquely characterized by the addition of this time domain information (illustrated in Figure 8.12bb), which allows the detector to selectively detect many other elements (such as As, Sn, Se, Ge, Te, Sb, Br, Ga, In, Cu, etc.) with no hydrocarbon interference.

In the PFPD illustrated in Figure 8.12cc, hydrogen and air (3) is continuously fed into the small pulsed flame chamber (6), together with sample molecules eluted from the GC column (14). The combustible gas mixture is also separately flowing into (4), a light-shielded, continuously heated wire igniter (12). The ignited flame is propagated back to the gas source through the pulsed flame chamber (6) and is self terminated in a few milliseconds, since the pulsed flame cannot propagate through the small hole at the bottom of the combustion chamber. The continuous combustible gas flow creates another ignition after a few hundred milliseconds in a pulsed (~3 Hz) periodic fashion. The emitted light is transferred with a light pipe (8) through a broad (not narrow)-band-pass filter (9) and detected with a PMD (10).

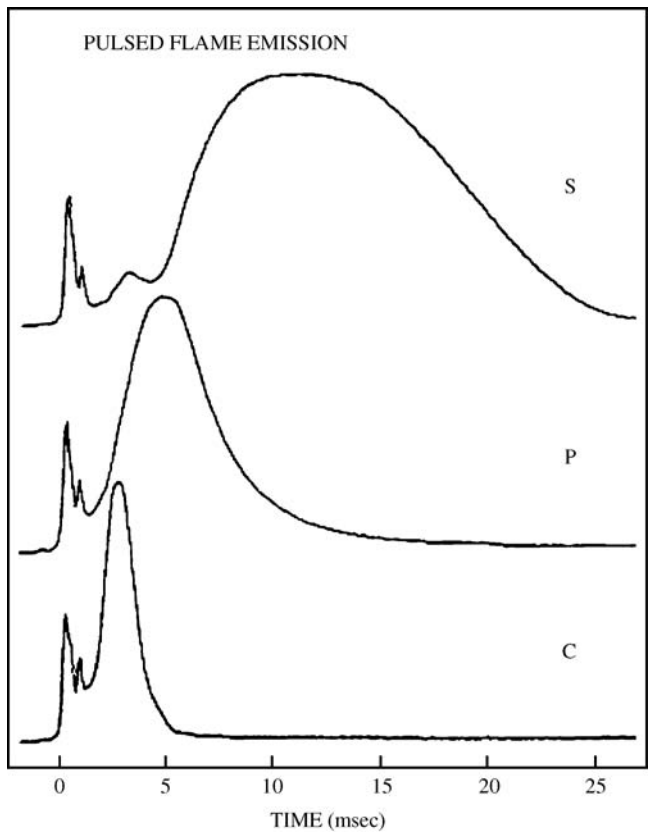

FIG. 8.12bb
Emission spectra of sulfur, phosphorous, and carbon from a PFPD showing their separation in the time domain. The initial hydrocarbon emission spike serves as an excellent reference from which to time the appearance of the selected emission. This provides infinite selectivity against hydrocarbon emission as well as unique heteroatom identification capability. (From Amirav et al., Pulsed Flame Photometric Detector for Gas Chromatography report Tel Aviv University, Tel Aviv, Israel, 2001.)

The PFPD is much more sensitive than the continuous flame version (2×10^{-13} gS/sec, 1×10^{-14} gP/sec, and 2×10^{-12} gN/sec) and much more selective from unwanted hydrocarbon emission, with total discrimination against hydrocarbon compounds (selectivity greater than 10^7). The PFPD sulfur mode has similar detection limits as that of the sulfur chemiluminesce detector (SCD), but its detection of signal to noise is better at practical detection levels (due to its quadratic response). Quenching is still a problem, however. It can be reduced by injecting smaller samples, but at the expense of sensitivity. The real advantage of this detector is with mass limited samples, such as when using capillary columns rather than packed columns, and for trace analysis.

© 2003 by Béla Lipták

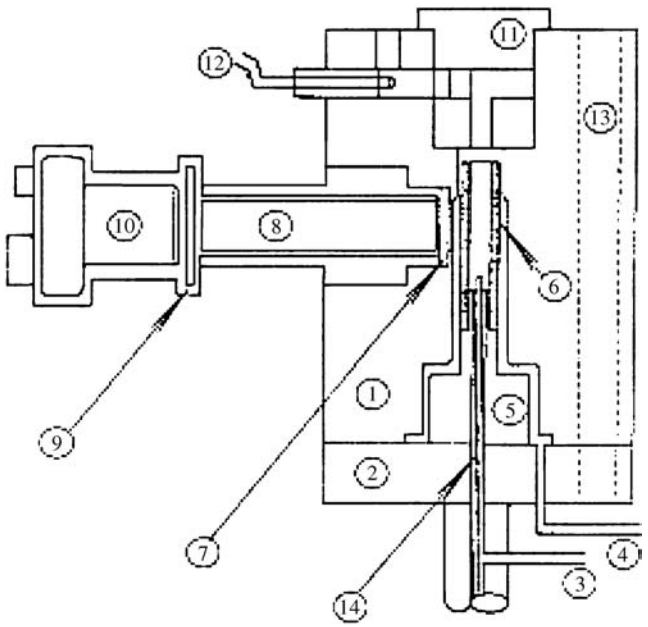

FIG. 8.12cc
Schematic view of a PFPD. (Reprinted with permission from Amirav, A. and Jing, H., Anal. Chem. 67(18) 3305. Copyright © 1995 American Chemical Society.)

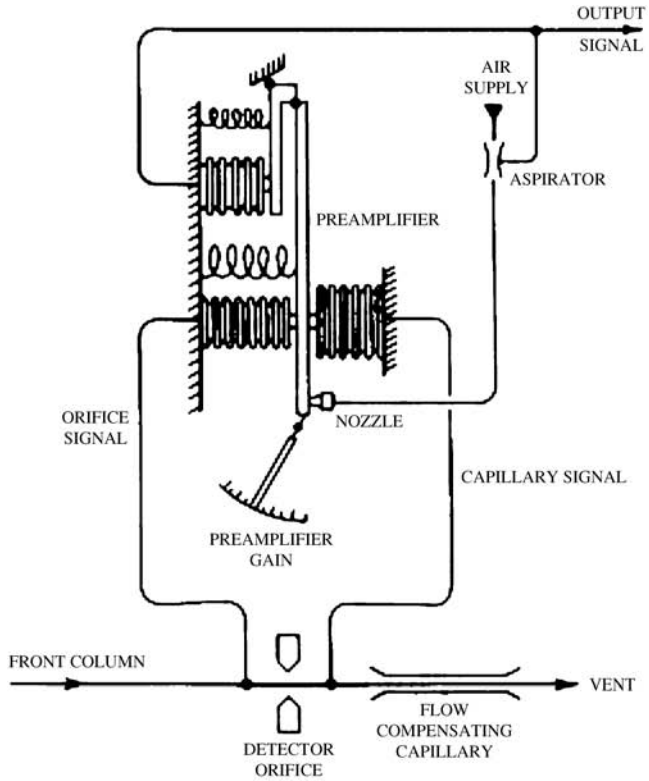

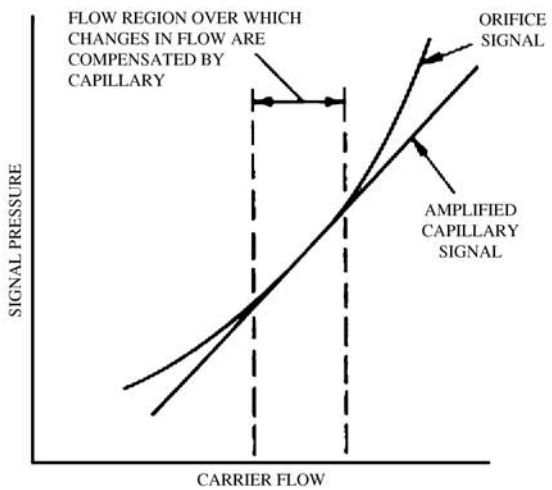

FIG. 8.12dd
Orifice-capillary detector and pneumatic preamplifier. A properly designed capillary compensates for any differential pressure fluctuations across the orifice due to changes in flow rate so that the final differential pressure signal output of the amplifier is the result only of changes in density of the carrier gas due to elution of sample components from the column.

Orifice-Capillary Detector

The orifice-capillary detector (OCD) schematically illustrated in Figure 8.12dd was used in a fully functional, commercially available PGC whose operation was based totally on pneumatic power.[2,14] Designed as a transmitter primarily for control applications, this PGC measured one or two components of the sample. It traded sensitivity for increased reliability and lower installed cost. An intrinsically safe product was ensured by eliminating all electrical power for its operation (the oven was heated by steam and the temperature was regulated by a pneumatic temperature regulator).

The chromatogram generated from the detector was produced by the variation in differential pressure generated across an orifice by a density change in the carrier gas resulting from the elution of sample components from the column. This differential pressure was amplified by a pneumatic amplifier and fed to a pneumatic computer programmed to detect and measure the peak height of the two desired sample components and transmit these measurements to a controller as updated analog trend signals.

There has been a proposal in the literature[15] for increasing the minimum detection levels of such a device. The differential pressure from the OCD is converted directly to a frequency modulated optical signal, and the complete chromatogram is transmitted over optical fiber to a remote station for more sophisticated computer data processing. In addition, the capability of the pneumatic PGC is also expanded to that of a multicomponent analyzer. This design modification changes this PGC to one of a split architecture with the nonelectric analyzer unit in the field and the electronic programmer-controller (PC) remotely positioned. Such an instrument has not yet been commercialized.

© 2003 by Béla Lipták

Miscellaneous Detectors

There are a number of other detectors that have been introduced since the birth of GC, but because of issues such as high maintenance requirements, high customer burden, and unreliable operation over extended periods in the field, they have been limited primarily to laboratory applications. However, there are times when the minimum detection limits of the application cannot be satisfied by the basic detectors normally used in process GC. In those cases, some of these less-than-robust detectors have been used.

Photoionization Detector The photoionization detector (PID) functions by irradiating the column effluent with high-energy ultraviolet (UV) light generated by a high-voltage discharge lamp containing a noble gas (e.g., krypton) (Figure 8.12ee). The ions are collected at a polarized electrode, and the resulting current is measured with a FID-type electrometer. This detector is selective in that only compounds whose ionization potential is less than the UV radiation will be ionized. Compounds with aromatic ring structures give the highest sensitivities (as much as 10 times the FID), while compounds like methane and ethane with ionization potentials greater than 12.98 eV give no response with the commonly used PID tubes (9.5, 10.0, 10.2, 10.9, and 11.7 eV). The PID has a dynamic range of 10^7, extending from 2 pg to 30 mg. An advantage to this detector is that it does not require auxiliary gases, as does the FID. This advantage is offset by the fact that it does not respond sensitively to many of the compounds of interest, and it requires much maintenance to maintain quantitative accuracy.

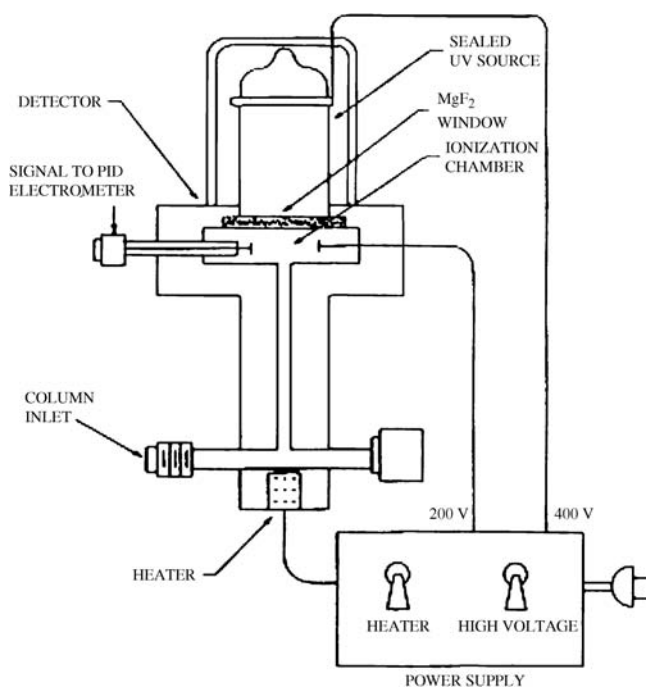

FIG. 8.12ee
Principal elements of a PID showing a 200 V supply for the collecting electrodes and a separate 400 V supply for the UV lamp. (From Driscol, J.N. and Spaziani, F.F., "PID Development Gives New Performance Levels," Research/Development, May 1976.)

Electron Capture Detector The electron capture detector (ECD) (see Figure 8.12ff) is yet another type of ionization detector. The column effluent passes between two electrodes, one of which has been treated with a radioactive source (tritium or nickel-63; the latter is preferred because of its extended detector stability) that emits high-energy electrons. These electrons produce large quantities of low-energy thermal electrons in the carrier gas, which are in turn collected by the other electrode to produce a steady-state current in the presence of pure carrier gas. Compounds eluting from the column that have an affinity for thermal electrons reduce this steady-state current, thereby producing the chromatogram.

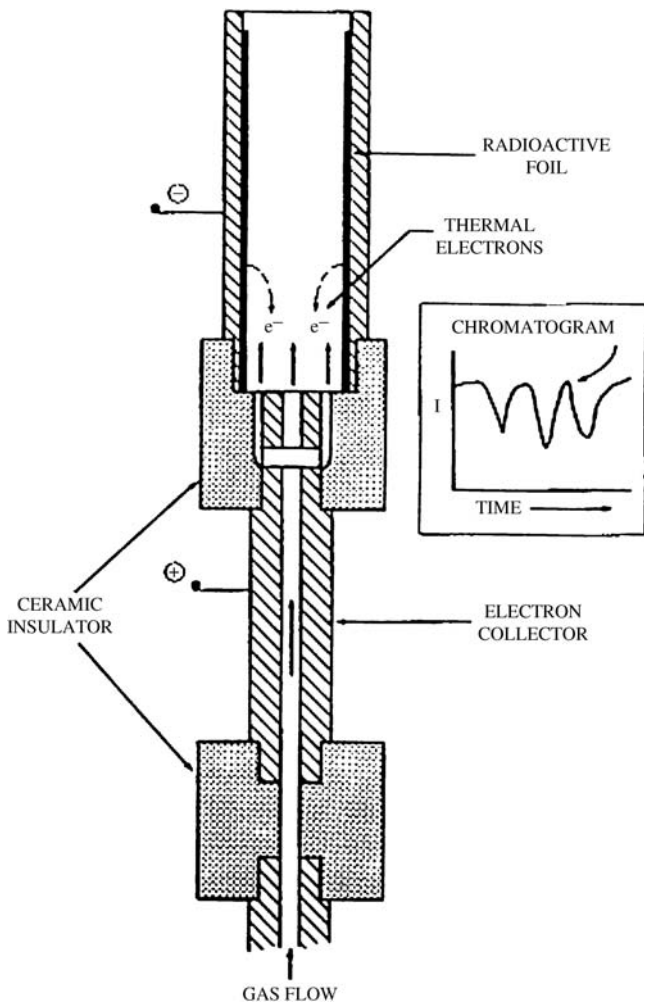

FIG. 8.12ff
Schematic of an ECD arranged for constant voltage operation. Also shown is the chromatogram produced by the reduction of the standing current when compounds of higher electron affinity than the carrier gas are eluted from the column and pass through the detector. (Courtesy of Varian Associates.)

© 2003 by Béla Lipták

The detector is thus highly selective, with halogenated compounds being the most responsive (detection at the picogram level). Other groups exhibiting good selectivity include anhydrides, peroxides, conjugated carbonyls, nitriles and nitrates, and sulfur-containing compounds.

Maintenance is of critical importance with this detector, more so than with any other GC detector (except the helium ionization detector, discussed next). It responds exceptionally well to oxygen, necessitating leak-free systems and oxygen-free carrier gases. Also, response to water vapor can cause unstable baselines so that molecular sieve traps (which require periodic maintenance) are required in the carrier gas lines. Finally, care must be taken to use this detector only with columns of very low bleed, as the condensed stationary phase in the detector can easily be polymerized (by radiation and electron bombardment) to a hard insoluble deposit, which is almost impossible to eliminate and which interferes with the proper functioning of the detector.

Although a pulsed mode of operation has improved the linear range of the ECD, it has not improved its robustness, and all of the above-outlined concerns still apply.

Discharge Ionization Detectors In contrast to the older-design ionization detectors that required a radioactive source of strontium, nickel, or tritium to produce metastable helium atoms by collisions with the high-energy electrons generated by the source, the newer designs require only helium. Two electrodes support a low-current arc through the helium makeup gas flow. The helium molecules between the electrodes are elevated from their ground state to form a helium plasma cloud. As the helium molecules collapse back down to the ground state, they give off a high-energy photon that will ionize all compounds having a ionization potential lower than 17.7 eV. Thus, the ionization detector will respond to volatile inorganics that the FID does not (such as NO_x, CO, CO_2, O_2, N_2, H_2S, and H_2). The ions are collected at polarized electrodes to produce a current, as in any ionization detector.

One version of this detector utilizes a steady-state helium plasma cloud, while a more recent design (see Figure 8.12gg) pulses the discharge (pulsed discharge detector (PDD)). Performance of the discharge ionization detectors is equal to or better than that of the older-design ionization detectors that require radioactive sources. In its helium photoionization mode of operation, it is a universal, nondestructive, high-sensitivity detector responding to fixed gases in the low parts per billion range. Its response to both inorganic and organic compounds is linear over a wide range (10^5).

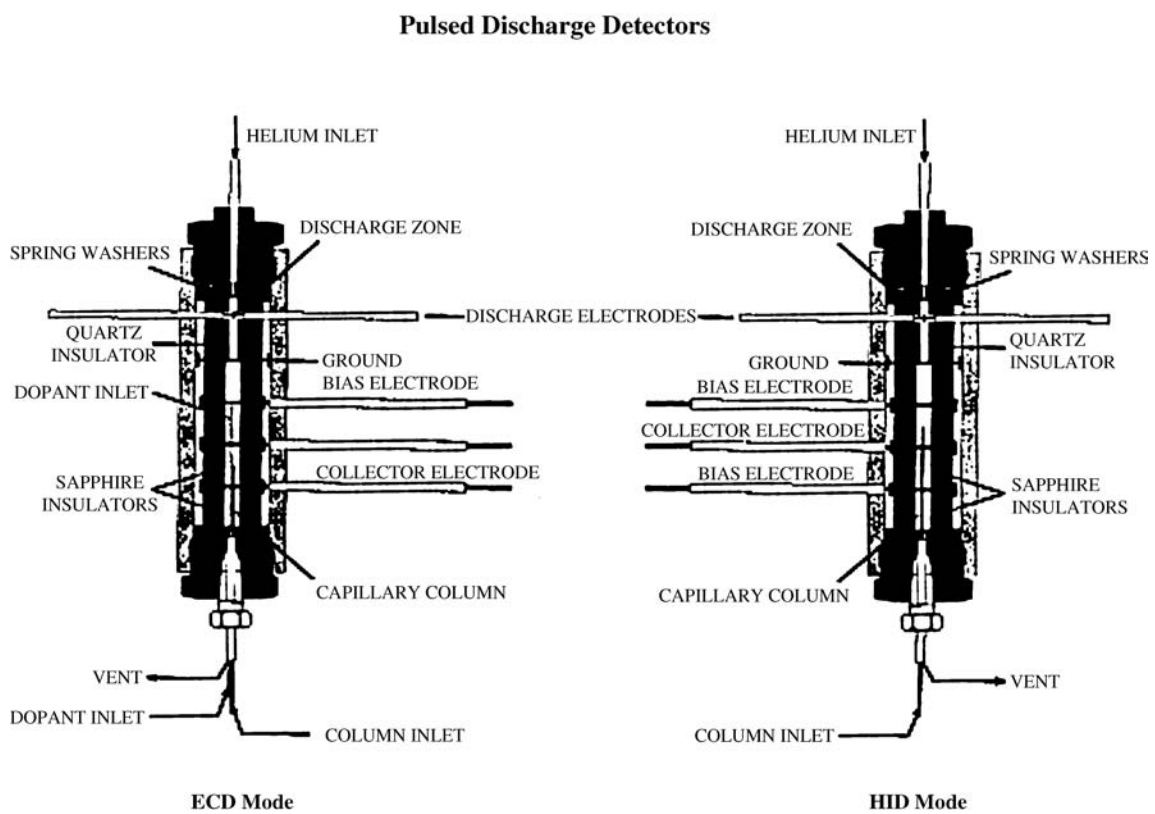

FIG. 8.12gg

Schematic of a pulsed discharge detector configured as a PHID and as a PECD. A stable low power, pulsed DC discharge, in helium is utilized as the ionization source. Eluents from the GC column flowing counter to the flow of helium from the discharge zone are ionized by photons from the helium discharge and the resulting electrons are focused toward the collector electrode by the two bias electrodes. The principal mode of ionization is photoionization in the range of 13.5 to 17.7 eV. (Courtesy of Valco Instrument Co. Inc.)

© 2003 by Béla Lipták

The PDD is extremely versatile. If the carrier gas is doped with methane at the column exit (see Figure 8.12gg), the PDD can operate as an electron capture detector with sensitivity and response characteristics similar to those of a conventional radioactive ECD. Its MDQ for halogenated compounds ranges from 10^{-15} to 10^{-12} g.

In addition, when the helium discharge gas is doped with a suitable noble gas such as argon, krypton, or xenon (depending on the desired final ionizing power), the PDD can function as a specific PID for selective determination of aliphatics, aromatics, etc., as discussed in the section devoted to photoionization detectors.

The HID is a high-maintenance item. It is the only detector that can measure permanent gases at the 1-ppb level. Therefore, leak-free plumbing is an absolute necessity. It responds to trace impurities, including water, in the carrier gas, thus requiring traps in the carrier gas stream to ensure the removal of these trace impurities. Clearly, this is a disadvantage for users not willing to devote maintenance time to monitor and frequently replace these traps. In addition, the HID is easily fouled by deposits from column bleed, which also contributes to a high noise level. Thus, its lowest detection limit is reached only with active solid supports such as molecular sieves.

CARRIER GAS FLOW CONTROL

Controlling carrier gas flow rate is of critical importance if one is to reproduce peak areas and retention times, and thus automate the analysis. Two methods, pressure control and flow control, may be used, but pressure control is by far the favored procedure used in process gas chromatographic instrumentation, for the following reasons:

1. A pressure regulator has an almost immediate response to downstream upsets (such as valve switching). A flow controller responds to flow upset only as fast as its flow set point allows.
2. A pressure regulator has the ability to provide some compensation for variation in retention time caused by changes in temperature.
3. A pressure regulator has the ability to supply the proper carrier gas flow rate to the column even in the presence of downstream leaks between it and the sample valve.

All pressure regulators are, to some degree, sensitive to temperature and input pressure. Tank regulators will not provide sufficiently stable output pressures under varying conditions of temperature and tank pressure. Thus, another regulator is mounted in the line close-coupled to the analyzer. Ideally, it should be mounted in the analyzer oven compartment to ensure a stable temperature environment, but few if any can withstand the 398°F (200°C) temperatures that are sometimes used. Therefore, it is important that this regulator have a minimum temperature coefficient (not as important a requirement when the analyzer is mounted in an analyzer shelter that has a fairly stable temperature environment) and that it can tolerate the input pressure changes it will experience from the tank regulator that is likely to be located outside, exposed to the varying temperatures of the environment.

For pressure drops across the column of 75 psi (5.3 bars), the relative error in peak area will be 1.7 times the relative error in the pressure drop. Therefore, to limit the error from this source to 0.5%, one must control pressure to within 0.4 PSIG (0.03 bars). In addition, assuming one is using a pressure regulator that is referenced to ambient pressure, the error caused by variations in ambient pressure will be 1.4 times the relative barometric pressure variation. Thus, errors of 0.2 to 0.5% due to changes in weather are difficult to eliminate.[16]

Recently, electronically controlled pressure regulators have become available and have been incorporated into PGCs. The heart of such a regulator is a solid-state pressure transducer that produces an electrical output proportional to pressure. This output is used to operate the integral control valve and to produce an output signal. In the case of the transmitter, miniature fluidic thermistors (fluistors) are used as pressure/flow controllers. Such an addition to the PGC is a tremendous advantage for maintenance staff since it allows for control of carrier gas flow rate from the remote analyzer maintenance station (AMS) rather than at the unit.

PROGRAMMER-CONTROLLER

The PC section is an extremely important part of a modern PGC, containing all the electronics to power the system, the controller, the data reduction hardware and software, and, of increasing importance, the communications package. Its design has changed radically over the past few years with the advances in electronic technology.

The PC unit can in theory be located in the field at the analyzer (stand-alone) or in a remote area such as the control room or instrument room close by (split architecture). The stand-alone design is by far the most popular. Although in this option the analyzer electronics are also usually located within the PC section, the primary purpose of the PC is to control all the functions in the analyzer. These include sample injection and column switching as well as various housekeeping tasks, such as modification of the detector signal, auto-zeroing, peak gating, integration, conversion of area units to concentration, and data transfer to the proper location. The transmitter utilizes what looks like a split-architecture design in that the electronics are packaged separately from the analyzer, but the two are close-coupled to each other in the field to yield a stand-alone PGC.

© 2003 by Béla Lipták

Most PC designs allow for operation in a Division 1 area when used with X or Y* air purge, and in Division 2 areas without purge.

Programmer

Programming tasks are managed by an on-board microprocessor-based computer. In older microprocessor-based PGCs, the PC was contained on several plug-in circuit boards located in a separate compartment from the analyzer. Current designs reflect the advances in electronics and focus on completely modular designs that allow for complete replacement of large portions of the electronic package (plug and play) for rapid repair and ease of maintenance. A number of provisions are made in the design to ensure the unit's rapid return-to-service in case of power failure.

Peak Processor

The peak processor section of the programmable controller has as its primary functions the detection of chromatographic peaks produced by the sample constituents of interest and the determination of the appropriate peak areas or peak heights. Peak detection is performed by comparing the instantaneous slope of the original (i.e., the rate of change) to some reference value. The objective is to differentiate between noise and the true onset of a peak. The peak detector can be disabled except for distinct time intervals (defined by so-called gates) and integration performed only if a peak is found within these gates, or alternatively, integration can be forced between the gates.

Most systems have the capacity of measuring different types of peaks and allocating areas on the basis of some internal logic. This peak allocation is usually determined as follows:

1. Incompletely resolved peaks: Areas are allocated by dropping a perpendicular from the valley minimum to the baseline.
2. Proportional area allocation: Areas are allocated in proportion to the gross areas of the peaks.
3. Tangent skimming: Used for small rider peaks on the tail of major peaks. A tangent is drawn from the valley point to the back of the rider peak.
4. Forced integration: Bypasses slope detector logic and forced integration between start and stop points.
5. Peak height: Value of the peak maximum used as direct measure of concentration.

The peak areas are then converted to concentration using information obtained previously from the analysis of calibration standards. Both the peak selection and peak measurement procedures are selected by the user from a menu of choices at the time of setup.

* These are Instrument Society of America (ISA) definitions of purge systems. X purge allows a general-purpose instrument to be placed in a Division 1 area, while Y purge allows for a Division 2-rated instrument to be used in a Division 1 area.

Data Acquisition

In modern microprocessor-based PGCs, the amplified detector signal is sampled by an analog-to-digital (A/D) converter and the digital values are stored in the RAM for processing. This is in contrast to the older procedure for acquiring chromatographic data, that is, monitoring the detector signal as a function of time with a potentiometer recorder. Recorder outputs are still present in some currently available PGCs to assist in setup and maintenance purposes. However, the record that is produced may not be as diagnostically useful as in the older designs, since, in many cases, it is not a record of the raw detector signal but an analog signal reconstructed from the RAM-stored filtered digital values.

Input–Output The term *process control* generally implies the direct control of a process variable by an on-line instrument. Commonly, adjustments are made continuously in process conditions in order to reduce to zero the difference between the measured value of this variable and a desired (set point) value. For instruments whose output is a continuous-trend representation of the measured variable (e.g., pH, conductivity, pressure, temperature, or flow), there is no problem in using this signal directly in a control scheme by comparing it to the set point and generating an error signal that is used to drive the process back to the set point. However, if the process variable is the concentration of one or two process stream constituents, the use of a chromatograph for the measurement presents special problems. The chromatographic signal is not continuous, but rather is transient. Furthermore, more than one component is represented in the information contained in the chromatogram, and this information is encoded as a function of time. Therefore, to be useful as a control instrument, the output must be deciphered and presented to the control loop in a form that is useful. For the traditional analog controller, this consists of a continuous analog signal (4 to 20 mA) whose magnitude is proportional to the concentration of the desired process variable. For an *intelligent* controller, this consists of a digital signal encoding the desired value of the process variable. Thus, a modern chromatograph must be able to deliver either of these outputs.

The input–output (I/O) characteristics of a typical PGC are summarized in Figure 8.12hh. Cyclically updated 4- to 20-mA analog trend signals proportional to the concentration of the analyzed peaks are available, as well as digital communication lines, RS-232 or RS-485. Various alarm signals are also generated. Additionally, provision is sometimes made to accept inputs from other devices where these data are required for a calculation of the desired process variable (e.g., flow rate and density measurements for BTU analysis).

Communication

Communication with the plant's distributed control system (DCS) is a must for modern PGCs. However, because of the large number of different DCSs in place—all using communication systems proprietary to the manufacturer of that

© 2003 by Béla Lipták

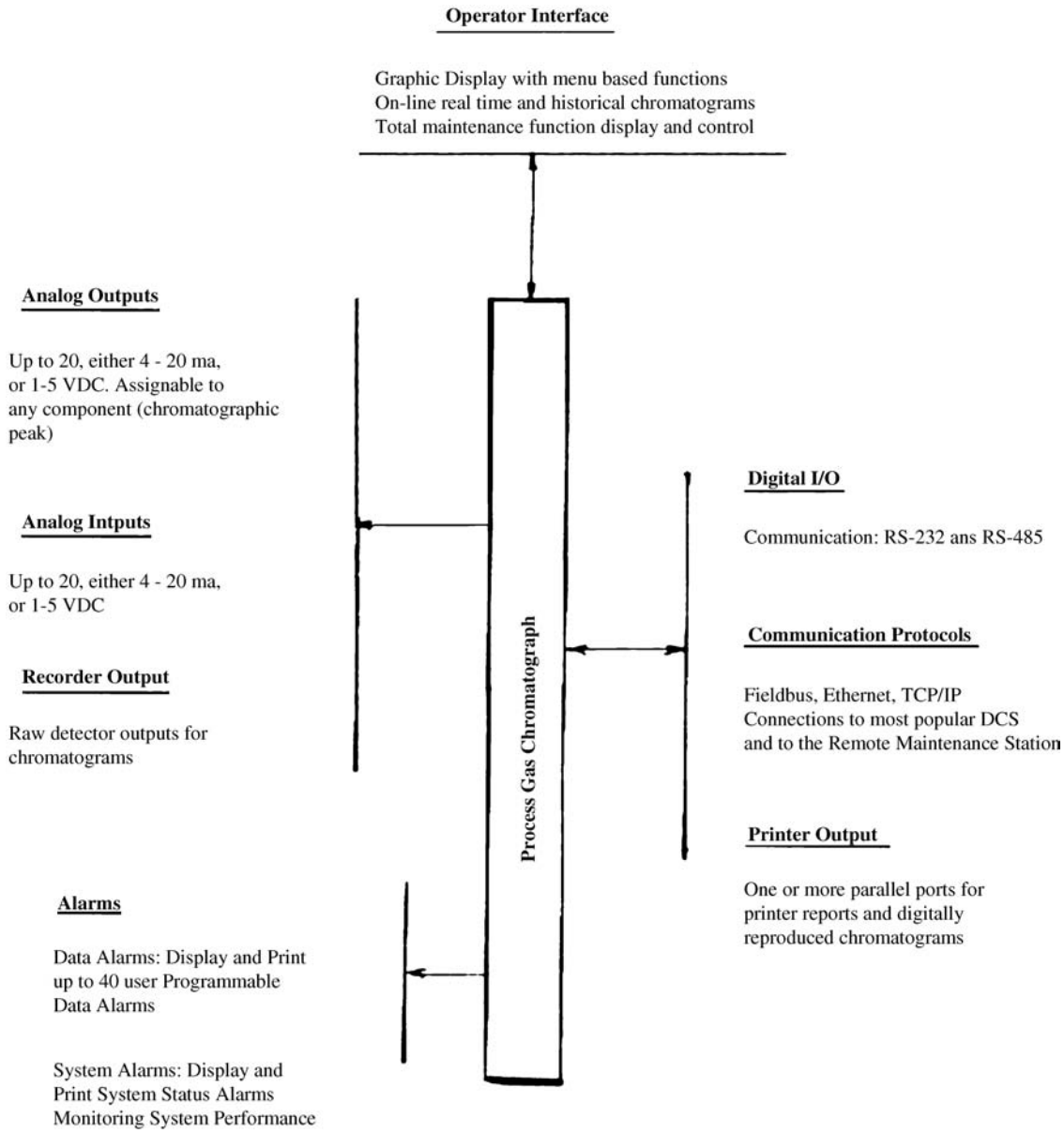

FIG. 8.12hh
I/O characteristics of a typical microprocessor-based PGC.

system—direct interfacing with all networks is all but impossible for the user to ascertain that a *gateway* is available to interface the PGC to his or her control system.

Over the years there has been much discussion and research into the development of a digital communication system to replace the traditional 4- to 20-mA analog standard. Worldwide adoption of an industry standard is still in the future. However, emerging from the various discussions within standards groups is a consensus that the local PGC will never be connected directly to the main data highway, but rather, communications will take place on a so-called fieldbus.

Fieldbus is a generic term that describes a new digital communication network that will be used in industry to replace the existing 4- to 20-ma analog signal standard. The network is a digital, bidirectional, multidrop, serial-bus communication network used to link isolated field devices. The bidirectional specification allows data to be transmitted in two directions at the same time, multidrop can be interpreted as a single bus with many nodes connected to it, and serial means that the data are transmitted serially according to RS-232 or RS-485 protocol.

Currently, there are two advanced protocols for all digital communication with field devices for measurement and control of continuous processes. These are the Foundation Fieldbus (FF) and the Profibus-PA (also in the field is a hybrid analog/digital protocol called HART, which uses a frequency-based digital signal superimposed on the 4- to 20-mA analog signal).

© 2003 by Béla Lipták

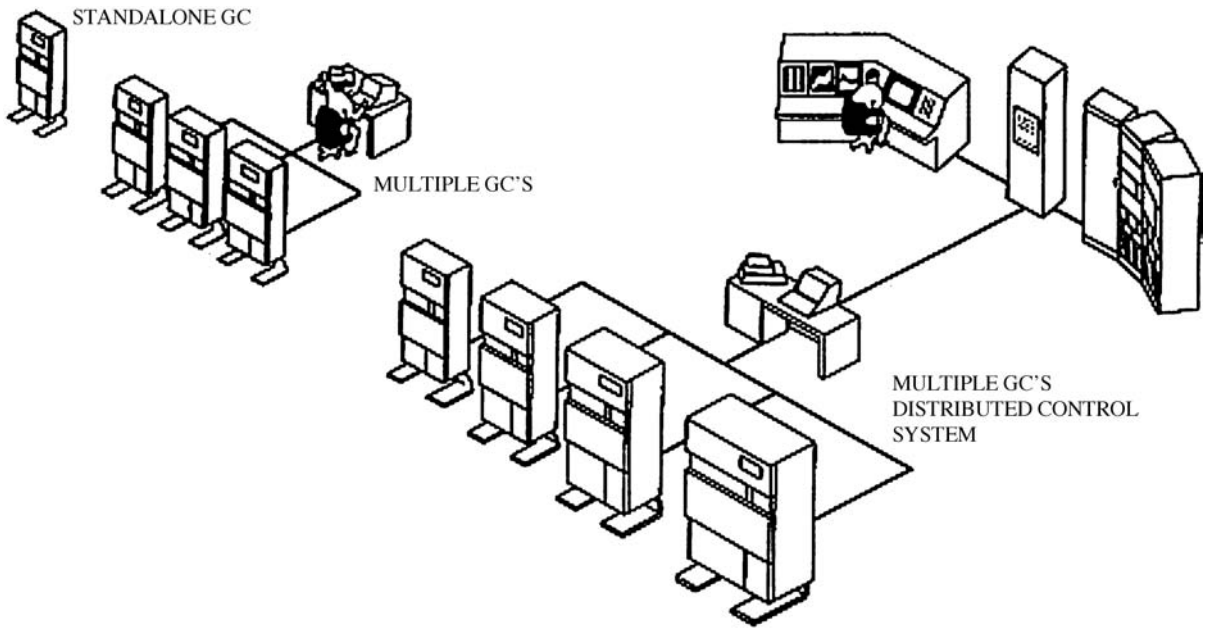

FIG. 8.12ii
Illustration of the various hardware and communication configurations that must be supported by a PGC. (Courtesy of The Foxboro Co.)

In the midst of this fast-changing environment, current PGC design must allow for operation in a number of modes—stand-alone or multiple—reporting either to a single process measurement, control computer, and compound computer, or to the DCS (Figure 8.12ii). Thus, many modern designs support the popular local area network (LAN) Ethernet protocol, as well as the new FF and Profibus-PA and older Modbus protocol.

Operator Interface

The operator interface has undergone many changes during the years following introduction of the gas chromatograph as a process control measurement device. In the original, rather crude chromatograph (from a modern technology viewpoint), the operator interface for control data also served as the maintenance technician's interface. However, in the modern system, the two functions have been largely separated. GC data, status, and validation inputs necessary to control and evaluate the process are sent to the control room, and the DCS console thus becomes the process or plant operator's interface. Maintenance and management data required to achieve maximum uptime are sent to a separate I/O interface called an analyzer maintenance station. This station can be positioned at the analyzer or at a remote location close by, with access to the system made with the ubiquitous industrial-hardened personal computer, or through a modem at a remote location some miles away. At the PC-based network workstation, any analyzer can be programmed and monitored. Graphical displays are available as an operator aid for simple operation, maintenance, and diagnostics. In addition, most programmer-controllers have a close-coupled I/O

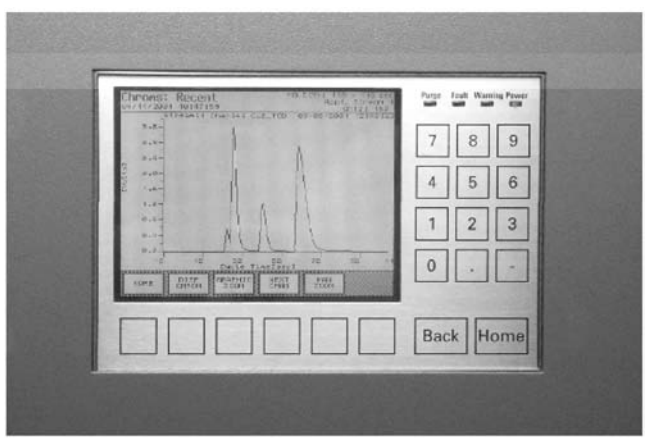

FIG. 8.12jj
Close-coupled full function AMS panel. (Photo courtesy of Siemens Applied Automation.)

interface that includes a keyboard or display panel (illustrated in Figure 8.12jj) providing access to the application and data reduction programs. Real-time chromatograms can be displayed here as well as hours of stored chromatograms complete with voltage and cycle times for future comparisons to simplify ongoing maintenance. Thus, from either of these locations, the maintenance technician can monitor the performance of the analyzer and reprogram the unit if necessary.

The full-featured close-coupled I/O interface described above is not available for the transmitter. Instead, a panel of LED indicator lights visible through a window in the electronics enclosure (see Figure 8.12kk) provides the technician

© 2003 by Béla Lipták



FIG. 8.12kk
Close-up view of the see-through LED panel in the electronic enclosure. (Courtesy of Rosemont Analytical Inc.)

with an overview of the instrument's operational status. Further information and programming options are available through a PC-based AMS.

A communication structure that combines all of the above-discussed options is shown in Figure 8.12ll. The user requirements will vary depending on the size and complexity of the plant or process under consideration. Thus, the PGC is designed to satisfy simple as well as complex requirements.

Alarms and Diagnostics

The amount of self-checking and diagnostic features that will continuously monitor the health of the instrument and alert personnel to problems and their source will continue to increase in importance as an integral part of the PGC design.

Present units have two types of alarms: system alarms and data alarms. System alarms are concerned with the pneumatic, mechanical, and electrical operation of the system. They include low carrier gas pressure, low calibration gas pressure, low sample flow, detector failure, oven temperature high/low, PROM error, and EEPROM error.

The data alarms (Hi/Lo) are used to monitor the results of the analysis. In some cases, these alarms alert only the operator; in other cases, action is taken automatically (such as not updating the trend signal with a new value when larger- or smaller-than-expected deviations occur). Retention time drifts and low area counts obtained for a calibration sample are examples of this type of alarm. Additionally, continuous read and write tests on the RAM memory are performed by the central processing unit (CPU) to detect the failure of a particular cell.

Quantitation

Since peak area is less sensitive to instrument variables than peak height, it has become the method of choice for translating the chromatographic record into process sample composition.

There are four principle methods used to relate the record of detector response to the sample composition. They are:

1. Reference to calibration standards
2. Relative response factors
3. Internal normalization
4. Internal standard

All of these methods rely on some form of calibration of the detector by comparing its response to a calibration standard containing a known concentration of selected compounds. It is not always possible to prepare a standard of the process components (because of instability of the compounds, dew-point problems, expense, etc.) However, the preparation of stable mixtures of reference compounds for which the relative detector responses to the compounds of interest are known may be possible. Process sample composition is then calculated using this information. The advantage over direct calibration is that all components of the sample do not need to be separated, only the components of interest. This leads to faster and simpler solutions to some application problems. The disadvantage of these direct calibration procedures is the direct effect that instrument variables (such as pressure of the sample loop) have on the accuracy and precision of the analysis. Normalization, on the other hand, eliminates sample volumes and pressure as variables, but requires that all sample components be measured. The normalization procedure involves taking the individual component measurements and adjusting each according to its response factor, and then dividing by the sum of these individual adjusted areas to yield the percent composition of the sample.

SAMPLE HANDLING

The importance of the sample handling system and sample conditioning system (SHS/SCS) for ensuring reliability to the operation of the PGC and validity to its output cannot be overemphasized. In the author's experience, over 70% of the problems encountered in maintaining gas chromatographs can be traced to failures in the SHS/SCS. The reader who wishes to read detailed information on this subject should refer to Section 8.2 and the bibliography at the end of this section.

Unlike the laboratory chromatograph, when samples are usually held in an appropriate container and hand-carried to the laboratory where the chromatograph is situated, the PGC must receive a sample straight from the sampling point, untouched by human hands. Moreover, for the PGC

© 2003 by Béla Lipták

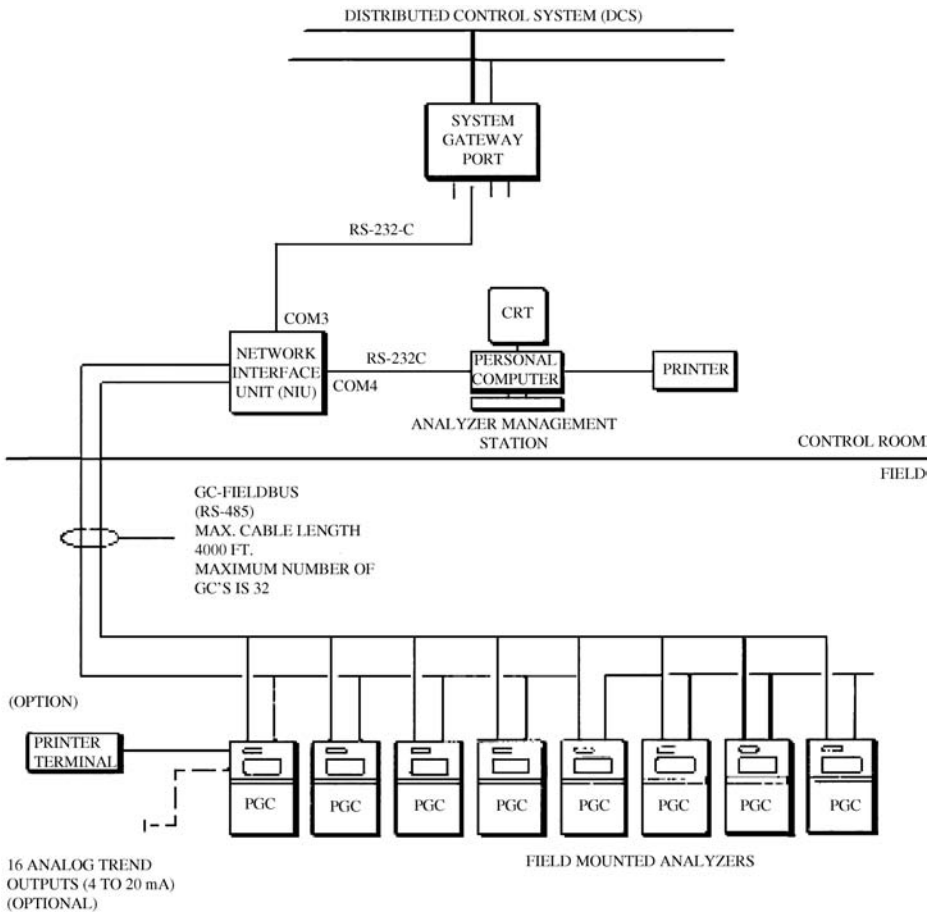

FIG. 8.12II

A typical multi-PGC interface to the DCS. Some variation will exist among the various vendors. In this configuration only PGC data, validation, system alarms, and stream sequence control are available to the DCS operator. All control and data communication is available to the AMS operator. (Courtesy of The Foxboro Co.)

to provide an accurate analysis of the process stream, a sample must be made available that is representative of the process composition. This is no trivial task, since the process sample may be quite hot, may be under considerable pressure, or may contain water vapor, solids, condensed liquids, and so on. Thus, the PGC requires a sample handling front end to obtain, transport, and condition the sample.

The sample handling and conditioning system must:

1. Obtain a sample of the process stream that is representative of its bulk composition
2. Transport this sample to the analyzer within a time period such that the transport time plus the analysis time (i.e., the turnaround time) is short enough to satisfy the requirements of the control algorithm
3. Condition the sample (i.e., clean, vaporize, condense, adjust pressure, dilute, etc.) and present it to the analyzer in a condition appropriate to the analyzer specifications
4. Return the unused sample either to the process or to a waste disposal system

Sample Probe

Because the low-velocity portion of the sample that is found along the walls of a process pipe is not representative, and also because debris is likely to accumulate along the walls, a simple tap into the process line to obtain a sample is not acceptable. A sample probe is required, which by virtue of its design can also serve quite effectively as a preliminary stage of conditioning. This is accomplished by 1) removing the sampling point from the walls; 2) orienting the probe so that the sample must turn 180° at the point of entry, thus excluding larger particles that cannot make the turn due to their momentum; 3) including a large-porosity filter in the probe; and 4) designing the probe to be large with respect to the sample line and allowing gravity to assist in separating particles from the gas phase.

Sample Transport

The sampling point and analyzer may be separated by hundreds of feet. It is necessary, therefore, to divert a portion of the process stream (through an appropriate probe), transport

© 2003 by Béla Lipták

it to the analyzer, and return it either to the process stream at a lower pressure point or to a suitable waste disposal system. The time necessary to transport the sample to the analyzer can, in some cases, constitute the largest share of the system dead time or turnaround time. Mounting the analyzer closer to the sampling point is the most direct way of decreasing this time. Lacking this alternative, the next best solution is to increase the flow sample in the line. An added plus to using a so-called fast loop is that it provides additional mixing due to turbulent flow, and thus further ensures a representative sample.

Sample transport time is a function of sample line length, line diameter, the absolute pressure on the line, and the sample flow rate. Neglecting compressibility, the transport time for a gas sample is given as

$$t_{lag} = \frac{VL(p+14.7)(530)}{F(14.7)(t+460)} \qquad \textbf{8.12(4)}$$

where

V = volume of sample per unit length, ml/cm
L = length of sample line, cm
F = volume flow rate (ml/min) of sample under standard conditions (14.7 PSIA, 70 °F)
t = temperature of sample, °F
p = sample line pressure, PSIG

Additional time must be allowed to purge sample conditioning equipment and any unswept volumes that are present due to poor design. Commonly, systems are designed to provide sample flow rates between 0.5 and 15 GPM (2 and 50 l/min).

Sample Conditioning

Conditioning of the sample either to allow easier handling or to put it into a form acceptable to the analyzer is always required to some degree. Conditioning may be as simple as pressure reduction and filtering or as complex as scrubbing and drying. Pressure reduction is the most effective way to prevent condensation of a condensable gas sample, and maintenance of a minimum pressure is the most effective way to prevent a liquid sample from vaporizing. Thus, pressure regulators for vaporization and pressure reduction are a common element of a conditioning system. In all cases, conditioning must be accomplished without affecting the sample composition. Some common sample conditioning elements are given in Table 8.12mm.

The basic technology of sample conditioning has not changed much over the last 40 years. Currently, a SCS is constructed using components (listed in Table 8.12mm) that have evolved from industries such as pneumatic and hydraulic service. These are mounted in a cabinet (which is usually secured to the outside wall of the analyzer shelter) and interconnected with tubing and fittings. Not being designed specifically to fit process analyzer needs, they have large dead volumes that are difficult to purge, thus leading to decreased sample system performance.

Recently, there has been some initiative directed toward changing the above-discussed conventional design to fit the specific requirements of the process analyzer.[17,18] The potential of a smart modular miniature process analyzer sampling system integral to the analyzer is being explored with the idea of decreasing the installed cost of the analyzer, increasing reliability of the system, and, at the same time, decreasing cost of manufacture. One problem with sampling systems, however, is that they are application dependent. Thus, the design must allow for the convenient connection of simple modules to form the more complex one required for the particular application. A proposed design (borrowed from the gas management systems used in the semiconductor industry) shown in Figure 8.12nn[19] uses a substrate assembly that provides the flow path for a process sample and consists of a variety of sample conditioning components. In turn, it is attached to a manifold system that will also accept various flow components and provide a flow path between two or more substrates.[20,21]

Thus far, implementation of these ideas has been restricted to fairly simple and straightforward applications such as clean, dry, light hydrocarbon streams.[22] The SHS used in this case is diagrammed in Figure 8.12oo and consists of four substrate assemblies manifolded together to produce the product shown in Figure 8.12pp.

The PGC transmitter described previously is offered as a single- or dual-process stream analyzer (with two sample calibration streams) complete with a modular sample handling system for close-coupling to the sample tap.

Unfortunately, sampling systems usually fail during process upset conditions (just when the analysis is most needed to bring the process back into control). Thus, whenever possible, these systems should be overdesigned to be able to handle the upset condition. A process data sheet containing the information summarized in Table 8.12qq is required to design a proper sample conditioning system. This definition of all the process conditions such as pressure, temperature, phase, particulates, chemical composition, physical properties (viscosity, density, etc.), and any possible process upsets that might occur, such as breakthrough of contaminants and runaway thermal reactions, ensures a design that will guarantee a correct sample presentation to the analyzer or, alternatively, a controlled shutdown or process hold with accompanying alarm signal.

Multistream Analysis

The PGC must be able to accommodate at least two streams, the process stream and the calibration or standard line. The clean calibration sample can bypass the SHS and be plumbed directly into a stream-switching valve that will allow the process stream to be diverted while the standard sample is flowing through the analyzer sample loop (Figure 8.12rr).

The sharing of one PGC among a number of process streams is not recommended but, unfortunately, is common

© 2003 by Béla Lipták

TABLE 8.12mm
Common SHS/SCS Elements

Element	*Function/Comments*
Filter	Remove particulates from the sample. Filtering below 10 microns requires vigilant preventive maintenance unless some sort of self-cleaning filter can be devised (e.g., cyclone separation with automatic cleanout).
Vaporizing regulator	If possible, at least in the case of a PGC, it is best to present the sample as a vapor. The vaporizing regulator is best located at the sampling point (to provide short transport times for the sample), but it can be placed at the analyzer.
Condensors/separators	Used in applications where condensables are to be removed from the vapor sample
Coalescers	Used to force finely divided liquid droplets to combine into larger droplets so they can be separated by gravity
Knockout pots	Used to collect liquid that has been separated from the sample. Should be provided with automatic drains.
Aspirators, ejectors	This is the preferred pump (by creating a vacuum) if the sample pressure is not sufficient to drive the sampling system. It is inexpensive and quite reliable because of the absence of moving parts
Rotameters	Consists of a ball or float in a tapered tube. Commonly used to measure flow. It is quite **unreliable** as the float tends to stick when the steam becomes dirty. It is a good indirect indicator of filter integrity.
Pressure regulators	Nonbleeding type, using corrosion resistant stainless steel and Teflon. Used to regulate pressure between sampling point and the analyzer as a means of controlling sample flow rate. Since the quantity of sample is directly proportional to the sample in the loop, in most cases a "block and bleed" configuration is used at the analyzer to equilibrate the sample to atmospheric pressure (this still does not eliminate inaccuracies due to changes in atmospheric pressure).
Pressure gauges	Installed downstream from regulators as an aid in setting regulator pressure and as an aid in maintenance checks. Installing in high speed by-pass lines and downstream of the analyzer eliminates extended turnaround problems that can occur because of the time required to flush sample from the pressure gauge bourdon tubes.
Steam or electrical heat tracing	To avoid condensation in the sample lines.

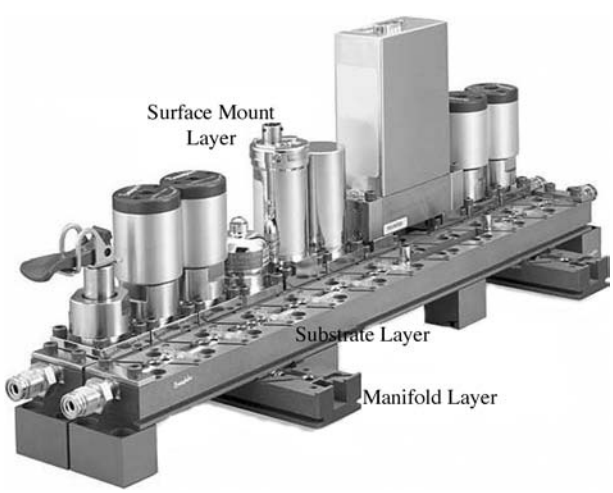

FIG. 8.12nn
Illustration of the architecture of a modular SHS with the various miniature SHS components surface mounted amd interconnected on a so-called substrate. Individual substrates can then be manifolded together to form the comple sample handling system. (Photograph ©2002 Swagelok Company; text ©2002 R. Annino.)

© 2003 by Béla Lipták

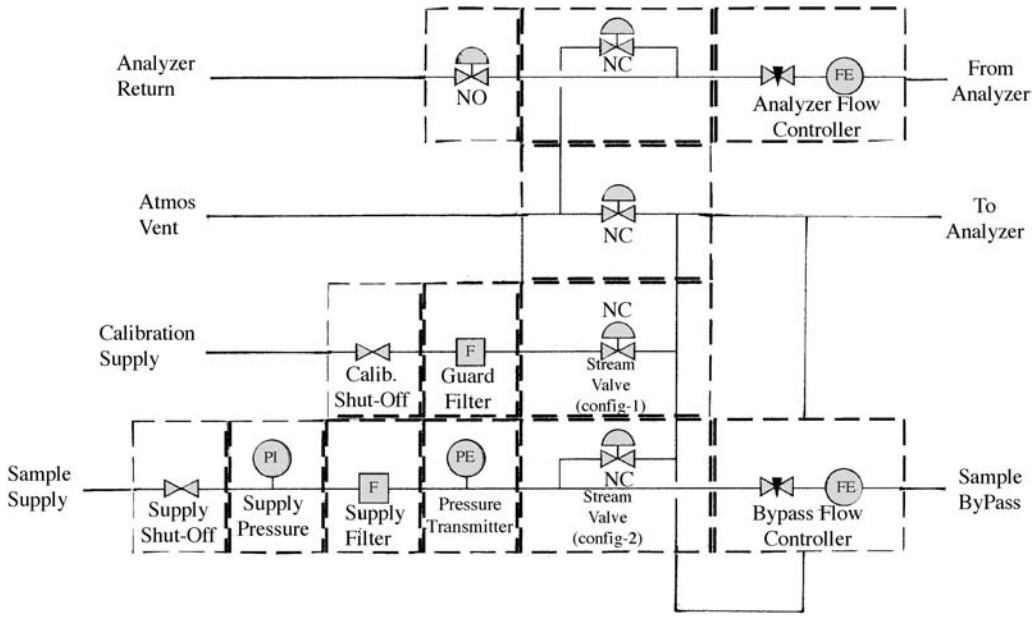

FIG. 8.12oo
Schematic of a simple SHS circuit for one process stream and a calibration sample. (From Goedert, M. and Guiochon, G., Journal of Chromatographic Science, 7, 323, 1969.)

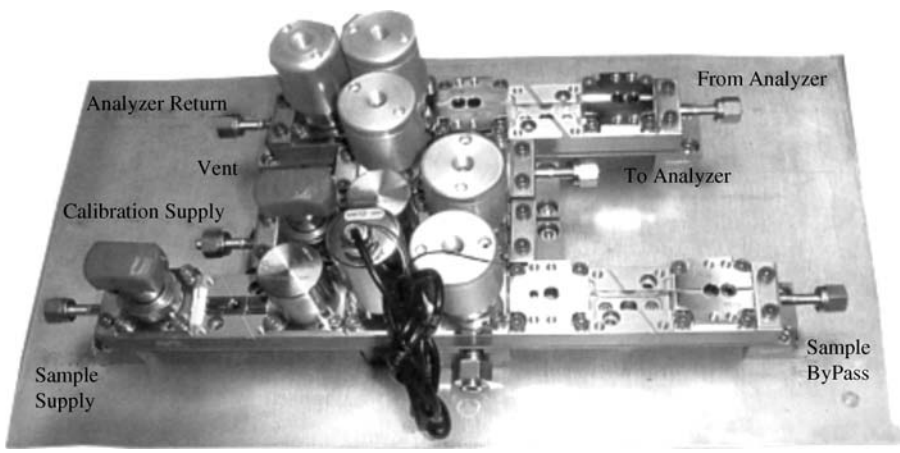

FIG. 8.12pp
Hardware implementation of the circuit shown in Figure 8.12oo minus the miniature flow controllers and the pressure indicator (guage). (From Goedert, M. and Guiochon, G., Journal of Chromatographic Science, 7, 323, 1969.)

practice in the industry as a way of justifying the cost of the PGC. It is questionable if the savings are real when one considers the increased complexity of the SHS/SCS (one for each stream) and the maintenance problems that are incurred. Add to this the fact that if the analyzer goes down, the analysis of more than one stream is affected—a result that may have more impact on product cost than purchasing separate analyzers. The availability of a lower installed cost PGC with its simpler modular SHS may affect a shift in this paradigm in the future.

In any case, stream switching requires a design that prevents mixing of the process stream samples. The double-block-and-bleed-with-bypass purge illustrated in Figure 8.12rr is probably the most efficient circuit for accomplishing this objective. In this circuit, all sample streams are flowing continuously, even in the unselected lines, thus ensuring up-to-date sample composition when selected. Sample stream 2 is selected in this case and continuously flushes the PGC sample loop and all other sample lines.

Sample Disposal

The vent of the PGC is almost totally carrier gas and is usually vented to the atmosphere, as is the sample loop vent line, unless the sample is toxic or otherwise environmentally harmful. In such cases, the sample must be vented to a specific waste disposal area. Alternatively, if a low-pressure point in the process stream is available, the sample can be returned to the process. Since the accuracy of the analysis is directly

© 2003 by Béla Lipták

TABLE 8.12qq
Minimum Process Sample Information Required for Proper SHS Design

Liquid	*Vapor*
Process pressure and temperature	Process pressure and temperature
Bubble point at the process or highest ambient temperature (whichever is highest) and atmospheric pressure	Dew point and lowest ambient temperature
Viscosity	Average molecular weight
Specific gravity	Specific gravity
Sample composition under normal and upset conditions	Sample composition under normal and upset conditions
Sample return point pressure	Sample return point pressure
Distance between sampling point and the analyzer	Distance between sampling point and the analyzer
Required sample turnaround time (lag time of the SHS/SCS)	Required sample turnaround time (lag time of the SHS/SCS)
Maximum pressure for which the PGC sample valve is specified	Maximum pressure for which the PGC sample valve is specified
Whether the PGC valve can accept either liquid or vapor sample	Whether the PGC valve can accept either liquid or vapor sample
Minimum flow rate required through the PGC sample loop	Minimum flow rate required through the PGC sample loop
Corrosiveness of the sample (related to material compatibility)	Corrosiveness of the sample (related to material compatibility)
Sample toxicity	Sample toxicity

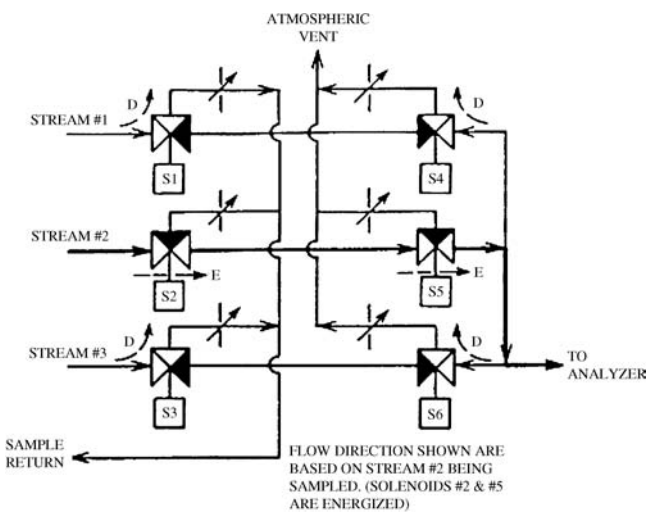

FIG. 8.12rr
Dual solenoid sampling system with block, bleed, and back purge.

affected by the pressure of the sample loop (unless one is using normalization procedures), provision must be made to either measure this pressure or provide hardware to maintain a constant pressure.

In summary, the SHS/SCS is a very important part of PGC hardware. Proper design and maintenance of this part of the system will ensure a large uptime for the analyzer.

There has been some attempt to utilize the micromachined type of GC that has been used with some success, in the laboratory and as portable GC devices, as the analyzer portion of a PGC.[23] The advantages of adopting such a design are, analytically, to achieve faster analysis and, engineering-wise, to design a smaller analyzer. Such a design puts an even greater burden on the SHS to provide an absolutely particle-free sample.

INSTALLATION

Typical utility provisions for PGCs are outlined in Table 8.12ss. Additional support services may be required, such as refrigerated or heated sample runs, an analyzer shelter, etc. As a result, installation costs account for the principal portion of a traditionally designed PGC system. One of the prime advantages offered by the PGC transmitter is a significant reduction in installation and operating costs. However, severe environmental conditions can prevail at many industrial locations that can have an impact not only on the instrument but also maintenance personnel. Thus, mounting the PGC in a walk-in environmentally controlled analyzer shelter may be necessary for the protection of maintenance personnel while they are working on the instrument.

A very approximate breakdown of these installation costs is given in Table 8.12tt. The difference between the installed transmitter cost and that of the traditional PGC may be more striking when one considers the cost of running heat-traced sample lines. However, one must not be misled by claims that in all cases the sample lines to a transmitter will be shorter since it will be mounted close to the sample point. Where the transmitter is mounted will always be a compromise between short sample lines and accessibility for maintenance purposes.

In addition, provision must be made for space to house the analyzer maintenance station. This unit may be located close by in a general-purpose area or located off-site and connected to the analyzer through a modem. Required gases (such as carrier gas, calibration gas, FID fuel, etc.) are stored as compressed gases in cylinders that should be placed in an easily accessible area outside, but fairly close to the analyzer shack.

© 2003 by Béla Lipták

TABLE 8.12ss
Typical Utility Requirement

Item	*Specification*
Instrument air	4 scfm per heated zone, 2 scfm purge
Instrument air quality	Clean, dry, –40°C dew point, oil free, particles ≤ 5 ppm microns, ISA grade hydrocarbon free
Carrier and other gases	Compressed gases, application dependent, may include helium, nitrogen, hydrogen, air, etc.
Compressed gas quality	Hydrogen, 99.995% ultra pure grade Burner air, ≤ 1 ppm hydrocarbons and ≤ 5 ppm water Helium, ≤ 99.995% ultra pure grade Nitrogen, 99.995% ultra pure grade
AC power	115 VAC, 50/60 Hz 10 amp service (per oven) or 220/230 VAC, 50/60 Hz

TABLE 8.12tt
Breakdown of Installation Costs

Item	*Traditional PGC*	*PGC Transmitter*
Analyzer with basic SHS	45,000	33,000
Analyzer shelter (1/4 pro rata)	35,000	NA
Installation and startup	20,000	5,000
Total*	100,000	38,000

* This is a minimum installation cost as each unit may require specific hardware/software depending on the specific PGC and the application.

Sample/Utility Connection Costs

Electrical	
1 in. conduit	$ 28/ft
2 in. conduit	$ 35/ft
Sample Lines	
Bare	$ 24/ft
Heated	$ 85/ft
Instrument Air	
1 in. carbon steel	
Steam Line (insulated 1.5 in.)	$ 30/ft

SUMMARY

Although the PGC is perhaps the most expensive of the commonly used process analyzers, it provides the compositional information that is required for tight quality control. The introduction of the truly field-mountable PGC with the remote diagnostic and maintenance procedures that involve one technician doing a quick field replacement of the designated module may lead to an even greater increase in the use of PGCs in process control applications.

Acknowledgment

The author thanks Stephen Staphanos of Rosemont Analytical and Robert Bade of Siemens/Applied Automation for their fruitful discussions concerning PGC design, and Peter Vanvuren of Exxon/Mobil and the Center for Analytical Process Control for information regarding modular SCS design.

References

1. For example, see ABB's models 8000/8100 BTU/CV Transmitters described at http://www.totalflow.com/Data%20Sheets/8000.htm.
2. Annino, R., Curren, J., Jr., Karas, E., Lindquist, R., and Prescott, R., *Journal of Chromatography,* 126, 301, 1976.
3. Annino, R., *Journal of Chromatography A,* 678, 279–288, 1994.
4. Smart Gas Chromatograph 3000, SL-53-364R (8M) 8/94, © Honeywell Inc.
5. Deans, D. R., *Journal of Chromatography,* 43, 43, 1984.
6. Maier, H. J. and Karpathy, O. C., *Journal of Chromatography,* 8, 308, 1962.

© 2003 by Béla Lipták

7. Hildebrand, G. P. and Reilly, C. M., *Analytical Chemistry*, 36 47, 1964.
8. Villalobos, R. and Annino, R., *JHRC*, 13 764, 1990.
9. Dandeneau, R. and Zerenner, E. H., *JHRC*, 2 351, 1979.
10. Rigaud, M., Chebroux, P., Durand, J., Maclouf, J., and Madini, C., *Tetrahedron*, 44, 3935, 1976.
11. Madini, C., Chambaz, E. M., Rignaud, M., Durand, J., and Chebroux, P., *Journal of Chromatography*, 126 161, 1976.
12. Sternberg, J. C., Gallaway, W. S., and Jones, D. T .L., in *Gas Chromatography*, Brenner, N., Callen, J. E., and Weiss, M. D., Eds., New York: Academic Press, 1962, p. 231.
13. Amirav, A. and Jing, H., *Anal. Chem.* 67(18), 3305, 1995.
14. Annino, R. and Voyksner, R., *Journal of Chromatography*, 142, 131, 1977.
15. Annino, R., Caffert, C., and Lewis, E., *Analytical Chemistry*, 58, 2516, 1986.
16. Goedert, M. and Guiochon, G., *Journal of Chromatographic Science*, 7, 323, 1969.
17. Fussell, E., "NeSSI (New Sample/Sensor Initiative) at CPAC Fall 1999 Meeting," *InTech*, September 19, 2001.
18. Dubois, R., VanVurreen, P., and Tatera, J., "Searching for Higher Ground: Unveiling NeSSI II," presented at IFPAC, San Diego, CA, January 23, 2002.
19. Mracek, K., "Fluid Components for Small, Smart, Sampling Systems," presented at 1999 Fall Meeting of CPAC, University of Washington, Seattle, WA, 1999.
20. Simko, D. M., "Miniature Modular Sample Systems: From Concept to Reality," Program Session 238, User-Manufacturer Exchange, presented at PittCon 2002, March 20, 2002.
21. Doe, S., "Surface Mount Technology for Sample Conditioning Systems," Program Session 238, User-Manufacturer Exchange, presented at PittCon 2002, March 20, 2002.
22. Cumbus, J., "Application of Smart Modular Sample Systems at an Olefins Plant," presented at IFPAC, San Diego, CA, March 17–22, 2002.
23. For example, see the µPGC 100 offered by SRA Instruments, www.sra-instruments.com/ANGLAIS/adt2.htm.

Bibliography

Annino, R. and Villalobos, R., *Process Gas Chromatography: Fundamentals and Applications*, Research Triangle Park, NC: ISA, 1992.

Center for Process Analytical Chemistry, http://www.cpac.washington.edu.

Clevett, K. J., *Process Analyzer Technology*, New York: John Wiley & Sons, 1986.

Cornish, D. C., Jepson, G., and Smurthwaite, M. J., *Sampling Systems for Process Analyzers*, London: Butterworth.

Dubois, R., van Vuuren, P., and Tatera, J., "New Sampling Sensor Initiative:" An Enabling Technology, 47th Annual ISA Analysis Division Symposium, Denver, CO, April 14–18, 2002.

Fieldbus Tutorial, www.ta.eng.com/industry/mforum/tbtut/tbtut1.htm.

Foundation Fieldbus-Frequently-Asked-Question, www.fieldbus.org/About/FAQ/Answers.

Fussell, E., "An Open Discussion on the Future of Fieldbus," *InTech*, September 10, 2001.

Guiochon, G. and Guillemin, C. L., *Quantitative Gas Chromatography*, Amsterdam: Elsevier, 1988.

Houser, E. A., *Principles of Sample Handling System Design*, Research Triangle Park, NC: ISA, 1977.

Huskins, D. J., *General Handbook of On-Line Process Analyzers*, Chichester, U.K.: Ellis Horwood.

McMahon, T. K., "The New Sampling/Sensor Initiative," *Control*, August 2001.

Meyers, R. A., Ed., *Encyclopedia of Analytical Chemistry: Instrumentation and Applications*, New York: John Wiley & Sons, 2000.

Sherman, R. E., *Process Analyzer Sample-Conditioning System Technology*, New York: John Wiley & Sons, 2002.

Thomson, M., "Interfacing Sample Handling Systems for On-Line Process Analyzers," www.measurementation.com.au/tp-1.htm, January 14, 2002.

Van den Berg, F. W. J., Hoefsloot, H. C. J., and Smilde, A. K., "Selection of Optimal Process Analyzers for Plant-Wide Monitoring," *Analytical Chemistry*, 74(3), 3105–3111, 2002.

Verhappen, I., "The Basics of Analyzer Sample Systems," *InTech*, May 20, 1999.

Villalobos, R., "Process Gas Chromatography," *Analytical Chemistry*, 47(11), 983A, 1975.

© 2003 by Béla Lipták

8.13 Chromatographs: Liquid

L. P. ROOF (1982) **B. G. LIPTÁK** (1995, 2003)

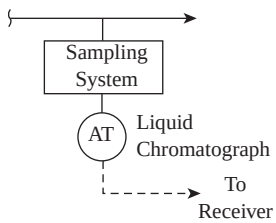

Flow Sheet Symbol

Types:	Laboratory: thin-layer and paper chromatography
Column:	Liquid–solid absorption, liquid–liquid partition, gel permeation (exclusion), and ion exchange
Detectors:	Fiber-optic probes, differential refractive index, fixed- or variable-wavelength ultraviolet, dielectric constant, electrical conductivity
Type of Sample:	Liquid
Sample Pressure:	5 to 1000 PSIG (35 to 7000 kPa)
Sample Temperature:	60 to 300°F (16 to 149°C)
Ambient Temperature:	0 to 122°F (−18 to 50°C)
Contacting Materials:	Stainless steel, Teflon standard; all conventional materials available
Utilities Required:	Electrical power, carrier solvent, air at 100 PSI (700 kPa)
Repeatability:	±0.5% for most applications
Cycle Time:	3 to 20 min for most applications
Special Features:	Multicomponent readout, molecular weight readout
Costs:	Laboratory system component costs: HPLC columns cost from $300 to $1800; solvent delivery pumps range from $2000 to $5000; fixed-wavelength ultraviolet–visible (UV-VIS) detectors cost $2500; variable-wavelength ones are about $5000; microprocessor-based data acquisition integrator costs about $3000. Complete process HPLC units cost about $50,000, and their installed cost is about $100,000.
Partial List of Suppliers:	Beckman Coulter (www.beckman.com) Gynkotek HPLC Inc. (www.gynkotek.com) Hewlett Packard (www.hp.com) HPLC Technology Co. (www.hplc.co.uk) Regis Technologies Inc. (www.registech.com) Rohm Haas (www.rhcis.com) Siemens Energy & Automation (www.sea.siemens.com) Thomson Instrument (www.hplc1.com) Waters Corp. (www.waters.com)

INTRODUCTION

For the types of process samples that cannot be easily vaporized, the liquid chromatograph can be considered. In a liquid chromatograph column, the stationary phase can consist of a finely powdered solid adsorbent packed into a thin metal column, and the mobile phase can be an eluting solvent that is forced through the column by a high-pressure pump.

The mixture to be analyzed is injected into the column inlet and, after separation in the column, it is monitored at the

© 2003 by Béla Lipták

exit by a variety of detectors. A wide variety of liquid chromatograph packings, eluting solvents, and detectors are available. Their combinations are selected to obtain the desired resolution.

COMPARISON WITH GAS CHROMATOGRAPHS

In many ways the liquid chromatograph is similar to the gas chromatograph. The basic difference is that the carrier is a liquid instead of a gas. All the other changes in the instrumentation used result from this difference. In fact, the only components that are significantly different are the components, that are in direct contact with the carrier solvent. These components will be discussed here.

Section 8.12 described the gas chromatograph and should be referred to for a basic understanding of the operation of chromatographs.

Carrier Flow

A typical carrier flow diagram of the liquid chromatograph is illustrated in Figure 8.13a. The sample valve injects a measured volume of sample into the controlled flow of carrier liquid, which transports it through the columns and into the detector. Interaction between the stationary column-packing material and the flowing liquid carrier causes the sample components of interest to move through the column at different velocities, providing the separation. For each sample component, the detector provides an electrical signal proportional to its concentration in the carrier. The electrical signal is recorded as a chromatogram or otherwise displayed in any of the standard chromatographic forms.

The Main Components

The instrument construction is similar to that of the gas chromatograph. The liquid chromatograph is divided into two parts: the analysis section and the control section. The analysis section is located near the process stream and is often contained in an instrument house. This section includes 1) the chromatographic oven containing the valves, columns, and detector; 2) the carrier supply; 3) an electronics compartment containing the circuitry for the detector, temperature control, valve operators, and local data handling; and 4) the sample preparation system, which may be in a separate temperature-controlled oven.

The control section is often located in the control room and includes the programmer to control the instrument and process the data, and the data display, which may include a strip-chart recorder, a digital display, or a digital computer for further data processing. The programmer discussed here includes stream selection, which may be a physically separate unit.

However, the liquid chromatograph operating conditions are different from those of the gas chromatograph. In particular, the carrier pressure is typically 1000 PSIG (7 MPa) at a flow rate of 1 ml/min, and the chromatographic cycle time is typically 3 to 20 min.

HPLC COLUMN SELECTIVITY AND RESOLUTION

As the constituents of interest pass through high-pressure liquid chromatograph (HPLC) columns, they are retarded due to the selective absorption or adsorption effects of the column packing. The more efficient a column, the more able it is to produce narrow peak bands during the elution of the sample.

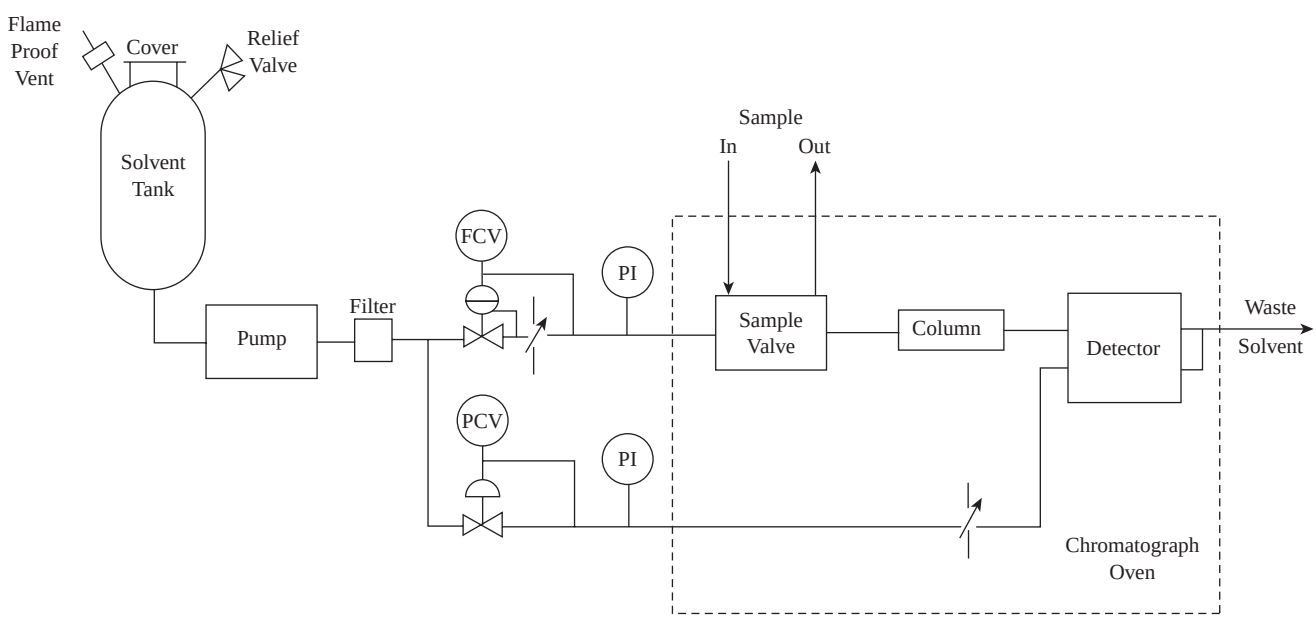

FIG. 8.13a
Carrier flow diagram of the liquid chromatograph.

© 2003 by Béla Lipták

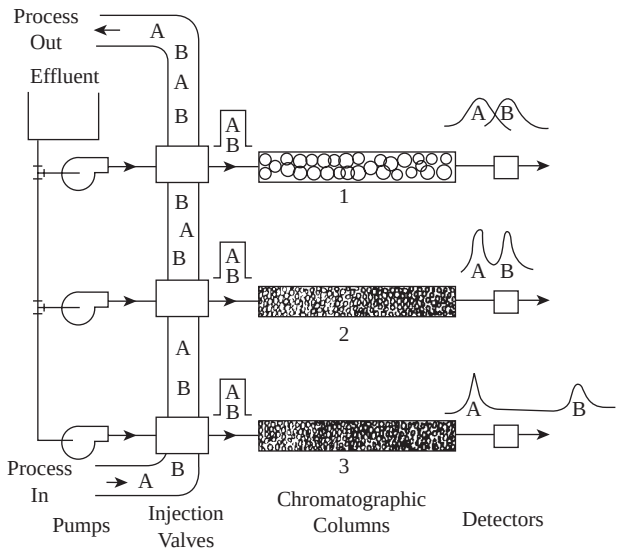

FIG. 8.13b
Relative efficiency, selectivity, and resolution of chromatographic columns.[1]

TABLE 8.13c
Selectivity Coefficient Names Used in Case of Different Columns

Column Type	*Name Used for Selectivity Coefficient*
Liquid–solid adsorption	Adsorption
Liquid–liquid partition	Partition
Gel permeation (exclusion)	Permeation
Ion exchange	Distribution

For example, column 1 in Figure 8.13b is inefficient, while columns 2 and 3 are efficient. Although the efficiencies of columns 2 and 3 are similar, their selectivities—the relative affinity of the sample constituents for the packing—are different, and the selectivity of column 3 is better, or higher.

The coefficient, which expresses selectivity (Table 8.13c), is called by different names as a function of the type of column used. Selectivity can be improved by increasing column size or by raising the ratio of distribution factors. The combined effect of efficiency and selectivity is called resolution. In Figure 8.13a, the resolution of column 3 is the best. Unfortunately, the steps that will improve resolution (smaller tubing diameter, smaller injection volume, finer packing, larger or multiple columns) also tend to extend analysis time and decrease downtime and maintenance due to plugging.

CARRIER SUPPLY

The carrier supply is made up of 1) the liquid carrier, 2) a reservoir to hold it, 3) a carrier pump, 4) pressure and flow controls, and 5) a filter and gauges. The carrier is either a single-component solvent or a blend of solvents. The selection and uniformity of solvents and solvent blends are critical to the liquid chromatograph, affecting both component separation and detector response.

A typical carrier reservoir is a 15-gal (57-1) stainless steel tank equipped with a flame-proof vent and a relief valve for flammable solvents. Some solvents are affected by oxygen or moisture in the air, and an inert gas, such as nitrogen, is either bubbled through or blanketed over the carrier in the tank.

Supply Pumps

There are two types of carrier pumps: air-driven and motor-driven. Both are reciprocating pumps containing check valves to divert the liquid through the pump. Air-driven pumps are powered by a large-diameter air piston, which is connected to a small-diameter liquid piston. The pump recycles at the end of each stroke. The air-driven pump provides a pressure, relatively independent of flow, that is nominally some multiple of the air pressure.

Motor-driven pumps are powered with an electric motor connected to an eccentric that drives one or more liquid pistons. The motor-driven pump provides a flow, relatively independent of pressure, that is controlled by motor speed or piston stroke length.

Pressure and Flow Controls

Pressure and flow control depend on the type of pump used. Air-driven pumps provide a pressure that is reduced to the desired value with a diaphragm pressure regulator. Flow control is provided with a diaphragm-type differential pressure regulator that controls a preset pressure difference across a fixed restriction.

This system has the advantages of flexibility and of providing a continuous, not pulsating, flow, but requires numerous components. Carrier control with motor-driven pumps is generally limited to flow control. Two flow control methods are in use. The first option is to manually set the motor speed or pump stroke to the desired flow. This has the advantage of simplicity, but the quality of control is often insufficient. If automatic, closed-loop control is provided; the quality of control is improved, but the system becomes more complex and expensive.

Valves

Liquid chromatographic valves operate on the same principles as gas chromatographic valves. The air-operated diaphragm valves, plug valves, and rotary valves discussed in Section 8.12 are also used. These valves are strengthened and use higher seal forces due to the high operating pressures. They also have smaller internal flow passage to reduce sample–carrier mixing in the valve.

© 2003 by Béla Lipták

COLUMNS

Liquid columns are packed in a $\frac{1}{4}$- or $\frac{3}{8}$-in. (6- or 9.6-mm) -outer-diameter straight stainless steel tube 2 to 12 in. (50 to 305 mm) long. The total column length in an instrument rarely exceeds 4 ft (1.2 m) and is more often 1 ft (0.3 m) or less. The columns are filled with particulate packing that is typically in the 5- to 10- micron range. There are four types of liquid columns classified by the principle of separation that is utilized in them: liquid–liquid columns, liquid–solid columns, size exclusion columns, and ion exchange columns. Table 8.13d lists a few typical column applications.

Liquid–Partition Columns

Liquid–liquid columns (liquid–partition columns) are filled with solid support, usually silica, coated with a liquid stationary phase. To prevent loss of the liquid, it is usually chemically bonded to the support. The separation depends on the relative solubility of the sample components in the stationary and mobile, or carrier, phases.

Liquid–liquid separations are subdivided into normal and reverse phase separations. In normal phase separation, the stationary phase is more polar (in the chromatographic sense, not dipole moment) than the mobile phase. While in reverse phase separation, the stationary phase is less polar than the mobile phase. When sample components can be separated with either type, the components elute from the column in reverse order when changing from the normal to the reverse phase.

TABLE 8.13d
Typical Column Applications

Column Type	*Applications*
Liquid–liquid, normal phase	Phenols Esters Pigments Cooking oils
Liquid–liquid, reverse phase	Pesticides Herbicides Organic aromatics Water pollutants
Liquid–solid	Plasticizers Antioxidants Organic acids Water pollutants
Size exclusion	Polymers Resins Carbohydrates Hydrocarbons
Ion exchange	Inorganic ions Dies Detergents Sugars

To improve separation, the binary mixture of solvents can be changed in the carrier. This is called solvent programming or gradient elution and is comparable to temperature programming in gas chromatography. Its use is limited almost exclusively to laboratory analysis.

Liquid–Adsorption Columns

In this case, the liquid–solid columns (liquid–adsorption columns) are filled with an adsorbent. Silica is the most common, but alumina and even charcoal are also used occasionally. Separation occurs as the sample components are retained by the adsorption sites on the packing. The mobile phase competes with the sample for adsorption sites and displaces the sample so it can move through the column. As with liquid–liquid columns, the mobile phase is chosen or blended to provide the desired separation of sample components. Solvent programming can also be used.

Gel–Permeation Columns

In gel-permeation chromatography, sample components are separated on the basis of their molecular size. Large molecules move straight down the column, while small molecules stick in the pores of the porous beads of the gel and are retarded.

Size exclusion columns (steric exclusion columns or gel-permeation columns) are filled with a porous solid, such as silica, or a porous polymer, such as cross-linked polystyrene (Figure 8.13e). The pore size in the column varies uniformly over a specific range, for example, 300 to 600 Å.

While moving through the column in the mobile phase, a sample component with a chain length (or more correctly, hydrodynamic volume) of 400 Å can diffuse into any of the pores that are 400 Å and larger. On the other hand, a sample component with a chain length of 500 Å can diffuse into only

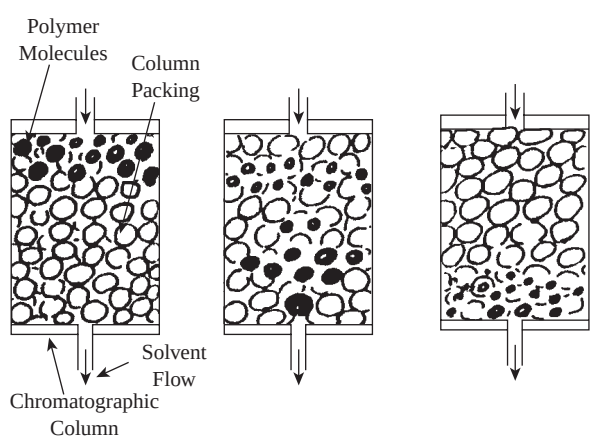

FIG. 8.13e
Three stages in the chromatographic separation of polymers: (left) at sample injection; (center) during separation; (right) at sample elution.

© 2003 by Béla Lipták

those pores 500 Å and larger. Since it enters fewer of the stationary pores, the 500 Å component moves through the column faster than the 400 Å component. Thus, long-chain or high-molecular-weight compounds elute from the column first. The mobile phase has no direct effect on the separation process in the columns.

Ion Exchange Columns

For process samples containing ions, ion-exchange chromatography can be used. These columns can be packed with ion-exchange resins, which contain exchangeable ions and therefore can separate the ions in the process sample from the neutral or oppositely charged components.

Ion exchange columns are filled with a cross-linked polystyrene resin containing charge-bearing functional groups on its surface. The stationary phase is called anion exchange if the functional groups are positively charged, and cation exchange if negatively charged. For the sample ions to be retained, they must be of opposite charge to the functional groups. The mobile phase is generally water containing a fixed quantity of ions of the same charge as the sample and buffered to a specific pH. The sample ions are separated, depending on how strongly they interact with the functional groups on the stationary phase in competition with the ions in the mobile phase. The quantity, the type of ion, and the pH in the mobile phase control the separation.

Electrophoresis

Mixtures of ions can also be analyzed by using a column of polymeric gel, which is saturated with an electrolyte. In this case, the sample to be analyzed is spotted onto the gel and two electrodes are connected (5000 V), which cause the migration of positive ions toward one and the negative ones toward the other. This method is used in analyzing mixtures of proteins.

DETECTORS

All detectors used in the liquid chromatograph are simplified, small internal-volume versions of other analyzers. The most common ones are based on the measurement of optical absorbance, refractive index, or the dielectric constant.

Optical Absorbance

The optical absorbance detector measures the absorption of a fixed wavelength in the ultraviolet or visible spectrum. It is highly sensitive to many absorbing sample compounds and relatively insensitive to external effects, such as temperature, flow, and carrier composition. It can only measure absorbing compounds in a nonabsorbing carrier.

Refractive Index

The refractive index detector measures the difference between the refractive index of the sample compounds and the carrier. With the proper choice of carrier, it is sensitive to all sample compounds, but the sensitivity is generally lower than that of the optical absorbance detector. It is also quite sensitive to temperature and carrier composition variations.

Dielectric Constant

The dielectric constant detector measures the difference between the dielectric, constants of the sample compounds and the carrier. Because, for compounds with no dipole moment, refractive index and dielectric constant are related, the advantages and disadvantages of this detector and the refractive index detector are similar. However, if, for example, the sample compounds have a dipole moment and the carrier does not, the dielectric constant detector has a higher sensitivity and more uniform response than the refractive index detector.

APPLICATIONS

The liquid chromatograph extends the advantages of the chromatograph to nonvolatile and thermally unstable samples, as well as polymers and inorganic salts. The prime advantages are the ability to both qualitatively and quantitatively analyze multicomponent streams with the versatility to analyze a wide range of samples.

When other instruments provide a satisfactory analysis, the liquid chromatograph is rarely used because it is more complex, more expensive, and sometimes less sensitive, and it requires a longer analysis time. However, there are many sample streams that can be analyzed satisfactorily only with the liquid chromatograph.

Reference

1. Miller, T. E., "Process Liquid Chromatography: The Next Step in On-Stream Analysis," *InTech,* September 1981.

Bibliography

Ahuja, S., *Selectivity and Detectability Optimizations in HPLC*, New York: John Wiley & Sons, 1989.

Covey, T., "Liquid Chromatography/Mass Spectrometry for the Analysis of Protein Digests," *Methods of Molecular Biology,* 61: 83–99, 1996.

Dolan, J. W. and Snyder, L. R., *Troubleshooting Liquid Chromatography Systems*, Totwa, NJ: Humana Press, 1989.

Dubois, R., van Vuuren, P., and Tatera, J., "New Sampling Sensor Initiative": An Enabling Technology, 47th Annual ISA Analysis Division Symposium, Denver, CO, April 14–18, 2002.

Fussell, E., "Molding the Future of Process Analytical Sampling," *InTech,* August 2001, 32.

Gjerde, D. et al., *Ion Chromatography,* Berlin: Springer-Verlag, 1987.

© 2003 by Béla Lipták

Guillemin, C. L., "Process Liquid Chromatography: Promises and Problems," *InTech*, August 1982.

Jutila, J. M., "Guide to Selecting Gas and Liquid Chromatographs," *InTech*, August 1980.

Kenkel, J., *Analytical Chemistry for Technicians*, Chelsea, MI: Lewis Publishers, 1988.

Lindsay, S., *High Performance Liquid Chromatography* (Analytical Chemistry by Open Learning Series), 1992.

Mehl, J. T., Nicola, A. J., et al., "Direct Coupling of Thin-Layer Chromatography with Matrix-Assisted Laser Desorption/Ionization Mass Spectrometry," *American Laboratory*, 30–38, 1998.

Meyers, R. A., Ed., *Encyclopedia of Analytical Chemistry: Instrumentation and Applications*, New York, John Wiley & Sons, 2000.

Miller, T. E., "Sample System for Automated Liquid Chromatography," *Industrial Research & Development*, August 1980.

Mowery, R. A., "Process Liquid Chromatography," in *Automated Stream Analysis for Process Control*, New York: Academic Press, 1982.

Niessen, W., *Liquid Chromatography–Mass Spectrometry* (Chromatographic Science), Vol. 79, 1998.

Pasch, H. and Trathnigg, B., *HPLC of Polymers* (Springer Laboratory), 1998.

Sherman, R. E., *Process Analyzer Sample-Conditioning System Technology*, New York, John Wiley & Sons, 2002.

Snyder, L. R. et al., *Practical HPLC Method Development*, New York: John Wiley & Sons, 1988.

Thomson, M., "Interfacing Sample Handling Systems for On-Line Process Analyzers," www.measurementation.com.au/tp-1.htm, January 14, 2002.

Uwe, D. N. et al., *HPLC Columns: Theory, Technology, and Practice*, 1997.

© 2003 by Béla Lipták

8.14 Coal Analyzers

D. H. F. LIU (1995) **B. G. LIPTÁK** (2003)

Types:	Thermogravimetry (TG), oxygen combustion bomb, total sulfur analysis, x-ray fluorescence (XRF), atomic absorption spectrophotometry (AA), coal slurry analyzers, prompt gamma neutron activation analyzers (PGNAAs), and the pulsed neutron type
Precision of Measurements:	Heating value, ±200 to 300 BTU/lb; ash content, ±0.05 wt%; and moisture content, ±0.05 wt% moisture
Partial List of Suppliers:	Fisher Scientific (www.fisher.co.uk) Gammametrics/Thermo Electron (www.gammametrics.com) Kanawha Scales (www.kanawhascales.com) Leco Corp. (www.leco.com) Parr Instrument Co. (www.parrinst.com) Science Applications Inc. (www.saic.com)

INTRODUCTION

Coal is widely used as a source of power and heat by the chemical, paper, cement, and metal industries. In the U.S., there are some 900 coal preparation plants and coal-fired power plants, and some 100 coal analyzers have already been installed in them. One key consideration in operating coal-burning facilities is the control of SO_2 emissions to the atmosphere from coal-fired power plants. Because the most economical method of reducing the sulfur content of coal is through the blending of various coals, on-line coal analyzers are often needed. The characteristics of coal are monitored for environmental protection, quality assurance, and process control.

This section will describe the instrumental methods for:

1. Proximate analysis: Used to establish the rank of coals, to show the ratio of combustible to incombustible constituents, to provide the basis for buying and selling, to evaluate the benefits, or for other purposes
2. Gross calorific value: Provides the basis for buying and selling
3. Sulfur analysis: Used in coal preparation and in the determination of potential sulfur emissions from coal combustion or conversion processes, or in the determination of coal quality against contract specifications
4. Composition analysis of major and minor elements in coal and coke ash: Predicts slagging and fouling characteristics of combusted materials and potential use of ash by-products (see American Society for Testing Materials (ASTM) Standards D346 and D2013 on methods for collection and preparation of coal samples for laboratory analysis)

The various methods for the on-line monitoring of coal streams are described in the paragraphs that follow.

THERMOGRAVIMETRY

Due to the recent addition of microcomputer control and dedicated data reduction, the thermogravimetry (TG) technique has become popular for routine approximate analysis of coal and coal products. The TG unit performs a multistep analytical sequence automatically and unattended.

The sample is loaded into a two-arm furnace tube (Figure 8.14a) and is sequentially dried and burned; the residue is then weighed. The tube allows the active gas (air or oxygen) to enter near the top of the furnace rather than through the balance mechanism. The low-mass furnace provides both rapid heating rates and a short cooldown time. The microcomputer controller provides automatic switching between the purge gas and the active gas.

Bituminous Coal Analysis

Figure 8.14b shows a typical proximate analysis of a bituminous coal using the automated TG system. The furnace is heated to 230°F (110°C) at a rate of 140°F/min (60°C/min) and is held isothermally for 5 min while water is vaporized off from the coal sample. The furnace is then heated at a rate

© 2003 by Béla Lipták

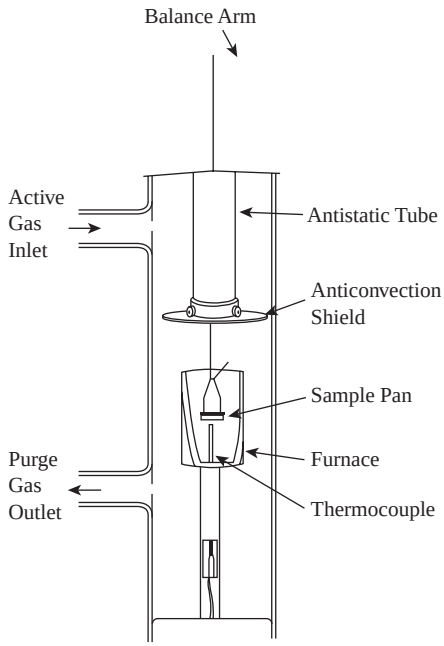

FIG. 8.14a

Two-arm furnace tube for active gas introduction in the microcomputer-controlled thermogravimetry of coal and coal products. (Courtesy of the Perkin-Elmer Corp.)

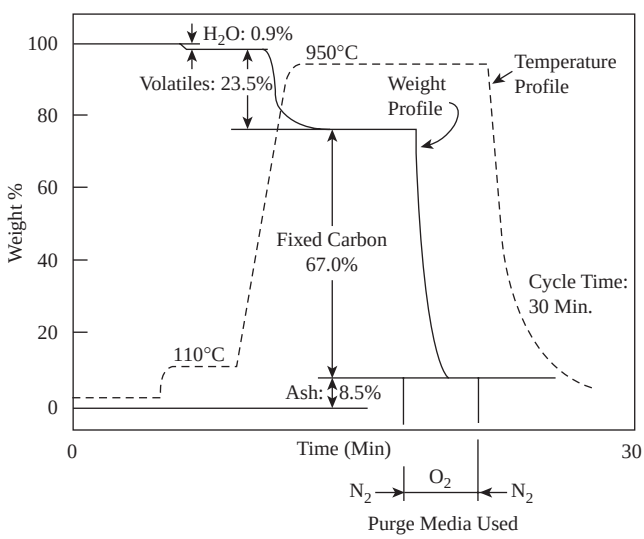

Fig. 8.14b

A typical proximate analysis of coal by microcomputer-controlled thermogravimetry.

of 176°F/min (80°C/min) to 1742°F (950°C) and held for 7 min while nitrogen is flowing through the TG, until all volatile matter is expelled from the sample. After the nitrogen purge, the purge gas is switched to either air or oxygen and the fixed carbon content of the char is oxidized, leaving the ash content as the residue.

The values from these determinations are read directly in weight percent from the chart recorder. The air or oxygen purge is switched back to nitrogen, and the system automatically cools back to load temperature. The elapsed time of the proximate analysis program and cooling of the tube back to load temperature totals 30 min.

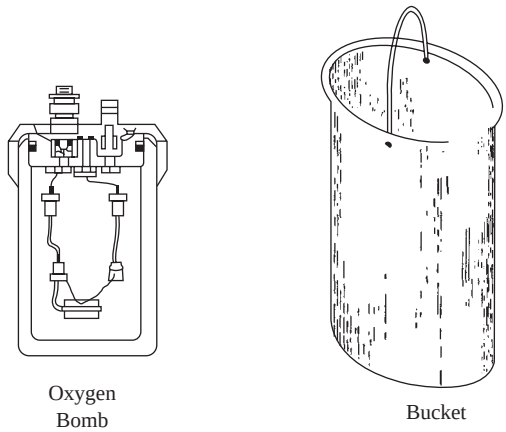

FIG. 8.14c

Oxygen combustion bomb and bucket used in the isoperibol calorimetry. (Courtesy of Parr Instrument Co.)

GROSS CALORIFIC VALUE

Gross calorific value is determined by burning a weighed sample of coal. A calibrated isoperibol oxygen bomb calorimeter is used for that purpose under controlled conditions (Figure 8.14c).

The bucket, which holds the oxygen bomb, provides good circulation and rapid thermal equilibrium for the bomb. Thermal jacketing is provided by a circulating water system, which maintains cooling water flow around the bucket. A microprocessor control system monitors and controls the jacket temperature, fires the bomb, and monitors the temperature in the bucket. The test continues until the controller determines that equilibrium has been reached.

A microcomputer uses the sample weight and temperature data—applying correction for acid, sulfur, fuse, and any added combustion aids—to calculate the gross calorific value.

TOTAL SULFUR ANALYSIS

An ASTM method for determining sulfur in coal uses the washings from the oxygen bomb calorimeter. Sulfur is precipitated as barium sulfate from the washings. The precipitate is filtered, ashed, and weighed. An automatic titrimetric system is also available for rapid sulfur determination using the oxygen bomb washings. The washings are titrated with a lead perchlorate solution to obtain a lead precipitate. The titration takes place in a nonaqueous medium to ensure complete precipitation and a sharp end point with a lead ion-selective electrode.

© 2003 by Béla Lipták

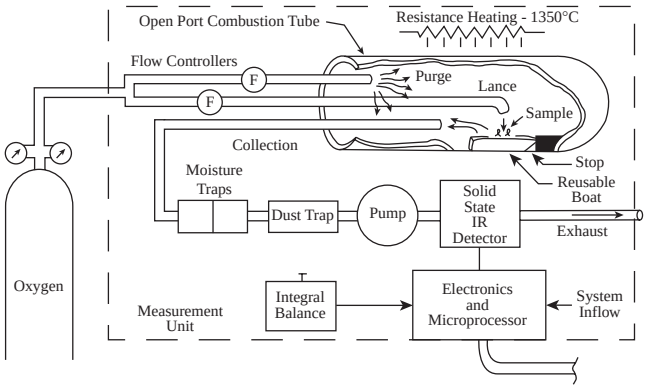

FIG. 8.14d
Apparatus for the determination of sulfur by the infrared detection method.

Other procedures use high-temperature tube furnace combustion methods for rapid determination of sulfur in coal and coke using automated equipment. The instrumental analysis provides a reliable and rapid method for determining sulfur contents of coal or coke.

Figure 8.14d illustrates the high-temperature combustion method of sulfur detection using infrared absorption detection procedures. The sample is burned in a tube furnace at a minimum operating temperature of 1350°C (2462°F) in a stream of oxygen to oxidize the sulfur.

Moisture and particulate matter are removed from the gas by traps filled with magnesium perchlorate. Sulfur dioxide is measured, using an infrared absorption detector. Sulfur dioxide absorbs infrared energy at a precisely known wavelength within the infrared spectrum. Total sulfur as sulfur dioxide is determined on a continuous basis.

ASH ANALYSIS

The major or minor elements in coal ash can be determined using x-ray fluorescence (XRF) techniques. The ash is fused with lithium tetraborate or other suitable flux and either ground or pressed into a glass disk. After that, the pellet or disk is irradiated, using an x-ray beam of short wavelength (high energy).

The characteristic x-rays of the atom that are emitted or fluoresced upon receiving the primary rays are dispersed, and their intensities are measured at selected wavelengths by sensitive detectors. Detector output is converted into concentration by computerized data-handling equipment. All elements are determined and are reported as oxides. They include Fe, Ca, K, Al, Si, P, Mg, Ti, and Na.

These major and minor elements can also be determined by atomic absorption spectrophotometry (AA). See Section 8.22 for a more detailed description of XRF and AA.

ON-LINE MONITORS

Figure 8.14e shows a schematic of a continuous monitor of moisture, ash, and BTU in coal. In this system, a microwave analyzer measures the moisture content of the coal, without requiring physical contact with the solids. (See Section 8.34 for an explanation of the principles of a microwave absorption hygrometer.)

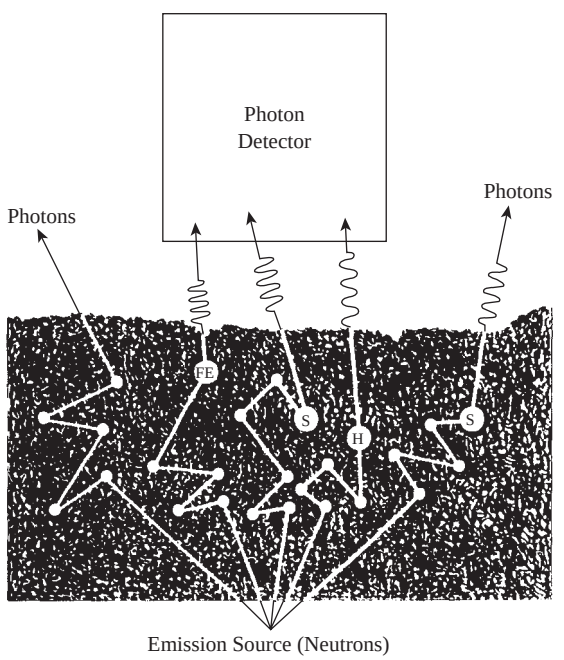

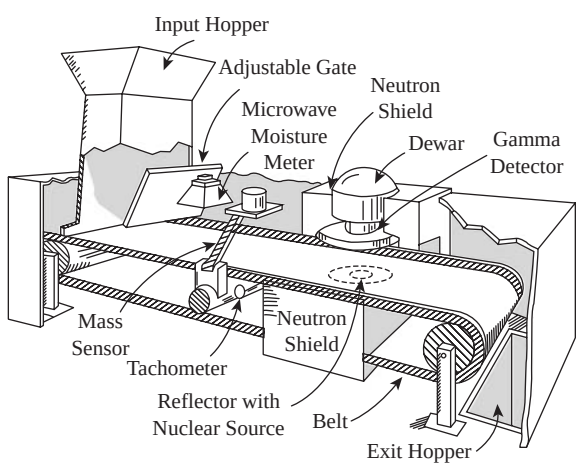

FIG. 8.14e
Coal analyzer. (Courtesy of Science Applications Inc.)

© 2003 by Béla Lipták

The *fingerprint* of a given type of coal is its distinctive gamma spectrogram. This is produced by the detection and counting of photons released from atomic nuclei in the coal as it passes over a small source of neutron emissions. The precision of the measurements of heating value, ash, and moisture content varies with the type of coal, typically 200 to 300 BTU/lb, 0.05 wt% ash, and 0.05 wt% moisture.

Gamma-Based Analyzers

The Harwell spectrometer is used in the prompt gamma neutron activation analysis (PGNAA) in-line coal analyzer.[1] This package also measures coal density and moisture content. This multiple detector package also includes a feed hopper to direct the coal into the analyzer and a discharge conveyor, which takes away the coal under variable speed control. The system also includes an RS422–RS232 interface and remote displays for reporting the readings made by the analyzer.

An analyzer is also available for determining the ash and solids contents of coal–water mixtures or coal slurries.[2] This analysis is made by the use of three probes, which are immersed into the coal slurry stream. The ash probe uses a source of low-energy x-rays to measure not only the ash content, but also the concentration of iron. The density probe used gamma rays to detect the percent solids (slurry density) of the mixture. The low-intensity neutron source in the aeration probe detects the amount of air in the slurry, so that the density measurement can be corrected for aeration effects.

Recent Developments

Western Kentucky University is developing a prototype coal analyzer operated with microsecond-wide 14-MeV neutron pulses and containing several gamma ray detectors. This analyzer measures the density and sulfur content of coal along with its BTU, moisture, and volatile matter content. This pulsed fast/thermal neutron analyzer is self-calibrating and provides improved accuracy in the determination of elements such as carbon, oxygen, and sodium. If you want to follow this developmental effort, refer to Reference 3.

References

1. www.kanawhascales.com/CoalScan/9500/9500.htm
2. www.gammametrics.com/gmm2/GMMcsa.html
3. A prototype elemental coal analyzer based on pulsed neutrons, www.wku.edu/Dept/Academic/Ogden/Phyast/API/research/coal.htm

Bibliography

ASTM standards on coat testing, sampling, and analysis, American Society for Testing and Materials, West Conshohocken, PA, www.astn.rog/.

Baur, P. S., "Control Coal Quality through Blending," *Power*, March 1981.

Brown, D. R., "Coal BTU Measurement Study: Monitoring of Moisture in Coal," Research Project 983–1, Vol. 5, Electric Power Research Institute, Palo Alto, CA, 1979.

Brown, D. R., Gozani, T., and Bozorgmanesh, H., "Nucoalyzer On-Line Nuclear Analysis of Coal," 1980 Coal Technology, Houston, TX, November 1980.

Buckler, R. J., "Nuclear Assay of Coal," Research Project 983–1, Vol. 8, Electric Power Research Institute, Palo Alto, CA, January 1979.

"Coal Analyzer Determines Sulfur Content On-Line," *Power*, September 1980.

Cooper, H. R., *On-Stream X-Ray Analysis*, A.M. Gaudin Memorial, Vol. 2, Fuerstenau, M.C., Ed., New York: American Institute of Mining, Metallurgical, and Petroleum Engineers, 1976, pp. 865–894.

Cooper, H. R., "Using On-Stream X-Ray Fluorescence," *InTech*, July 1981.

Gleit, A., *Coal Sampling and Analysis*, Westwood, NJ: Noyes Publications, 1986.

Gozani, T., et al., "Nuclear Assay of Coal," Research Project 983–1, Vols. 1–8, Electric Power Research Institute, Palo Alto, CA, April 1980.

Gozani, T., Hogg, R., and Luckie, P., "Coal Rheology and Its Impact on Nuclear Assay," Research Report 983–1, Vol. 7, Electric Power Research Institute, Palo Alto, CA, April 1980.

Harrison, J. W., "Coal Sampling Systems and Quality Control," Coal Technology 80, Vol. 4, Houston, TX, November 18–20, 1980.

Kiuru, E. S., "A New Instrument for Accurate On-Stream XRF Measurement," PROMECON '81: Proceedings of the Process Measurement and Control Conference, Instrument Society of America, Research Triangle Park, NC, 1981.

"Overview of Coral Conversion Process Instrumentation," Report ANL-FE-49628-TM01, Argonne National Lab, Argonne, IL, May 1980.

"Reading the Composition of Coal," *EPRI Journal*, July/August 1980.

Subramanian, T. K., "How to Calculate BTU Values of Coal," in *Cool Age Operating Handbook of Preparation*, Vol. 3., Merrit, P. C., Ed., New York: McGraw-Hill.

Yeager, K., "Nuclear Analysis of Coal," *EPRI Journal*, June 1981.

© 2003 by Béla Lipták

8.15 Colorimeters

J. E. BROWN (1969, 1982) **B. G. LIPTÁK** (1995) **M. W. REED** (2003)

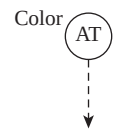

Flow Sheet Symbol

Types:	Spectrophotometers and colorimeters (one-dimensional and tristimulus)
Types of Samples:	Liquid, gas, or solid
Wavelength Ranges:	200 to 1000 nm is typical
Spectral Resolution:	2 to 20 nm
Source Lamp:	Halogen, Xenon flash, LED, IR, fluorescent, fiber optics
Detectors:	CCD and photodiode linear arrays or photocells
Materials of Construction:	Standard materials, ordinary or quartz glass
Cell Length:	From 0.5 to 1000 mm
Sample Pressure:	Vacuum to 150 PSIG (10.6 bars)
Inaccuracy:	1 nm for array spectrophotometers, 1% for colorimeters
Costs:	$100 for a single-channel color analog channel; $1000 for fiber-optic spectrophotometers; on-line scanning systems cost $20,000 to $60,000
Partial List of Suppliers:	Bayer Diagnostics (www.glucometer.com) Byk-Gardner, Inc. (www.bykgardner.com) Brinkmann Instruments (www.eppendorfsi.com/search.asp) Cole-Parmer (www.coleparmer.com) DataColor International (www.colorite.com) Dolan Jenner Industries (www.dolan-jenner.com) Fisher Scientific Co. (www.fishersci.com) Guided-Wave (www.guided-wave.com) Hach Chemical Co. (www.hach.com) Honeywell Microswitch Div. (www.honeywell.com) HunterLabs (www.hunterlab.com) Mahlo International (www.dfmg.com.tw/dhtml/%BCe%BCw/mahlo.htm) Minolta Inc. (www.dimage.minolta.com) Monitek (www.monitek.com/Metrisa/contactinfo.asp#monitek) Ocean Optics Inc. (www.oceanoptics.com) Omega Engineering (www.omega.com) Rosemount Analytical (www.emersonprocess.com/RAlhome) Starna (www.starna.com/d_color/x_color.html) Thermo Electric Corp. (www.thermo.com/eThermo/CDA/Products/Pr)

© 2003 by Béla Lipták

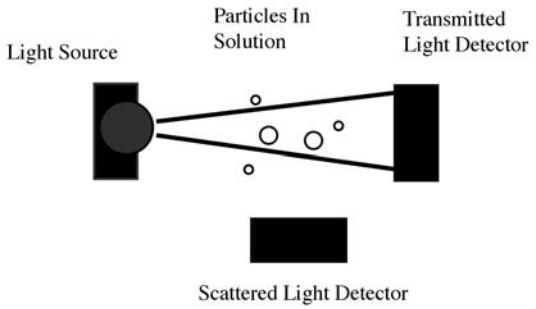

FIG. 8.15a
Turbidity measurement.

INTRODUCTION

Colorimetry involves the transmission, absorption, or reflectance of visible light and can be extended into the ultraviolet (UV) and near-infrared (NIR) spectrum. Gratings used in current spectrophotometers can be specified over a range of 200 to 1200 nm, with the visible range being from 400 to 700 nm. Visible color can be measured as an indication of a concentration or as an indication of pH in titration using dyes. Colorimeters and spectrophotometers associated with autotitrators and wet chemistry analyzers are discussed in a separate section of this chapter.

Visual colorimetry involves the matching of the sample color against standards in cuvettes, Nessler tubes, or thin films. Blood glucose meters use glucose oxidase on test strips and measure multiple-wavelength absorbances proportional to glucose concentration. Simple color wheel kits are used in water quality analysis to match depth of color in the liquid sample with a reference color calibrated in the concentration of the specific chemical end group for such measurements as pH or arsenic concentration. These are being replaced with low-cost hand-held colorimeters and spectrophotometers, which can be programmed for field use. This includes methods for turbidity measurement by nephelometry, which uses the ratio of scattered to transmitted light in suspensions, as shown in Figure 8.15a.

If colored filters such as RGB (red, green, and blue) are used, the device is a colorimeter. If a grating or prism is used, the device is a spectrophotometer. Due to the current technology of matching of CCD and diode arrays to entire spectral images, an entire spectral curve may be measured continuously. This is usually the case when the color of paper, textiles, films, or solids is being measured.

COLOR MEASUREMENT

Color measurements involve that part of the electromagnetic spectrum that is sensed by the human eye and brain. This region is approximately 400 to 700 nm. The colors of the rainbow are associated with specific wavelengths of visible light as listed in Table 8.15b.

TABLE 8.15b
Color and Wavelength Association

Approximate Wavelength (μm)	*Associated Color*
400–450	Violet
450–500	Blue
500–570	Green
570–590	Yellow
590–610	Orange
610–700	Red

Industrial standards involve color matching in which color standards are compared either by eye or with the assistance of a spectrophotometer. In the world of art,[1] separate color-matching methods have evolved that are based on color wheels that could be correlated to machine vision by taking spectral measurements of the subjective reference colors.

Absorbance and Transmittance Colorimetry

Absorbance spectra from spectrophotometers are used in the field of colorimetry of liquids where spectral absorbance curves can be compared one-dimensionally. The reason for converting to absorbance is that a logarithmic relation typically exists between transmittance at a certain wavelength and the concentration of colorants in liquid solutions. This is known as the Beer–Lambert law.[2]

Absorbance curves are generated from transmittance data with absorbance defined as the negative of the natural logarithm of T/T_o, where T_o is the transmittance of the reference standard. This standard might be a white reference tile or a cuvette of distilled water, depending on the sample application. If the spectral curve is from light reflected from a solid, these reflectance curves can also be curve-fit and compared one-dimensionally. This is suitable for quality control of materials. When consumer products are accepted or rejected based on their color perception by humans, tristimulus model parameters such as XYZ, Lch, or Lab are generated from spectral data and tolerances are set.

SPECTROPHOTOMETRIC ANALYZERS

Interference filters are selected for desired wavelengths as determined from the spectral relationship curves. Detector photoconductors are chosen to give spectral response in the visible region. All known photo detectors are least sensitive in the blue end of the spectrum. This can be dealt with by using prefilters or by using narrow spectral ranges, which are calibrated for more sensitivity.

Analyzers have to be built to carry out colorimetric analysis based on existing standards. Hundreds of one-dimensional color standards are used in the process industries. Other organizational databases include the American Public Health Association (APHA), the National Bureau of Standards (NBS), the National Institute of Standards and Technology

© 2003 by Béla Lipták

TABLE 8.15c
Saybolt Color Scale

Color Standard Number	*Depth of Oil, in. (mm)*	*Color Number*
—	20 (508)	+30
	16 (406)	+28
	12 (305)	+26
1	20 (508)	+25
	16 (406)	+23
	10.75 (273.05)	+20
	8.25 (209.55)	+18
	6.25 (158.75)	+16
2	10.50 (266.7)	+15
	9.00 (228.60)	+13
	7.25 (184.15)	+10
	5.75 (146.05)	+5
	4.50 (114.30)	0
	3.50 (88.90)	–5
	3.00 (76.20)	–9
	2.50 (63.50)	–13
	2.125 (53.975)	–16

(NIST), the American Association of Textile Chemists and Colorists (AATCC), and the American Society for Testing and Materials (ASTM). All are accessible on the Internet. The Saybolt color scale in Table 8.15c is similar to ASTM D156, "Test for Color of Petroleum Products."

Spectrophotometer Design

The design of fiber-optic spectrophotometers is shown in Figure 8.15d. These units are small enough to fit in one's hand and, if purchased in larger quantities, are sold at unit costs of $500. Improvements in spectrophotometers include a flashed xenon light source with dual-beam measurement. This is actually necessary for flashed light sources due to the variability of flashes.

Dual-beam machines measure the spectrum of both the light source and the reflected light for each measurement. Spectrophotometers are characterized by the geometry of the light source and by the view of the photosensitive device. A common geometry is the so-called 45/0 design. This is achieved by illuminating the sample with a ring of light or fiber-optic cables at an angle of 45°. The reflected light is viewed at an angle of 0° or normal to the surface. Other geometries are 0/45 and 0/0.

The processed reflected light may be captured with an integrating sphere. An integrating sphere may or may not be used. Such a device is needed to compare the diffuse and specular components of the reflected light. The number of spectral measurement points has increased from about 16 in the 1980s to about 1000 currently. Sometimes colorimeters

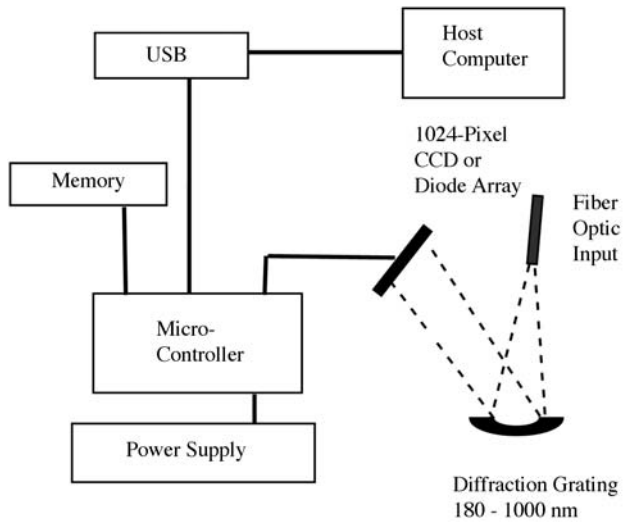

FIG. 8.15d
Fiber-optic spectrophotometer.

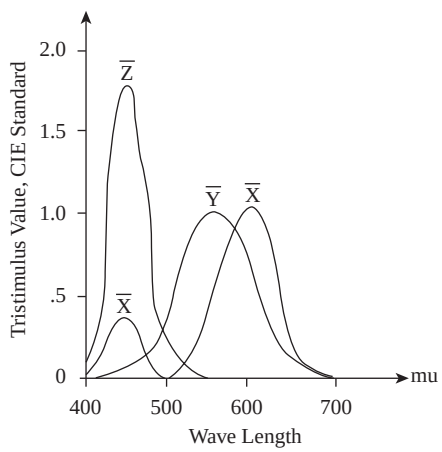

FIG. 8.15e
Spectral response of CIE standard values.

are marketed as 0/45 spectrophotometers by using up to 16 different filtered fiber-optic receptors in a ring for a 16-point spectral curve. This is inappropriate for materials having a directional shade. A true spectrophotometer collects the reflected light and then forms a spectrum. The buyer needs to make sure of the basic design inside the machine.

TRISTIMULUS METHOD (REFLECTANCE)

Reflectance color measurements utilize the reflected light from a sample to monitor the surface color of the sample. This measurement can be done with a one-dimensional color standard such as those discussed above, but in applications requiring better color definition, a tristimulus method must be used.

This method uses the Commission International del'Eclairage (CIE) model of human color perception. The method requires that the reflected spectrum from 400 to 700 nm be masked by the three functions shown in Figure 8.15e. The areas

© 2003 by Béla Lipták

under the resulting curves measured as X, Y, and Z are correlated to human color perception. These values are normalized against standard values for different lighting conditions and types of observers. The algorithm has variations depending on the vision model used.

The parameters X0, Y0, and Z0 are defined to be the areas under the white reference reflectance mask curves. Values of X0, Y0, and Z0 will vary depending on the design of the spectrophotometer. To model the human color space, the Lab shade model is used. L is the measurement of lightness and is calibrated to have the values of 0 to 100. Lch (cylindrical coordinates for lightness, chroma, and hue) and Lab (rectangular coordinates) are two three-parameter models.

The Lab Algorithm of the Textile Industry

Following is a section of the computer code, written in BASIC, by the author that takes a 16-point color spectrum and computes Lab. The PX(I), PY(I), and PZ(I) functions are those shown in Figure 8.15e. For tables of spectral data and more information on computing Lab under specific illuminants and angles of observation, see Judd and Wyszecki.[3]

```
section of BASIC code for on-line L
a b determination:

X0 = 97.9392:Y0 = 100:Z0 = 117.9648
'2DEG ILLUM C values of X, Y, Z for
'the 'white reference tile determined
at calibration

PRINT #1, "m" 'serial port command
to spectrophotometer to send 16

'ASCII spectral values from 400 to
700 nm every 20 nm

FOR I = 1 TO 16

INPUT #1, T(I) 'The 16 values make
up the raw transmittance or
'reflectance curve for the sample

NEXT I

FOR I = 1 TO 16

R(I) = (T(I)-D(I))/((W(I)-D(I)) 'W(I)
and D(I) are the white and dark 'tile
values 'respectively determined at
calibration of the system. Program
'must 'read white and dark
calibration tile spectral curves and
store in 'arrays W and D. Data files
are read for PX, PY, and PZ arrays.

X = X + PX(I)*R(I) 'numerically
integrates areas

Y = Y + PY(I)*R(I)

Z = Z + PZ(I)*R(I)

NEXT I

IF X/X0< = 0.008856 OR Y/Y0< = .008856
OR Z/Z0< = .008856 THEN

L = 903.3*(Y/Y0) 'low light condition

A = 500*((7.787*(X/X0)+16/116)
    -(7.787*(Y/Y0)+16/116))

B = 200*((7.787*(Y/Y0)+16/116)
    -(7.787*(Z/Z0)+16/116))

ELSE

L = 116*(Y/Y0)^.33333 - 16 'note that
if Y = Y0 then L = 100

A = 500*((X/X0)^.333333
    -(Y/Y0)^.333333)

B = 200*((Y/Y0)^.333333
    -(Z/Z0)^.333333)

'be sure to set all sums to zero for
repeating this
```

The Lab algorithm is commonly used in the textile, automotive, and plastics industry. The parameter a ranges from 0 to ± 128 (red to green), and the parameter b ranges from 0 to ± 128 (yellow to blue). A white reference sample is taken by calibration to have the value 100, 0, 0, while the dark reference is taken by calibration to have the value 0, 0, 0.

Calibration is a very important issue, and vendors employ many methods. The Lab or Lch measurement is often called the shade of the material. Shade measurements can be made from different angles and areas of view. A recent patent[4] that measures shade from different directions both on-line and off-line is given as a reference. Figure 8.15f illustrates how fiber optics can be combined with robotics.

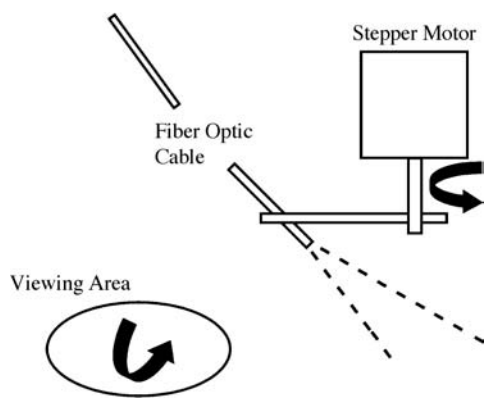

FIG. 8.15f
Fiber optics robotically positioned.

© 2003 by Béla Lipták

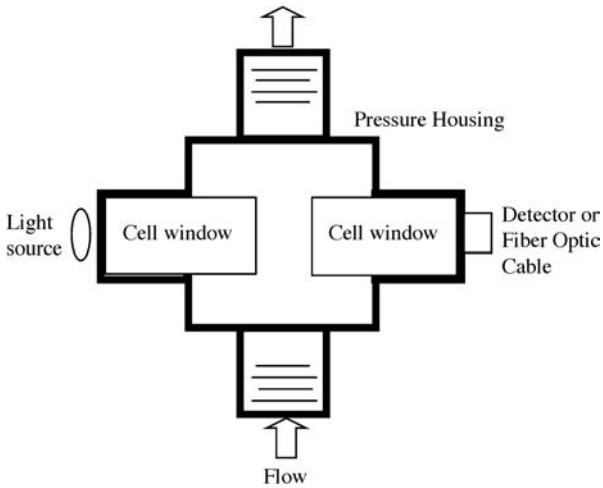

FIG. 8.15g
In-line transmittance cell.

CONTINUOUS COLOR MONITORS

In-Line Liquid Color Measurement

In-line liquid color measurement is illustrated by Figure 8.15g. Recent advances in fiber optics have allowed the light source and the photosensitive device to be remotely located from the actual sensor windows. Various cells can be installed in flow lines from 0.5 to 6 in. in diameter, or *in situ* probes can be used for batch vessels. Temperature and pressure must be specified.

The width of the light path is a key consideration due to the absorptivity of the liquid. Glass rods of different lengths can be used as cell windows. Pressures may range up to 150 PSIG and temperatures to 250°C. The cost is lower if the sample stream can be reduced in size, pressure, and temperature. Cells can be in housings rated for NEMA 1, 4, 7 or Class 1, Group D, Division 1 explosion-proof.

On-Line Shade Monitors

On-line shade monitors that feature robotics for scanning webs may also use fiber optics to enable scanning while keeping the light source and spectrophotometer stationary. Fiber optics-based spectrophotometers can be interfaced to host computers that also control stepper motors for positioning the fiber optic over a moving web, or the web can be scanned.[4] Driver software is usually available for the spectrophotometer that will run in an application for data storage in large data files for statistical process control and trending.

The output information from continuous systems can be used for alarming or for analog data transmitted by 4 to 20 mA. Spectral information is transmitted serially by RS 232, RS 422, USB (IEEE 1394).

References

1. Pearcy, B., *Decorative Painting Color Match Sourcebook*, Cincinnati, OH: North Light Books, 1997, see also www.gotcs.com.
2. Weast, R. C., Ed., *Handbook of Chemistry and Physics*, 54th ed., Cleveland, OH: CRC Press, 1973.
3. Judd, D. B. and Wyszecki, G., *Color in Business, Science, and Industry*, 2nd ed., New York: John Wiley & Sons, 1963.
4. United States Patent 5,559,605, "Method and Apparatus for Determining the Directional Variation of Shade of Pile and Napped Materials," M. W. Reed, assigned to Milliken and Co., September 24, 1996.

Bibliography

Ewing, G., *Analytical Instrumentation Handbook*, 1990.
Grayson, M., Ed., *Kirk-Othmer Concise Encyclopedia of Chemical Technology*, 4th ed., New York: John Wiley & Sons, 1999.
Nassau, K., *The Physics and Chemistry of Color*, New York: John Wiley & Sons, 1983.

© 2003 by Béla Lipták

8.16 Combustibles

R. NUSSBAUM (1969, 1982) **B. G. LIPTÁK** (1995) **J. F. TATERA** (2003)

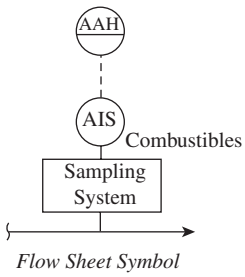

Flow Sheet Symbol

Types:

A. Measurement of filament temperature or resistance in catalytic combustion sensors is most common. Thermal conductivity is used at higher concentrations. Electrochemical and semiconductor sensors can be used when hydrogen and other known gases are to be detected.
B. Flame ionization and photoionization with or without a chromatograph can be used for accurate hydrocarbon detection. Response varies and gases of concern need to be known in the design and selection phase of the project.
C. Infrared can be used for both point and area (open-path) applications. It cannot detect hydrogen.

Note: All three types are available as portable and fixed devices, and Type A is also frequently found in a personal (pocket) device version.

Materials of Construction:

Many choices exist and offer the opportunity to select an appropriate one for a given application. Stainless steel and polymer sensor heads with ceramic and metal sensors are usually offered. Various polymer and metal constructions with the appropriate optical window selections for photoionization and infrared applications are available.

Inaccuracy:

A. 5% of lower explosive limit (LEL); linearity and repeatability from 2 to 3% of LEL
B. ppm concentrations can be detected and monitored
C. ppm and low % LEL levels achievable, but vary dramatically and usually more a function of the application than the instrument

Drift:

A. 1 to 3% of LEL per month
B. No generally accepted drift range per value
C. No generally accepted drift range per value

Cost:

A battery-operated portable gas leak detector with sensing probe costs from $300 to $1000; a combined oxygen and combustibles sensor, microprocessor based, portable with diffusion sampling, costs $2500. For a permanently installed single-channel monitor with alarm or for a multichannel system, the cost per channel is $1000 to $2500. With sampled remote head installations, the installation cost of tubing can increase the per-channel cost to $3000 to $5000, and when a flame ionization or photoionization detector is used, the cost is more like $5000 to $10,000. A portable chromatograph with electrochemical detector and 50-ppb sensitivity costs about $15,000 to $20,000. Infrared systems cost about $1200 to $2700 for a point system and $7000 to $20,000 for an open-path system.

Partial List of Suppliers:

ABB (www.abb.com) (C)
American Gas and Chemical Co. Ltd. (www.amgas.com) (A, C)
Bacharach Inc. (www.bacharach-inc.com) (A)
Bascom-Turner Instruments (www.bascomturner.com) (A)
B W Technologies (www.bwtechnologies.nl or www.gasmonitors.com) (A)
Cole-Parmer Instrument Co. (www.coleparmer.com) (A)
Control Instruments Corp. (www.controlinstruments.com) (A, B)
Delphian Corp. (www.delphian.com) (A, C)
Detector Electronics Corp. (www.detronics.com) (A, C)

© 2003 by Béla Lipták

Draeger Safety Inc. (www.draeger.com) (A, C)
Enmet Corp. (www.enmet.com) (A)
Gastech Inc. (www.gastech.com) (A)
General Monitors (www.generalmonitors.com) (A, C)
Heath Consultants (www.heathus.com) (B, C)
International Sensor Technology (www.intlsensor.com) (A, B, C)
Macurco Inc. (www.macurco.com) (A)
MSA Instrument Div. (www.msanet.com) (A, C)
Sensidyne Inc. (www.sensidyne.com) (A)
Sick Maihak Inc. (www.sickmaihak.com) (B)
Sierra Monitor Corp. (www.sierramonitor.com) (A)
Teledyne Analytical Instruments (www.teledyne-ai.com) (A, B)
Zellwegner Analytics Inc. (www.zelana.com) (A, C)

INTRODUCTION

The principles of operation and the applications of combustibles analyzers will be discussed in this section. These instruments are designed to detect the presence and measure the concentration of combustible gases and vapors on a continuous basis. The methods of detecting the presence of combustible gases and vapors can utilize the phenomena of catalytic combustion, electrical resistance, luminosity, thermal conductivity, infrared (IR) absorption, or gas ionization.

Of the above methods, the most widely used is catalytic combustion, where a change in the resistance or temperature of the sensing filament is caused by the catalytic combustion of the flammable gases, and this change is measured to detect the concentration of combustibles.

The second most widely used and a much newer technique is infrared. As will be seen, both techniques have both advantages and disadvantages. Most suppliers offer a variety of designs, so that the user might select the best choice for his application. The selection process usually considers cost, robustness, selectivity, poison resistance, speed of response, etc.

Selection Considerations

The most commonly used combustibles detectors are the catalytic filament units, which use a self-heated platinum wire as the catalytic surface to initiate combustion. A special portable variation of this unit is one that can be pinpointed at leaks by pointing a sample probe at the seals on manholes, tanks, or other containers that are likely to leak.

In some instruments, two filaments are provided: a catalytic combustion filament for low ranges, and a thermal conductivity filament for higher ranges. When the goal of the measurement is the detection of total hydrocarbons, or if the presence of lead, silicone, chlorinated compounds, or sulfur compounds could otherwise poison the catalytic filament, infrared and flame or photoionization analyzers should be considered.

Flame ionization instruments are discussed in Sections 8.12, 8.25, and 8.59 and involve the burning of the sample in a hydrogen flame. Since the flame of pure hydrogen contains practically no ions, even traces of organic material can be detected by the drastic rise in the number of ions in the flame.

Measuring circuits for catalytic bead-type sensors usually include the Wheatstone bridge for resistance and null-balance potentiometers with thermocouples for temperature measurements.

In addition to the discussion of the measuring means, complete loops consisting of measuring, readout, and alarm devices and their applicability are covered in the following paragraphs.

TERMINOLOGY, DEFINITIONS, AND BACKGROUND INFORMATION

In order to sustain combustion, each combustible gas or vapor requires a particular amount of oxygen. Some combustible gas mixtures ignite more easily than others (Table 8.16a). Additionally, the energy that is required to spark combustion also varies with the composition of mixtures.

Lower explosive limit (LEL): The lowest concentration of gas or vapor in air where, once ignition occurs, the gas or vapor will continue to burn after the source of ignition has been removed.

Upper explosive limit (UEL): The highest concentration of gas or vapor in air in which a flame will continue to burn after the source of ignition has been removed.

Flash point: The lowest temperature at which a flammable liquid gives off enough vapors to form a flammable or ignitable mixture with air near the surface of the liquid or within the container used. Many hazardous liquids have flash points at or below room temperatures. They are normally covered by a layer of flammable vapors that will ignite in the presence of a source of ignition.

The vaporization rates of the various liquids are a function of their vapor pressures, and vaporization rate increases with increased temperature. Flammable liquids are therefore more combustible at higher temperatures.

As can be seen from Table 8.16a, the ranges of air percentages within which some liquids and gases are flammable

© 2003 by Béla Lipták

TABLE 8.16a
Properties of Some Flammable Liquids and Gases

Material	*Chemical Formula*	*Specific Gravity Air = 1*	*Ignition Temperature in Air* (°F)	*Ignition Temperature in Air* (°C)	*Flammability Limits in Air (% vol.)* Lower	*Flammability Limits in Air (% vol.)* Upper
Methane	CH_4	0.55	1193	645	5.3	15.0
Natural gas	Blend	0.65	1163	628	4.5	14.5
Ethane	C_2H_6	1.04	993–1101	534–596	3.0	12.5
Propane	C_3H_8	1.56	957–1090	514–588	2.2	9.5
Butane	C_4H_{10}	2.01	912–1056	489–569	1.9	8.5
Toluene	C_7H_8	3.14	1026–1031	552–555	1.3	6.7
Gasoline	A blend	3–4.00	632	333	1.4	7.6
Acetone	C_3HO	2.00	1042	561	2.6	12.8
Benzene	C_6H_6	2.77	968	520	1.4	6.7
Carbon monoxide	CO	0.97	1191–1216	644–658	12.5	74.0
Hydrogen	H_2	0.07	1076–1094	580–590	4.0	75.0
Hydrogen sulfide	H_2S	1.18	655–714	346–379	4.3	45.0

are extremely wide. In detecting the presence of such vapors or gases, their LELs are usually of most interest, and, in order to maintain safety, flammable gas and vapor concentrations must be kept below those limits.

Since air is usually the diluent and is almost always present, all concentrations above LEL are usually dangerous. Instruments are commonly calibrated with ranges in LEL units. LEL is selected as a limit on acceptable safety, because in order to reach a buildup of atmospheric concentration of flammables, which is above the UEL, the concentration must have necessarily passed through the full hazardous explosive range. Similarly, bringing the concentration back down to a safe level below the LEL, the concentration must pass again through the full hazardous explosive range.

CATALYTIC COMBUSTION ON A HEATED FILAMENT

When mixtures of flammable gases or vapors in air come in contact with a heated and catalytically treated, fine, uniform, homogeneous platinum filament, combustion is induced at a temperature considerably below the normal ignition temperature of the particular gas or vapor. The heat generated by the combustion is measured by sensing the change of temperature of the filament by using thermocouples or by measuring the change of resistance of the filament.

Limitations

One of the common limitations of catalytic combustion type analyzers is the poisoning of the filament by silicon, sulfur, chlorinated compounds, or lead compounds. When detecting the concentration of leaded gasoline vapors, which contain tetraethyllead, a solid lead combustion product can form (by condensation) on the filament surface, which reduces its catalytic activity. One way to protect the filament against lead condensation is to maintain the filament at a temperature that is high enough to prevent this condensation. Compounds containing silicone can also poison the filaments.

These effects impair the life of the sensor to different extents, depending on sensor packaging. Specially packaged diffusion head sensors (to be discussed shortly) are more likely to last longer on such services than do the flowing sample type systems. Filament poisoning by chlorinated or sulfur compounds is also a serious problem.

In addition to special catalytic bead protective measures, ionization and infrared detectors should be considered as an alternate means of measurement where sensor poisoning is an issue.

A variety of filament protection means have been added to increase the poison resistance of the sensors. Figure 8.16b illustrates one such design, in which the catalyst support consists of a low-density macroporous structure that surrounds the platinum wire deep within the bead assembly. This provides both protection and an increased catalyst surface area. The reported result is a 10-fold or better increase in sensor life expectancy on such services as hexamethyldisiloxane (HMDS), leaded gasoline, Freon-12, ethyl mercaptan, and the like.

Life expectancies are usually defined in terms of exposure concentration hours. One high-concentration exposure of a poison has been known to knock out a sensor, and many do not respond in a fail-safe way. For this reason, nonpoisoning techniques should be considered, when poisoning is an issue.

© 2003 by Béla Lipták

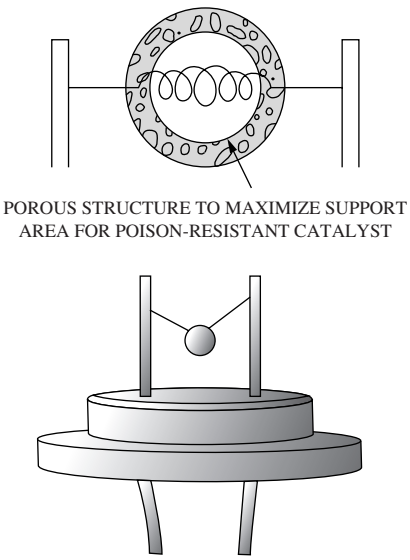

FIG. 8.16b
Porous bead construction provides poison resistance to catalytic combustion-type sensor.

Measuring Circuits

Whether the measurement is based on the change of temperature or resistance, it is convenient to use two filaments. One filament is constantly exposed to the sample (detector filament). The other is hermetically sealed in an inert atmosphere (reference filament). The reference filament is not activated with a catalyst, but its temperature resistance characteristics are similar to those of the detector filament. Its inert surface is usually exposed to the sample in a way that simplifies measurement compensation for changes in sample temperature, flow, and other potentially interfering characteristics.

The active detector filament and often the inert reference filament are mounted in a measuring chamber that is relatively large with respect to the size of the filaments. This permits a relatively large volume of sample to pass through the instrument, which ensures that the measurement filament is in contact with the sample and is measuring the current sample conditions. This design still only allows a relatively small portion of the sample to come in contact with the sensor, thereby increasing its useful life.

Thermocouple Detector In this design two thermocouples are used. One thermocouple is bonded to the reference filament, the other to the detector filament. The two thermocouples are connected in series opposition, so that a differential electromotive force (emf) is developed and applied at the terminals of the potentiometric circuit (see Figure 8.16c).

When a combustible gas or vapor is admitted to the measuring chamber, combustion increases the temperature of the detector filament, resulting in an increased emf for the thermocouple bonded to it. The temperature of the reference filament remains the same as the sample temperature, since no combustion occurs on its bead. The potentiometric

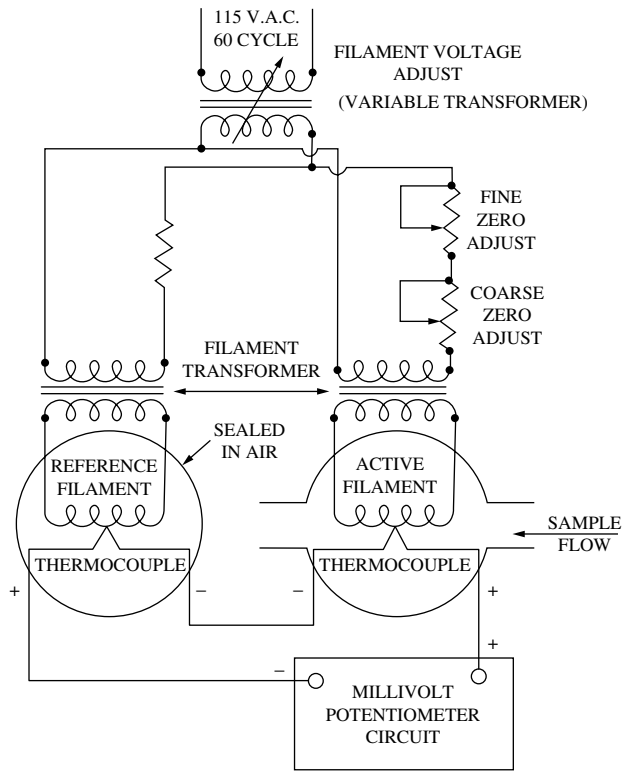

FIG. 8.16c
Thermocouple detector.

transmitter or the indicating, recording, and alarming instruments respond to the resultant differential emf.

Wheatstone Bridge Detector A Wheatstone bridge is typically used for resistance measurement. Its operation is based on the comparison of an unknown resistance to a resistor of known value, as shown in Figure 8.16d. In this figure,

$R_1 = R_2$ = constant
R_3 = reference
R_4 = sensor's measured resistance (compared to R_3)

For current I to be zero,

$$V_1 = V_2$$

$$V_1 = \frac{R_3}{R_1 + R_3} V$$

$$V_2 = \frac{R_4}{R_2 + R_4} V$$

$$\frac{R_3}{R_1 + R_3} = \frac{R_4}{R_2 + R_4} \qquad \textbf{8.16(1)}$$

$$R_3R_2 + R_3R_4 = R_4R_1 + R_4R_3$$

$$R_3R_2 = R_4R_1$$

$$R_3 = R_4$$

© 2003 by Béla Lipták

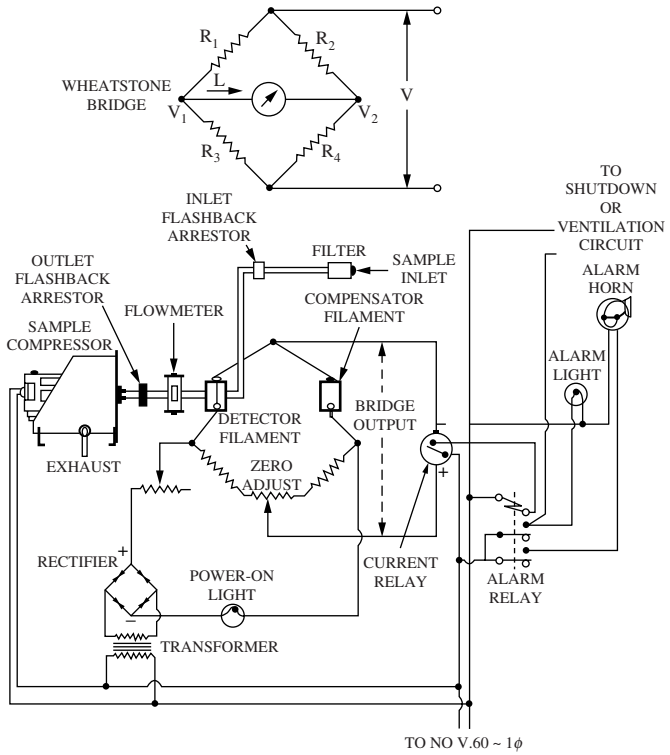

FIG. 8.16d
Wheatstone bridge detector with accessories.

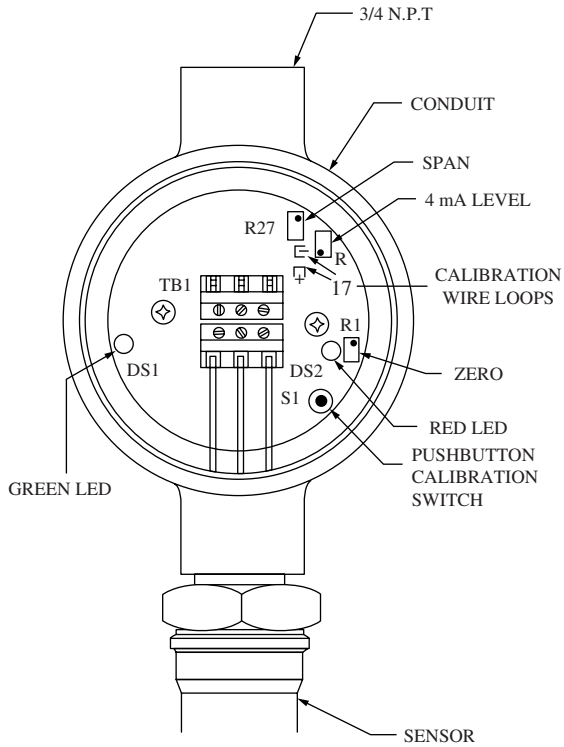

FIG. 8.16e
Diffusion-type sensor in combustible gas transmitter. (Courtesy of Sensidyne Inc.)

In the catalytic bead-type combustibles detectors, R_3 is the reference filament and R_4 the detector filament. If the sample contains no combustibles, the bridge circuit remains in balance. If, however, there are combustibles in the sample, the combustion will cause heating of the detector filament. The change of resistance of the detector filament due to heating will result in unbalancing the bridge in proportion to the amount of additional heating caused by the combustible material in the sample. The output voltage of the bridge, which is in proportion to the concentration of combustibles in the sample, is detected by a transmitter or is used to operate indicating or recording instruments or to actuate alarms.

Diffusion Head Analyzers

In contrast to most analyzers, the diffusion head analyzer does not require a sampling pump or a controlled sample flow. Rather, the diffusion head type analyzer generates sample movement by diffusion, density difference, convection, or similar effects.

Diffusion-type catalytic bead sensors are available in poison-resistant designs and in intrinsically safe or explosion-proof construction. Figure 8.16e illustrates a conduit-mounted, diffusion type transmitter with 4- to 20-mADC output. This unit is provided with a stainless steel sensor head and a polyvinyl chloride (PVC)-coated anodized aluminum conduit. Diffusion sensors can be used in still air or provided with plant air aspirators or pumps to draw a sample flow over the sensor.

Semiconductor sensors are also available in diffusion head designs. Semiconductor sensors respond to a combustible (target) gas that has been absorbed onto the doped surface of a metal oxide semiconductor, by displaying a change in the resistance of the semiconductor surface. By varying the doping layer, the manufacturer can vary the responsiveness of the detector to various materials. As with the catalyst bead surface effect sensors, poisoning is an issue.

Diffusion type electrochemical and semiconductor sensors are also available to detect hydrogen, using a sensor that is not responsive to other hydrocarbons. This is desirable in semiconductor manufacturing plants, where it is a continual task to monitor for hydrogen leaks.

Sampling System

When diffusion-based systems are not adequate, active sampling systems may be required. The sampling systems should be carefully designed. Most importantly, the sample admitted into the analyzing cell should be wholly representative of the combustible components that are present in the monitored area. The sample should also be free of particulate matter and moisture.

In applications where the sample is at excessively high or low temperatures, it is advisable to use sample conditioners. This is particularly important if the sample is hot and humid and tends to cool while passing through the sampling line. The reason is that cooling would result in condensation,

© 2003 by Béla Lipták

which, in turn, could block the sample line or introduce a time lag in the analyzer response. The sampling system should permit transport of the sample to the analyzer cell at the proper rate and minimum transportation time lag.

Since the vapors of all flammable liquids are heavier than air, detection of such vapors requires that the probes be located near the ground. Gases like hydrogen are lighter than air and require elevated probe locations. In dealing with gases, their molecular weight (heavier or lighter than air) will decide whether sampling probes should be near the ground or the ceiling of the monitored area. This may seem trivial, but is still worth mentioning.

Accessories

It is important to make sure to avoid the propagation of flame when the sampled air containing an explosive mixture of gas is ignited on the detector filament. This is not a problem when the concentrations are low or below the LEL, but a leak or spill can result in concentrations exceeding the LEL (within the explosive concentration envelope), and this leak or spill can become a source of ignition in that area of the plant.

Flashback arrestors of coiled copper screen or sintered metal are usually provided at the inlets and outlets of filament chambers. These prevent the energy that is liberated by combustion from propagating to the outside.

Samples containing hydrogen or acetylene, with concentrations of oxygen in excess of that found in normal air, have high rates of flame propagation. In such mixtures, standard flame arrestors cannot dissipate the energy liberated by combustion and, therefore, special flame arrestors have to be used.

To ensure safe operation of the detectors, a variety of alarms are provided. These alarms can signal filament failure, power failure, alarm relay failure, and low sample flow rates (not available for diffusion head type designs). Many alarms do not detect sensor poisoning as a sensor failure. If in a particular application poisoning is likely, one should make sure to thoroughly understand the functioning of the alarms before issuing a purchase order.

To ensure that an adequate amount of sample passes through the measuring chamber, flow meters (rotameters) and needle valves can be provided for all except the diffusion head type of units.

SELECTION OF COMPLETE INSTALLATION

The selection is usually made from among three basic systems, and the choice is based on the plant layout, the required speed of response, and economic considerations. The three choices are 1) remote head (continuous measurement, continuous readout); 2) multiple head (continuous measurement, sequential readout); and 3) tube sampling system (sequential measurement, continuous readout).

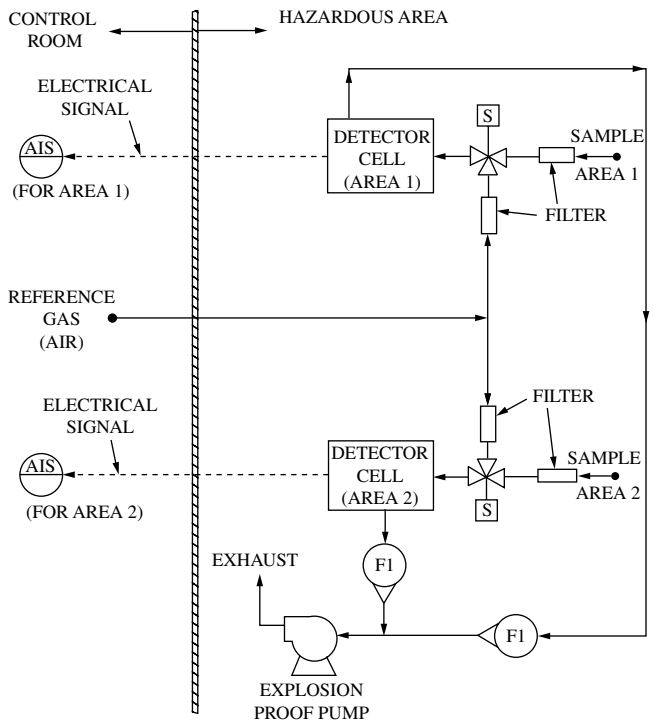

FIG. 8.16f
Remote head system.

Remote Head System

The remote head system offers the maximum application flexibility, but it does that at the highest initial cost. As shown in Figure 8.16f, this system typically consists of a number of locally mounted analyzer heads (suitable for hazardous areas) and an equal number of panel-mounted control and readout devices. The maximum number of areas monitored from one central panel is a function of the capacity of the sample pumps (or aspirators) and of the physical size of the panel. Because the analyzer heads are located in the monitored areas, the speed of response is fast.

Samples are continuously drawn, and the electrical signal corresponding to the measured combustible concentration is instantaneously transmitted to the control unit. The used sample is continuously withdrawn from the analyzer head through the tubing to the aspirator and is exhausted. Since the analyzer head is in the monitored area, it can be temperature controlled to prevent condensation. The remote head system should be selected where fast response is essential and justifies the cost.

Multiple Head System

Multiple head systems are used where at least four or more areas are monitored and a cyclic readout with the accompanying time delay can be tolerated. The multiple head system consists of a number of analyzer heads (one in each area to be monitored), one control unit with readout, and one or more

© 2003 by Béla Lipták

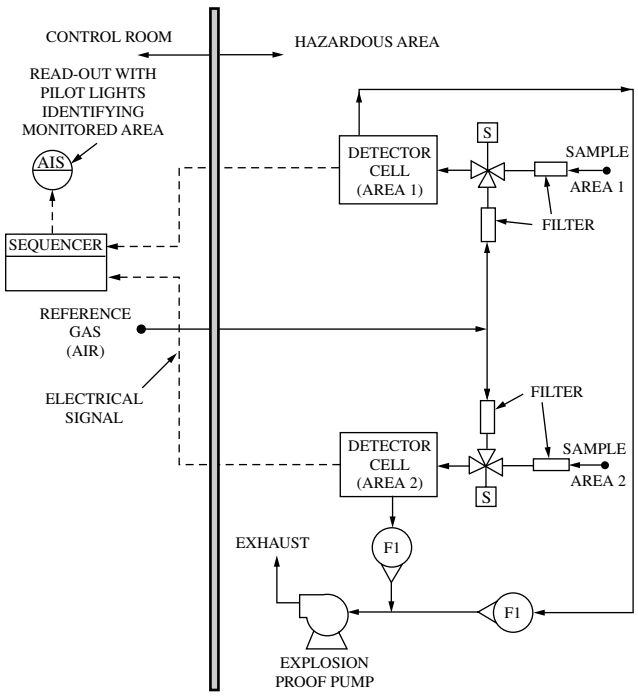

FIG. 8.16g
Multiple head system.

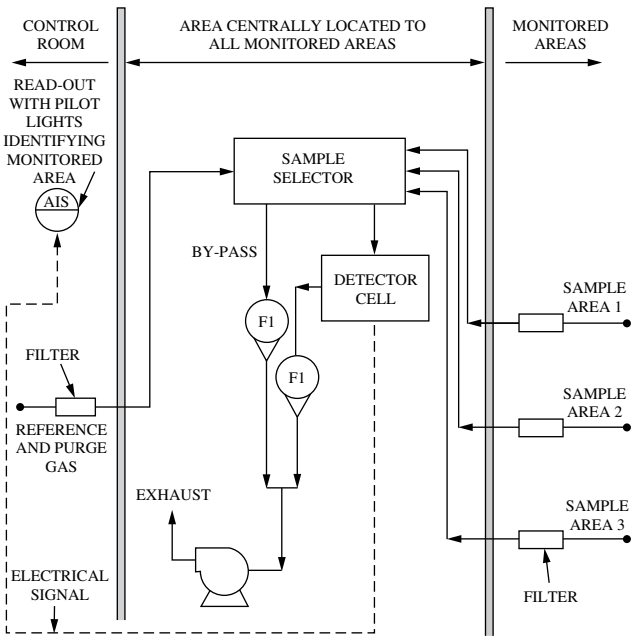

FIG. 8.16h
Tube sampling system.

sample pumps. The electrical circuit incorporates a single readout device common to all analyzing cells.

A separate alarm unit is associated with each detecting unit. The sample is drawn continuously to each sample chamber. The pump continuously withdraws the expended sample. The electrical output of each unit is transmitted to the panel, where sequential readout is provided. The dwell time for each area is typically 10 sec; i.e., if four areas are being monitored, 40 sec elapse between subsequent readings for a given area.

This system is less costly than the remote head arrangement, but it can be used only where the combustible concentration buildup is likely to occur at a slow rate (see Figure 8.16g).

Tube Sampling System

The tube sampling system consists of one analyzer head, one readout device, and a sample pump. This may be the least expensive arrangement, but sometimes the tubing cost (purchase and installation) can exceed the amount saved on the instrumentation. Samples from different areas are sequentially admitted to the common analyzer head. The electrical signal is then transmitted to the readout device.

A sample selector unit, consisting of time-sequenced solenoid valves, is arranged to admit one sample to the detector and connect all other sample lines to the sample pump. The sample is drawn continuously through each line. The sample selector is located at the analyzer head; thus lag time between successive analysis and delay due to sample travel is minimized, since a fresh sample is always present at the sample selector.

One possible means of improving the system is to use separate pumps for the sample analyzed and for those that are bypassing the detector. A clean gas purge can be provided after each analysis to prevent an erroneous reading caused by residual carryover in this type of system (see Figure 8.16h).

In order to eliminate the problems associated with condensation in the sample tubes, these arrangements should be used only where true gases and vapors with boiling points well below ambient temperatures are to be detected.

Tube sampling systems usually have a 30-sec dwell time per hour. Therefore, they should be considered only if such slow response can be tolerated. For additional safety, readout devices can be calibrated with full-scale ranges as low as 0 to 20% LEL. The alarm switches contained in the measuring circuit are used to actuate alarms, start ventilation, shut down sparking devices, and so on.

These systems are found in coating ovens, solvent recovery, and soybean extraction plants, just to mention a few typical applications.

CONCLUSIONS FOR CATALYTIC DETECTORS

In the diffusion head type analyzer, the use of sample pump or aspirator is eliminated. Dispensing with any moving part increases reliability. Therefore, the use of a diffusion head analyzer is recommended wherever a flowing sample is not needed or where clean, dry samples are to be analyzed.

Large amounts of particular matter, moisture, and dust can and will cause plugging, which is difficult to detect in diffusion head analyzers since they cannot be furnished with low-sample-flow alarms.

© 2003 by Béla Lipták

In addition to the above, the selection parameters should include the considerations of plant layout, required speed of response, rate of gas buildup, and economy.

Comparing the Wheatstone and the thermocouple cells, the following should be considered. Whereas Wheatstone bridge cells use a fine, helical filament, the thermocouple cell uses a heavy, straight filament with a much longer useful life. Further, the evaporation on the exposed filament results in a constant change of base resistance of the filament.

In the Wheatstone bridge circuit, this change of base resistance produces a shifting of zero and requires frequent rebalancing of the bridge. The temperature change measured by the thermocouple is independent of filament deterioration. Thus, for the thermocouple detector, the zero drift is reduced to a negligible amount even over long periods of time. Therefore, the thermocouple detector is often superior to the Wheatstone bridge-type detector.

FLAME IONIZATION AND PHOTOIONIZATION DETECTORS

The theory and operation of flame ionization detectors (FIDs) and photoionization detectors (PIDs) are described in greater detail in the sections describing chromatography (Section 8.12), hydrocarbon analyzers (Section 8.25), and total carbon analyzers (Section 8.58). Both detectors are commonly used in chromatography and have been utilized for combustibles monitoring in both portable and fixed installation designs.

Flame Ionization Detectors

The FID actually burns the sample in a hydrogen flame. In a simple combustibles application, no columns or carrier gases are used and the sample is used as an oxygen/air source. The sample is consumed during the combustion process. In a chromatography application, extremely clean air (as the source of oxygen) is introduced into the chromatographic column's effluent (which contains the sample) and is sent into the flame.

In these configurations, the only variable sources for ion formation in the flame are the components of interest in the column effluent or combustible contaminants in the combustibles sample. The appropriate combustible materials in the sample form ions in the flame. An oxygen-rich hydrogen and air flame basically exhausts water, nitrogen, and unconsumed oxygen. None of these are ionic in nature.

A charged electrical field is positioned across the flame, and it can conduct a current utilizing available ions in the flame as its conductor. When most combustible materials are introduced into the flame, they produce ions in their combustion products, and these are detected by the increased flow of current across the electric field (flame).

This detection method has been called a carbon counter, because of its response profile. It essentially responds to each carbon atom in the sample that has been consumed and used to form an ion in the flame. For example, one molecule of ethane has nearly twice the response of one molecule of methane.

This has both advantages and disadvantages in combustibles monitoring applications. The sensor is very sensitive to larger organic molecules. Its response to a mixture that may vary in composition can be difficult to calibrate, since different components have different LEL concentrations (see Table 8.16.a) and different detector responses. Specific and unique calibrations may be needed for each sample or application.

The instrument cannot detect hydrogen (no ions are formed in the flame). These advantages and disadvantages are listed only as examples and are by no means exhaustive. Each application needs to be studied in full detail prior to selecting an appropriate measurement method.

Photoionization Detectors

The PID utilizes a high-energy light source (normally ultraviolet (UV) radiation) as its source of ionization and measures the resulting flow of a current through the ionized sample, across a charged electric field. This detector also has several advantages and disadvantages.

It does not require auxiliary utilities (fuel gases). It can easily be made portable. It does not necessarily respond (depending on the ionization source chosen) to many potential components of interest. It requires frequent calibration and maintenance (as radiation sources deteriorate). Several different lamp strengths are available, and an appropriate one needs to be selected for a given sample. The ionization potential (IP) (eV) of each molecule needs to be matched to the strength of the ionization source being used.

For example, acetone has an IP of 9.71 and can be ionized by most common lamps having IPs of 9.8, 10.6, or 11.7 eV. Of course, each different lamp has a different response factor for acetone, while methanol has an IP of 10.85 and therefore responds only to the 11.7-eV lamp. Methane has an IP of 12.51 and would not respond to any of these lamps.

These advantages and disadvantages are only given as an example and by no means are exhaustive. As mentioned previously, each application needs to be fully studied prior to selecting an appropriate measurement method.

INFRARED COMBUSTIBLES DETECTORS

Infrared combustibles monitors are primarily a simplified and special-purpose version of an infrared filter photometer. In cases of very simple applications, they have even been used as a substitute for an infrared photometer and actually used to monitor a process sample that was introduced to them. For this reason, they have sometimes been called the poor man's IR analyzer.

Infrared photometers and spectrometers, and the technologies that they are based on, are discussed in great detail in Section 8.27, "Infrared and Near-Infrared Analyzers."

© 2003 by Béla Lipták

Basically, an infrared beam of radiation that will excite the target gas molecules is used to measure the concentration of combustible gas molecules in the sample. For combustible gas monitoring, the radiation wavelength chosen is usually one that is absorbed by the C—H bond of most hydrocarbon molecules.

When the beam of radiation excites the molecules, a portion of its energy is absorbed and the amount of energy absorbed (lost to the beam) can be correlated to the amount of the target gas in the sample. Because many other factors could impact the intensity of the selected beam of IR radiation, these instruments usually also monitor a reference (another) wavelength of radiation that is not absorbed by the combustible gas, but is influenced by several of the other factors that could affect the measured beam's intensity.

Infrared combustibles monitoring instruments are available as both point and open-path (area) monitors. Even the point monitors are sometimes called open, because the IR measurement cell is actually open to the atmosphere. They typically rely on atmospheric diffusion to supply the sample and, consequently, the cell must be open to allow the diffusion of sample into the measurement area to take place.

Open-path instruments, on the other hand, actually use a large, open atmospheric path as their measurement cell (tens to hundreds of meters). IR combustibles monitors are a relatively new innovation in the field of combustibles monitoring, but they have already gained wide acceptance as a niche technology. They perform well on many samples that other technologies have problems with. This is especially true for many gases that can poison other combustibles sensors and for monitoring requirements where the likely points of leakage are difficult or impossible to predict.

Diatomic molecules like hydrogen, oxygen, and nitrogen have no usable IR absorbance and cannot be detected by these IR monitors. Consequently, IR combustibles monitoring systems should not be used for hydrogen or hydrogen-containing combustibles mixtures. The response of each potential gas or mixture to the detection method needs to be considered when selecting a monitor.

Point Infrared Systems

Point IR systems monitor the sample at the measuring head, just like the other previously discussed point style combustibles monitors. If it is intended to monitor a sample that is not diffusing into the sensor head and is not located immediately adjacent to it, the sample must be transported to the sample head using a sample transport system. A couple of point IR designs are shown in Figures 8.16i and 8.16j.

Figure 8.16i depicts a reflector style point sensor design, where the IR source and detector are both located on the same side of the sample chamber. The measurement and reference IR beams are transmitted, reflected off of a mirrored reflector, and pass through the sample twice during the analysis. With this type of sensor there is no chemical reaction of the gas, and as such, the materials that poisoned catalytic beads cannot poison these sensors.

But nothing is perfect or without its own Achilles' heel. For an IR point monitor to do its job, the IR radiation beam must pass through the sample and be partially absorbed by the sample of interest before reaching the detector. If the sample becomes opaque to the IR measurement beam or if the optical path is otherwise blocked (condensation or dirt on the windows, heavy fog, dust, etc.), the instrument can be rendered inoperable. Typically, the mirror and windowed instrument compartment are purged or maintained at

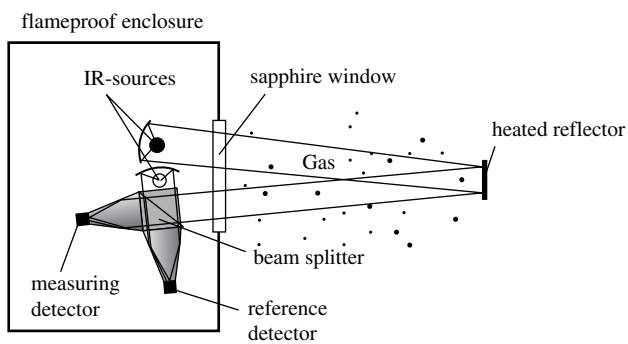

FIG. 8.16i
IR reflector style point sensor. (Courtesy of Draeger Safety Inc.)

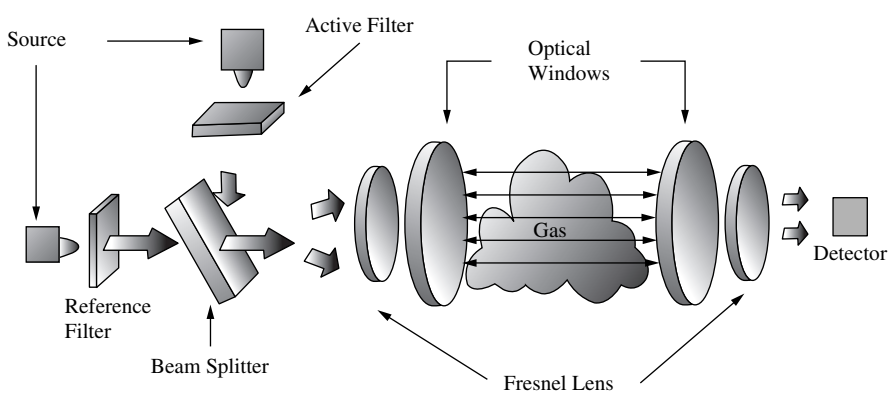

FIG. 8.16j
IR one-pass point sensor. (Courtesy of General Monitors Inc.)

© 2003 by Béla Lipták

a temperature that is intended to prevent condensation on either the window or mirror.

Figure 8.16j depicts a one-pass point IR sensor design, where the IR source and detector are located on opposite sides of the sample chamber. This analyzer is very much analogous to the reflector style sensor head depicted in Figure 8.16i, except that the beam of radiation only passes through the sample once.

In the reflector style, the beam has the opportunity to interact with the sample twice, and if all else was equal and good, the instrument should depict twice the sensitivity (or twice the interference to things like fog, dust, etc.). In real life, the sensitivities are usually not that different between the different designs, and the benefits are more often expressed in the form of a smaller sensor head or other geometric benefits.

Area (Open-Path) Infrared Systems

All of the previously covered combustibles monitoring technologies can be classified as point monitoring systems. They only measure the atmosphere at the points where they have been located (the gas of interest diffuses to a sensor) or sampled from. To monitor a large area, one would have to locate many monitors (points) and hope that they represent the area's general atmosphere.

Open-path IR combustibles monitors project their IR beams in a path that is typically 10 to 200 m in length and monitor all of the combustibles in that path. This is not really an area (more of a line or path) detector, but the value it determines can be viewed as more representative of an area value, and few instruments could provide a value that more nearly represents an area than would be needed with point monitors.

Figure 8.16k depicts some of the conceptual differences between point and open-path applications. The figure shows examples of leak detection applications under both no-wind and mild wind conditions. It can be seen that the leak cloud shape varies as a function of atmospheric conditions. Leak cloud shapes also vary as a function of the composition and the conditions of the sample.

Lighter and hotter gases rise faster, and samples under different pressures produce different rates of release and dispersion. Therefore, it is very difficult to locate a sensor (point

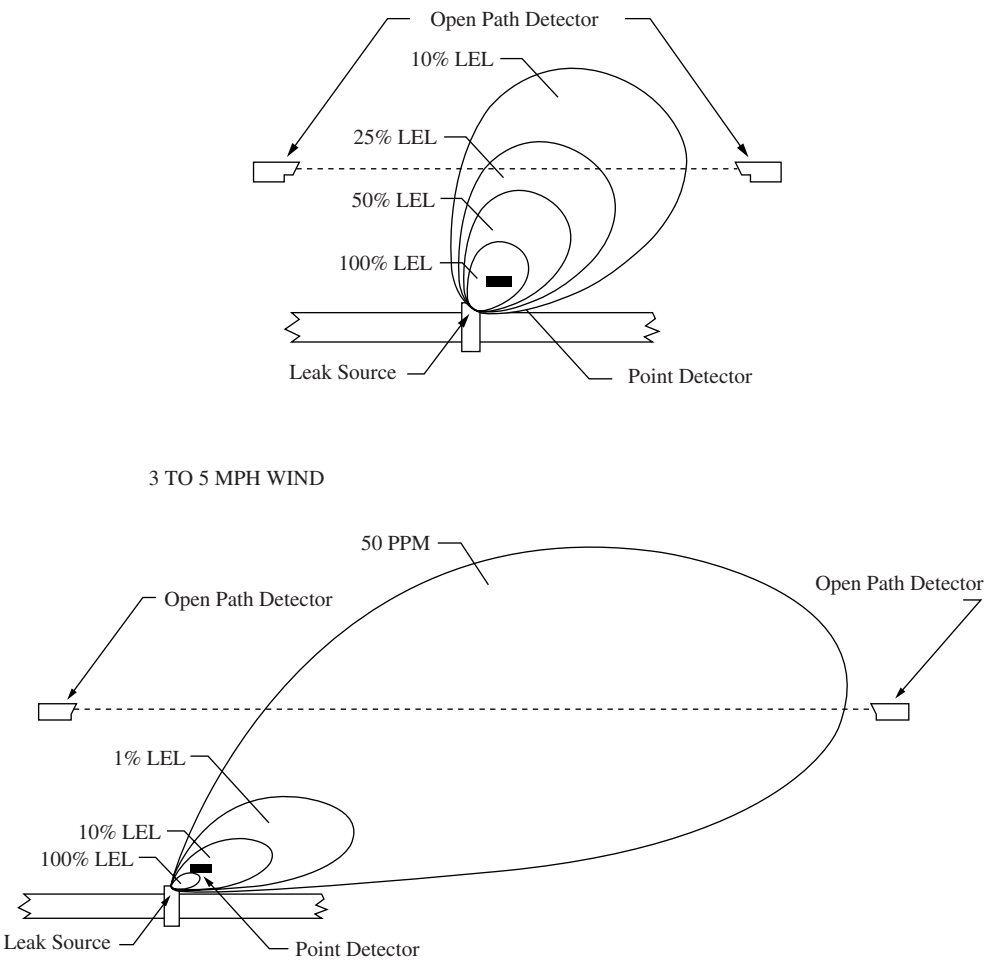

Fig. 8.16k
IR open-path vs. point monitoring concept. (Courtesy of General Monitors Inc.)

© 2003 by Béla Lipták

or open-path) in a way that will always accurately measure and detect a leak, unless it is located almost exactly at the source of the leak.

Both leak examples in Figure 8.16k show the use of both a point and an open-path monitor. It is easy to see the benefit one can gain by locating a good point monitor at a potential leak source. By so doing, one would get both an earlier and quicker detection, as the sample concentration is always higher closer to the leak.

It is also easy to see the benefits of locating a single open-path monitor along a pipeline that may contain many potential leak sources, as opposed to installing many point sensors, which would be very costly and impractical. Open-path sensors can also better cover a general area, where the positions of potential leak sources may be difficult to predict. Similar benefits can be visualized regarding other applications, like perimeter monitoring, room monitoring, fence line monitoring, or other general-area monitoring tasks.

It is important to note that the point and open-path techniques utilize different reporting values. Point techniques utilize parts per million (ppm) or percent LEL (%LEL) values, as described in the definitions at the beginning of this section and as listed in Table 8.16a. Open-path techniques utilize the units of parts per million or LEL meters (ppm.m or LEL.m). These will be discussed in more detail later in this section. It is fair to say that in most applications, open-path monitors are used more to detect leaks than to determine the absolute degree of hazard associated with the leak. This is because of the various leak cloud shapes that could exist and the way the instruments add or average the concentrations along their path.

Hydrocarbon Gases in the Atmosphere

Properly applied open-path monitors can be effective in monitoring combustible hydrocarbon gases in the atmosphere. Figure 8.16l shows an example of a typical open-path monitor. This installation involves installing two field devices. In this example, they are the source and the receiver or detector sections of the monitoring instrument. In other examples, they may consist of the instrument (source and detector) and a reflector.

In all cases, proper positioning and alignments are crucial to the success of the application. The beam must be positioned in a way that will enable it to detect the leaks of interest. The alignment is typically done with the aid of a vendor-supplied or recommended rifle scope that is mounted on one of the sections of the unit; using it helps in precisely aligning the beam, so that it properly hits the other unit.

The instrument needs to be located not only where it can make the best measurement of the leak, but also where it can perform. It must not be located where it can be exposed to shock or vibration, because this could make the alignment unstable or impossible. The monitor also must not be located where people, cars, or other equipment can block the beam.

Figure 8.16m depicts how an open-path instrument can compensate for partial blockages of its beam by light-obscuring interference, such as rain, fog, dust, etc. Essentially, it calculates the ratio of the measurement and the reference radiation signal. Most partially obscuring interferences will reduce both signals to the same extent. Therefore, the ratio of the signals is relatively unaffected by the interfering obstruction. On the other hand, the presence of a combustible gas will reduce only the measurement signal and therefore will result in a change in the ratio of the two radiation signals. This naturally is not the case if the signals are totally or nearly totally blocked. In that case, the instrument sensitivity and ability to detect a combustible gas are partially or completely lost.

Sunlight, flames, and many other light sources also produce infrared radiation. To reduce or eliminate their effects on the performance of IR instruments, choppers, filters, focusing optics, digital signal processing techniques, and other aids are utilized. In general, these miscellaneous IR sources do not interfere with the performance of today's IR type combustibles monitors. Yet, under extreme situations, they can still reduce sensitivity, by swamping the detector with too much radiation, and consequently, they should be considered when designing the field installation.

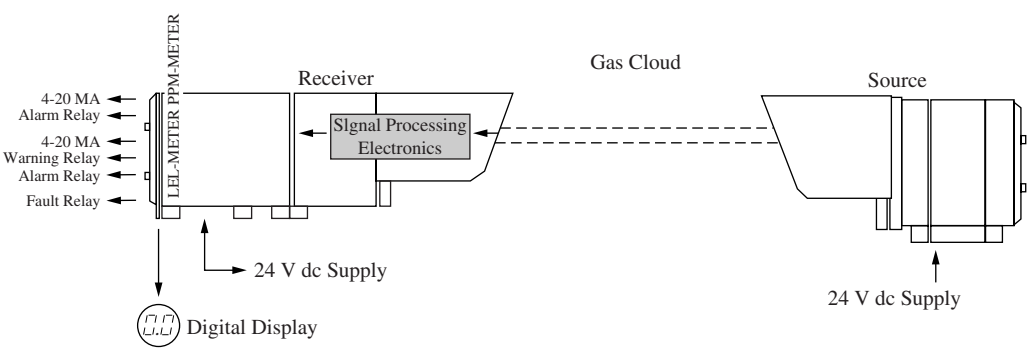

FIG. 8.16l
A single-pass, open-path IR system. (Courtesy of General Monitors Inc.)

© 2003 by Béla Lipták

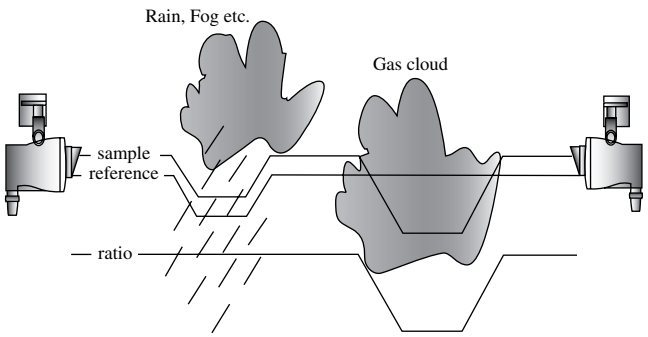

FIG. 8.16m
Open-path IR signal response. (Courtesy of Zellweger Analytics Inc.)

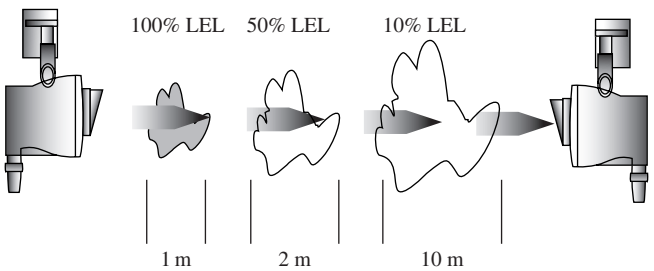

FIG. 8.16n
Open-path IR measurement units. (Courtesy of Zellweger Analytics Inc.)

Point Measurement

The open-path IR systems monitor the concentration over the length of their optical path, but how can they be used to measure the concentration at any one point along this path? Do they operate like radar and actually monitor the concentrations at various points along the optical path? No, they do not. They essentially measure the number (concentration) of combustible gas molecules along the path in an integrated or cumulative fashion and report a number that incorporates the dimensions of both the concentration and distance.

Figure 8.16n illustrates how these instruments measure and report their readings. It should be kept in mind that the measurement is along a beam or path and, therefore, it is not detecting an area or a point. Percent or parts per million (ppm) readings are obtained by integrating the product of the concentration of the gas (along the length of the IR beam) by the length of the cloud (along the optical path).

In Figure 8.16n, there are three clouds in the optical path of the monitor. Each cloud has a different gas concentration and size, but all three are equal in LEL-meter units. In terms of their open-path reporting dimensions (100% × 1 m = 50% × 2 m = 10% × 10 m = 1 LEL·m each), if all three clouds were in the optical path simultaneously, the instrument would report the total presence of combustible gases as 3 LEL · m.

Clearly, the 1 m 100% LEL cloud is potentially explosive and the most dangerous of the three, but this method of monitoring does allow one to distinguishing between them. It cannot distinguish between small clouds of high concentration and large clouds of low concentration. It simply measures the total amount of target gas in its optical path. For this reason, the use and applicability of open-path IR combustibles monitoring is limited. Yet, this sensor still fills a niche market, and it can make some difficult monitoring applications feasible and practical.

All of the combustibles monitoring technologies reviewed in this section have strengths and weaknesses. Each has some advantages and disadvantages relative to the others. It is up to the user and the supplier to work together in evaluating these differences and picking the most appropriate technology for a given application.

Bibliography

Anderson, G. L. and Hadden, D. M., *The Gas Monitoring Handbook,* Perl River, NY: Avocet Press, 1999.

Baucke, C. G., "Application Considerations for Catalytic Combustible Gas Detectors," in *Analysis Instrumentation,* Vol. 12, Research Triangle Park, NC: ISA, 1974.

Burgess, D., "The Flammability Limits of Lean Fuel-Air Mixtures," in *Analysis Instrumentation,* Vol. 12, Research Triangle Park, NC: ISA, 1974.

Callahan, J., "Performance Standards for Combustible Gas Detectors," *Instrumentation Technology,* December 1981.

Chou, J., *Hazardous Gas Monitors: A Practical Guide to Selection Operation and Applications,* Raleigh, NC: SciTech Publishing, 2000.

Clansky, K. B., *The Chemical Guide to the OSHA Hazard Communication Standard,* 6th ed., South Yorkshire, U.K.:Roytech, 1991 (revised annually).

Dailey, W. V., "Monitoring Toxic and Flammable Hazards," *InTech,* February 1973, pp. 23–28.

Duncan, J. E., "CSA Standard C22.2 No. 152: Combustible Gas Detection Instruments," AID Symposium, ISA, Research Triangle Park, NC, May 11, 1976.

Jessel, W., "Planning and Designing Gas Detection Systems," *Sensors,* January 2002, Vol. 19, No. 1. pp. 34–39.

Johanson, K. A., "Gas Detectors by the Acre," *InTech,* August 1974, pp. 33–37.

Merman, J. M., "Application Considerations for the Installation of Combustible Gas Detectors," ISA96 Symposium, ISA, Research Triangle Park, NC, 1996.

Rayburn, S., *The Foundations of Laboratory Safety*, New York: Springer-Verlag, 1990.

Sherman, R. E., Rhodes, L. J., and Tatera, J. F., "Combustible Gas Analyzers," in *Analytical Instrumentation: Practical Guides for Measurement and Control,* Research Triangle Park, NC: ISA, 1996, pp. 291–308.

White, L. T., *Hazardous Gas Monitoring*, Norwich, NY: William Andrew Publishing, 2000.

© 2003 by Béla Lipták

8.17 Conductivity Analyzers

A. BRODGESELL (1969, 1982) **K. S. FLETCHER** (1995), **REVIEWED BY R. R. JAIN**
J. R. GRAY (2003)

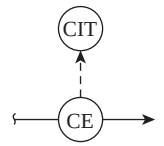

Flow Sheet Symbol

Standard Design Pressure:	To 500 PSIG (3.5 MPa)
Standard Design Temperature:	To 390°F (200°C)
Element Materials:	Cells: glass, epoxy, and stainless steel. Electrodes: platinum, nickel, titanium, and carbon. Electrodeless: epoxy, Noryl, PFA, PEEK (polyether ether ketone), and polypropylene.
Cost:	For $700 one might obtain an analyzer with these features: panel-mounted monitor, general-purpose electrical class; NEMA 1 environmental protection; ±1% accuracy; RFI/EMI protection; two-electrode contacting sensor with 3/4-in. NPT process connection; single analog output. For $1500 one might obtain an analyzer with these features: pipe or surface-mounted field monitor; Division 2 electrical class; NEMA 4X environmental protection; ±0.5% accuracy; RFI/EMI protection; high-temperature electrodeless sensor capable of measuring hot acid, base, or salt solutions; dual analog outputs.
Range:	0 to 0.05 μS/cm minimum; 0 to 2 S/cm
Inaccuracy:	Up to ±0.5% of full scale
Partial List of Suppliers:	ABB (www.abb.com) Analytical Technology Inc. (www.analyticaltechnology.com) Electro-Chemical Devices (www.ecdi.com) Endress + Hauser (www.endress.com) The Foxboro Company (www.foxboro.com) +GF+ Signet (www.gfsignet.com) GLI International (www.gliint.com) Honeywell (www.honeywell.com) Horiba Instruments, Inc. (www.horiba.com) Knick (www.knick.de) Mettler-Toledo (www.mt.com) Osmonics Lakewood (www.osmonics.com) Rosemount Analytical (www.rauniloc.com) Sensorex (www.sensorex.com) Thermo Orion (www.thermo.com) Thornton (www.thorntoninc.com) Van London Co. (www.vanlondon.com) Yokogawa (www.yca.com)

Conductivity sensors measure a solution's ability to conduct electricity, which is a function of all dissolved ionized solids in the solution. These detectors are packaged either as probes (with isolating valves for removal, without opening up the process) or in the flow-through designs.

INTRODUCTION

Conductivity analyzers measure ionic concentration of electrolyte samples. Cells and instrumentation are designed to measure the electrical resistance (or its reciprocal, the conductance)

© 2003 by Béla Lipták

TABLE 8.17a
Equivalent Conductivity of Several Ions at Infinite Dilution at 25°C[a] ($S \cdot cm^2 \cdot mol^{-1}$)

Cations[b]	*Γ, degrees*	*Tempco, degrees*	*Anions*[b]	*Γ, degrees*	*Tempco*[c]
H^+	349.8	0.0139	OH^-	198.6	0.018
K^+	43.5	0.0193	$C1^-$	76.4	0.0202
Na^+	50.11	0.0220	SO_3^-	71.42	0.020
Ca^{+2}	59.50	0.0230	SO_4^{-2}	80.0	0.022
Mg^{+2}	53.06	0.022	CO_3^{-2}	69.3	0.02
Cu^{+2}	53.6	0.02	HCO_3^-	44.5	—
$(n\text{-}Bu)_4N^+$	19.5	0.02	Picrate$^-$	30.4	0.025

[a]Data from reference 1.
[b]Data are on an equivalent basis.
[c]Tempco = (1/Γ°) (dΓ°/dT).

in a volume element of the electrolyte and to limit electrode–solution interfacial contributions to this measurement. A variety of sensors have been developed, some using electrodes in contact with the sample, and others not. These sensors can be combined with modern microelectronics, often with integrated software programs, which improves the quality of measurement of concentration of ionic components in process samples.

THEORY OF OPERATION

The unit of conductance, the reciprocal of the ohm, is the siemens (S). This unit impresses a measurement of the mobility or velocity of ions in an electrolyte under an imposed electric field. The value of this unit depends on the number and hence on the concentration of ions present, which provides its value in analytical measurements. However, since the mobilities of dissimilar ions are different, the measurement response provided by the cell is useful only if the detected component is the sole, or at least the major, contributor to the measured conductivity. *Equivalent conductivity* is defined as the conductance that is reported for one gram-equivalent weight of the conducting ion.

The mobility of ions is affected by temperature and by the total concentration of all ions in the solution. Mobility of ions and hence conductance increases with temperature (about 2% per °C) and also with dilution. Table 8.17a shows values of conductance, expressed as equivalent conductivity, of several ions at 25°C corrected to infinite dilution, together with temperature coefficients.

Figure 8.17b shows the relationship of cell geometry to the measured conductance of the solution. The electric field applied to the cell is E/d. The current density i/A is the sum of the individual charge carriers in the field, and therefore the conductivity L (which from Ohm's law is the current divided by the voltage) is given by

$$L = (a/d)\ \Sigma_i z_i \cdot c_i \cdot \Gamma_i \qquad \textbf{8.17(1)}$$

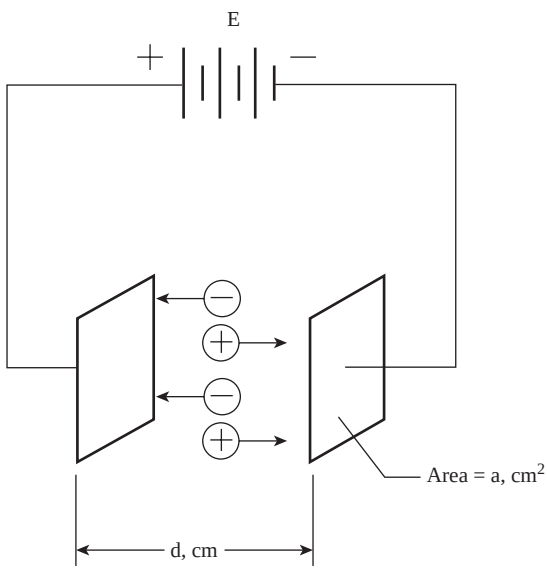

FIG. 8.17b
Simplified schematic of two-electrode conductivity circuit.

where
- L = the conductance in ohm^{-1} or siemens
- a = the area of electrodes in cm^2
- d = the distance between electrodes in cm
- c_i = the concentrations of the participating ions in equiv./cm^3
- Γ_i = the equivalent conductivity of the participating ion in $S \cdot cm^2$/equiv.
- z_i = the charge on the participating ion

THE CELL CONSTANT

It is not convenient to measure the ratio d/a geometrically for each cell, but since it is constant for any given cell, it may be assigned a value θ, in cm^{-1}, termed the *cell constant*. It is determined experimentally using solutions of accurately

© 2003 by Béla Lipták

TABLE 8.17c
Specific Conductivity of Potassium Chloride Solutions Used for Determination of Cell Constants

Approximate Normality	*Weight, KCl in g/l of Solution*	*Temperature (°C)*	*k μ S/cm*
1.0	72.2460	0	65,176
		18	97,838
		25	113.342
0.1	7.4265	0	7138
		18	11,167
		25	12,856
0.01	0.7440	0	773.6
		18	1220.5
		25	1408.8

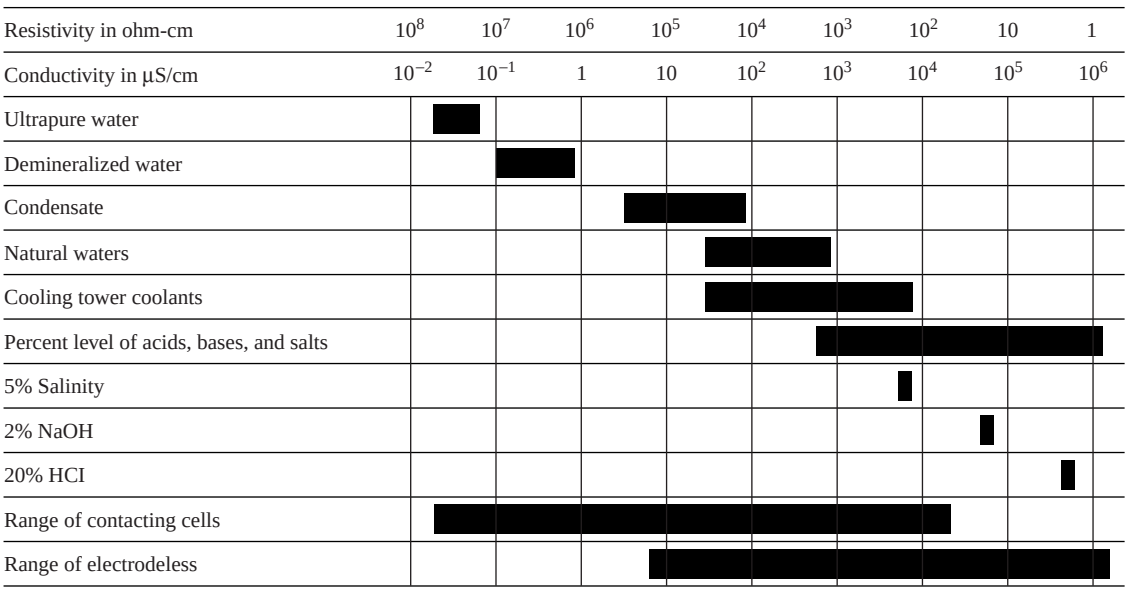

FIG. 8.17d
Resistivity/conductivity spectrum of aqueous electrolytes. (From Light, T. S., Chemtech, August 1990, pp. 4960–4501.)

known concentrations of potassium chloride, for which values of specific conductivity (the conductance of a cube of the solution, 1 cm on each side), denoted by k (in S/cm), have been precisely determined per American Society for Testing Materials (ASTM) Standard D1125–77. A few specific conductivity values are listed in Table 8.17c.

The cell constant is readily determined using the expression θ = k/L, where k (the specific conductivity) is known from the tabulated values, and L (the conductance) is measured using the cell being calibrated. Note that conductance and resistance are values read by measuring instruments and have the units of siemens and ohms, respectively. Conductivity and resistivity are intrinsic properties of solutions; they are obtained after application of the cell constant and have the units of siemens-centimeter and ohm-centimeter, respectively.

Cell Dimensions

As the dimensions of the cell are changed, the cell constant varies as the ration of d to a. For solutions of low conductivity (about 0.05 to 200 μS/cm), the electrodes can be placed closer together, giving cell constants in the range of 0.1 to 0.01 cm^{-1}. Similarly, for more conductive solutions (about 10 to 20,000 μS/cm), electrode separations can be increased to give cell constants of 1, 10, or sometimes 100 cm^{-1}.

This has the effect of adjusting the actual conductance read by the instrument to a conveniently measured range. Signal-to-noise considerations limit resistance measurements to less than about 2 Mohm. Conductance measurements are limited by signal level magnitudes to less than about 0.2 mS.

Composition measurement using conductivity is popular in industrial process measurement and control applications, because of the inherent simplicity and reliability of the technique. Cells are available that cover a resistivity range of 1 to 10^8 in aqueous electrolytes (Figure 8.17d).

Three types of cells are used: two-electrode, four-electrode, and electrodeless. The four-electrode and electrodeless cells and their associated instrumentation are shown in Figures 8.17e and 8.17f, respectively.

© 2003 by Béla Lipták

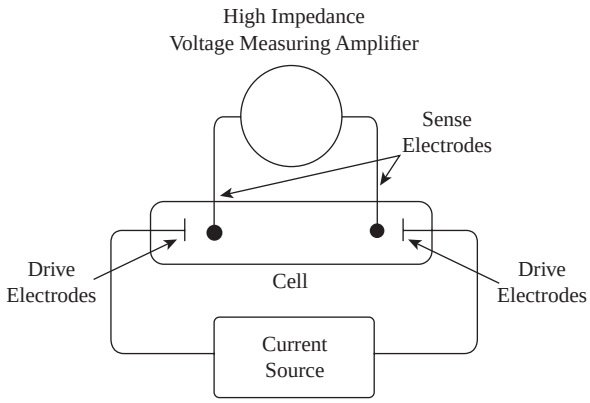

FIG. 8.17e
Four-electrode conductivity measuring circuit.

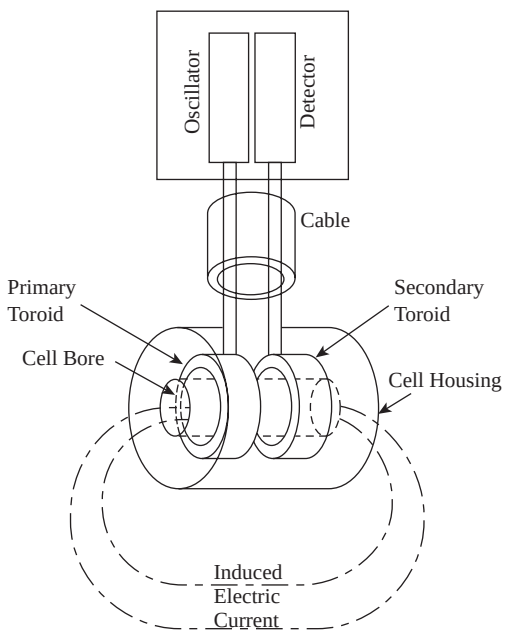

FIG. 8.17f
The electrodeless conductivity cell and instrument. (From Light, T. S. et al. Talanta, 36, 235–241, 1989.)

Two-Electrode Cells

Two-electrode cells are best suited for measurement in clean solutions to avoid errors caused by the formation of coatings and films on the electrodes. In these designs, it is desirable to minimize the interfacial impedance of the electrodes with the solution, because the goal is to measure the bulk conductivity of the electrolyte.

Derivation of Equation 8.17(1) assumed no iR (potential) loss at the electrodes or in the leads to the cell. The cell and instrument are designed accordingly. In order to avoid significant electrolysis, a small-amplitude (usually sinusoidal) waveform having a frequency in the range of 100 to 1000 Hz is used for excitation.

In addition, the electrode materials are selected to reduce polarization or iR (potential) drops at electrode–solution interfaces.[3] Ideally, the electrodes are made of platinum and are coated with a layer of platinum black. As the conductance of the measured solution decreases, polarization and coating effects become less significant, and metals other than platinum, such as Monel and titanium, are considered as inert electrode materials.

Particularly noteworthy is the class of two-electrode conductivity applications, called resistivity measurements, which employ titanium two-electrode cells in monitoring the high-purity water used in semiconductor manufacturing, steam turbine applications, and nuclear reactors.

Four-Electrode Measurement

Four-electrode conductivity is useful for high conductance when coating and fouling of electrodes are a concern. Current is imposed across two drive electrodes, and the potential drop through the electrolyte is detected between two points in the cell using two sense electrodes (Figure 8.17e). The sense electrodes are monitored with a high-input impedance, voltage-measuring amplifier to minimize the current drawn and electrode polarization.

Polarization at the drive electrodes has no effect on the measurement, provided the drive voltage is able to maintain the control current through the cell.[4] This voltage increases with fouling and can be used as a diagnostic tool to signal the user when cleaning is required.

Because of geometrical considerations, four-electrode designs are not suited to probe configurations. Precise measurements require flow-through cells that allow linear distribution of current across the sense electrodes. When used in probes, four-electrode measurements are best applied to set-point control.

Typical applications include measurement of salts, acids, and alkalis in chemical processes in the mining, metallurgy, pulp and paper, and aluminum industries, where samples often contain solids, oils, or other materials that form insulating coatings on the electrodes.[5]

Electrodeless Cells

One way to eliminate electrode polarization effects is to eliminate the electrodes. Techniques to do this are referred to as electrodeless conductivity measurement or, alternately, as inductive or toroidal sensing of conductivity.[6,7] The probe shown in Figure 8.17f consists of two encapsulated toroids. When immersed in the electrolyte, the solution forms a conductive loop shared by both toroids. One toroid radiates an electric field in this loop, and the other detects a small, induced electric current. Practically speaking, the two toroids form a transformer whose coils are interconnected by the resistance of the electrolyte.

The radiated field is typically 20 kHz, and the induced current, which is proportional to the conductivity, is amplified, rectified, and displayed. These probes are encapsulated in nonconductive, temperature-stable, and chemically resistant materials such as the fluorocarbon polymers.

© 2003 by Béla Lipták

MEASUREMENT APPLICATIONS

Modern conductivity analyzers, with on-board computers, provide essential features such as temperature correction to reference values, digital display of concentration data from measured values, controller functionality, self-diagnostics, and calculations such as water subtraction and percent rejection.

Concentration Measurements

Temperature compensation and concentration computation data for common acids, bases, or salts are often imbedded in the instrument's software. Data for less common materials may often be loaded by the end user. Concentration can be derived from the conductivity of an electrolyte, when there is a significant increase or decrease in conductivity with increasing concentration.

While concentration measurements are most often applied to a single electrolyte in solution, they can also be applied to mixtures of electrolytes, when the ratio of the components of the mixture is constant. Concentration measurement is also used in batch reactions, where the progress of the reaction is accompanied by a significant increase or decrease in conductivity. Output signals, either digital or analog, are used in control systems for measurement and control of such processes as boiler feed water or the monitoring of gas scrubber solutions, pickling and plating liquors, etc.

High-Purity Water Measurements

A special class of temperature compensation has evolved for measuring high-purity water. Monitoring of high-purity water is used in semiconductor processing. In power and pharmaceutical applications, it is necessary to distinguish the temperature coefficient of pure water from that of ionic purity.

Today's "intelligent" instruments can measure both conductivity or resistivity and temperature. They can therefore compute the value of conductivity or resistivity of pure water at the measured temperature. They can also calculate the measurement contribution due to the impurities and output the conductivity or resistivity of the process water, referenced to a standard temperature, or the concentration of impurity after subtraction of the contribution due to the water (for example, as total dissolved solids (TDS) or particles per million (ppm) NaCl).

Multiple sensors are used in conjunction with ion exchange columns or reverse osmosis systems to monitor and control inlet and outlet resistivity across the bed and the breakthrough of unwanted ions and, as a predictive tool, to signal the need for bed regeneration. If the sample temperature is not controlled, water temperature compensation is necessary for accurate measurements for conductivity values at or below 1 μS/cm, or resistivity readings at or above 1 Mohm·cm. A variant of this temperature compensation, called cation conductivity temperature compensation, is used for high-purity water samples, such as the effluent of a cation exchange bed, which has acid as the major impurity.

Corrosive and Fouling Applications

The other extreme, i.e., highly conductive solutions—those that are highly concentrated, corrosive, and contaminated with fouling materials—is best measured with the electrodeless designs. Here, coatings only affect the measurement response to the extent that they alter the geometry, and hence the cell constant, of the probe. The relatively large size of these probes renders this effect small or negligible. Examples of applications include on-line analysis of oleum in H_2SO_4—SO_3—H_2O, measurement and control of alkalinity and solution strength in many industries using lime slaking, industrial dishwashing rinse control, gas scrubber solution concentration control, and many others.[6]

Pulp processing uses extremely corrosive chemicals, high temperatures and pressures, and samples entrained with solids and particles; such processing provides an example of how conductance analyzers are applied. Figure 8.17g shows how the conductivity sensors are integrated into a continuous Kraft digester commonly used in paper pulp making.[9]

Temperature, flow, and alkali concentration data are used by the control systems to control the uniformity of the pulp by manipulating the residual alkali strength in the cooking liquor in response to such changing feed properties as wood chip composition, species, chip moisture, and uniformity of concentration of makeup chemicals. For a summary of conductivity analyzer applications, refer to Table 8.17h.

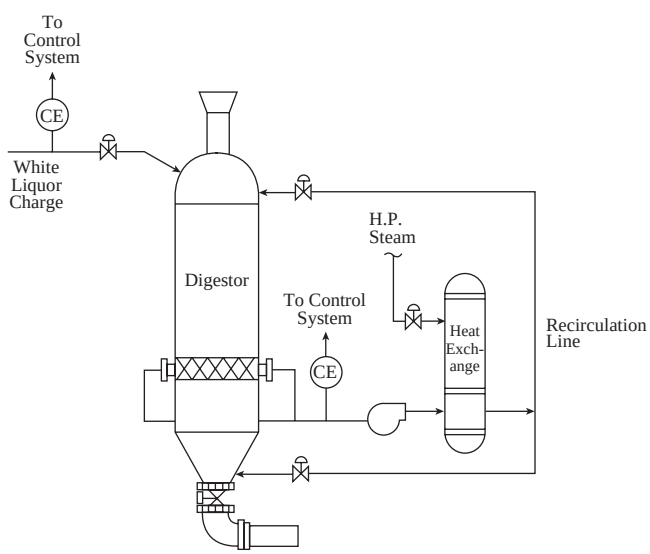

Fig. 8.17g
Example of conductivity measurement used in control of batch digestor for paper making.

© 2003 by Béla Lipták

TABLE 8.17h
Conductivity Applications

Process	*Application (Usage) and Comments*
Chemical streams	To measure and control solution strength.
Steam boilers	*Blowdown* is a method of lowering the amount of dissolved solids in a boiler by dilution. To control buildup of dissolved solids to prevent scaling and corrosion.
	Condensate return is usually checked for quality before being returned to the boiler. If out-of-limits, it is dumped.
Waste streams	A means of determining the amount of dissolved salts being discharged.
Cooling towers	*Bleed control* is a method of reducing the total dissolved solids in a tower by dilution (similar to blowdown). To prevent scaling and corrosion. For bleed control, the electrodeless conductivity system works best to minimize maintenance and failure.
Fruit peeling	Strong caustic is used, and its strength can be determined by conductivity.
Rinse water	Plating shop running rinse water is monitored for dissolved salts—a method of reducing water consumption.
Semiconductor rinse water	Requires ultrapure water, usually measured in mega-ohms/centimeter.
Interface determination	Usually used in food processing, e.g., dairy and brewing. Most commonly used in cleaning in place (CIP); interfaces in pipes are easily determined and can be diverted by valves controlled by conductivity.
Demineralizer output	Determination of ion exchange exhaustion.
Reverse osmosis	Efficiency of reverse osmosis (RO) operations is usually monitored by comparing inlet and outlet conductivity or TDS ratio (cell 1/cell 2). The inlet conductivity is installed upstream of the RO feed pump to avoid high-pressure requirements.
	Also, abnormal readings can be used to diagnose membrane fouling, improper flow rate, membrane failure, etc.
Desalination	Similar to reverse osmosis and demineralization process.
Deionization process	Conductivity or resistivity measurement provides capability for monitoring and controlling the acid and caustic dilution. Regeneration of deionizers requires consistent application of acid and caustic to obtain repeatable results. Savings is provided by consistent regeneration, which assures deionized water availability, less frequent regeneration, long resin life, and conservation of costly reagents.
	More precise control can be obtained by using conductivity ratio measurement. A comparison of inlet and outlet (ratio of cell 1/cell 2) conductivity across the bed can determine the unwanted ions and the need for bed regeneration, which can compensate and control for variations in mineral concentration of feed water.
Ion exchange	Occasionally loses resin. If a resin bead or fines are trapped between the electrodes of a cell, it is shorted and produces a very low resistivity (or high conductivity) reading. This feature is a great help in troubleshooting.

CALIBRATION AND MAINTENANCE

Calibration of Conductivity Sensors

Conductivity measurements can be calibrated using conductivity standards or on-line, by grab sample analysis. The conductivity sensor should be given sufficient time to reach the temperature of the standard solution, or in the case of on-line calibration, the sensors should be calibrated only after the process has been at a stable temperature for some time. By so doing, temperature compensation errors are eliminated, because the temperature element in the conductivity sensor will have had time to reach the same temperature as that of the standard or the process. This is especially important when using electrodeless sensors, which typically have a much larger mass than contacting sensors, and therefore require more time to reach thermal equilibrium.

Conductivity or resistivity measurements in high-purity water applications cannot be calibrated by using standards or calibrated on-line by using grab samples. This is because of the extreme sensitivity of the samples to contamination by trace amounts of electrolytes and even to atmospheric CO_2. It has been argued that the accuracy of calibrations, when using conductivity standards of less than 100 μS/cm, can be questionable.[9]

Therefore, the conductivity sensors on high-purity water applications should be calibrated by calibrating the input to the analyzer with precision resistors (usually done by the manufacturer) and using a conductivity sensor with a predetermined cell constant, which is then entered into the software of the analyzer by the user. Further calibrations are done using a certified reference conductivity system.

© 2003 by Béla Lipták

Maintenance of Conductivity Cells

Conductivity measuring systems may be designed to be trouble-free and produce reliable measurements; however, some maintenance is required, especially for the electrodes. In addition, the cell may require periodic cleaning depending on the type of application, the quality of the water passing through it, and the type of cell used. Some types of contaminants may not interfere directly with the measured conductivity—e.g., organic materials, rust, and suspended solids—but may form deposits on the electrode surfaces. In most cases, these surfaces can be cleaned with a bristle brush and a weak detergent solution.

Problems may also occur in hard-water applications, where gradual formation of scale will reduce the active area of the electrodes, which over a period of time will result in an apparent decrease in conductivity. For this type of fouling, simple brush cleaning is insufficient, as it will not remove scale from the cell. To remove the scaling, the electrode should be treated with a 10% solution of formic or hydrochloric acid. The presence of bubbles will indicate that the scale is being dissolved. It takes about 2 or 3 min and is complete when the bubble formation ceases. Then the cell should be thoroughly rinsed to remove all traces of acid before it is returned into the process.

Cells with stainless steel electrodes are generally used in applications where a low conductivity is combined with low concentrations of organic contamination. For high-purity water applications, titanium electrodes are used, because of their better performance characteristics in very low conductivity samples.

In applications where fouling or corrosion is anticipated, the need for cleaning can best be minimized by the use of electrodeless conductivity sensors.

CONCLUSION

Selecting the right conductivity cell includes having information on the cell constant for the analyzer, the conductivity range, the materials of construction selected to resist corrosion, and the appropriate mounting of the sensor.

When designing a conductivity measurement system, the first consideration is the conductivity range of the sample. In applications up to 20,000 μS/cm, typically contacting conductivity sensors are used. For higher conductivity ranges, or in samples that can foul or corrode the metal electrodes, electrodeless detectors are the best choice.

For conductivity measurements at 1 μS/cm and below, contacting conductivity sensors should be used in conjunction with a conductivity analyzer, which is provided with high-purity temperature compensation.

References

1. "The Measurement of Electrolytic Conductance," in *Handbook of Analytical Instrumentation*, Ewing, G. W., Ed., New York: Marcel Dekker, 1989.
2. ASTM D1125–82, "Standard Test Methods for Electrical Conductivity and Resistivity of Water," *1983 Annual Book of ASTM Standards*, Vol. 11.01, Philadelphia: American Society for Testing and Materials, 1983, pp. 149–156.
3. Braunstein, J. and Robbins, G. D., "Electrolytic Conductance Measurements and Capacitive Balance," *Journal of Chemical Education*, 48, pp. 52–59, 1971.
4. "Conductivity and Conductometry," in *Laboratory Techniques in Electroanalytical Chemistry*, Kissinger, P. T. and Heineman, W. R., Eds., New York: Marcel Dekker, 1984.
5. Anderson, F. P., Brookes, H. C., Hotz, M. C. B., and Spong, A. H., "Measurement of Electrolytic Conductance with a Four-Electrode Alternating Current," *Journal of Scientific Instruments (Journal of Physics E)*, Series 2, 2, pp. 491–502, 1969.
6. Light, T. S., *Chemtech*, August 1990, pp. 4960–4501.
7. Light, T. S., McHale, E. J., and Fletcher, K. S., "Electrodeless Conductivity," *Talanta*, 36, pp. 235–241, 1989.
8. Lavigne, J. R., *Instrumentation Applications for the Pulp and Paper Industry*, San Francisco, CA: Miller Freeman Publications, 1979.
9. Gingerella, M. and Jacanin, J. A., "Is There an Accurate Low-Conductivity Standard Solution?" *Cal Lab*, July–August 2000, pp. 29–36.

Bibliography

Bevilacqua, A. C., "Ultrapure Water: The Standard for Resistivity Measurements of Ultrapure Water," Semiconductor Pure Water and Chemicals Conference, Santa Clara, March CA, 2–5, 1998.

Gray, D. M. and Bevilacqua, A. C., "Cation Conductivity Temperature Compensation," International Water Conference, Pittsburgh, PA, November 1997.

Morash, K. R., Thornton, R. D., Saunders, C. H., Bevilacqua, A. C., and Light, T. S., "Measurement of the Resistivity of Ultrapure Water at Elevated Temperatures," *Ultrapure Water Journal*, 11(9), pp. 18–26, December 1994.

© 2003 by Béla Lipták

8.18 Consistency Analyzers

A. BRODGESELL (1969, 1982) **B. G. LIPTÁK** (1995)
M. H. WALLER (2003)

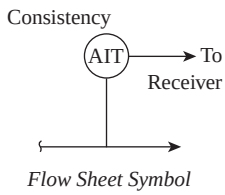

Flow Sheet Symbol

Types:	Blade, rotary, probe, optical, microwave, radiological
Element Materials:	Stainless steel and titanium
Normal Design Temperature:	Up to 250°F (120°C)
Normal Design Pressure:	Up to 125 PSIG (8.6 bars)
Range:	0.01 to 15% consistency
Sensitivity:	0.01 to 0.03% consistency
Repeatability:	0.5% of reading
Inaccuracy:	Function of empirical calibration, usually 1% of reading
Cost:	Laboratory units, $3000 to $10,000; continuous industrial units, $6000 to $30,000
Partial List of Suppliers:	ABB (www.abb.com) Berthold Technologies (www.berthold.com) BTG (www.teambtg.com) CyberMetrics (www.cyber-metrics.com) DeZurik/Copes-Vulcan (www.dezurik.com) Electron Machine Corp. (www.electronmachine.com) Honeywell (www.honeywell.com) Metso (www.metsoautomation.com) NDC Infrared Engineering (www.ndc.com) Ronan Engineering (www.ronan.com) Thermo MeasureTech (www.thermo.com) Thompson Equipment Co. (www.teco-inc.com)

INTRODUCTION

By definition, consistency is expressed as a percentage by dividing the mass of solid material by the total mass of a wet sample, resulting in units of mass per unit mass. Mechanically, consistency is the resistance to deformation or shear by fibrous materials, and thus is related to apparent viscosity. Such materials include wood pulp, dough, tomato paste, paint, gelatin, or drilling mud. This section will focus on those methods used for the measurement of consistency in the paper industry, involving pulp–water mixtures. In the laboratory, consistency is measured using a gravimetric method described in TAPPI Test Method T 240 om-88.[1] General industrial methods used for consistency measurement are described in a number of sources.[2–4]

In order to have good control over the basis weight of the paper product, it is necessary to maintain the consistency of the feed constant. An increase in temperature or an increasing inorganic materials content will reduce the viscosity, and thus apparent consistency, while increasing freeness (ability of the suspension to release water), increasing fiber length, or increasing pH will increase the apparent consistency. Pipeline

© 2003 by Béla Lipták

velocity also can influence the consistency reading for mechanical sensors and, therefore, it is advisable to measure consistency in turbulent locations at constant flow rate. Consistency is also related to turbidity and sludge or suspended solids detectors.

IN-LINE CONSISTENCY MEASUREMENT

Forty years ago, consistency was considered to be a mature measurement, almost totally relying on mechanical devices for shear force measurements in the 2 to 5% range. Today, we still rely on mechanical shear force measurements, but in addition, we have devices utilizing light scattering, light transmission, nuclear radiation, radio waves, and microwaves. Mechanical measurement devices might be categorized as either static (a fixed probe or blade) or moving (blades, rotating disks, or propeller). The development of high-intensity light-emitting diodes 25 years ago allowed further development of optical consistency sensors. These gauges relied on scattered or transmitted light for measurement up to 4% consistency.[5]

Several other approaches to consistency measurement have been attempted with varying degrees of success. Gamma attenuation devices measure consistency on the basis of density changes. Recent developments in plastic scintillation detector technology have improved sensitivity and stability.[6] Because the density difference between fibers and water is very small, high sensitivity is a must. Unfortunately, fillers are quite dense, and if present in the pulp, will yield a false high reading. Similarly, the presence of air will yield false low readings.

Microwave measurement techniques offer the promise of being independent of pulp type, fiber length, brightness, color, and flow rate. The most prevalent commercial technique is the measurement of propagation velocity, or time of flight through the stock, which is a function of the relative permittivity of the material. Because of the factor of 10 difference in the dielectric constant of water and wood fiber, velocity is a strong function of consistency. These microwave devices measure both fiber and filler, and compensation must be made for the filler amount and type. In addition, this method is sensitive to air, conductivity, and temperature, for which compensation must be made.

One commercial device quotes specifications of a measuring range up to 8% consistency (C), with a sensitivity and accuracy of 0.0005% C at a flow velocity in the range of 1 to 16 ft/sec (0.3 to 5 m/sec).[7] A similar microwave propagation technique uses the phase difference between an original wave and one that passed through the stock to determine consistency. This device is claimed to be resistant to the effects of contamination and bubbles, with a range of 1 to 10% consistency.[8]

Ideally, the complete process stream should be exposed to the sensor, but in very large flows this is not practical and, therefore, samples are taken. The sample should be taken from the center of the pipe, usually from the discharge of a centrifugal pump so that separation or settling of solids is minimized (Figure 8.18a).

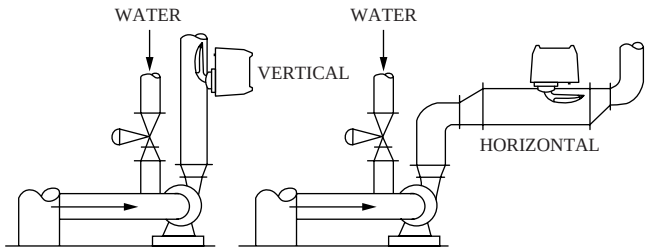

FIG. 8.18a
Installation of blade-type consistency transmitter in vertical and horizontal pipelines. (Courtesy of DeZurik/Copes-Vulcan.)

Mechanical Devices

These consistency-measuring instruments detect consistency of the process fluid as shear forces acting on the sensing element for consistencies greater than about 1%. In rotary devices, the shear force is reflected as the torque required to maintain the sensor at constant speed, as the imbalance of a strain-gauge resistance bridge, or as a turning moment. The instruments are calibrated in-line; thus, the output is not in terms of bone-dry consistency, but rather some arbitrary, reproducible value.

Stationary sensors depend on the process flow for measurement, and for such instruments, the output is affected by the velocity of the flow. For blade sensors, the sensor contour is designed to minimize flow effects on the output over the operating flow range. On the other hand, rotating sensors do not depend on process flow for a measurement. While these units are also sensitive to flow velocity variations, they generally can be used over wider flow ranges. In addition, the rotary motion of the sensor produces some self-cleaning action, whereas the fixed sensors depend on either a properly designed contour or an upstream deflector to prevent material hang-up.

Probe Type This sensor transmitter functions as a resistance bridge strain gauge. The bridge elements are bonded to the inner wall of a hollow cylinder that is inserted into the process. The shear force acting in the cylinder, due to the consistency of the process fluid, causes an imbalance of the resistance bridge. The amount of imbalance is proportional to the shear force and the consistency of the process fluid. The resistance bridge is powered from a recorder that also contains the AC potentiometer electronics. Pipeline velocity must be measured as compensating information, and a deflector in the pipe upstream of the probe prevents accumulation of strings and like material.[9]

The sensor is mounted through a threaded bushing furnished with the unit. Flowing velocity must be between 0.5 and 5.0 ft/sec (0.15 and 1.5 m/sec) in order to obtain repeatability, of around 0.1% of bone-dry consistency, up to 16%.

© 2003 by Béla Lipták

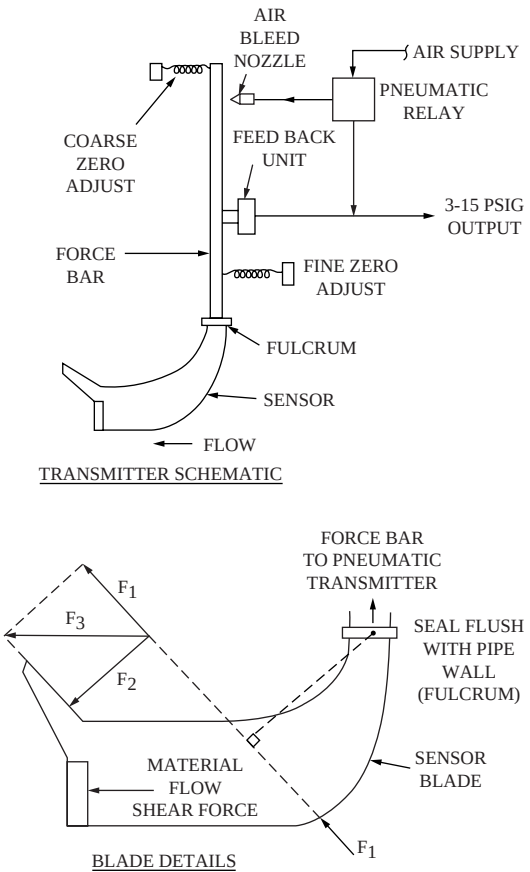

FIG. 8.18b
Stationary blade sensor and transmitter schematic. (Courtesy of Invensys Process Systems/Foxboro.)

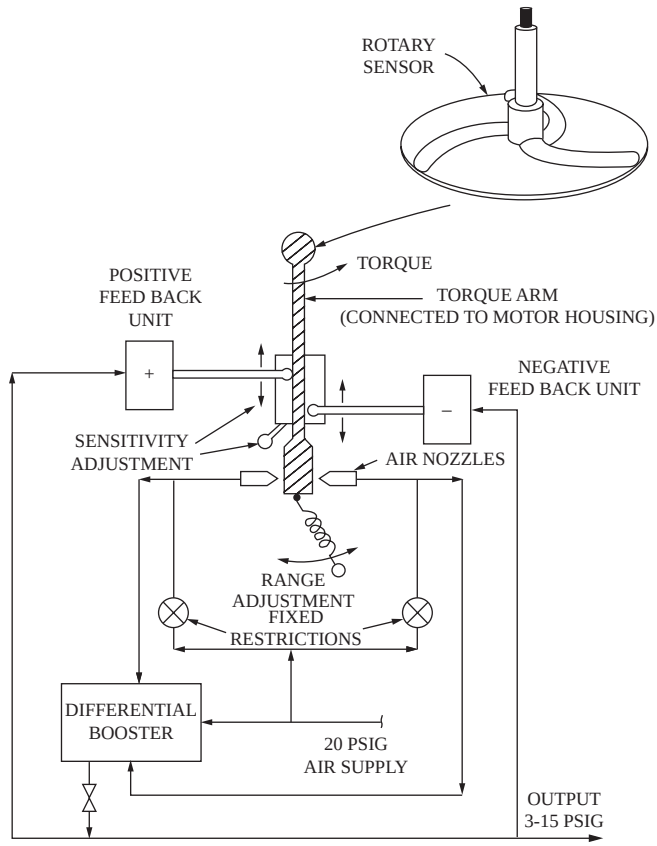

FIG. 8.18c
Air schematic of rotating sensor.

Blade Types The sensing element of this instrument is a fixed blade, specially shaped to minimize the effects of velocity. As shown in Figure 8.18b, material flowing past the blade, which is positioned along the line of flow, creates a shear force. Velocity of the process produces two drag forces, F_1 and F_2, whose resultant F_3 acts through the fulcrum. The moment arm of F_3 is therefore zero, and the effect of velocity on the measurement is negligible over a range of 0.75 to 5 ft/sec (0.23 to 1.5 m/sec).

Changes in consistency up to the 12% level are transmitted through the blade to the force bar, causing small changes in the relationship between flapper and nozzle. Therefore, the relay unit output pressure changes until the force due to the feedback unit balances the shear force. The instrument can be mounted on any line 4 in. (100 mm) or larger. Mounting is through a 2-in. (50-mm) flange supplied with the instrument. Most new instruments use electronic systems for force measurement, replacing pneumatic devices.

Moving-blade devices stroke the blade, cutting across the flow in the plane of the blade, measuring the time required to complete the stroke. Higher consistencies will require a longer time, and vice versa. Compensation for velocity is affected by a deflector mounted upstream.

Rotating Sensors This unit consists of a motor-driven, ribbed disk immersed in the process fluid. The disk is rotated at constant speed, and variations in torque output by the motor are sensed by a torque arm. The motor is suspended by flexure bearings and anchored to the torque arm, which senses motor reaction torque. The tip of the torque arm is located between two air nozzles so that minute movements of the arm, caused by torque variations, are reflected as changes in two air output pressures (Figure 8.18c). The nozzle pressures are fed back to bellows that react to the torque arm movement by exerting an opposing force until equilibrium is reached between increased nozzle pressure and the force exerted by the torque arm. In many cases, electronic systems for torque measurement have replaced pneumatic devices.

Although this unit is less sensitive to flow changes than the strain gauge and force balance types, problems are introduced by the shaft seal required for this design. The torque variations must reflect only consistency changes and, therefore, shaft friction variations are detrimental to the measurement.

One of the latest mechanical transmitters has the appearance of two blades on a rotating disk. It is claimed to measure torque and consistency from 1 to 14% on an absolute basis by operating on the pulp while in plug flow. The establishment

© 2003 by Béla Lipták

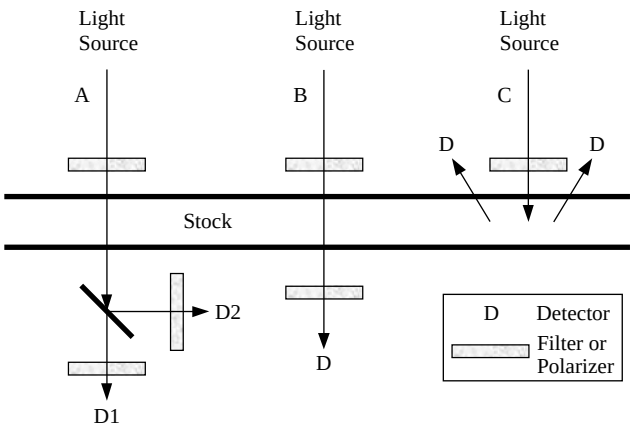

FIG. 8.18d
A variety of optical sensors.

of plug flow requires a calming length (L) determined from the following equation:[10]

$$L = R/[7\ D\%C] \qquad \textbf{8.18(1)}$$

where

L is in feet
R is flow in gallons per minute
D is pipe diameter in inches
%C is percent consistency

Optical Sensors

The range of these measurements is generally 1% and below for transmission devices, and up to 4% for reflection sensors. Accordingly, optical devices, either in transmission or scatter mode, are the sensors of choice for low consistencies, relying on the fiber's interaction with light, as shown in Figure 8.18d for three types of sensors.

Sensor A uses linearly polarized light from either a halogen bulb or a semiconductor laser, which is passed through the measurement cell. The transmitted light is split into two beams, one passing through a second transverse-plane polarizing filter, the other passing through a third in-plane polarizing filter. The beams are detected by photodiodes and combined to produce a relative depolarization signal, which is a function of the total fiber and filler. The signal is insensitive to brightness, color, freeness, or soluble additives.

Sensor B is based on the transmittance of light as a function of consistency. Unfortunately, this sensor is relatively sensitive to changes in freeness and color, exhibiting nonlinear behavior with changes in filler and dissolved solids.

Sensor C uses forward- and backscattered light to produce a signal combined from the several detectors that is proportional to consistency. This type of sensor can be used at much higher consistencies (ca. 4%), and, in general, its sensitivity to variations in the content of nonfibrous substance lies between that of sensors A and B. The exception to this rule is filler, for which this sensor is the most sensitive.[11]

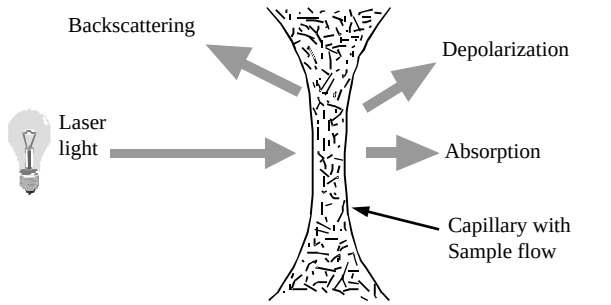

FIG. 8.18e
Measurement principle of the kajaaniRM-200 C for woodfree pulp. (Courtesy of Metso Automation.)

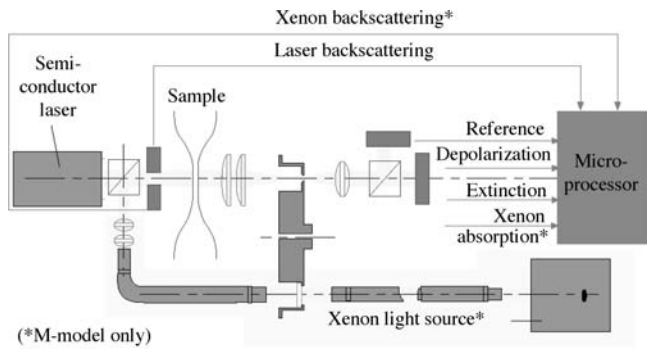

FIG. 8.18f
The kajaaniRMi for wood-containing pulp. (Courtesy of Metso Automation.)

Measuring Woodfree Pulp Optical sensors are frequently used to manage retention on a paper machine by measuring the total consistency at the head box and in the machine white water early and late in the forming zone. One such device, the kajaaniRM-200 C, is illustrated in Figure 8.18e.

This device is similar to sensor A in Figure 8.18d, in that a polarized light beam is directed through a glass capillary cell, where the sample continuously flows. The transmitted light is directed through a special aperature disk for scattering measurements, and then through a second polarizer, which splits the light into cross-polarized and parallel-polarized components that are detected by photodiodes. The depolarization signal mainly indicates the total consistency of the sample, and the attenuation of light is affected by the total consistency and filler consistency. Attenuation is strongly affected by scattering and light absorption. Since backscattering and attenuation are influenced by small particles, filler consistency is calculated from these signals.[12]

Consistency of Pulp Containing Wood For pulp containing a considerable amount of mechanical fibers, and thus a large fraction of lignin, the depolarization scheme loses effectiveness. Another sensor has been developed that uses two light sources and a combination of optical measurement principles, including depolarization, absorption, and scattering at several wavelengths from the ultraviolet (UV) to the near infrared (NIR). An outline of this sensor is shown in Figure 8.18f.

© 2003 by Béla Lipták

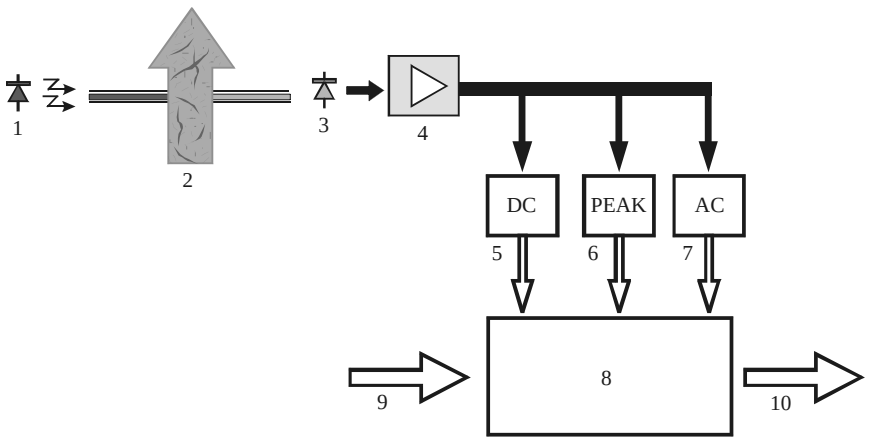

1 Light source
2 Suspension
3 Detector
4 Amplifier
5 DC filter
6 Peak detector
7 AC filter
8 Computer
9 Input signals
10 Output signals

FIG. 8.18g
The BTG Wet-end Consistency Analyzer. (Courtesy of BTG Pulp and Paper Technology AB.)

The near-IR semiconductor laser light is polarized, passed through the cell, and then depolarized, as before, in Figure 8.18e. UV light from the xenon lamp is directed through the cell via a filter and polarizing prism. The forward-scattered light is directed through the lens and aperature disk to photodiodes. Backward scattering is also measured for both the UV and IR lights by detection with a photodiode before the cell. Light extinction, as well as backward and forward scattering, is measured at several different wavelengths. The signals are processed to monitor total solids and filler consistencies and flocculation in the sample.[13]

Figure 8.18g shows the components of an analyzer with a sensing scheme that is similar to sensor A in Figure 8.18d, while Figure 8.18h describes a typical signal trace from this analyzer. A light beam is directed at the suspension, and a photo detector senses the transmitted light. Three independent filters process the detector signal. The first filter determines the mean value V_{DC} of the transmitted light; the second determines the peak value V_P; and the third extracts the AC component V_{AC} of the signal.[14]

The peak method used in the analysis assumes that the suspension is substantially characterized by large and small particles. The large particles (fibers) form a relatively transparent network within which the much greater number of smaller particles (fillers and fines) float freely. Observation of a typical suspension over time reveals that the great number of small particles is relatively constant, whereas the number of large particles is few and variable. The average value of the transmitted light determines V_{DC}.

Deviations from this mean value are mainly due to the large particles passing through the light beam. The highest light intensity and V_P occur when no fibers are passing through the beam and the light is being dimmed only by the suspended fine particles. Thus, the respective amounts of large and small particles in the suspension can be determined by the mean and peak values.[15]

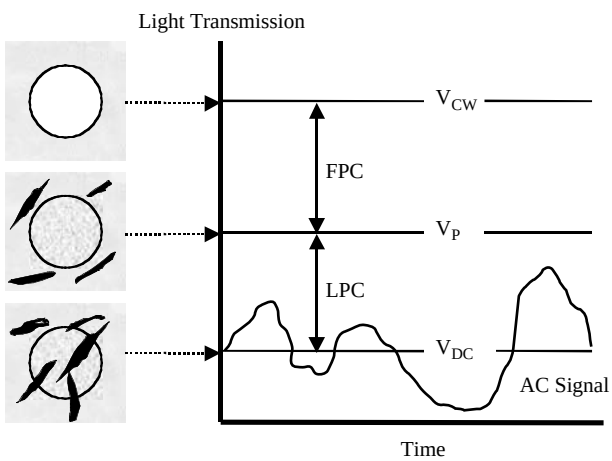

FIG. 8.18h
A sample signal trace from the BTG Wet-end Consistency Analyzer. (From Wold, D., "The Peak Method of Optical Analysis Realizes the Benefits of Low-Consistency Measurement," in UpTimes, No. 5, Säffle, Sweden: BTG Pulp and Paper Technology, 1999, pp. 24–25.)

Referring to Figure 8.18h, V_{CW} is the detector signal for clear water and is used as a reference value. The AC signal, V_{AC}, is plotted along with V_{CW}, V_P, and V_{DC}. The large particle content (LPC) is the difference between V_P and V_{DC}, while the fine particle content (FPC) is the difference between

© 2003 by Béla Lipták

V_{CW} and V_P. The total consistency is obtained by summing LPC and FPC.

The consistency measurement at 30% for TMP or CTMP pulp is based on dielectric measurement of the water content and an optical measurement using an NIR technique with reflectance spectroscopy. This technique is based on the resonance vibration of water, which appears as absorption bands in the infrared region of the spectrum. A typical sensor uses four fixed wavelengths of the spectrum—two located in the absorption bands of water and two in a region where the effect of water is minimal.[16]

SUMMARY

While convenient from an installation standpoint, mechanical in-line instruments are all sensitive to flow variations. Fixed sensors are more likely to be plagued by material buildup, particularly if the sample contains fibers. Rotating sensors are self-cleaning because sensor motion will tend to spin off any material; however, variations in shaft seal friction can be troublesome. The newer optical sensors have found great utility at low consistencies, and the search for alternative methods for consistency measurement continues.

References

1. *Consistency (Concentration) of Pulp Suspensions*, T 240 om-88, TAPPI Test Methods, 1, Atlanta, GA: TAPPI Press, 1988.
2. Jansson, I., Ed., *Accurate Consistency*, Säffle, Sweden: BTG Pulp and Paper Technology AB, 1999.
3. Ostroot, G. F., *The Consistency Control Book*, Atlanta, GA: TAPPI Press, 1993.
4. Waller, M. H., *Measurement and Control of Paper Stock Consistency*, Instrument Society of America Monograph 5, Research Triangle Park, NC: ISA, 1983.
5. Jack, J. S., Bentley, R. G., and Barron, R. L., "Optical Pulp Consistency Sensors," *Pulp & Paper Canada*, 91(2): T76–80, 1990.
6. Petersen, D. E., "Nuclear Density Consistency Meter Evaluation," *Proceedings, 1994 Process Control Symposium*, Atlanta, GA: TAPPI Press, 1994, pp. 9–12.
7. "MIC-2300 Consistency Sensor," Data Sheet D2009/0en, BTG Pulp and Paper Technology AB, Säffle, Sweden, 2000.
8. "Consistency Sensor," http://www.cyber-metrics.com/consiste.htm, CyberMetrics, Alpharetta, GA, 1998.
9. Thompson, H. A., "Consistency Control, Medium and High Range," *1986 Engineering Conference Proceedings*, Atlanta, GA: TAPPI Press, 1986, pp. 593–596.
10. Preikschat, E., "ISO-Torq: The Next Generation of Rotating Consistency Transmitters," *TAPPI Journal*, 82(7): 133–139, 1999.
11. Reed, H. W. and Corbett, J. O., "Optical Consistency Measurement," in *Instrumentation in the Pulp & Paper Industry*, Research Triangle Park, NC: Instrument Society of America, 1985, pp. 21, 25–35.
12. Kaunonen, A., Lehmikangas, K., Nokelainen, J., and Tikkanen, P., "Practical Experiences of How to Control Wet End Operations Using Continuous Retention Measurement," *Proceedings, 1991 Papermakers Conference*, Seattle, WA, April 8–10, 1991, Atlanta, GA: TAPPI Press, 1991, pp. 39–45.
13. Kaunonen, A., "Improving Runability and Quality through Consistency Measurement and Control," *Paper Technology*, 38(3): 41–48, 1997.
14. Wold, D., "The Peak Method of Optical Analysis Realizes the Benefits of Low-Consistency Measurement," in *UpTimes*, No. 5, Säffle, Sweden: BTG Pulp and Paper Technology, 1999, pp. 24–25.
15. Shaw, P. and Fladda, G., "A Modern Approach to Retention Measurement and Control," *Paper Technology*, 34(3): 36–40, 1993.
16. "High Consistency Measurement, above 30%," http://www.consistency.com/templates/main.cfm?id=616.

Bibliography

Balls, B. W., "Towards Better Understanding of Consistency Measurements," *Measurement Control*, Vol. 1, No. 9, September 1968.

Casey, J. P., Ed., *Pulp and Paper: Chemistry and Chemical Technology*, 3rd ed., Vol. 1, New York: Wiley, 1980.

Cooper, H. R., "Using On-Stream X-Ray Fluorescence for Slurry Composition Analysis," *InTech*, July 1981.

Denny, R. and Sinclair, R., *Visible and Ultraviolet Spectroscopy*, New York: John Wiley & Sons, 1987.

Dykes, J. T., "Consistency Installations and System Design Techniques," *TAPPI*, 46(11): 680, 1963.

Ewing, G., *Analytical Instrumentation Handbook*, New York: Marcel Dekker, 1990.

McGill, R. J., *Measurement and Control in Papermaking*, Bristol, England: Adam Hilger, 1980.

Nassau, K., *The Physics and Chemistry of Color*, New York: John Wiley & Sons, 1983.

Staff, *A Consistency Manual*, Process Control Committee, Technical Section, Montreal, Canada, June 1967.

Torborg, R. H., "Fine Tuning of a Consistency Control System for Maximum Performance," *Pulp Paper*, March 1980, pp. 134–138.

Waller, M. H., "Measurement and Control of Paper Stock Consistency," ISA Conference, Houston, TX, October 1992.

© 2003 by Béla Lipták

8.19 Corrosion Monitoring

D. H. F. LIU (1995) **B. G. LIPTÁK** (2003)

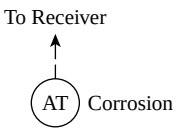

Flow Sheet Symbol

Type:	A. Electric resistance B. Linear polarization resistance
Design Pressure:	A. Up to 6000 PSIG (422 bars)
Design Temperature:	A. Up to 1000°F (560°C)
Materials of Construction:	Wide range of corrosion-resistant metals or alloys
Cost:	$3000 to $5000
Partial List of Suppliers:	Accurate Corrosion Monitoring Co. (www.acm-corrosion.com) ACM Instruments (www.acminstruments.com) Arizona Instrument (www.ariz.com) CMS Corrosion Monitoring (www.a-bau.co.at/cms-e.htm) Cormon (www.cormon.com) CorrOcean (www.corrocean.com/fsmcorrmon) Cosa Instrument Corp. (www.cosa-instrument.com) Dasibi Environmental Corp. (www.dasibi.com) Endevco (www.endevco.com) InterCorr International Inc. (www.intercorr.com) Purafil Inc. (www.purafil.cpm) Rohrback Cosasco Systems (www.corrpro.com/rcs/whatis.htm) Waltron Ltd.

INTRODUCTION

A detailed tabulation of the chemical resistance of materials is given in Appendix 3 of this volume. A more condensed summary of the corrosion resistance of some widely used materials is also given in Table 8.19a. In selecting the materials of construction for instruments, one should also keep in mind that most process fluids are not pure and that the rate of corrosion is also a function of flow velocity and of dissolved oxygen content.

Nondestructive testing, such as ultrasonic scanning, is also used in inspecting storage tanks, pressure vessels, and piping. If the plant's atmosphere contains corrosive gases, it is also desirable to enclose, purge, or otherwise protect the more sensitive instruments or their components. In such installations it is advisable to protect the stems of control valves by boots.

Corrosion monitoring can be based on 30- or 60-day coupons, which provide data only on the average rate of corrosion. Mobile monitoring laboratories can provide spot checks, or in the more critical cases, permanent monitoring equipment can be installed to provide continuous corrosion rate and pitting tendency readings. In cooling systems, where chlorine is used to control biological deposition, corrosion monitoring is needed because if the chlorine residual is too high, corrosion will occur.

CORROSION MONITORING TECHNIQUES

A variety of corrosion monitoring techniques are listed in Table 8.19b. These can monitor total corrosion, corrosion rate, and the state of corrosion. Some of them can also determine the composition of products and detect the presence of defects or changes in physical parameters. However, any monitoring technique can provide only limited information, and the techniques should be regarded as complementary rather than competitive. Where more than one technique can

© 2003 by Béla Lipták

TABLE 8.19a
Corrosion and Cavitation Resistance of Various Materials

Trim or Valve Body Material	*Relative Cavitation Resistance Index*	*Approximate Rockwell C Hardness Values*	*Corrosion Resistance*	*Cost*
Aluminum	1	0	Fair	Low
Synthetic sapphire	5	Very high	Excellent	High
Brass	12	2	Poor	Low
Carbon steel, AISI C1213	28	30	Fair	Low
Carbon steel, WCB	60	40	Fair	Low
Nodular iron	70	3	Fair	Low
Cast iron	120	25	Poor	Low
Tungsten carbide	140	72	Good	High
Stellite 1	150	54	Good	Medium
Stainless steel, type 316	160	35	Excellent	Medium
Stainless steel, type 410	200	40	Good	Medium
Aluminum oxide	200	72	Fair	High
K-Monel	300	32	Excellent	High
Stainless steel, type 17-4 PH	340	44	Excellent	Medium
Stellite 12	350	47	Excellent	Medium
Stainless steel, type 440C	400	55	Fair	High
Stainless steel, type 329, annealed	1000	45	Excellent	Medium
Stellite 6	3500	44	Excellent	Medium
Stellite 6B	3500	44	Excellent	High

TABLE 8.19b
Instrumentation for Corrosion Monitoring

Method	*Measures or Detects*
Corrosion coupon	Average corrosion rate over a known exposure period by weight loss
Linear polarization	Corrosion is measured by electrochemical polarization resistance method
Electric resistance	Metal loss is measured by the resistance change of corroding metal element
Analytical	pH of process stream
Radiography	Flaws and cracks by penetration of radiation and detection on film
Ultrasonics	Thickness of metal and presence of cracks, pits, etc., by changes in response to ultrasonic waves
Eddy current testing	Use of a magnetic probe to scan surface
Hydrogen sensing	Hydrogen probe used to measure hydrogen gas liberated by corrosion
Analytical	Concentration of corroded metal ions or concentration of inhibitor; oxygen concentration in process stream
Potential monitoring	Potential change of monitoring metal with respect to a reference electrode

provide the information required, such a cross-check can be very valuable, and their differences can add to their value.

This section focuses on coupon monitoring and on two frequently used on-line corrosion monitors: 1) the electric resistance monitors, and 2) the linear polarization resistance (LPR) monitors.

Coupon monitoring provides long-term performance data on general corrosion and information on localized corrosion. Electric resistance monitors give medium- to long-term data on general corrosion or erosion. LPR monitors provide real-time operational data on general corrosion and enable engineers to study the dynamics of the corroding system and to observe the effects of the addition of various corrosion inhibitors.

CORROSION COUPON MONITORING

Coupons are the simplest and most frequently used devices in the monitoring of corrosion. Coupons are small pieces of metals, usually of a rectangular shape, which are inserted in the process stream and are removed after a period for study. Specimens for standard corrosion, stress corrosion, crevice corrosion, and galvanic corrosion tests are shown in Figure 8.19c.

The most common use of coupons is to determine average rate of uniform corrosion over the period of exposure. The coupon or specimen is weighed before and after exposure. The average corrosion rate is calculated from the weight loss, the initial surface area, and the time exposed. The rate is usually expressed in mils per year (mpy) (1 mil = 0.001 in.) or millimeters per year (mmpy), since corrosion is generally a long-term effect.

© 2003 by Béla Lipták

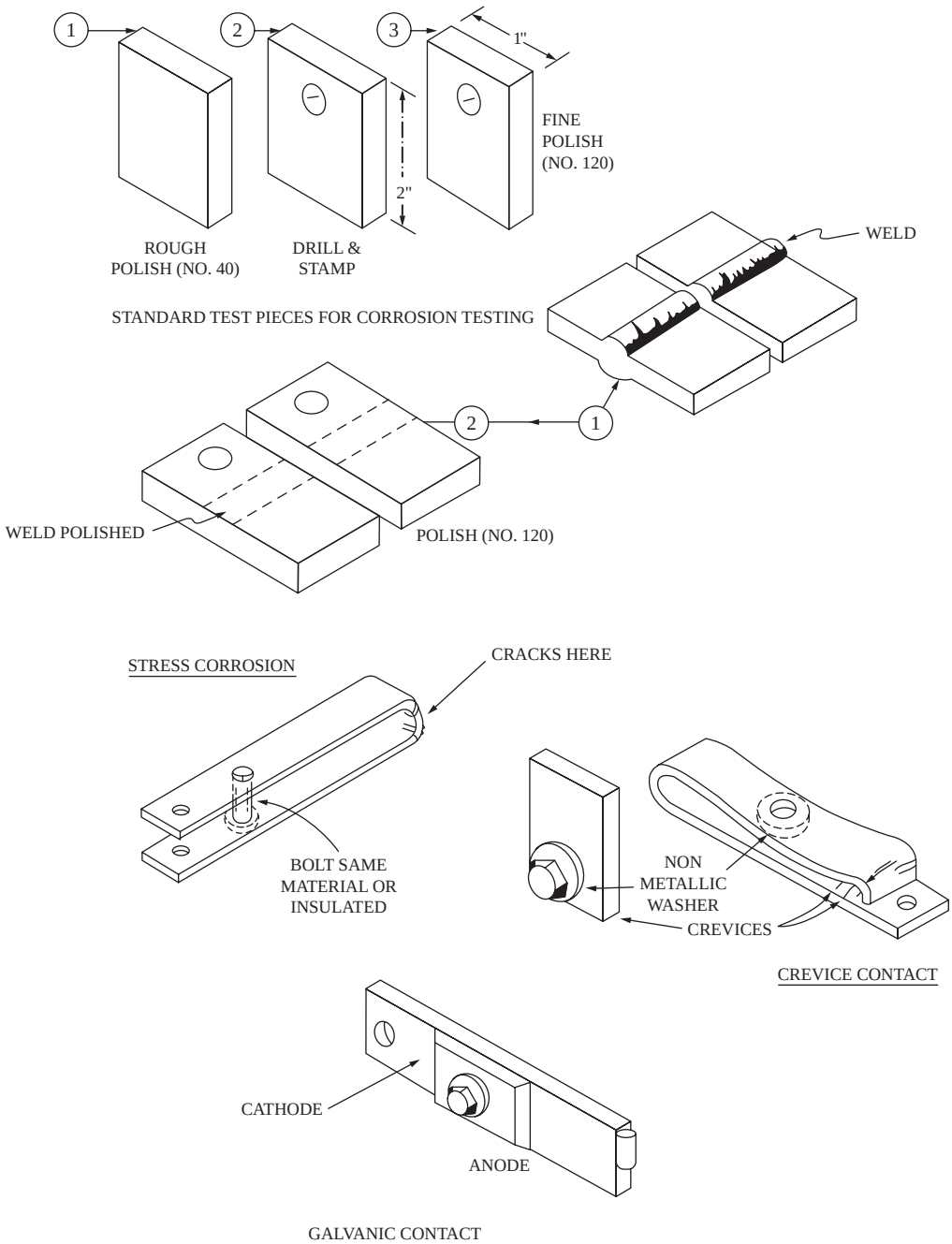

FIG. 8.19c

Specimens for standard corrosion, stress corrosion, crevice corrosion, and galvanic corrosion tests.

Improper cleaning of coupons or specimens after exposure is the main source of error in determining the corrosion rate. American Society for Testing and Materials (ASTM) Standard 61–81 describes the recommended practice for preparing, cleaning, and evaluating test specimens. In addition, Fontana and Greene (see bibliography) have useful information, particularly on techniques for sample cleaning after exposure.

The measurement of the depths even of extremely shallow pits is important. Pit depth should be measured to an accuracy of 1.0 mil using a micrometer.

Time of Exposure

Proper selection of the time the sample will be exposed is critical. In batch processes that involve cyclic exposure conditions, the coupon should undergo all of the batch conditions, including periods of shutdown. Exposure should be made for two or more complete cycles of operations to ensure that an equivalent of 2 weeks exposure time is obtained. Usually a 2-week test is acceptable, but a 1-month test is preferable.

© 2003 by Béla Lipták

Normally, initial corrosion rates are high, because as the corrosion products form, they tend to protect the surface and, as a consequence, the corrosion rate will drop below the initial rate. Therefore, it will be necessary to conduct tests of sufficient duration to compensate for this effect.

Advantages and Limitations

Advantages of the coupon monitoring technique are as follows:

1. The technique is suitable for all environments.
2. Coupons provide information about the type of corrosion present. Coupons can be examined for evidence of pitting and other localized forms of attack.
3. There are a variety of coupons available for specialized analysis.

Limitations of the technique are as follows:

1. High corrosion rates for short periods of time may be undetectable and cannot be correlated to process upset conditions.
2. The technique requires plant shutdowns for installation or removal. Highly qualified personnel and reasonably sophisticated test procedures are required for the interpretation of the results.

ELECTRICAL RESISTANCE MONITORS

Figure 8.19d is a simplified diagram of an electric resistance corrosion monitor. It shows a probe that has both an exposed measuring element and a protected reference element. They are connected to a Wheatstone bridge measuring an output circuit, and a power supply.

The measuring element is a loop of wire that is exposed to the corrosive environment. The reference element is encapsulated inside the probe body by a thermally conductive plastic so that it will be at the process temperature. The output is directly proportional to the resistance of the thin-wire measuring element, because as corrosion increases, it causes the thickness of the measuring element to decrease (Figure 8.19e).

Advantages and Limitations

Electrical resistance monitors are basically automatic coupons, and they share many characteristics with coupons when it comes to advantages and limitations. The resistance probe must be allowed to corrode for a period of time before accurate corrosion measurements can be made.

Advantages of the electric resistance technique are as follows:

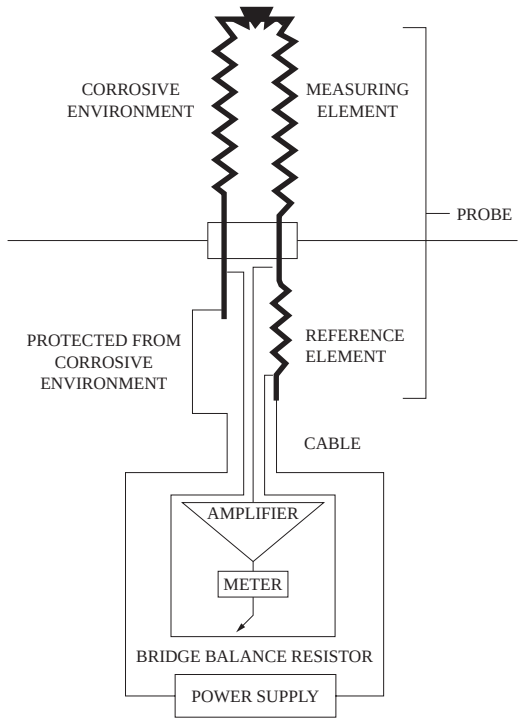

FIG. 8.19d
Basic diagram of electric resistance corrosion monitor with wire loop probe. (Courtesy of Rohrback Instruments.)

1. The technique is suitable for all environments except liquid metals or some conductive molten salts. The process material, which causes the corrosion, need not be an electrolyte (in fact, it need not be a liquid).
2. A corrosion measurement can be made without having to see or remove the test sample.
3. Corrosion measurements can be made quickly—in a few hours or days—or continuously. Sudden increases or decreases in corrosion rate can be detected, so that the user can modify the process to reduce the corrosion.
4. The method can detect low corrosion rates that would take a long time to detect with weight-loss methods. Its accuracy is comparable to the coupon method.

Limitations of the technique are as follows:

1. The technique is usually limited to the measurement of uniform corrosion only and is not generally satisfactory for localized corrosion.
2. The probe design includes provisions for temperature variations. This feature is not totally successful. The most reliable results are obtained in constant-temperature systems.
3. The technique does not provide an instantaneous corrosion rate, so any corrective actions must be delayed until an average corrosion rate can be determined.

© 2003 by Béla Lipták

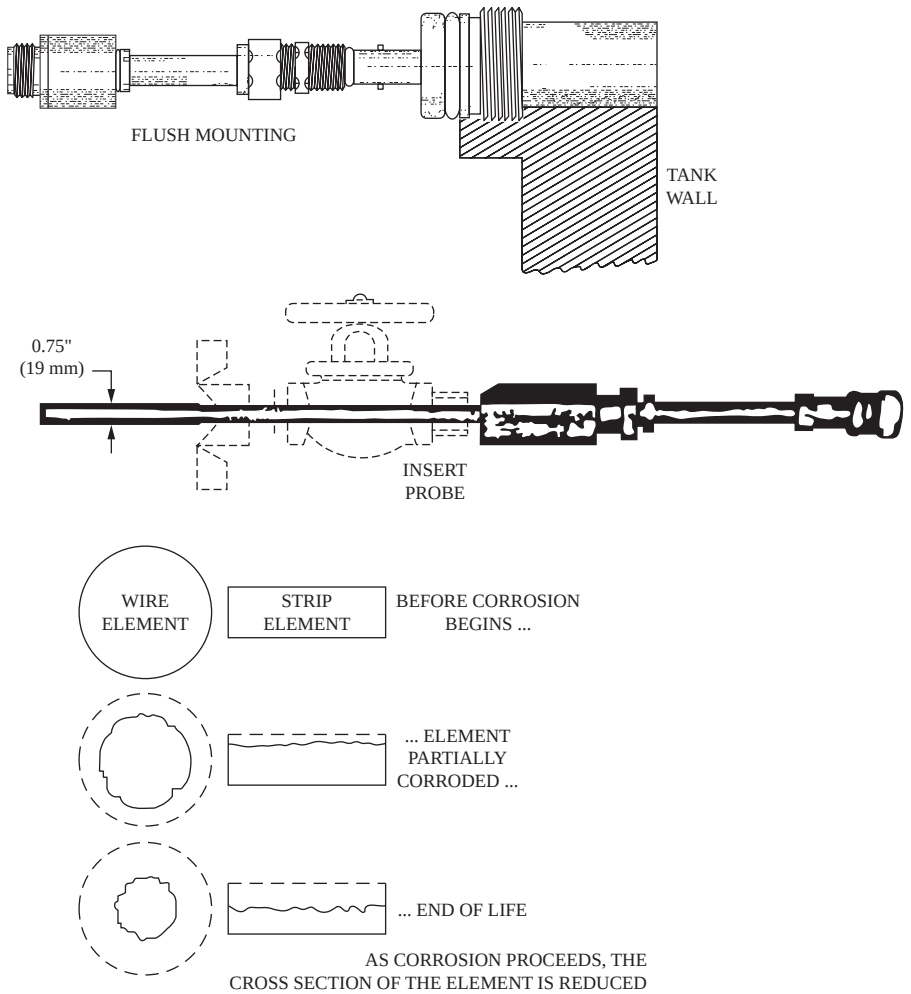

FIG. 8.19e
Probe configurations of corrosion sensors.

4. The resistance method measures a combination of chemical and physical erosion without distinguishing between the two.

LINEAR POLARIZATION RESISTANCE MONITORS

Figure 8.19f shows a three-electrode and a two-electrode linear polarization system. In addition to the electrodes, the three-electrode system includes an ammeter, a voltmeter, and an adjustable current source. The meters have adjustable null features to compensate for normal variations in the surface conditions of the test and reference electrodes.

A small electrical current flows between the test and auxiliary electrodes. Because corrosion occurs at the anode, the test electrode is protected when it is the cathode. The direction of current flow is then reversed, and the test electrode becomes the anode and its corrosion rate is accelerated. The change in corrosion rate caused by the reversal in current causes a change in potential of the test electrode when compared to the freely corroding reference electrode. The relationship between the change in current flow (dI), the change in polarization voltage (dE), and the corrosion rate (CR) of the test electrode is as follows:

$$CR = K\frac{dI}{dE} \qquad \textbf{8.19(1)}$$

Since all corrosion measurements are made at a constant polarization potential of 10 mV, the voltage term becomes constant, so the corrosion equation can be reduced to

$$CR = KI \qquad \textbf{8.18(2)}$$

Under constant polarization voltage, the corrosion rate is directly proportional to the current required to produce that polarization voltage. A value representing the K factor is

© 2003 by Béla Lipták

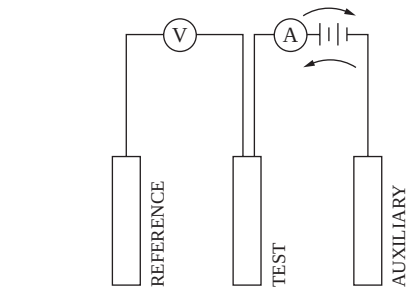

3 ELECTRODE SYSTEM POLARIZED BY 10 mv ANODICALLY AND CATHODICALLY COMPARED TO REFERENCE ELECTRODE.

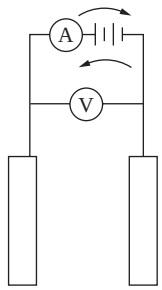

2 ELECTRODE SYSTEMS IMPRESS A 2 mv DIFFERENCE BETWEEN THE TWO ELECTRODES. IT IS ASSUMED THAT ONE ELECTRODE IS SHIFTED 10 mv ANODICALLY AND THE OTHER 10 mv CATHODICALLY. MEASUREMENTS CAN BE MADE IN EITHER DIRECTION.

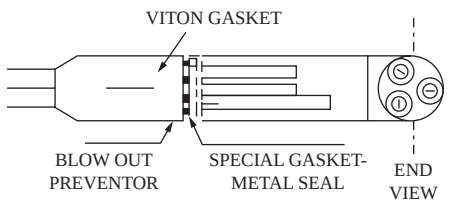

3-ELECTRODE ASSEMBLY

FIG. 8.19f
Linear polarization probes.

designed into the equipment so that the readings are linear and calibrated directly in mils per year.

Advantages and Limitations

Advantages of the linear polarization resistance technique are as follows:

1. The polarization probes measure corrosion rate almost instantaneously. They measure the instantaneous corrosion rate instead of the average corrosion rate.
2. The probes are useful for comparing relative corrosion rates. Thus, it is possible to use the data to determine the process variables that give the lowest corrosion rates.
3. The commercially available polarization probes supply pitting tendency information.

Limitations of the technique are as follows:

1. The probes will not work in nonconductive fluids or fluids containing compounds that coat the electrodes (e.g., crude oil).
2. The absolute accuracy of the corrosion measurement is not as reliable as the one obtained from corrosion coupons.
3. The method measures the combined rate of any electrochemical reactions at the surface of the test sample. If reactions other than corrosion reactions are possible at comparable or greater rates, the measured rate will also include these other reactions.

Bibliography

ASTM Standard 61-81, "Recommended Practice for Preparing, Cleaning, and Evaluating Corrosion Test Specimens," 3(2), Philadelphia, PA: American Society for Testing and Materials, 1983, p. 87.

Clansky, K. B., "The Chemical Guide to OSHA Hazard Communication Standard," Roytech, revised annually.

Corrosion Handbook, Coxmoor Publ. Co., 2000.

Fontana, M. G. and Greene, N. D., *Corrosion Engineering,* New York: McGraw-Hill, latest edition.

Moran, G. C., "*Corrosion Monitoring in Industrial Plants,*" West Conshohocken, PA: American Society for Testing and Materials, 1986.

Moreland, P. J. and Hines, J. G., "Corrosion Monitoring: Select the Right System," *Hydrocarbon Processing,* 57 (11), 1978, pp. 251–255.

Perry, R. H., Ed., *Chemical Engineers Handbook,* New York: McGraw-Hill, 7th edition, 1997.

Rohrback Cosasco Systems, Inc., "Corrosion Monitoring Primer," Bulletin 901, Santa Fe Springs, CA, 1989.

Schweitzer, P., *Corrosion Resistance Tables,* New York: Marcel Dekker, 1986.

© 2003 by Béla Lipták

8.20 Differential Vapor Pressure Sensor

B. G. LIPTÁK (1995, 2003)

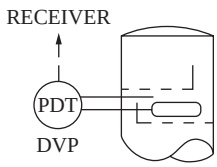

Flow Sheet symbol

Purpose:	Compare vapor pressure of reference fluid to that of process fluid
Wetted Parts:	316 stainless steel
Typical Ranges:	From 10–0–10 in. H_2O (254–0–254 mm H_2O) up to 425–0–425 in. H_2O (10.8–0–10.8 m H_2O)
Maximum Working Pressure:	1500 PSIG (105 bars)
Maximum Working Temperature:	250°F (121°C)
Ambient Effect:	1% or less per 100°F (55°C)
Repeatability:	0.1% of span
Dead Band:	0.1% of span
Inaccuracy:	0.5% of span (better with microprocessor-based transmitters)
Cost:	The sum of the cost of a d/p transmitter (about $1500), a temperature bulb, and the cost of attaching and filling the bulb with the desired reference fluid; total cost about $2500
Partial List of Suppliers:	Not manufactured as a complete unit. Any d/p transmitter can be converted to act as a differential vapor pressure transmitter by connecting a thermal bulb filled with a reference fluid to one side of the transmitter. For suppliers of d/p transmitters, refer to Section 5.6.

INTRODUCTION

Vapor pressure is the pressure that a vapor exerts when it is in equilibrium with its own liquid. At a constant temperature, the vapor pressure is just as unique a characteristic of a liquid as is its boiling point (Table 8.20a). Therefore, by measuring the vapor pressure of a fluid, one can determine the composition of that fluid.

If the temperature of the process varies, temperature compensation is needed. With microprocessor-based, smart instruments, such compensation is easily provided, if the relationship between vapor pressure and temperature is entered into the compensation software (Figure 8.20b).

DESIGN AND OPERATION

The differential vapor pressure transmitter is a d/p cell with one of its sides connected to a temperature bulb filled with a reference fluid (Figure 8.20c), while the other side is connected to the process. This way the sensor can continuously compare the vapor pressure of the process material with the vapor pressure of the sealed-in reference fluid.

If the reference bulb is inserted into the process, the need for temperature compensation can be eliminated. This way the temperature of the reference fluid is always the same as that of the process. Consequently, if the two compositions are the same, their vapor pressures will also be identical.

© 2003 by Béla Lipták

TABLE 8.20a
Refrigerant Characteristics

		Feature								
Refrigerant		*Applicable Compressor (R = Reciprocating, RO = Rotary, C = Centrifugal)*	*Boiling Point in °F[a] at Atmospheric Pressure*	*Evaporator Pressure in PSIA[b] if Operating Temperature is 5°F (–15°C)*	*Condenser Pressure in PSIA[b] if Operating Temperature is 86°F (30°C)*	*Latent Heat in BTU/lbm[c] at 18°F (– 7.8°C)*	*Toxic (T), Flammable (F), Irritating (I)*	*Mixes and/or Compatible with the Lubricating Oil*	*Chemically Inert and Noncorrosive*	*Remarks*
Ethane	C_2H_6	R	–127	236	675	148	T, F	No	Yes	For low-temperature service
Carbon dioxide	CO_2	R	–108	334	1039	116	No	Yes	Yes	Low-efficiency refrigerant
Propane	C_3H_8	R	–48	42	155	132	T, F	No	Yes	
Freon-22	$CHClF_2$	R	–41	43	175	92	No	(1)	Yes	For low-temperature service
Ammonia	NH_3	R	–28	34	169	555	T, F	No	(2)	High-efficiency refrigerant
Freon-12	CCl_2F_2	R	–22	26	108	67	No	Yes	Yes	Most recommended
Methyl chloride	CH_3Cl	R	–11	21	95	178	(3)	Yes	(4)	Expansion valve may freeze if water is present
Sulphur dioxide	SO_2	R	+14	12	66	166	T, I	No	(4)	Common to these refrigerants:
Freon-21	$CHCl_2F$	RO	+48	5	31	108	No	Yes	Yes	a. Evaporator under vacuum
Ethyl chloride	C_2H_5Cl	RO	+54	5	27	175	F, I	No	(5)	b. Low compressor discharge pressure
Freon-11	CCl_3F	C	+75	3	18	83	No	Yes	Yes	c. High volume-to-mass ratio across compressor
Dichloro methane	CH_2Cl_2	C	+105	1	10	155	No	Yes	Yes	

Notes: (1) Oil floats on it at low temperature; (2) corrosive to copper-bearing alloys; (3) anesthetic; (4) corrosive in the presence of water; (5) attacks rubber compounds.

[a] $°C = \frac{°F - 32}{1.8}$

[b] PSIA = 6.9 kPa

[c] BTU/lbm = 232.6 J/kg

The operating principle of this analyzer makes it ideal for product quality control applications. For example, it can be used in distillation, dryer, evaporator, or similar applications where the product is a binary material and the goal is to continuously check the composition of the product.

In case of distillation column control applications, a reference fluid-filled bulb is connected to one side of a standard d/p transmitter (Figure 8.20d), and the bulb is inserted into the liquid on the control. The other side of the d/p cell is connected to the vapor space above that tray. This way, if the product being made and the reference fluid are the same, their vapor pressures will be identical and the d/p cell will read zero.

This is a very convenient analyzer for product composition control on optimized distillation columns, where the operating pressure is not constant but is "minimized" as a

© 2003 by Béla Lipták

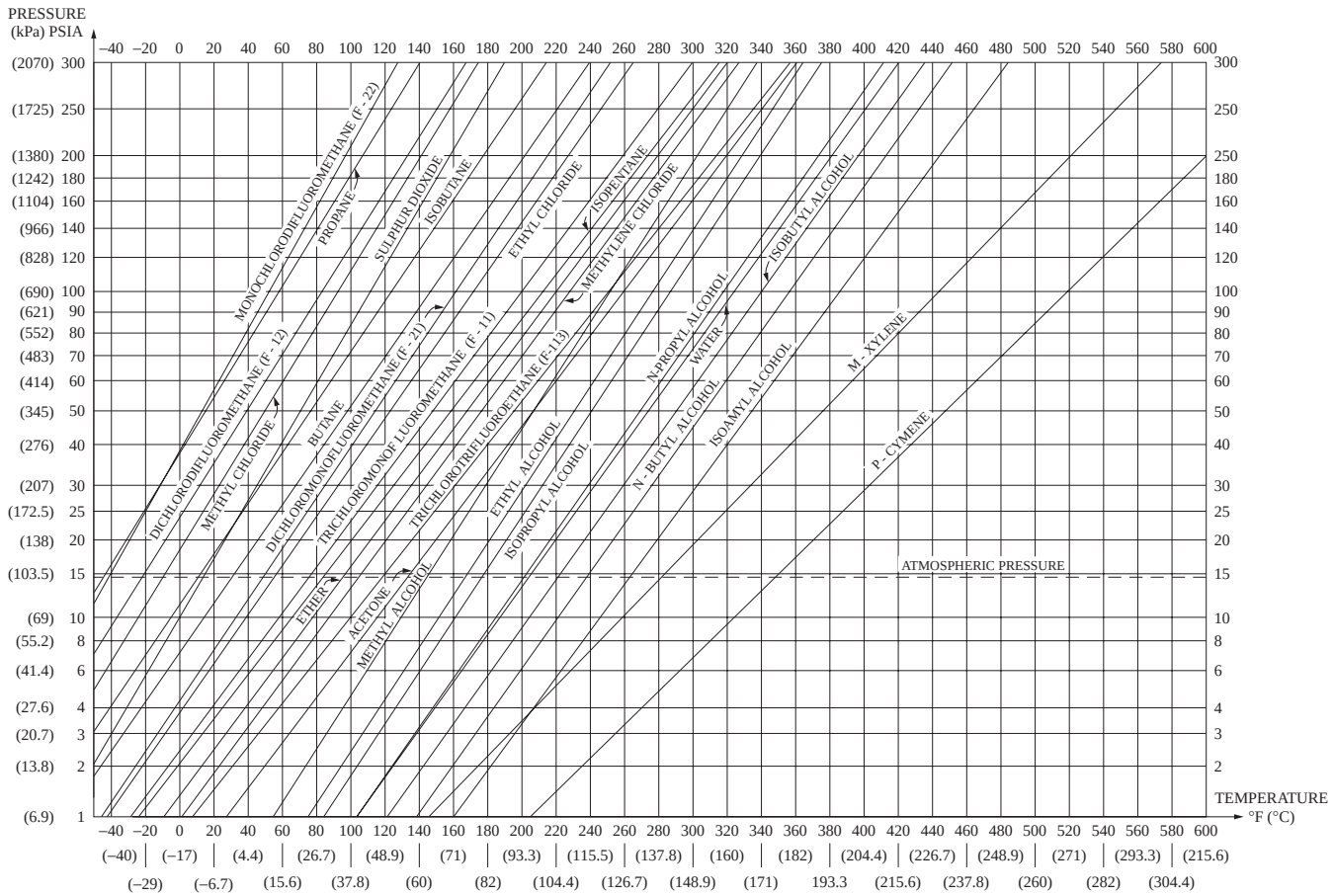

FIG. 8.20b
Relationship between vapor pressure and the temperature of some liquids.

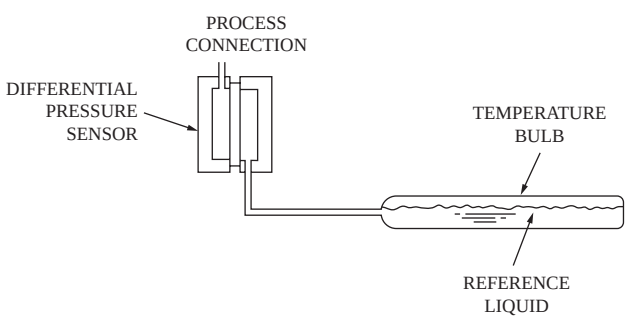

FIG. 8.20c
Differential vapor pressure transmitter.

function of the available cooling tower water temperature. In such applications, a temperature measurement will not accurately reflect composition, because the boiling point varies with pressure.

On the other hand, a differential vapor pressure analyzer will correctly measure the binary composition under variable column pressure conditions, because as the column pressure drops, it also lowers the boiling point on the tray. This in turn will lower the reference bulb temperature and with it the vapor pressure inside the reference bulb. Therefore, as long as the tray composition is constant, the pressure differential will also be constant, even if the column pressure varies.

LIMITATIONS

The limitations of this analyzer include that 1) it correctly reflects the composition of only binary materials; 2) it is essential for a successful installation that the reference fluid be stable; and 3) there can be a transient upset if the column pressure changes faster than the pressure in the reference bulb can follow.

© 2003 by Béla Lipták



FIG. 8.20d
A "smart" force balance d/p transmitter can be fitted with a reference bulb to serve as a differential vapor pressure transmitter. (Foxboro instrumentation courtesy of Invensys plc.)

Reference

1. Foxboro Co., Technical Information Sheet 371-91a and General Specification GS 2B-1d3 B, Foxboro, MA, 2002.

Bibliography

Dyer, S. A., *Wiley Survey of Instrumentation and Measurement,* New York: Wiley, 2001.

Figliola, R. S. and Beasley, D. E., *Theory and Design for Mechanical Measurements,* 3rd ed., New York: Wiley, 2000.

Hughes, T. A., "*Pressure Measurement*," EMC Series, Downloadable PDF, ISA, Research Triangle Park, NC, 2002.

ISA, *Industrial Measurement Series: Pressure* (Video VHS, PAL, and NTSC), 2002.

Johnson, R., "Pressure Sensing: It's Everywhere," *Control Engineering,* 2001.

Marrano, S. J., "*How to Choose and Apply Pressure Transmitters*," *Control,* March 2000.

von Beckerath, A. et al., *WIKA Handbook on Pressure and Temperature Measurement,* Wika Instrument Corp., Lawrenceville, GA, 1998.

© 2003 by Béla Lipták

8.21 Dioxin Analysis

D. H. F. LIU (1995) **B. G. LIPTÁK** (2003)

Type of Sample:	Gas sample containing particulate
Standard Design Pressure:	Generally atmospheric or near atmospheric
Standard Design Temperature:	–25 to 1500°F (–32 to 815°C)
Sample Velocity:	7 to 167 ft/sec (2 to 50 m/sec)
Materials of Construction:	316 or 304 stainless steel for pitot tubes; nickel, nickel-plated stainless, quartz, or borosilicate glass for nozzles
Cost:	$8000 to $16,000 for a complete EPA particulate sampling system (EPA Reference Method 23); $75,000 to $100,000 for laboratory-scale GC-MS unit
Partial List of Suppliers:	Bacharach, Inc. (www.bacharach-inc.com) Cosa Instrument Corp. (www.cosa-instrument.com) MPU Gmb. (www.dioxin.de) Sierra Monitor Corp. (www.sierramonitor.com) Teledyne Analytical Instruments (www.teledyne-ai.com) Xenobiotic Detection Systems (www.dioxin.com)

INTRODUCTION

This section deals with the sampling and analysis of recalcitrant dioxin compounds. These measurements are required in ecological risk assessment and in the determination of the toxicity of various samples. The U.S. Environmental Protection Agency (EPA) regulates emissions from municipal waste combustors (MWCs) and sets emission limits for polychlorinated dibenzo-*p*-dioxines (PCDDs) and polychlorinated dibenzofurans (PCDFs). This section is a summary of the proposed Method 23 for measuring the emissions of PCDDs and PCDFs from MWCs.

PRINCIPLE OF OPERATION

Figure 8.21a is a schematic of the sampling train that is used to measure the emission of PCDDs and PCDFs from MWCs. A sample is withdrawn isokinetically from the stack through a probe, a filter, and a trap packed with Amberlite XAD-2 resin. Figure 8.21b shows the condenser and absorbent trap. The PCDDs and PCDFs are collected in the probe, on the filter, and on the solid adsorbent.

See Section 8.3 for a detailed discussion of the features and operation of stack sampling systems.

Sample Recovery

At the end of the sampling period, the cleanup procedure begins as soon as the probe is removed from the stack. The procedure is as follows. First, any particulate matter and fibers that adhere to the filter holder gasket are carefully transferred to a container (container 1). Next, the absorbent module (XAD-2 sorbent trap in Figure 8.21a) is removed form the train. After that, the material that is deposited in the nozzle, probe transfer lines, and the front half of the filter holder is quantitatively recovered first by brushing, while rinsing each with acetone. Then the probe is rinsed with methylene chloride and all the rinses are collected. The back half of the filter and the condenser are also rinsed with acetone, and the connecting line is soaked with methylene chloride. All the above rinses are collected in container 2. After that, the rinsing is repeated with toluene as the rinse solvent and the rinses are collected in container 3.

© 2003 by Béla Lipták

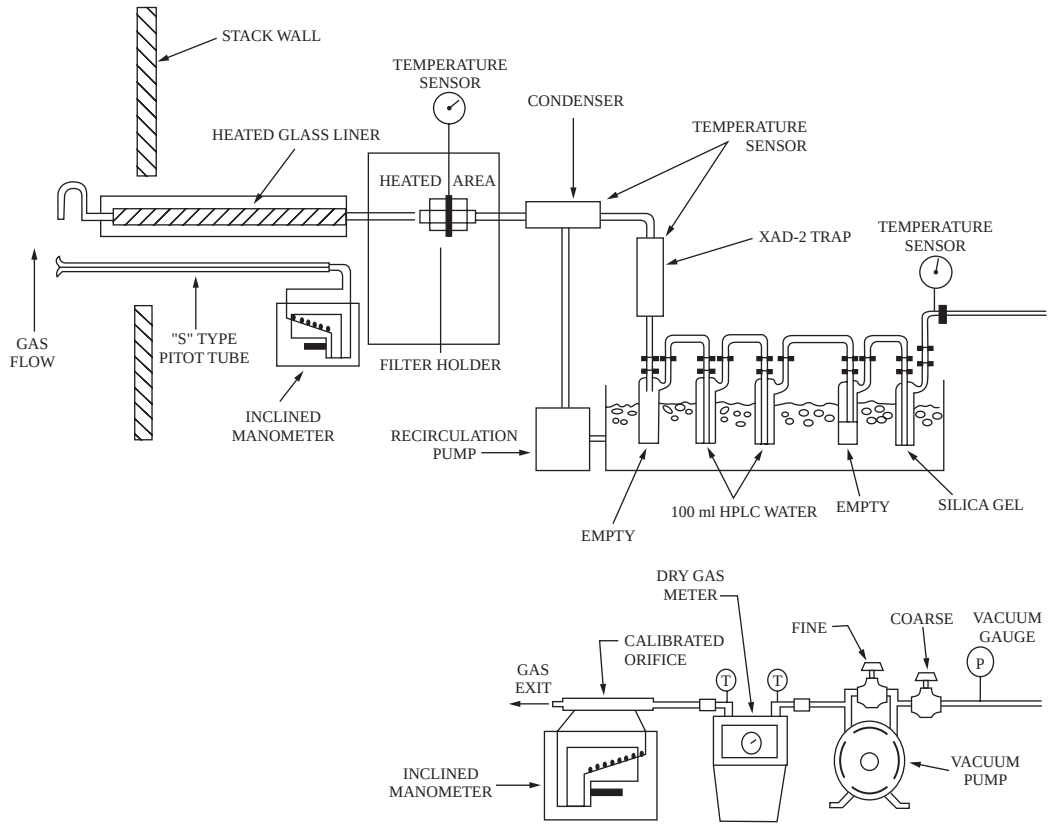

FIG. 8.21a
Sampling train.

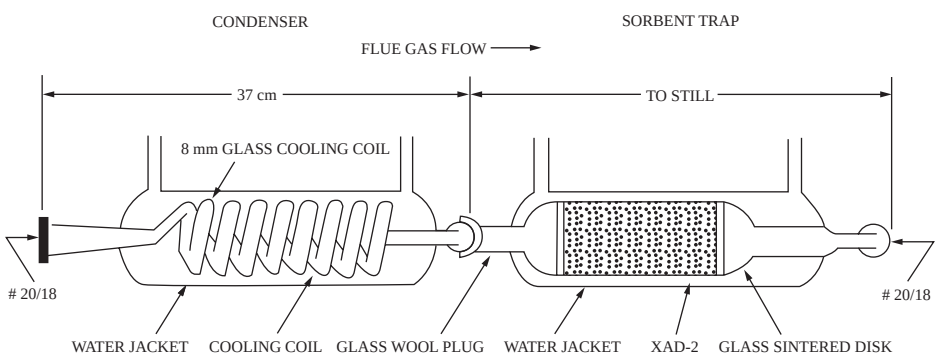

FIG. 8.21b
Condenser and absorbent trap.

Sample Extraction

All the PCDDs and PCDFs are extracted from the particulate matter, the absorbent, and the rinses. The absorbent module (XAD-2) and the particulate cake from the filter are extracted with toluene in the Soxhlet apparatus. The content of container 2 is evaporated at temperatures less that 37°C and is concentrated to dryness. This residue contains the particulate matter removed in the rinse of the train probe and nozzle.

The residue is added to the filter and the XAD-2 resin for extraction in the Soxhlet apparatus. In order to recover all the PCDDs and PCDFs, the material in container 3 goes through a series of multistep treatments.

Analysis

The extracted PCDDs and PCDFs are separated by high-resolution gas chromatography (GC), and each isomer is identified and measured with high-resolution mass spectrometry (MS).

© 2003 by Béla Lipták

The total PCDDs and PCDFs are the sum of the individual isomers.

The gas chromatograph uses an oven that can maintain the separation column at the proper operating temperature and perform programmed increases in temperature at rates of at least 72°F/min (40°C/min). It uses a fused silica column with a length of 183 ft and an inside diameter (ID) of 0.01 in. (60 m × 0.25 mm ID), coated with DB-5, and a fused silica column that is 91 ft × 0.01 in. (30 m × 0.25 mm ID), coated with DB-225.

In operation, the oven temperature starts at 302°F (150°C) and is raised by at least 72°F/min (40°C/min) to 374°F (190°C), and then at 5.4°F/min (3°C/min) up to 572°F (300°C). The mass spectrometer is capable of routine operation at a resolution of 1:10,000 with a stability of ±5 ppm.

CONCLUSIONS

The complexity of this method is such that to obtain reliable results, testers should be trained and experienced with the test procedures. All glass components of the sampling train upstream of and including the absorbing module should be cleaned. The method is described in Section 3A of the "Manual of Analytical Methods for the Analysis of Pesticides in Human and Environmental Samples."

On ground glass connections of used glassware, any residual silicone grease sealant should be removed by soaking the glassware in chromic acid cleaning solution first.

Bibliography

Bretthauer, E. W., *Dioxin Technologies*, Dianen Publishing, 1991.

Enviormental Protection Agency, Method 8290, "The Analysis of Polychlorinated Dibenzo-p-Dioxin and Polychlorinated Dibenzofurans by High Resolution Gas Chromatography/High Resolution Mass Spectrometry in Test Methods for Evaluating Solid Waste," SW-846, EPA, Washington, D.C., 1992.

Enviornmental Protection Agency, "Standard of Performance for New Stationary Source," *Federal Register,* 56(30): 5760–5769, 1991.

Hasselriis, F., "Minimizing Trace Organic Emissions from Combustion of Municipal Solid Waste by the Use of Carbon Monoxide Monitors," National Waste Processing Conference, Denver, 1986 (ASME, 1986).

Kemp, C. C., "Panel Session on Dioxin," National Waste Processing Conference, Denver, 1986 (ASME, 1986).

Konheim, C. S., "Panel Session on Dioxin," National Waste Processing Conference, Denver, 1986 (ASME, 1986).

Niessen, W. R., "The Role and Importance of Polychlorinated Dibenzo-p-Dioxins (CDDs) and Polychlorinated Dibenzo Furans (CDFs) from Resource Recovery Facilities," National Waste Processing Conference, Denver, 1986 (ASME, 1986).

Poillon, F., *Dioxin Perspectives,* New York: Plenum Press, 1992.

Stavropoulos, B. and Harrison, R. O., "Advances in Dioxin Measurement Using High Performance Immunoassay Technology," Leeder Consulting, Fairfield, Vic. Australia, 2002.

Stettler, A., "Results of Investigations of the Five Gases of the Refuse Incineration Installation at Zurich-Josephstrasse Regarding Chlorinated Dioxins and Furans," Proceedings of the 44th Technical Waste Conference, University of Stuttgart, Germany, 1983.

Thompson, J. R., Ed., *Analysis of Pesticide Residues in Human and Environmental Samples,* Research Triangle Park, NC: U.S. Environmental Protection Agency, 1974.

World Health Organization Summary Report, "Working Group on Risks to Public Health of Dioxins from Incineration of Sewage Sludge and Municipal Solid Waste," Naples, FL, March 1986.

© 2003 by Béla Lipták

8.22 Elemental Monitors

D. H. F. LIU (1995) **B. G. LIPTÁK** (2003)

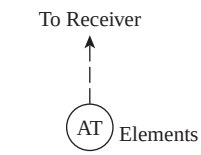

Flow Sheet Symbol

Type of Instrument:	A. ICP (inductively coupled plasma) analytical atomic spectrometer A1. ICP-OES (optical emission spectrometer) A2. ICP-AES (atomic emission spectrometer) A3. ICP-MS (mass spectrometer) B. XRF (x-ray fluorescence) spectrometer
Element Range:	A. Virtually all elements B. A1 to U
Cost:	A1. $50,000 to $200,000 A3. $140,000 to $350,000 B. $200,000 to $300,000 (on-line); $10,000 to $30,000 (portable)
Partial List of Suppliers:	Agilent Technologies (A) (www.agilent.com) Finnigan MAT GmbH (www.thermoquest.com) Intax GmbH (B) (www.intax-berlin.de) Jobin Yvon, Horiba (B) (www.jyinc.com) Jordan Valley (B) (www.forevision.com) Kontron GmbH (A) (www.kontron.com) Leeman Labs Inc. (A) (www.leemanlabs.com) Oxford Instruments (B) (www.dxcicdd.com) PerkinElmer Instruments (A) (www.instruments.perkinelmer.com) Phototronics Products (A) (www.phototronics.com) Shimadzu Sci. Instruments (A) (www.shimadzu.com) Spectro Analytical Instruments (B) (www.spectro-ai.com) Thermo ARL (B) (www.thermo.com) Thermo Elemental (B) (www.thermoelemental.com) Varian Inc. (A) (www.varianinc.com)

INTRODUCTION

Since its appearance in the 1960s, atomic absorption (AA) has become a widely used analytical tool. It is a popular analysis technique for elemental analysis in solids, liquids, and loose powders of either organic or inorganic materials. Typical applications include the detection of sulfur (S) and lead (Pb) in refineries; the measurement of oxides in such raw materials as limestone, sand, bauxite, ceramics, slags, and sinters; and the sensing of major and minor elements (Cu, Fe, Ni, etc.) in food and chemical products. Compared to earlier techniques, AA is faster, more sensitive, and free from interference.

The inductively coupled plasma (ICP) atomic emission technique first appeared in the late 1970s and has been recognized as a technique with remarkable selectivity and sensitivity. It has simultaneous or rapid sequential multielement determination capability at the major, minor, trace, and ultratrace concentration levels without change of operating conditions.

X-ray fluorescence (XRF) is an analytical technique that is well suited to on-line applications. It has been used to measure the elemental composition of solids, liquids, and slurries. Solids analyzed have been in such diverse forms as powders, granules, sheets, or discrete parts. XRF is fast, reliable, and nondestructive (Figure 8.22a). It is also less expensive than other techniques, such as neutron activation, and introduces few health or safety hazards.

ATOMIC ABSORPTION SPECTROMETER

Figure 8.22b illustrates the basic operating principles of flame and furnace AA spectrometers. In flame AA, the sample is aspirated, nebulized, and passed into a flame that is burning

© 2003 by Béla Lipták

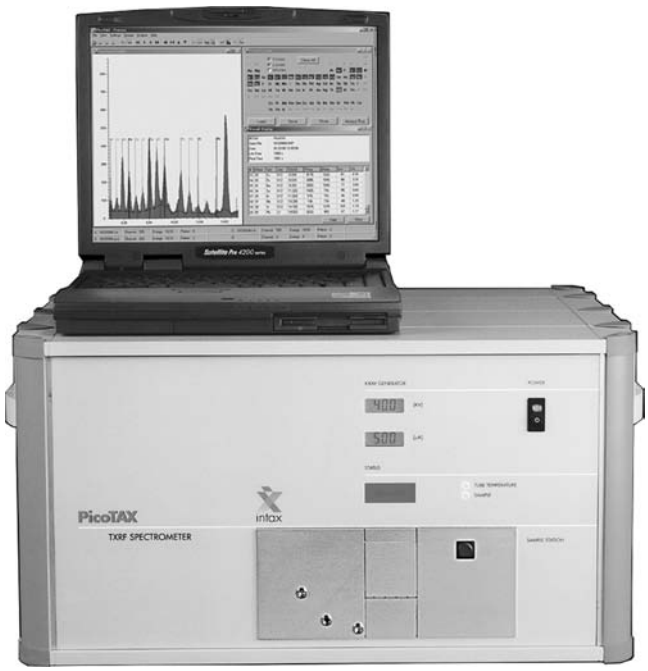

FIG. 8.22a
X-ray fluorescence spectrometer. (Courtesy of Roentec GmbH, Berlin, Germany.)

at about 3000°K. The flame causes the sample compounds to dissociate. The sample atoms then can absorb radiation at wavelengths, called resonance lines, that are specific for the elements.

The radiation source is a hollow cathode lamp in which the cathode contains the element being determined, and the monochromator is tuned to the appropriate resonance wavelength. Most commercial AA instruments can determine only one element at a time.

In furnace AA, a hollow graphite cylinder replaces the flame. The cylinder is heated electrically to a temperature high enough to atomize the sample. This unit is called a furnace atomizer, graphite furnace, or carbon rod. The device improves detection limits by 100- to 1000-fold, as compared to flame AA, but the furnace exhibits poorer precision and slower analysis speed, experiences more interference, and costs more.

INDUCTIVELY COUPLED PLASMA DETECTOR

Figure 8.22c shows a schematic of an ICP type detector. A stream of argon passes through a radio-frequency (RF) induction coil, producing considerable heat. When "seed electrons" are introduced, an argon plasma is formed in the fireball region of the plasma from 8000° to 10,000°K.

Argon is used to sustain the plasma because it requires less RF power than other gases. The outer flow supplies the plasma gas and cools the quartz torch. The inner flow carries the sample aerosol into the plasma. An optional middle flow helps to position the plasma and prevents carbon buildup on the tip of the central tube.

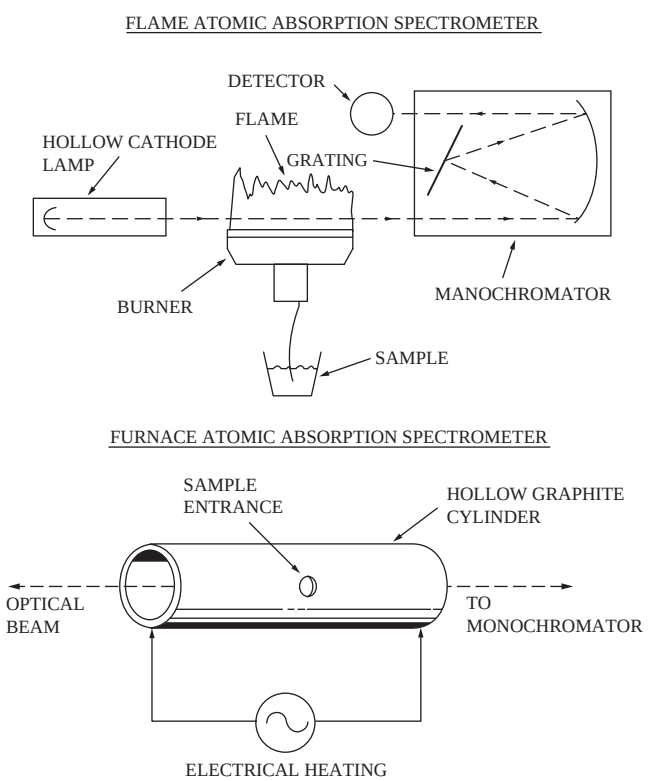

FIG. 8.22b
Atomic absorption spectrometers.

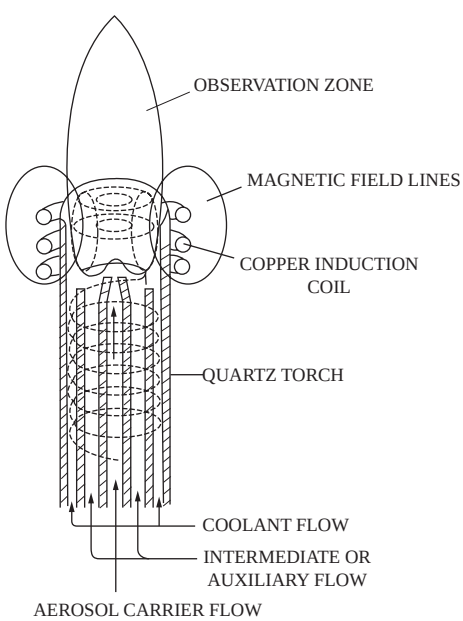

FIG. 8.22c
Inductively coupled plasma.

© 2003 by Béla Lipták

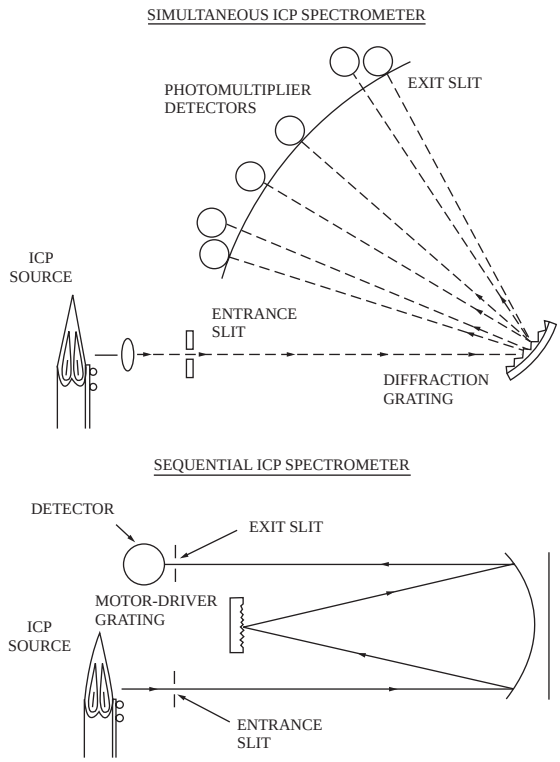

FIG. 8.22d
Inductively coupled plasma spectrometers.

Operating Principle

Figure 8.22d illustrates the basic operating principles of both the simultaneous ICP spectrometer and the sequential ICP spectrometer. In either system, the sample is nebulized and introduced into the center of the plasma. The temperature causes the molecules to dissociate. At the same time, the atoms are excited and the excited atoms emit radiation. Every element emits radiation at its own characteristic wavelength.

In simultaneous ICP, the light passes through the entrance slit of a polychromator and is then diffracted by a grating. Exit slits and photomultiplier (PM) detectors are placed to capture the radiation of the wavelengths from the elements of interest. The electrical current produced by the PM detector is proportional to the concentration of the element emitting that light.

In sequential ICP, the light output from a plasma torch passes through the entrance slit of a monochromator. The grating angle (and hence the output wavelength) is varied by a stepping motor under computer control. The grating stays at each wavelength long enough to make the measurement. It then is driven rapidly to the next desired wavelength.

SELECTING AMONG AA AND ICP

When deciding whether an AA instrument or an ICP instrument is the best option, the following should be considered:

1. Speed of analysis: The higher speed of ICP analysis stems from its capability to analyze several elements in a given sample. This produces a significant advantage in a sequential instrument, and an even greater advantage in a simultaneous instrument. In either case, speed in the two techniques differs by an order of magnitude.
2. Flexibility: The ICP technique gives a highly linear response, which enables simultaneous analysis of elements over a broad range of concentrations. This simplifies sample preparation and calibration. ICP requires no special cathode lamps for specific elements, so the sequential instruments become permanently available for analyzing any element. Also, the ICP technique enables the analysis of elements such as S and P that cannot be handled using the flame AA technique. It also provides increased capability for analyzing large series of elements such as B, W, lanthanides, and refractory in general.
3. Matrix interference: ICP spectroscopy is much more free from chemical and physical interference. An uncommonly high plasma temperature in an inert environment (Ar gas) reduces the problem of matrix interference.
4. Detection limits: The great sensitivity inherent in the technique and its improved signal-to-noise capacity give ICP better detection limits than those available with traditional flame AA. But the detection limits of furnace AA are better than those of a plasma for most elements. The exceptions are rare earth elements (B, U, Zr, etc.) plus nonmetals (S, Cl, I), which the AA furnace cannot measure.
5. Precision: Both systems use a pneumatic transfer system for samples and are very similar with respect to the degree of precision (i.e., repeatability) that can be obtained. There are no limitations to the use of ICP, as it can be used on gases, liquids, and solids (if spark ablation, laser ablation, or slurry introduction accessories are provided), so that vapors can be introduced into the plasma.

In spite of its advantages, the use of ICP has been limited by its relatively high cost, which can be justified only for large-scale analysis tasks or for solving problems that cannot be solved with flame AA. Because of increased productivity and lower prices, many laboratories have replaced AA spectrophotomers with ICP systems and left only the simpler tasks to be performed by flame AA spectrophotomers.

X-RAY FLUORESCENCE SPECTROMETER

XRF spectrometers irradiate the sample with a beam of high-energy x-rays that excite the elements present in the sample, so that they produce characteristic x-rays. This phenomenon is called x-ray fluorescence. XFR provides specific analyses of total elemental concentrations, without regard to chemical combinations.

© 2003 by Béla Lipták

The sample is excited by a source of electromagnetic radiation. This radiation excites the elements in the sample, causing them to fluoresce (i.e., give off their characteristic x-rays). The energy of these characteristic x-rays identifies the element, and the intensity is a measure of the element's concentration in the sample. The resulting signal is integrated over a period to give an average measure of concentration during this time.

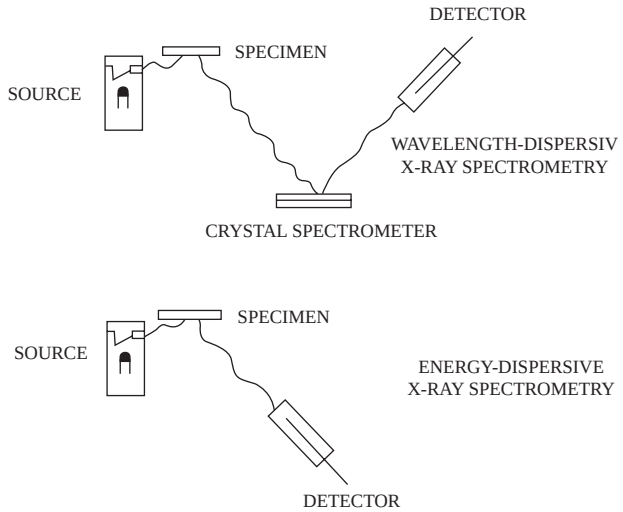

FIG. 8.22e
X-ray fluorescence spectrometers.

Instrumentation

On-line XRF analyzers can be configured in different ways to excite the process sample or to detect the characteristic fluorescence. The right combination of excitation and detection methods depends on the specific application. The x-ray source may be an x-ray tube or radioactive isotope (iron-55, curium-244, cadmium-109, or americium-241). The detection method may be either wavelength-dispersive (WDXRF) or energy-dispersive (EDXRF) XRF. When choosing either the anode used for the x-ray or a specific radioactive isotope, proper consideration should be given to the range of elements to be measured and the corresponding concentrations.

Figure 8.22e illustrates the principles of WDXRF and EDXRF instruments. With WDXRF, the x-ray energies are separated according to specific wavelengths by diffracting crystals. The respective intensities are then measured by individual proportional counters. Sample excitation is by x-ray tube. With EDXRF, characteristic fluorescence is detected by a low-temperature, solid-state detector or a gas-filled proportional counter and sorted electronically to produce an XRF spectrum of x-ray-intensity energy. In EDXRF, sample excitation is by a low-level radioisotope source.

The WDXRF technique offers the best resolution, shortest analysis time, and highest sensitivity. It is well suited for the most demanding tasks, such as analyzing neighboring elements with large differences in concentrations. An EDXRF can be very compact and economical. It gives excellent sensitivity with good resolution, especially for light element analysis. The EDXRF systems are very useful in quality control, troubleshooting problems, etc.

Table 8.22f gives a partial list of proven and potential on-line XFR applications. A wide choice of sampling systems is now available for continuous monitoring of liquids in pipelines or tanks, granular solids in chutes, parts on conveyors, coatings on moving sheets of metals, or pigments in moving plastics or paper sheets. As on-line XRF technology advances, continued growth in the number of applications and installations can be expected.

TABLE 8.22f
List of Proven and Potential On-Line XRF Applications

Petroleum Refining

- S in crude, refinery streams, gasoline, fuel oil, diesel, and MEA, DEA, and TEA stripper bottoms
- V, Ni, and Fe in crude residues, cracking catalysts, coke, and bunker fuels
- Ca, Zn, Cu, S, Cl, and Ba in lube-blending operations
- S in sour water

Chemical and Petrochemical

- Ti, Zn, Ca, and other fillers in polyolefins and other polymers
- Sn, Br, Sb, P, Cl, or other fire retardants in fiber (nylon, orlon, etc.) manufacture
- S, Cl, and Br in elastomers
- P in detergents
- Monitoring catalysts—typically Co, Mo, Ni, Mn, Br, Ti, Pt, and Rh in processing
- Blending additives manufacture (Ca, Zn, and Ba)

Inorganic Chemical Processing

© 2003 by Béla Lipták

TABLE 8.22f Continued
List of Proven and Potential On-Line XRF Applications

- Phosphoric acid manufacture
- Metal treatment (plating) chemical manufacturing
- Inks and paints (Ti, Zn, Pb, etc.); TiO_2 manufacture
- China and other types of clay purification (Ti and Fe)
- Photographic chemicals (As and Br)
- Rare earths and rare earth chemical manufacture
- Extractive hydrometallurgy (Cu, Zn, U, Hf, and Zr)
- Glass manufacture—monitor Si, Fe, Ti, Ca, and K
- Cement industry—monitor Fe, Ca, and Si

Pulp, Paper, and Rayon

- Ca and Ti additives in pulp
- Lignosulfates (S)
- Wood preservatives (As, Cu, and Cr)
- Viscose manufacture (Zn and S)

Catalyst Industry

- Precious metal catalysts (Pt, Pd, and Rh)
- Auto emission, reforming catalysts
- Manufacture of Mo, Co, Ni, and Zn-based catalysts
- Catalyst recovery operations

Plating and Electroplating

- Zn—Ni and Zn—Fe alloy coating of steel
- Metals in pickling baths
- Zn phosphating bath
- Zn—Pb, Au—Ni—K, and Ni—Br in plating baths for PC boards and electronic components

Metal Refining and Hydrometallurgical Operations

- All base metals (Zn, Cu, Pb, Mo, Co, Ni, etc.)

Bibliography

Clevett, K. J., *Process Analyzer Technology,* New York: John Wiley & Sons, 1986, pp. 383–388.

Fiorini, C. and Longoni, A., *IEEE Transactions Nuclear Science*, 46, N6, p. 2011, 1999.

Fitzgibbon, P., "X-Ray Fluorescence for On-Line Elemental Analysis," *Control,* March 1992.

Gatti, F. and Rehak, R., *Nuclear Instrumental Methods*, A225, p. 608, 1984.

Jobin, Y., Division of Instrument S.A., *ICP Technique as a Replacement for Automatic Absorption Coupled Plasma (ICP),* Edison, NJ: Jobin Yvon, 1989, pp. 1–22.

Kahn, H. L., "AA or ICP? Each Technique Has Its Own Advantages," *Ind. Res. & Dev.,* February 1982, pp. 156–160.

Lechner, P. et al., *Nuclear Instrumental Methods,* A377, p. 346, 1996.

Ramanujam, R. S. and Fitzgibbon, P., "X-Ray Fluorescence for On-Line Elemental Analysis," *Control,* March 1990.

X-Ray Fluorescence, US EPA, Washington, D.C., 2001.

X-Ray Fluorescence, Amptek Inc., Bedford, MA, 2002.

© 2003 by Béla Lipták

8.23 Fiber-Optic Probes

D. H. F. LIU (1995) **M. W. REED** (2003)

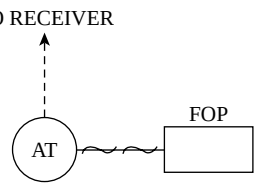

Flow Sheet Symbol

Type of Process Fluid:	Liquids, solids, gases
Standard Design Pressure:	Up to 1000 PSIG (70 bar)
Standard Design Temperature:	Up to 900°F (480°C)
Materials of Construction:	Stainless steel (others are available), sapphire, sealing materials
Costs:	From $1000 for wand probe with tip to $2500 for spectra-caliper probe; fiber-optic spectrophotometer systems range from $2000 to $20,000
Partial List of Suppliers:	ABB-Bomem Inc. (www.bomem.com) Banner Engineering Inc. (www.bannerengineering.com) Bran & Luebbe (www.branluebbe.com) Brinkmann Instruments (www.eppendorfsi.com/search.asp) Dolan-Jenner Industries (www.dolan-jenner.com) Edmund Scientific (www.edsci.com) Guided-Wave (www.guided-wave.com) L.T. Industries, Inc. (www.LTIndustries.com) Ocean Optics Inc. (www.oceanoptics.com) Perstorp Group (www.perstorp.se) Thermo Electron Corp. (www.thermo.com)

INTRODUCTION

Fiber-optic techniques offer several advantages for chemical and optical analysis, because the probes can be installed *in situ* to monitor the composition of chemical process streams in real time. This method of analysis does not disturb the process, and if the composition can be determined spectrophotometrically, the readout instruments can be several hundred meters from the probe.

The probe can be located in toxic, corrosive, radioactive, explosive, high- or low-temperature or -pressure, and noisy environments. Because the measurement signal is optical, the cables are immune to microwave or electromagnetic interference.

The term *fiber optic* is a misnomer because there are no fibers in the bundle, but rather thousands of glass filaments. Excessive bending of these filaments will cause them to break, which will reduce the light capacity.

PRINCIPLE OF MEASUREMENT

Most present-day fiber-optic sensors use linear diode arrays combined with optical gratings, as shown in Figure 8.23a. Depending on the grating and diode array, spectral data are obtained for remote measurement of absorption, transmission, fluorescence, and reflection in the ultraviolet (UV), visible (VIS), and near-infrared (NIR) regions. An electrically stabilized light source supplies the polychromatic light. Light travels to the sampling probe via one fiber-optic cable and returns to the instrument via a second. This is referred to as a bifurcated fiber-optic cable.

The sample interacts with and transmits or reflects light to the input optics. External lighting may be substituted, and in that case, only a single fiber-optic input cable is needed. Because of the lower cost of today's diode array spectrophotometers using fiber optics and serial bus communications, it is more economical to use multiple spectrophotometers rather than multiplex fiber-optic inputs to just one spectrophotometer. Current instruments can scan at rates exceeding 10 scans per second without diminishing accuracy.

INSTRUMENTATION

Laser excitation permits long-distance transmission of excitation radiation to get a useful signal from the sample. Deuterium-arc and tungsten-halogen lamps provide UV or NIR radiation. See Section 8.61 for other energy sources for UV.

© 2003 by Béla Lipták

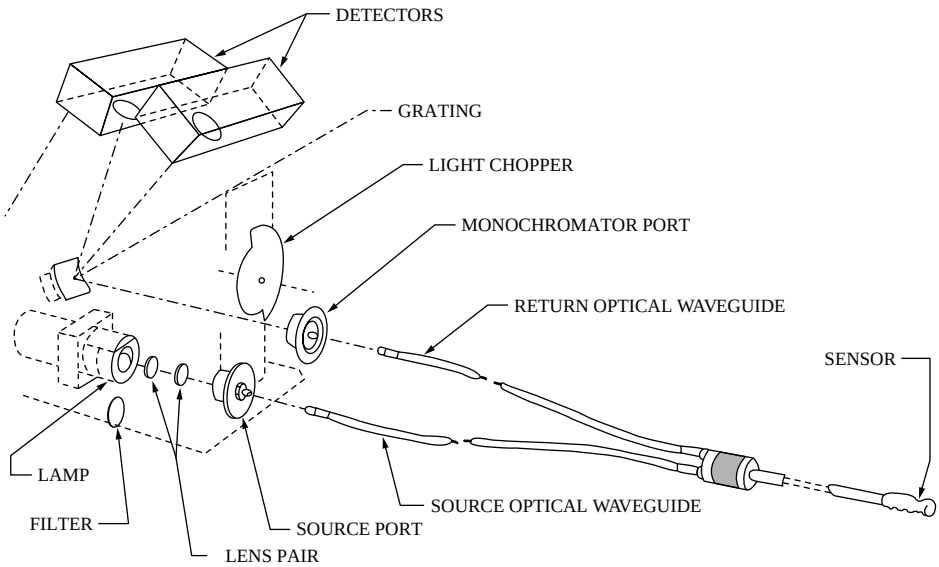

FIG. 8.23a
Modular optical train.

Glass Optical Fiber

The absorption characteristics of silica glass limit it to a spectral range of about 200 to 2200 nm and, therefore, optical quartz fiber optics are preferred. Fluoride glass is used for infrared up to 3200 nm. Two types of silica filaments are available. Certain hydroxyl (—OH) concentrations are needed to pass light in the UV spectrum. High OH filament is needed for the 250- to 800-nm range. Low OH filaments are used for the 400- to 2100-nm range.

As the length of the fiber-optic cable increases, the signal is attenuated. To avoid this problem and the cost of ultra-high-purity glass, it is often now possible to place the spectrophotometers close to the process. This also reduces the effect of cable movement. Long cables allow bundles to shift and bend, which introduces noise. Stainless steel sheathing is normally used. Several thousand filaments can be arranged in random or grouped into different arrangements such as bifurcation. Operating temperatures can range from –140°C to 480°C.

Plastic Optical Fiber

Acrylic monofilaments of different diameters can be enclosed in polyvinyl chloride (PVC) or stainless steel sheaths and used in temperature ranges from –30°C to 70°C. Most glass fiber-optic cables will have a polished epoxy seal at the ends of the bundles to provide a liquid and airtight seal. Thus, the ends of glass, as well as plastic fiber optics, can be destroyed by acidic and caustic environments. To deal with this, cells are made to accommodate the light path and the sample stream. Banner Engineering Inc. offers a wide selection of glass and plastic fiber-optic cables, accessories, and evaluation samples.

Probes

Figure 8.23b shows a variety of probes for UV-VIS-NIR measurements.

Wand Probe Wand or dip-type probes are single-sided probes for optical transmission, absorbance, reflectance, and fluorescence measurements. They can be used in laboratory reactors, process lines, or laboratory bench settings. Designed in single-strand and fiber bundle configurations, the wand probe employs a mirrored tip to reflect from the sending fibers to the receiving fibers.

The absorbance tips are available in a variety of materials and path lengths (i.e., 1 mm to 4 cm). Without the tips, the fiber bundle probes can be used for reflectance and fluorescence measurements. The mirror tip is made of gold, rhodium on brass, or rhodium on gold, and the body is made of 316 stainless steel (others are available, e.g., Hastelloy and Monel). This probe style can be adapted to laboratory robotics systems for automated processing of a high volume of samples.

Spectra-Caliper Probe Spectra-caliper probes are used for transmission measurements through solid samples such as plastic films, fibers, biological tissues, and intact plant leaves. This device provides a precise, variable path length from 0.1 to 5 mm and is also useful for measurement of light-absorbing liquids.

Transmission Probe Transmission probes are always used in pairs for optical transmission and absorption measurements. They are typically installed in a flow cell for liquid analysis, or directly in a sample or process line. The two probes are arranged in 180° geometry to pass light straight

© 2003 by Béla Lipták

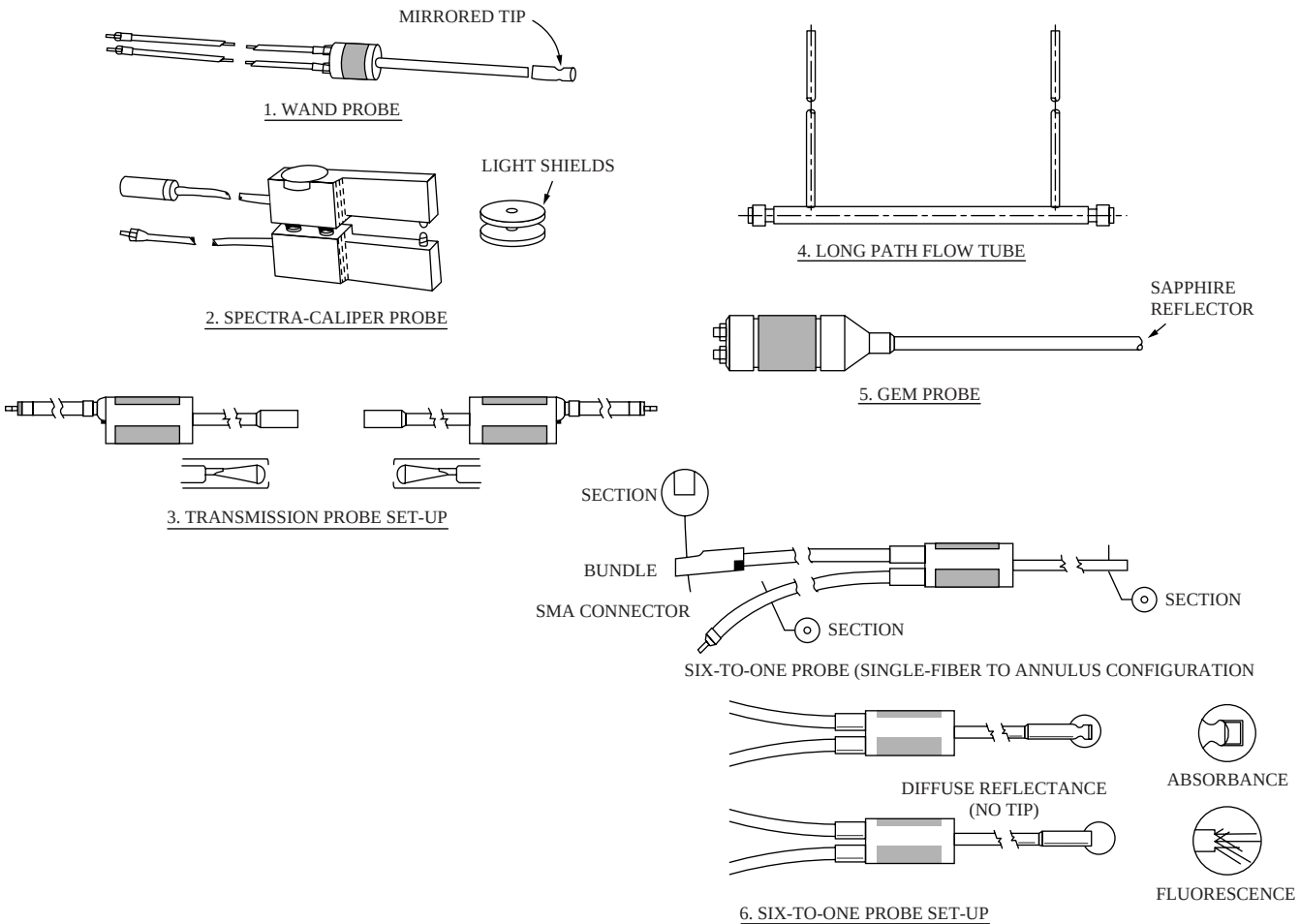

FIG. 8.23b

Sensor probe assemblies for both general and special applications. (Courtesy of Guided Wave Inc.)

through the sample. The probes are constructed of 316 stainless steel (other materials are available, e.g., Hastelloy and Monel). A sapphire window is sealed into the body with a glass frit. The sapphire window is also a lens that collimates light in transmission and refocuses light on receiving.

The path length through the sample may be from 0.5 mm to 10 cm or more. The upper temperature limit for the probe is more than 300°C, and the lower limit is less than 15°K. The probes can operate in high vacuum or at pressures up to 5000 PSIG (352 bars).

Long-Path-Flow Tube The long-path-length gas probe is used for the measurement of gases or vapors in stacks, in process pipes, or through the atmosphere. A pair of probes is required for transmission-type measurements. One probe sends a highly collimated light across the sample, and the second collects the light and focuses it back onto a single fiber. The optics can be purged with inert gas, and the window can be continuously cleaned by an air wipe.

GEM Probe GEM probes use gemstonetips such as saphire. The GEM probe is based on attenuated total reflectance (ATR) concepts and single-strand fibers. In the probe, light is transmitted by a single-strand fiber to the sapphire crystal. The light is internally reflected in the sapphire to a receiving single-strand fiber cable. The spectrum of any strongly absorbing, lower-refractive-index material in contact with the sapphire can be measured. The probe serves as a short-path-length measuring tool. The GEM probe can be used in water and in all common organic solvents.

The remote surface reflectance probe is constructed with a sapphire or quartz window to pass light toward the sample surfaces at an incident angle of 0°. Reflected energy is collected at a 45° angle. Both a liquid cooling loop and a nitrogen purge are included in the probe for heat dissipation. This probe is useful for solid and powder materials.

Six-to-One Probe The six-to-one probe has been developed for fluorescence, reflectance, and Raman. With this probe, it is possible to illuminate the sample with light from an appropriate source (xenon arc, laser, etc.) and then measure the reflected, scattered, or emitted light using six fibers mounted around the light-conducting central fiber.

© 2003 by Béla Lipták

There are assemblies for use in constructing probes for measuring transmittance through or reflectance from sheets or other flat surfaces, and for working with cuvettes.

Sample Interfaces

In batch or nonpressurized processes that are accessible, fiber optics in dip probes can be used. On continuous processes that are hot or under pressure, the probes must be mounted in a sample stream. Sometimes the sample stream is sent to a heat exchanger for precooling. After the analysis is made, the sample stream may be returned to the process. In order to be able to isolate the probe for replacement and cleaning, block valves should also be installed. Some of the installation options are illustrated in Figure 8.23c.

Detectors

Photomultipliers are commonly used for the UV detectors; silicon photodiodes are used for visible detectors; and germanium photodiodes and photoconductive lead sulfide detectors (both with thermoelectric cooling) are used for NIR detectors. Indium–gallium–arsenide is another material commonly used for NIR detectors. A 512-element silicon diode array with a fixed grating is available for the NIR region (700 to 1100 nm). See Section 8.61 for other types of detectors used in UV analyzers.

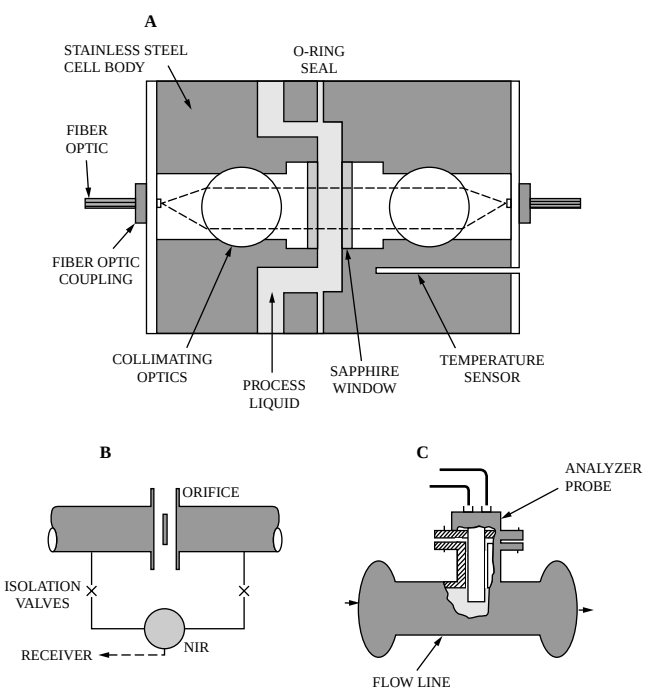

FIG. 8.23c
Alternative methods of on-line installation of NIR analyzers: (A) measurement of the complete process stream, (B) bypass configuration, (C) probe-type design.

Interchangeable dual-detector modules (Figure 8.23a) give high performance over a wide range. A grating positioning system allows rapid scanning at one detector's assigned spectral range and then switches to the second detector to complete the scan.

Successful on-line instrumentation requires a stable measurement system. This means synchronous detection where the instrument senses and compensates for drift in every cycle.

Software

Most fiber-optic spectrophotometers are supplied with spectral data analysis software for windowing desired wavelength ranges. Ocean Optics Inc. provides its SpectraScope™ operating software with features such as automatic calibration, external signaling, and real-time color measurements.

APPLICATIONS

Four approaches can be used for qualitative and quantitative chemical analysis. These techniques include absorption, fluorescence, scattering, and refractive index change.

Absorption

In the UV region, low concentrations of many unsaturated organic compounds can be measured. Some inorganic compounds such as residual chlorine in chlorinated solvents have been measured at 360 nm, and chlorine dioxide at 350 nm. See Section 8.61 for additional examples.

In the visible region, colorimetry of dyes and pigments and metal analysis can be carried out as described in Section 8.15. In the NIR region, concentrations of water and organic compounds with bonds such as CH, OH, NH, and unsaturated bonds can be monitored. The absorbance spectrum can be analyzed for octane numbers of gasolines, polymer properties and cure rates, water in solvents and resins, and food analysis for fat, protein, and sugar.

Fluorescence

Figure 8.23d illustrates the use of remote fiber fluorescence (RFF) for chemical analysis. An RFF system couples a high-intensity light into a single, large-core quartz fiber. Upon exiting the fiber, the rays of light impinge upon the sample, which gives off a characteristic fluorescent emission. The emission travels back to a photodetector, which, with the aid of a computer, can provide both qualitative and quantitative information. The fiber in the sample is called an optrode.

Using the RFF technique, measurements have been demonstrated with uranyl, chloride, iodide, iron, plutonium, and sulfate ions. RFF techniques can be used for monitoring groundwater near hazardous waste dumps. Groundwater does not normally fluoresce, but contaminated water typically does.

© 2003 by Béla Lipták

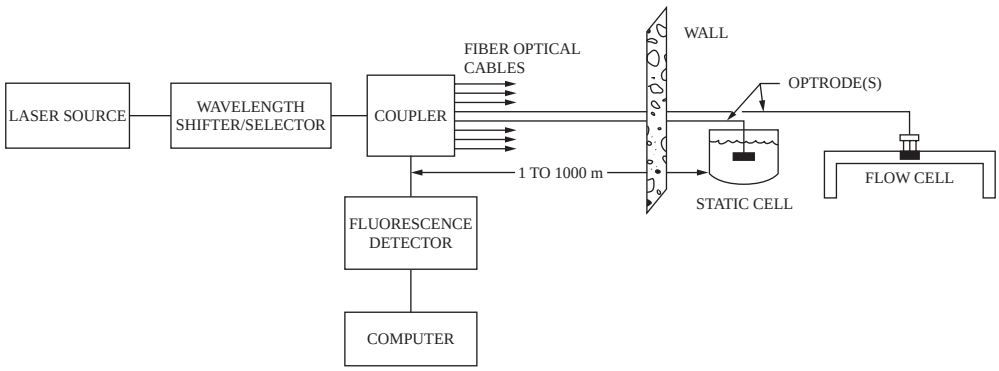

FIG. 8.23d
In RFF, the optical fibers relay the fluorescence signals from a variety of remote sampling sites.

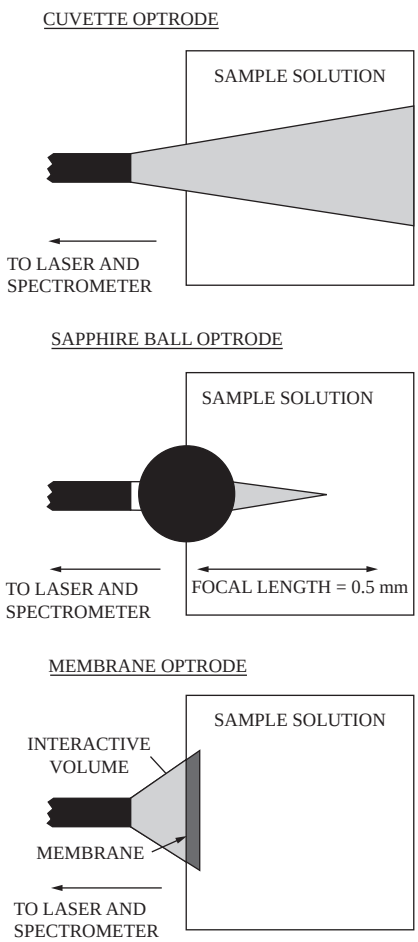

FIG. 8.23e
Optrodes are used in RFF to couple the fibers to samples.

Optrodes Figure 8.23e shows the optrodes used in the RFF. The simplest optrode is just the bare end of the optical fiber inserted into the sample or a fluorescence cuvette. If greater sensitivity is required, a small sapphire ball is used to focus laser light at a point about 0.5 mm into the sample. This ensures that weak fluorescence is concentrated near the fiber.

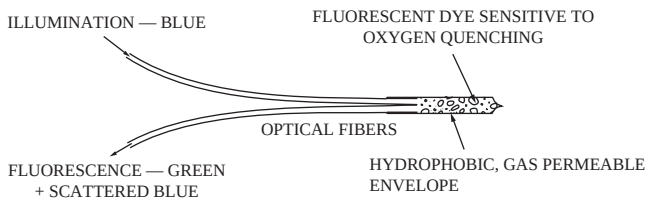

FIG. 8.23f
The construction of a fiber-optic fluorescent probe.

Another option is the membrane optrode, in which the sample flows into a small chamber, where it is interrogated by the laser light. This allows a closer control of the sample environment because fluorescence can be environmentally sensitive.

A material does not have to be fluorescent to work with the technique. A target of known fluorescence can be used. The sample can react with the target and enhance or diminish its fluorescence. Aluminum and other metals have been analyzed by using a reagent immobilized in the form of a powder and attached to a bifurcated fiber-optic cable. The metal reacts with the reagent, giving a fluorescent signal. The response time was 1 to 2 min with a detection limit of 0.027 ppm.

Oxygen Probe Figure 8.23f shows an oxygen probe, based on fluorescence quenching. In this probe, a high-intensity blue light is transmitted to the dye through one leg of a bifurcated fiber-optic probe. The blue light, upon impinging the dye, gives off a characteristic green fluorescence. The level of fluorescence diminishes with the increasing levels of oxygen that pass through the hydrophobic, gas-permeable polypropylene membrane. Oxygen reacts with the dye perylene diburyrate. The partial pressure of oxygen is a function of the ratio of blue light intensity to green light intensity.

Scattering

The scattering concept has been used to determine the volume fraction of one immiscible liquid in another (see Section 8.39) and to characterize smoke in a stack (see Section 8.46).

© 2003 by Béla Lipták

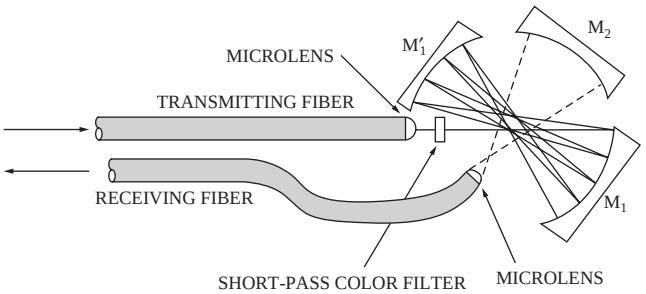

FIG. 8.23g
Multipass reflection sensor used for Raman scattering.

Raman laser scattering has been used to detect low concentrations of various gases. Figure 8.23g shows a multipass sampling probe designed to enhance the system sensitivity. The spherical mirrors labeled M_1 and M_1' provide for multiple passes of the light beam. A portion of the scattered light is injected directly into the receiving fiber, while additional scattered light reflects from M_2 into the receiving fiber.

Refractive Index

Figure 8.23h shows a reflective fiber-optic probe for sensing refractive index change. The index of the prism is sufficiently higher than that of air, so that a condition of total internal reflection will exist within the prism. Light transmitted to the prism is reflected into the fiber-optic probe. If the prism is immersed in a liquid with a refractive index higher than that of the prism, the reflected light will decrease significantly. Such a device can provide a measure of concentration, because many components of a solution alter the refractive index of the liquid, as a function of concentration. For example, sulfuric acid has a refractive index of 1.33 in low concentrations and 1.46 in concentrations over 90% by weight.

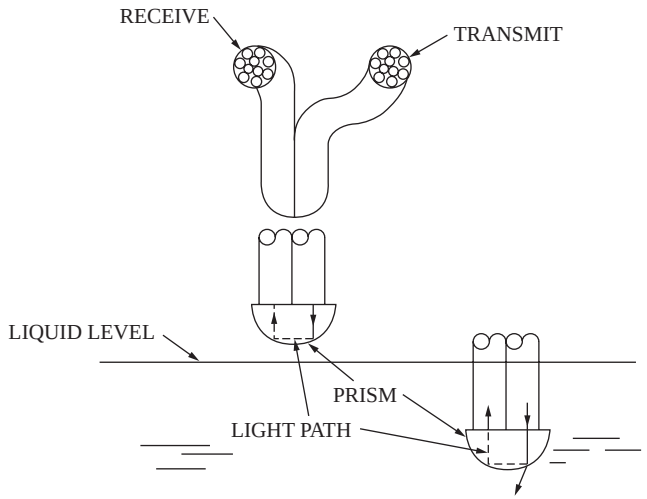

FIG. 8.23h
Reflective fiber-optic probe installed to detect changes in refractive index.

Bibliography

1998 Global Photonics Technology Forecast, *Photonic*s Spectra, January 1998.

Control Staff, "Fiber Optics, Spectroscopy Team for Chemical Identification," *Control*, February 1993.

"Fiber Optics Simplify Remote Analysis," *C&EN*, September 27, 1982, pp. 28–30.

Fitch, P. and Gargus, A. G., "Remote UV-VIS-NIR Spectroscopy Using Fiber Optic Chemical Sensing," *American Laboratory*, 17(12), 1985, 54–71.

Krohn, D. A., "Chemical Analysis with Fiber Optics," *Analysis Instrumentation*, Vol. 22, 1984, 43–50.

Landa, I., "Visible (VIS), Near Infrared (NIR) Rapid Spectrometer for Laboratory and On-Line Analysis of Chemical and Physical Properties," *SPIE*, Vol. 665, 1986, pp. 286–289.

Maugh, T. H., "Remote Spectrometry with Fiber Optics," *Science*, November 26, 218, 1982, pp. 875–876.

Munsinger, R. A., "Fiber Optic Colorimetry," *Electro-Optical Systems Design*, February 1981, pp. 43–47.

Schirmer, R. E., "On-Line Fiber-Optic Based Near Infrared Absorption Spectrophotometry for Process Control," Proceedings of the Instrument Society of America, Ann Arbor, MI, 1986, pp. 1229–1235.

Schirmer, R. E. and Gargus, A. G., "Applications of Remote Chemical Sensing Using Fiber Optics and UV-VIS-NIR Spectroscopy," *American Laboratory*, 18(12), 1986, pp. 30–39.

Seitz, W. R., "Chemical Sensors Based on Fiber Optics," *Analytical Chemistry*, 56(1), 16A–34A, 1984.

Workman, J., Jr., "Imaging, Chemometrics and New Developments in Sensor Technologies," *Standardization News*, October 2002, pp. 23–25.

© 2003 by Béla Lipták

8.24 Fluoride Analyzers

J. S. JACOBSON (1974, 1982) **A. T. BACON** (1995), **REVIEWED BY R. R. JAIN**
B. G. LIPTÁK (2003)

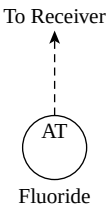

Flow Sheet Symbol

Principles of Operation:
A. Detector tubes
B. Electrochemical
C. Paper tape
D. Ion mobility spectrometry
E. Infrared spectrometry
F. Ion-specific electrodes
G. Silicon dioxide sensors
H. Ion chromatography
I. Titration
J. Colorimetric
K. Gas chromatography

Materials of Construction: Surfaces of equipment contacting fluoride should be stainless steel, Teflon, epoxy, polyethylene, or polypropylene

Concentrations Measured: Monitoring for worker protection is usually in the 0- to 10-ppm range. Leak detection in the surroundings of hydrogen fluoride (HF) handling equipment requires sensitivity in the high parts per million (ppm) range. Monitoring for low-level environmental damage may require sensitivity in the parts per billion (ppb) range.

Sensitivity Range:
A. 0.1 to 20 ppm
B. Low ppm
C. Low ppm
D. 0.05 to 10 ppm
E. Low to mid ppm
F. Low ppb to high ppm, function of sampling time, volume
G. Qualitative response to high ppm levels
H–K. Measurement is usually in the ppm range; sensitivity depends on sampling parameters.

Calibration: Calibration of vapor analyzers usually is performed with permeation-type devices or with calibrated gas standards. Liquid phase analyzers are calibrated using solutions of an appropriate fluoride compound such as sodium fluoride.

Accuracy:
A. ±20% of actual measurement at low humidities, inaccurate at high humidities
B–D. ±10% of full scale
E. Varies with type of instrument and humidity level
F, H–K. These laboratory and automated techniques are capable of providing high accuracy (±3% of actual measurement) under ideal conditions, but this is often compromised by inaccurate sample collection practices.
G. Qualitative only

Cost:
A. $3/analysis, $50/sampling kit
B. $1000 to $3000
C. $3500/point
D. $17,000

© 2003 by Béla Lipták

E. $9000 (common IR) to $90,000 (FTIR)
F. $500 for electrode; $1000 to $3000 for associated electronics (for water/lab analysis); $30,000 to $80,000 for automated system
G. $1400/point
H. $10,000 to $20,000 (lab method)
I. $500 (lab method)
J. $1000 to $5000 (lab method); $25,000 (automated system)
K. $10,000 to $20,000 (lab method)

Partial List of Suppliers:

Alltech Associates Inc. (www.alltechweb.com)
Davis Inotek (www.davisontheweb.com)
Dionex Corp. (H) (www.dionex.com)
Environmental Technologies Group (D, G) (www.envtech.com)
Fisher Scientific (I) (www2.fischersci.com)
Hanna Instruments Inc. (www.hannainst.com)
K-Patents Inc. (www.kpatents.com)
Sensidyne (A, B) (www.sensidyne.com)
Thermo Gas Tech (www.gastech.com)
Thermo Orion (www.thermo.com)
Tytronics & Nemetre (www.tytronics.com)
Zellweger Analytics (www.zelana.com)

INTRODUCTION

The number of analytical techniques available for the analysis of fluoride is fairly large.[1] In the past, several of these techniques were only used in the laboratory. Table 8.24a lists a variety of automatic and manual methods for the detection of fluorides in ambient air, stacks, and process streams. In order to select the most appropriate method for a given application, the physical state and properties of the fluoride compound must be taken into consideration.

TYPES OF FLUORIDE COMPOUNDS

Fluorides can exist as gases, liquids, and solids. The most common form of fluoride is hydrogen fluoride (HF). This compound is very volatile. Its boiling point is 66.9°F (19.4°C), and therefore it is most often analyzed in the vapor state. All the methods that are described as gas or vapor fluoride analyzers detect this compound.

Other compounds, such as UF6, which exist in the vapor phase, hydrolyze quickly in ambient air or solution to form

TABLE 8.24a
Orientation Table for Fluoride Measurement Methods

	Automatic or Manual Method	*Suitable for Water Analysis*	*Gas or Particulate Measurement*	*Suitable for Stack/Process Monitoring*	*Suitable for Organic Fluoride Monitoring*
Tubes	M	No	G	No	Yes[d]
Electrochemical	A	No	G	Some[c]	No
Paper tape	A	No	G	Some[c]	No
Ion mobility spectrometry	A	No	G	Yes	Yes[d]
Ion-specific electrodes	A/M[a]	Yes	G/P[b]	Some[c]	No
Silicon dioxide sensor	A	No	G	Leak detection	No
Ion chromatography	M	Yes	G/P[b]	Some[c]	No
Titration	M	Yes	G/P[b]	Some[c]	No
Colorimetric	A/M[a]	Yes	G/P[b]	Some[c]	No
Gas chromatography	A/M[a]	Yes	G	Some[c]	Yes
Infrared	A	No	G	Some[c]	Yes

[a]Manual method can be performed in lab; automatic systems are available.
[b]Particulate measurement requires special collection techniques.
[c]Suitability for stack monitoring depends on moisture present, interference, etc.
[d]Required pyrolysis equipment available from manufacturer; other methods may be adapted with custom equipment.

© 2003 by Béla Lipták

HF, and thus can be analyzed indirectly by these methods.[2] Other liquid and gaseous fluorides are much more stable and do not easily form HF. These compounds must be broken down prior to analysis. A common method of conversion is thermal decomposition, which is followed by analysis of the resulting HF.

Many solid fluorides are soluble in water and form fluoride ions. If fluoride is present in the air in the form of fine particles, these compounds can be collected on filters and analyzed by wet laboratory or automated methods. Since the automated wet methods operate by impinging an air sample into a wet collection stream, if total fluoride concentration measurement is required,[3,4] care must be taken to assure that the particles are freely admitted into the collection vessel.

Other fluoride-containing solids are not water soluble and require thermal decomposition at very high temperatures prior to analysis as HF.

ANALYZER TYPES

In most cases, the goal of the analysis is to determine the quantitative amount of fluoride in a sample. In other cases, only the presence of HF needs to be determined. Qualitative sensors such as silicon dioxide are used to detect HF leakage from valve connections and other joints. These sensors do not provide quantitative information.

Most other devices discussed in this section provide some degree of quantitative information.

Analyzers are also grouped according to their operation, which can be automatic or manual. Purely manual devices such as detector tubes require an operator to collect and read the sample. Some of the manual laboratory techniques have been automated and depend on colorimetric, ion-specific electrodes and gas chromatography (GC) techniques for their analysis. Yet other analyzers are fully automatic and do not require operator attention, except for maintenance.

Fluoride analyzers are also grouped on the basis of the sample phase into vapor and liquid analyzers. In the case of ion-specific electrodes, titration, and colorimetric methods, fluoride analysis requires an aqueous sample. On the other hand, the concentration of airborne fluoride is determined by using an impinged or absorbed sample. The remaining techniques are used for analysis of the vapor phase.

The selection of an analyzer for a particular application will depend on the type of process sample, which is to be monitored, cost, accuracy, speed of response, range, and frequency of maintenance. These considerations are discussed below.

Gas and Vapor Analyzers

Detector Tubes These devices utilize a hand-operated pump to draw a known volume of air through a calibrated tube. The fluoride concentration in this case is indicated by the resulting color. The initial investment in equipment is very low, but this method is acceptable only if infrequent measurements are sufficient. Detector tubes are commonly used for spot monitoring in industrial hygiene applications.

Electrochemical Cells An air sample is presented to the cell, either actively or passively (Figure 8.24b). The sample permeates into the cell, usually through a membrane, where an electrochemical reaction produces a current proportional to the concentration. The initial cost is relatively low. Some types require fairly high maintenance, although this is less of a concern on more modern designs. Cells are most often used in ambient air monitoring and are not easily adapted for process control. Some models are prone to freezing at low temperatures and do not operate well at humidity extremes.

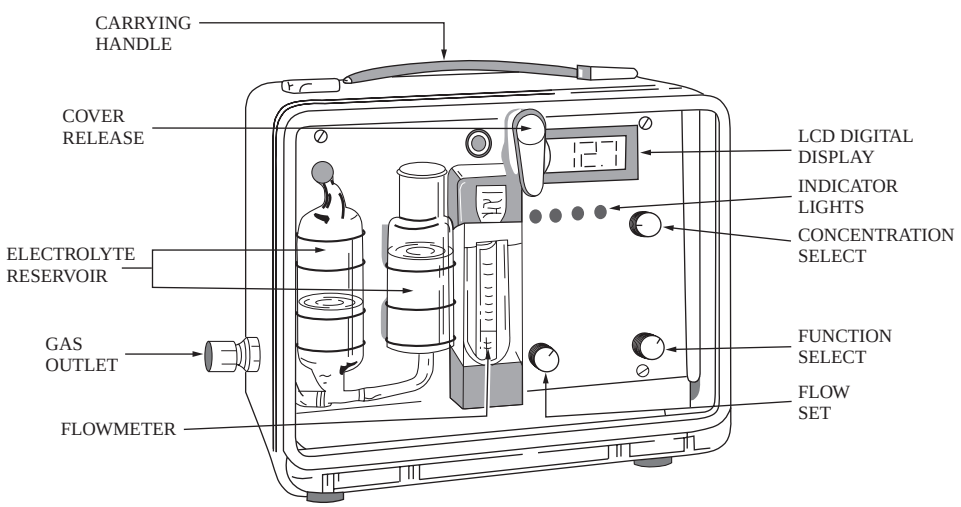

FIG. 8.24b
Portable gas monitor with electrochemical sensor. (Courtesy of Sensidyne Inc.)

© 2003 by Béla Lipták

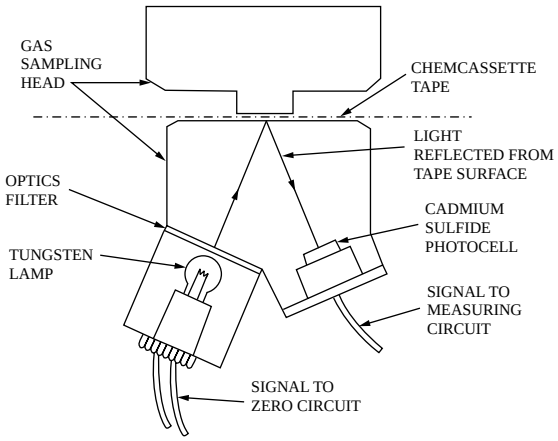

FIG. 8.24c

Fluoride concentration can be detected by monitoring the reflected light intensity from a chemically treated tape. (Courtesy of Zellweger Analytics, which MDA Scientific Inc. joined.)

Paper Tape An air sample is drawn through a chemically treated tape, and the colorimetric change is read with a photometer (Figure 8.24c). The tape is automatically advanced as fluoride is detected. The initial cost is moderate, but expendables can be expensive if fluoride is constantly present. Tape has the advantage of not requiring an independent calibration, as each tape is calibrated at the factory. Tape is most often used for ambient air monitoring and is easily adapted for multipoint sampling. Tape is not commonly used for process control or outdoor applications.

Ion Mobility Spectrometry Air is drawn into the instrument and the sample permeates through a membrane into a cell, where it is ionized by a small radioactive source. The analysis technique is similar to that of time-of-flight mass spectrometry (MS) but is performed at atmospheric pressure. The initial cost is moderately high, but maintenance is minimal.

This technique has found wide acceptance in the petrochemical industry due to its high reliability, good interference rejection, and ability to operate accurately at extremes of ambient temperature and humidity. This technique is most often used for outdoor ambient air monitoring and can be adapted for process control and stack monitoring. The chief disadvantage is the requirement for a constant supply of dry instrument air, and purging in flammable environments.[5,6]

Infrared Spectroscopy A gas sample is drawn into an optic cell where a characteristic infrared (IR) absorbance is used to determine concentration (Section 8.27). Several types are available, including nondispersive infrared (NDIR) and Fourier transform infrared (FTIR). Prices range from moderate to expensive, depending on analyzer type and features. Sensitivity is determined mainly by path length. In most cases, water vapor produces a strong interference, masking HF response.

The advantage of FTIR is the ability to monitor for several gases with the same analyzer. IR analyzers are typically used in applications such as stack monitoring, after sample cleanup. IR analyzers may also be used to monitor for certain fluorinated organic compounds.

Ion-Specific Electrodes The concentration of fluoride ions in solution is monitored by using an ion-selective electrode (Section 8.28), which provides a millivolt output signal in response to the activity of fluoride ions in the solution. The fluoride-selective ion electrode, in conjunction with a reference electrode, develops its potential across a doped fluoride crystal membrane. When the electrode is placed in a solution, the ions from the solution move to the surface of the membrane and the electrical charge of the ions creates a potential difference across the membrane. At equilibrium, this potential difference is proportional to the activity of the fluoride ions in the solution.

These probes are inexpensive for laboratory applications but become expensive when used as automatic on-line monitors in continuous measurement applications. The advantages of selective-ion detection of fluoride include their selectivity, large dynamic range, and good sensitivity.

Disadvantages include relatively high maintenance, which includes the need for buffering the solution sample using concentrated acetate or citrate for pH adjustment between 5.3 and 5.8. In addition, CDTA or EDTA complexing agents are also used to prevent interference from metals. The electrodes are very sensitive to temperature effects and must be carefully controlled. This method is most often used for lab analysis and in applications that demand the selectivity and sensitivity provided.

Silicon Dioxide Sensors Atmospheric HF causes etching of a thin layer of silicon dioxide. A light source and photo-optic receiver are used to monitor the rate of etching. Initial and operating costs are both low. Little maintenance is required other than periodic replacement of the disposable sensor tip. Because of the highly specific nature of the reaction and the ability to respond quickly to relatively high localized concentrations around flanges, etc., this method is most commonly used to monitor for leaks. The output is essentially qualitative.

Laboratory Methods The most common laboratory methods are ion-specific electrodes, ion chromatography, titration, and colorimetric methods.[8] Ion-specific electrodes have been discussed above. Ion chromatography uses modified high-performance liquid chromatography equipment. Although expensive, this equipment can also determine a large number of other ions at the same time. Titration and colorimetric methods rely upon chemical reactions, which produce a color change. Both of these methods rely upon common lab equipment and procedures. All of these lab methods can be used in the analysis of water samples. Automated and semiautomated equipment exist for most of these methods.

© 2003 by Béla Lipták

Organic Fluoride Analysis

The two most common methods of analyzing organic fluorides, such as Freons, are gas chromatography and pyrolysis followed by any of the conventional analysis procedures. GC methods may make use of a universal detector and simply rely on retention time to identify and quantitate the sample, or a halogen-specific detector such as a thermionic bead may be used.[9] Pyrolysis kits are available for use with detector tubes.

Other Methods

Two other methods have been demonstrated as having potential for the detection of fluoride: mass spectrometry and open-path laser-based systems. Commercial MS analyzers are available for lab and process use, and these instruments have the theoretical capability to identify both organic and inorganic fluorides in the gas phase, although their use would be very limited because of the relative complexity of these devices. Laser-based open-path systems have been demonstrated in the prototype stage but are not yet commercially available.

References

1. Korolkoff, N. O., "Survey of Toxic Gas Sensors and Monitoring Systems," *Solid State Technology,* December 1989.
2. Bostick, K. D. and Angel, E. C., "Evaluation of the Sensidyne Toxic Gas Sensor for HF Vapor," Report K/PS—5076, prepared by Oak Ridge Gaseous Diffusion Plant, Oak Ridge, TN, September 1987.
3. Pack, M. R. and Hill, A. C., "Further Evaluation of Glass Fiber Filters for Sampling Hydrogen Fluoride," *Journal of Air Pollution Control Association,* Vol. 15, 1965, pp. 166–167.
4. Mandl, R. H., Weinstein, L. H., Weiskopf, G. J., and Major, J. L., "Separation and Collection of Gaseous and Particulate Fluorides," Paper CD-25A, Second International Clean Air Congress, Washington, D.C., 1970.
5. Bacon, A. T., "Ion Mobility Spectroscopy: A New Method of Monitoring for Hydrogen Fluoride, Ammonia, and Other Industrial Gases," Paper #258, Pittsburgh Conference, New York, March 1990.
6. Bacon, A. T., Getz, R., and Reategui, J., "Ion Mobility Spectrometry Tackles Tough Process Monitoring," *Chemical Engineering Progress,* June 1991.
7. Elfers, L. A. and Decker, C. E., "Determination of Fluoride in Air and Stack Gas Samples by Use of an Ion Specific Electrode," *Analytical Chemistry,* Vol. 40, 1968, pp. 1658–1661.
8. Farrah, G. H., "Manual Procedures for the Estimation of Atmospheric Fluorides," *Journal of the Air Pollution Control Associations,* Vol. 17, 1967, pp. 738–741.
9. Annino, R. and Villalobos, R., "Application of Process Gas Chromatographic Instrumentation to Environmental Monitoring," *American Laboratory,* October 1991, pp. 15–26.

Bibliography

Adams, V., *Water and Wastewater Examination Manual,* Chelsea, MI: Lewis, 1990.

Evans, R., *Potentiometry and Ion Selective Electrodes,* New York: John Wiley & Sons, 1987.

Fresenius, W., *Water Analysis,* Berlin: Springer-Verlag, 1988.

Groves, B. and Howard, V., *Fluoride: Drinking Ourselves to Death,* Newleaf, Miami, FL, 2002.

National Institute of Occupational Safety and Health, *Manual of Analytical Methods,* 2nd ed., Vol. 3, Method S176, 1977–1980.

National Institute of Occupational Safety and Health, *Manual of Analytical Methods,* 3rd ed., Methods 7902 and 7903, 1984.

Occupational Safety and Health Administration, *Analytical Methods Manual,* Method ID110, 1985.

Occupational Safety and Health Administration, *Chemical Information Manual,* Method IMIS1270, 200.

Wagner, B. M., *Health Effects of Fluoride,* Washington, D.C.: National Academy Press, 1993.

© 2003 by Béla Lipták

8.25 Hydrocarbon Analyzers

R. J. GORDON (1974, 1982) **B. G. LIPTÁK** (1995)
I. VERHAPPEN (2003), **WITH REVIEW COMMENTS BY F. D. MARTIN**

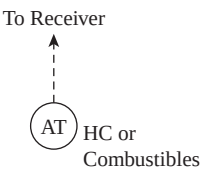

Flow Sheet Symbol

Type of Measurements:
A1. Total hydrocarbon by flame ionization
B1. Methane by chromatography
B2. Methane by flame ionization
B3. Methane by mass spectrometry
C1. Hydrocarbon classes by flame ionization
C2. Hydrocarbon classes by mass spectrometry
C3. Hydrocarbon classes by infrared
D1. Individual hydrocarbons by chromatography
E. Hydrocarbon dew point in natural gas (chilled mirror)
F. Ion mobility spectroscopy
G. Laser-induced absorption radar

Reference Method: Gas chromatography with flame ionization for nonmethanes

Sensitivity: 0.1 ppm (A1, B2, C1); chromatograph followed by electrochemical sensor can detect 50 ppb

Ranges: From 0–10 ppm to 0–100% lower explosive limit (LEL)

Inaccuracy: ±1%

Costs: Infrared and flame ionization types cost $10,000 to $20,000; chromatographic units cost $25,000 to $100,000; and mass spectrometers start at $50,000 and can reach $250,000. A portable chromatograph with electrochemical detector costs $15,000.

Partial List of Suppliers: (See also Sections 8.12, 8.16, 8.39, 8.58, and 8.59)
Agar Corp (www.agarcorp.com)
AIL Systems Inc. (www.edocorp.com)
Air Instruments & Measurements Inc. (www.aimanalysis.com)
Boreal (www.boreal-laser.com)
Carlo Erba (Italy) (www.carloerbareangenti.com)
CEA Instruments Inc. (www.ceainstr.com)
Draeger (www.draeger.com)
E.G. & G. Chandler Engineering (formerly Perkin Elmer), (www.egginc.com)
Forney Systems (formerly Anarad Inc.) (www.anarad.com)
General Monitors (www.general-monitors.com)
Gow-Mac Instrument Co. (www.gow-mac.com)
Heath Consultants Inc. (www.heathus.com)
Invensys (formerly Foxboro Co.) (www.invensys.com)
Michell Instruments Ltd. (www.michell.co.uk)
Mocon Inc. (formerly Baseline Industries Inc.) (www.baselineindustries.com)
MSA Instrument Div. (www.msanet.com)
OptiGas (www.optigas.com)
SAES Group (formerly Molecular Analytics) (www.ionpro.com)
SensIR Technologies (www.sensir.com)
Siemens Applied Automation (www.sea.siemens.com/ia/)
Spectrex (www.spectrex-inc.com)
ThermoOnix (formerly Fluid Data/AMSCOR) (www.thermo.com)
Zellweger Analytics (www.zelana.com)

© 2003 by Béla Lipták

INTRODUCTION

Hydrocarbon analysis is discussed in several sections in this chapter, including Section 8.12 on chromatographs, Section 8.16 on combustibles detection, Section 8.39 on oil-in-water measurements, and Section 8.58 on total organic carbon analysis. Therefore, it is advisable to also refer to these sections when investigating the features and capabilities of a particular hydrocarbon analyzer type.

The hydrocarbons comprise a large class of individual components (Table 8.25a). The most abundant hydrocarbon, methane, is nonreactive in photochemical reactions and is a less hazardous air pollutant. The remaining hydrocarbons vary widely in their complexity and reactivity. For this reason, the type of hydrocarbon analysis selected depends on the purpose for which data are needed.

To obtain highly detailed analyses for numerous hydrocarbons requires expensive and sophisticated equipment, whereas a single measurement for total hydrocarbons is simpler and somewhat less expensive. There are also methods of intermediate complexity, which permit determination of properties without identification of the individual stream components.

TABLE 8.25a
Atmospheric Hydrocarbon Analyzers

	Hydrocarbon	
Type	*Method*	*Limitations and Interferences*
Total (as carbon)	FID	Some response to carbon-containing nonhydrocarbons
Methane	GC	Expensive equipment (can also be used for carbon monoxide)
Methane-only subtractive	Column preparation fussy column and FID	
	Mass spectrometry	Freeze-out required, expensive
Aromatics, olefins, paraffins	Subtractive columns and FID	Column preparation fussy
	Mass spectrometry	Freeze-out required, expensive, data reduction requirements large
	Infrared spectrometry	Freeze-out required, expensive, not total class coverage
	Ion mobility spectrometry	Clean sample required, limited knowledge in industry
	Laser-induced absorption	Expensive, specialized support required
	Perimeter monitoring	Concentration/unit length rather than point value
Individuals	GC	Expensive, data reduction requirements large

ANALYZER TYPES

Flame Ionization Detectors

Flame ionization detectors (FIDs) are used to measure total hydrocarbons at low concentrations such as for pollution, leakage, or safety monitoring. In the FID analyzer, a flame of pure hydrogen, which contains almost no ions, is used. When even traces of organic compounds are introduced by the sample, the hydrogen flame ionizes the carbon atoms, resulting in a large number of ions in the flame. The resulting ionic current is measured as an indicator of hydrocarbon concentration. In dual-flame detectors, the concentration of total hydrocarbons and methane can be identified separately.

Flame ionization detection is the most suitable means of analysis for most hydrocarbons at the levels found in polluted air. It may be used alone for the measurement of total hydrocarbons or as a detector after separation by a column device such as a gas chromatograph. In FID analyzers, a sensitive electrometer detects the increase in ion intensity in a hydrogen flame when a sample containing organic compounds is introduced. The response is approximately in proportion to the number of organically bound carbon atoms in the sample, so the detector is basically a carbon atom counter. Carbon atoms bound to oxygen, nitrogen, or halogens, however, give a reduced response.

There is no response to nitrogen, carbon monoxide, carbon dioxide, or water vapor. The results are usually expressed in terms of the calibration gas used, e.g., parts per million (ppm) carbon as methane. The response is rapid and can be as sensitive as 0.1 ppm. The response to various hydrocarbons is not perfectly uniform, and such variations should be taken into account in interpreting FID data. The FID analyzer is a reference method for total hydrocarbons in U.S. Air Quality Standards. Basically, it is an air-metering device attached to a FID (Figure 8.25b).

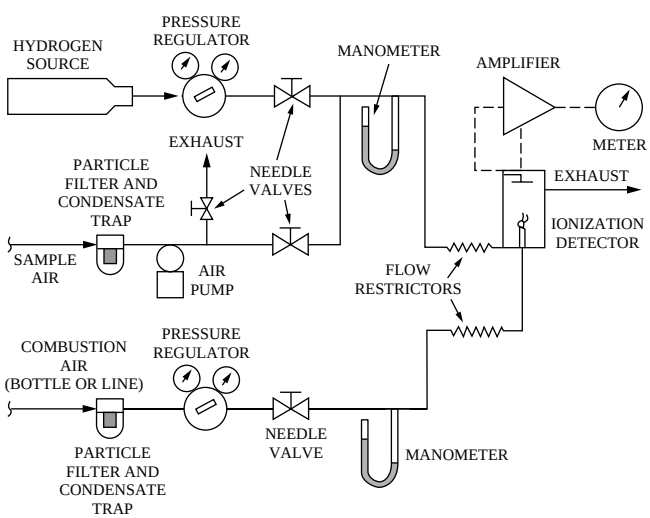

FIG. 8.25b
Hydrocarbon analyzer and hydrogen FID.

© 2003 by Béla Lipták

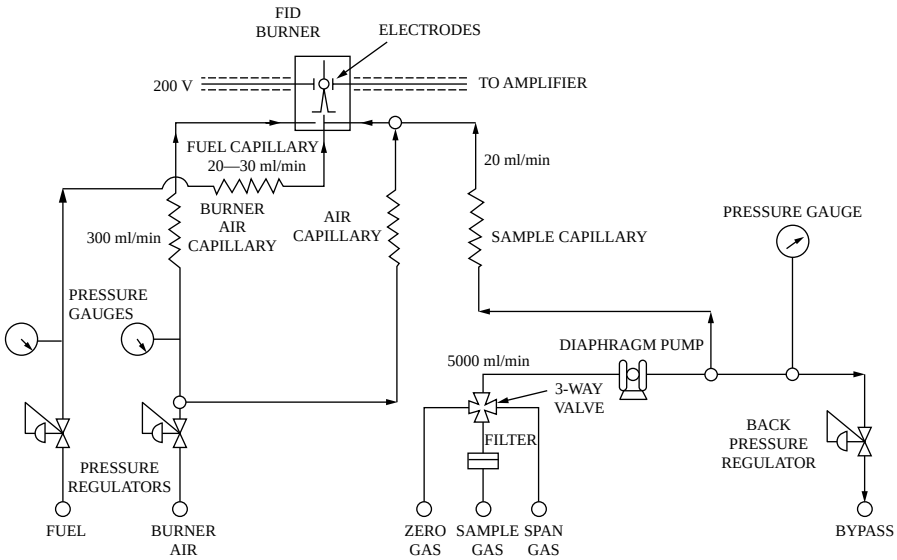

Fig. 8.25c
Sampling system for hydrocarbon analysis by FID.

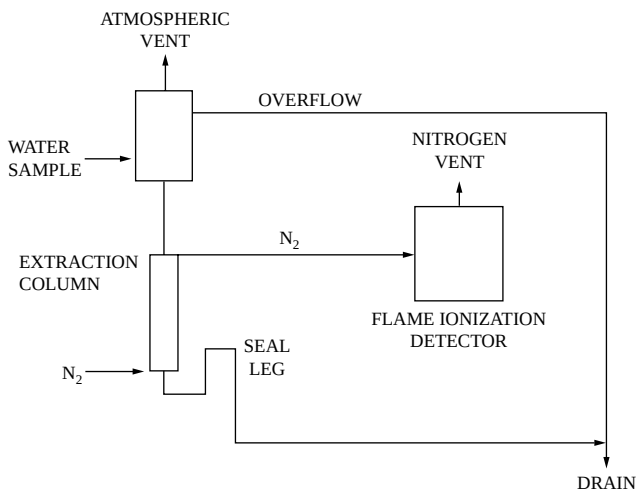

FIG. 8.25d
Detection of purgeable hydrocarbon concentration in water samples. (Courtesy of ThermoOnix, formerly Fluid Data/AMSCOR.)

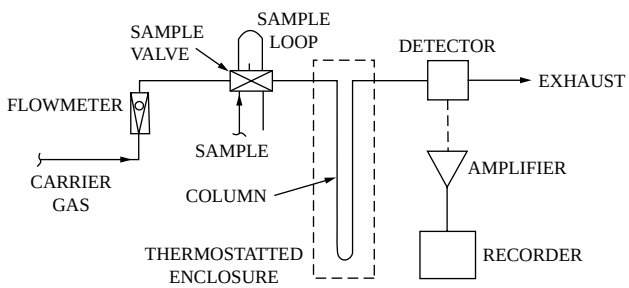

FIG. 8.25e
Gas chromatograph.

In microprocessor-controlled hydrocarbon analyzers, up to eight channels can be obtained for the simultaneous analysis of eight samples. Manufacturers also provide sampling systems (Figure 8.25c), which make remote calibration and automatic self-checking possible.

If discrete component analysis is not required, it is also possible to use liquid samples in conjunction with FID-type hydrocarbon analyzers if the hydrocarbons can be purged by nitrogen from the continuous liquid sample. Such a sampling system is shown in Figure 8.25d, where a nitrogen extraction column is used, serving to remove the hydrocarbon, which can be removed by purging. Here the nitrogen is introduced at the bottom of the extraction column, and as it travels upward, it removes the purgeable hydrocarbons. The overflow level in the head tank, which seals the top of the column as the purge nitrogen leaves it, holds the extraction column pressure constant.

Gas Chromatography

The only practical method for the measurement of specific hydrocarbons is gas chromatography (GC). In GC, the basic apparatus (Figure 8.25e) is a carefully prepared tubular column of a finely divided solid with provisions for passing a steady flow of a carrier gas (often helium) through it (Section 8.12). The column is temperature controlled and the packing usually supports or is coated by a nonvolatile liquid phase.

Preceding the column, there is a means for sample introduction (and sometimes sample splitting), and following the column is a detector. A high-sensitivity column usually employs a FID. There are a great many optional variations in the makeup of a GC instrument, involving sample valves, precolumns, columns, programmed temperature and pressure changes, stream splitters, and detectors.

© 2003 by Béla Lipták

Traditionally, the output was recorded on a strip chart (possibly with a peak integrator) or converted to digital form for computer handling. In full-scale analyses for scores of hydrocarbons, data reduction from analog strip-chart recordings becomes very tedious and time-consuming. Most gas chromatographs use a computer interface to analyze and report the results of each analytical cycle as well as a wealth of related equipment health conditions.

Supplemental techniques increase the utility of GC for atmospheric hydrocarbons. A common method is to pass a sample of air through a small freeze-out trap, sweep out the air with helium, and then warm the trap and introduce the condensables to the GC column in one concentrated slug. This extends the lower limits of sensitivity to the parts per billion range. Subtractive columns may be in parallel or in series with conventional columns to help relate the various recorded peaks to specific hydrocarbon classes.

Calibration Complete GC calibration would require hundreds of different pure hydrocarbons and is never fully achieved. There are usually few unknowns left in careful work except in the more complex higher-molecular-weight ranges. Calibration is based on the fact that under carefully reproduced conditions, a given hydrocarbon will always require the same length of time to pass through the column to the detector. Ambiguities arising where components overlap may be resolved by change in column packing, increasing the analytical cycle time and column length, or sometimes by the use of subtractive columns. An elaborate but useful technique is to attach another analytical instrument such as an infrared (IR) or mass spectrometer to the outlet of the detector for peak identification.

In Figure 8.25f an instrument is described for combined analysis of methane and carbon monoxide. This is a simple GC, set up to determine methane, with a programmed arrangement of valves and a catalytic carbon monoxide-to-methane converter. As a result, the readout has two peaks, one for methane directly and the other for methane formed by reduction of carbon monoxide.

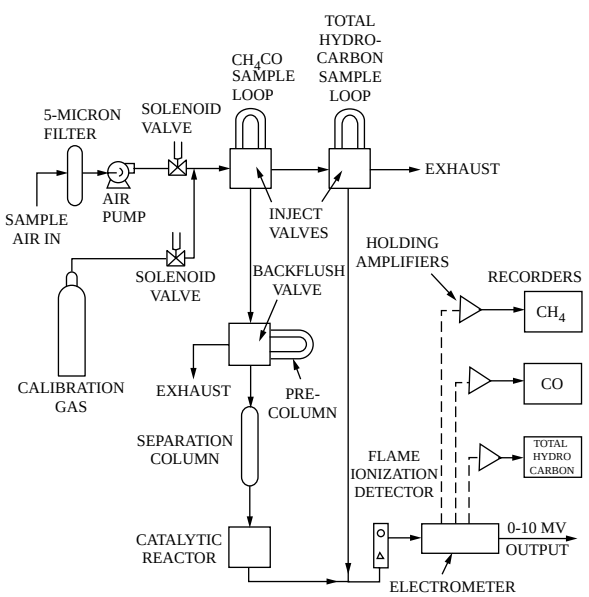

FIG. 8.25f
Methane and carbon monoxide analyzer.

Nonmethane Hydrocarbons A column of adsorptive charcoal may be treated with methane just until breakthrough occurs; that is, no more methane will be adsorbed, but other hydrocarbons are still retained. This column can then be used with a FID as an analyzer for methane only. Used in parallel or in switched alternation with the detector without any column, it allows determination of nonmethane hydrocarbons by difference.

Reactive Hydrocarbons Certain specially prepared columns can be used to adsorb specific hydrocarbon classes. These are useful in GC and could be used with a simple FID analyzer alone to give analysis by broad classes. A column of crushed firebrick supporting mercuric sulfate will adsorb olefins and acetylenes, and one of palladium sulfate will then adsorb aromatic hydrocarbons (except benzene). A combination of these subtractive columns has been applied successfully to automobile exhaust analysis and for use in atmospheric work.

Spectrometric Methods

Either infrared or mass spectrometry may be used with considerable advantage for individual hydrocarbon determination, although the sensitivity of both methods would require concentration such as by a freeze-out trap if used for atmospheric measurements. Both types of instruments are complex and expensive. Since the calibration requirements are about equal to those needed for GC, the data interpretation is generally more complicated and the extent of coverage is less; these methods have been widely supplanted by GC for atmospheric hydrocarbon detection work. These instruments may be useful for analysis of a particular type or class of hydrocarbon and might make it unnecessary to set up a gas chromatographic capability in some cases.

Laser-Induced Doppler Absorption Radar Laser-induced Doppler absorption radar (LIDAR) can be used to remotely measure chemical concentrations in the atmosphere. Two different laser wavelengths are selected so that the molecule of interest absorbs one of the wavelengths while the other wavelength is selected to be in a region of minimal interference. The difference in intensity of the two returned signals is then used to determine the concentration of the gas being measured using the Lambert–Beer law.

By measuring the time taken for the light to travel and return, it is also possible to determine the distance from the base station to the measurement point. It is therefore possible to use LIDAR to "map" the chemical composition of an emission source in three dimensions, and from a great distance.

© 2003 by Béla Lipták

Spectroscopy Perimeter Monitoring Perimeter monitoring can be done with both ultraviolet (UV) and IR spectral equipment. The selection between IR and UV is determined by the absorption of the gases to be measured. Typical installations have a transceiver at one end and a retro-reflector at the far end. The light, typically at two wavelengths (reference and measurement), is transmitted to the mirror at the other end of the path of interest and then reflected back to a receiver in the same electronics enclosure. The resultant measurement is an average of the concentration of the gas of interest over the distance between the two units.

Newer models have separate transmitter and receiver assemblies, thus making it possible to measure around corners by using the appropriate reflectors. Path lengths of several hundred meters are typical, though distances of greater than 1 km are possible.

Ion Mobility Spectroscopy

Since this technique is not often used to monitor hydrocarbons, it is mentioned here only for the sake of completeness.

This technique is best suited to detect elements in Group VIIA of the periodic table (Cl, Fl, I, etc.), though the range is being expanded and has also been applied to the detection of ammonia as well as other chemical agents, especially those associated with explosives. While in theory this technique can measure multiple gases, the selective membranes, dopants, diluents, and spectrometer configurations are normally optimized to measure a single gas.

Hydrocarbon Dew-Point Meter

The dew point of natural gas is that temperature at which significant condensation starts to be formed on a chilled surface. A chilled-mirror instrument of the dark-spot design can be used for this measurement (Figure 8.25g). With this technique, almost invisible films, having sensitivities on the order of 1 ppm, become detectable. In this instrument, the optical surface is provided with a V-shaped depression.

When the surface is dry, the reflection from it results in a dark spot (as shown in Figure 8.25g). As hydrocarbon condenses on this surface, the scattered light intensity in the dark-spot region is reduced. Optical fibers are used to detect this reduction of intensity, while miniature thermocouples measure the surface temperature of the mirror.

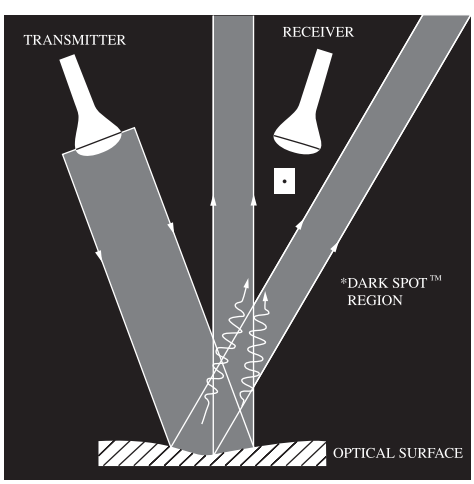

FIG. 8.25g
Measurements principle of the dark-spot-type chilled-mirror analyzer, which is used to measure the hydrocarbon dew point in natural gas. (Courtesy of Michell Instruments Ltd.)

CALIBRATION METHODS

Only dynamic calibration is completely satisfactory. In this procedure, known concentrations of the gases to be measured are passed into the analytical system, preferably in exactly the same way as the unknown samples are collected. This may be difficult to accomplish because of low concentrations or because some components might condense or react with other components.

Standard calibration mixtures of one or several of the common hydrocarbons in carrier fluids are available commercially in high-pressure gas cylinders. These should always be checked against a reference standard, or at least against a previously calibrated analyzer. If much calibration is necessary, it may be useful to set up a gas-handling and dilution system to prepare standard mixtures.

One fairly simple technique for hydrocarbons, such as butane (which can be liquefied at moderate pressure), uses permeation tubes. These are sealed tubes of a specific plastic, partially filled with liquid hydrocarbon. As long as some liquid remains, the hydrocarbon will effuse through the walls of a given tube at a rate depending only on temperature. To generate a known concentration, carrier gas is passed over the tube at a controlled rate in a temperature-controlled vessel. The tube may be calibrated gravimetrically.

In another technique, used to calibrate atmospheric hydrocarbon analyzers, a known amount of hydrocarbon is added by syringe or by crushing an ampoule, either in a large rigid vessel of known air volume or into the metered flow of air passing into a plastic bag. The bag must be of inert plastic; it has the advantage of collapsing as the sample is withdrawn, whereas a rigid vessel must be large in relation to the sample size in order to avoid substantial pressure differentials.

ASSESSMENT

For total hydrocarbon measurement, the flame ionization analyzer is the most generally accepted detector. For proper operation, it requires the attention of operators and it also consumes compressed gases, but it is reliable and accurate.

Nondispersive infrared (NDIR) sensors can only identify hydrocarbon classes, whereas two-wavelength IR detectors are able to identify individual hydrocarbon species. In this design, sensitivity is traded for specificity.

© 2003 by Béla Lipták

The methods that are capable of identifying specific classes of hydrocarbons are complex and are less precise or reliable, but they are not much more expensive than the flame ionization analyzer. (The spectrometer methods, unless already in use for other reasons, are not as competitive.)

If individual hydrocarbon determination at low concentrations is required, there is no good alternative to GC (frequently augmented with a freeze-out step), even though the data reduction is time-consuming (if manual) or expensive (if computerized), and calibration requirements are also demanding.

Ion mobility spectroscopy and the other spectrometric techniques are only used in special applications.

Bibliography

Annino, R. and Villalobos, R., *Fundamentals of Process Gas Chromatography,* Research Triangle Park, NC: ISA, 1991.

ASTM Standard E1982-98, "Standard Practice for Open Path Fourier Transform Infrared (OP/FT-IR) Monitoring of Gases and Vapors in Air," West Conshohocken, PA: American Society for Testing and Materials, 1982.

Bacon, A. T., "Ion Mobility Spectroscopy Applications for Continuous Emission Monitoring," Analysis Division Spring Symposia, Farmingham, MA: ISA, 1996.

Burgess, D., "The Flammability Limits of Lean Fuel-Air Mixtures," in *Analysis Instrumentation,* Vol. 12, Research Triangle Park, NC: ISA, 1974 (ISA-AID74414).

Clansky, K. B., "The Chemical Guide to the OSHA Hazard Communications Standard," Burlinganac, CA: Roytech, 1991 (revised annually).

Dundas, M. E., "New Technologies in Infrared Hydrocarbon Detection," ISA Conference, Houston, TX, October 1992.

Gokeler, U. and Maurer, T., "Area Monitoring of Specific ppb Level Constituents Using Process Gas Chromatography," Analysis Division Spring Symposia, Denver, CO: ISA, 2002.

Kagann, R. H. and Kricks, R. J., "Improvements in Open-Path FTIR for Measurement of Ambient Air at Industrial Facilities," Analysis Division Spring Symposia, Phoenix, AZ: ISA, 1999.

Lowell, F., Pevoto, J., Silvers, R., and Converse, J. G., "Static Headspace Technique Applied to Volatile Chemicals Analysis in Dirty Wastewater Stream," Analysis Division Spring Symposia, Farmingham, MA: ISA, 1996.

McKinley, J. J., "Permeation Tubes for Calibration and Validation of Trace Gas Analyzers," Analysis Division Spring Symposia, New Orleans, LA: ISA, 1997.

McKinley, J. J., "Fundamental Considerations for Effective Use of Permeation Tubes for Calibration and Validation of Process Analyzers," Analysis Division Spring Symposia, Research Triangle Park, NC: ISA, 1998.

Kaspersen, P. and Linnerud, I., "Applications of Tunable Diode Laser Spectroscopy in Process Analysis and Control," Analysis Division Spring Symposia, Charleston, WV: ISA, 2000.

Rayburn, S., "The Foundations of Laboratory Safety," Berlin: Springer-Verlag, 1990.

Roczko, A., "Industrial Applications for an Open Path Infrared and Ultraviolet Gas Detector," Analysis Division Spring Symposia, Farmingham, MA: ISA, 1996.

Webber, K. and Bacon, T., "PPB Level Process Monitoring by Ion Mobility Spectroscopy (IMS)," Analysis Division Spring Symposia, New Orleans, LA: ISA, 1997.

Wright, R. S., Kong, E., Bahner, M. A., Clayton, C. A., Nunez, C. M., and Ramsey, G. H., "Analytical Techniques for Measuring Hydrocarbon Emissions from Manufacturers of Fiberglass-Reinforced Plastics," Analysis Division Spring Symposia, Farmingham, MA: ISA, 1998.

© 2003 by Béla Lipták

8.26 Hydrogen Sulfide

D. H. F. LIU (1995) **B. G. LIPTÁK** (2003)

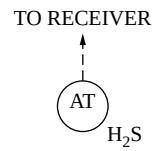

Flow Sheet Symbol

Analyzer Types: Electrochemical gas diffusion, solid-state or gold-film sensors, tape staining, UV photometric, gas chromatography

Ranges: 0 to 50 ppm is typical for ambient air monitors, with maximum range up to 0 to 500 ppm. For process applications, ranges up to 0 to 100% are available.

Inaccuracy: 3 to 5% of full scale for air monitors; 1% of full scale for process analyzers

Costs: Pocket-size, battery-operated monitor costs $600 to $1000; portable microprocessor-based diffusion-type unit costs $2500; for UV photometric and chromatographic analyzers, prices are in excess of $20,000 (see Sections 8.12 and 8.61).

Partial List of Suppliers:

ABB Inc. (www.abb.com)
Alltech Associates Inc. (www.alltechweb.com)
Ametek Process Instruments (www.ametekpi.com)
Amko Systems Inc. (www.amkosystems.com)
Arizona Instrument Co. (www.azic.com)
Bacharach Inc. (www.bacharach-inc.com)
Barton Inst. Ltd. (www.barton-canada.ca)
CD Nova Instruments (cdnova.com)
Davis Inotek (www.davisontheweb.com)
Dionex Corp. (www.dionex.com)
Drexel Western Ltd. (www.drexelwestern.com)
Environmental Technologies Group (www.envtech.com)
Fisher Scientific (www2.fischersci.com)
Gas Analytical (www.gasanalytical.com)
General Monitors (www.generalmonitors.com)
Hanna Instruments Inc. (www.hannainst.com)
Houston Atlas Inc. (www.hobre.com)
Key Safety Devices (www.key-safety.com)
K-Patents Inc. (www.kpatents.com)
Microwatt Control Devices (www.microwattcontrols.com)
MSA Instrument Div. (www.msanet.com)
Novachem BV (www.novachem.com)
Parker Hannifin Corp. (www.parker.com/instrumentation)
Peacock Instr. (www.peacock.ca)
Sensidyne (www.sensidyne.com)
Sierra Monitor Corp. (www.sierramonitor.com)
Spartan Controls (www.spartancontrols.com)
Teledyne Analytical Instruments (www.teledyne-ai.com)
Thermo Gas Tech (www.gastech.com)
Thermo Orion (www.thermo.com)
Tytronics & Nemetre (www.tytronics.com)
Westech Industrial (www.westech-ind.com)
Zellweger Analytics (www.zelana.com)

© 2003 by Béla Lipták

INTRODUCTION

Hydrogen sulfide (H_2S) is a toxic gas found in many industrial environments. It is commonly monitored for personnel safety, environmental protection, and process control. This section will describe the more frequently used commercial instruments for ambient and on-line measurement of H_2S in process gases and liquids.

ELECTROCHEMICAL CELLS

For portable, battery-operated instrumentation for ambient air monitoring, the most common sensors are the fuel-cell-type electrochemical gas diffusion sensors.

Fuel cells convert the chemical energy of fuel and oxygen into electrical energy, while the electrode and the electrolyte remain unaltered. Fuel is converted at the anode into hydrogen ions, which travel through the electrolyte to the cathode, and electrons, which travel through an external circuit to the cathode. If oxygen is present at the cathode, it is reduced by these electrons, and the hydrogen and oxygen ions eventually react to form water.

The electrochemical sensors are available in pocket-size, battery-operated packaging, with replaceable "pop-out" sensors. The advantage of these units is that they do not require pumps or aspirators to pull in the sample, and they are unaffected by wind or variations in relative humidity.

These pocket-size units are usually configured for a number of channels, which might include H_2S, CO, O_2, and CH_4 (Figure 8.26a).

In the sensor, a pair of polarized electrodes is isolated from the ambient air by a gas-permeable membrane. As hydrogen sulfide diffuses through the membrane, an oxidation–reduction reaction occurs and the resulting electrons cause a current flow, which is in proportion to the H_2S concentration in the air.

Some of the limitations include interferences from background gases such as hydrogen, carbon monoxide, ethylene, sulfur dioxide, chlorine, methyl mercaptan, nitric oxide, and nitrogen dioxide. The units are also available as explosion-proof transmitters (Figure 8.26b) for near-ambient temperatures and up to 10-PSIG (0.7-bar) services. The electrochemical sensors are preferred in pure oxygen or in benign atmosphere applications or where ruggedness is less important than accuracy.

GOLD-FILM AND SEMICONDUCTOR SENSORS

Gold films absorb hydrogen sulfide and respond to its concentration by a proportional change in their electrical resistance. These analyzers usually include an internal pump that draws in the ambient air. One advantage of the gold-film sensor is that it is available in the parts per billion (ppb) range, and it is not sensitive to interference by SO_2, CO_2, or CO.

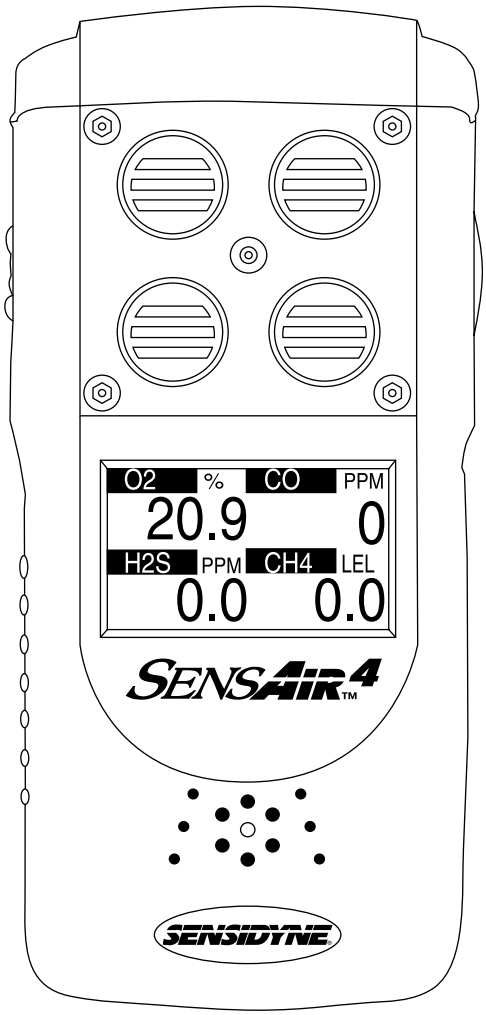

FIG. 8.26a
Pocket-size, battery-operated electrochemical monitor with four channels, including H_2S. (Courtesy of Sensidyne Inc.)

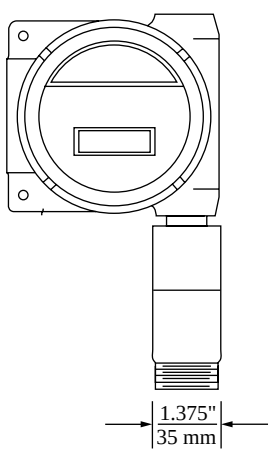

FIG. 8.26b
Diffusion-type electrochemical hydrogen sulfide detector.

© 2003 by Béla Lipták

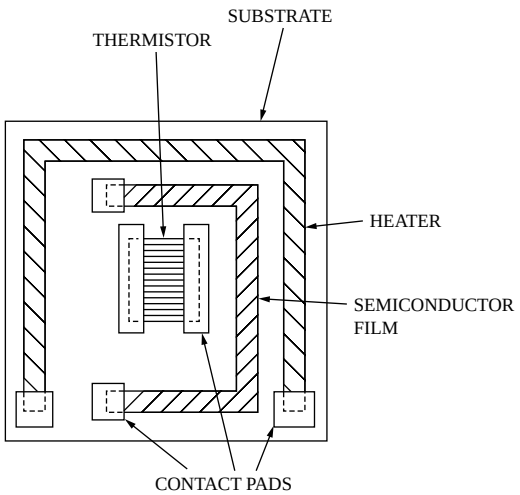

FIG. 8.26c
Schematic of a solid-state H_2S sensor.[1]

Solid-State Sensors

Solid-state sensors are used in combustible gas detection equipment for the measurements of H_2S in ambient air at the parts per million (ppm) level. The advantage of the solid-state approach is that there is no sampling system involved. The solid-state H_2S sensors are formed by depositing thin films on silicon chips, as shown in Figure 8.26c. Separate film layers serve as heaters, temperature-monitoring thermistors, and H_2S-sensitive metal oxide semiconductors. If the semiconductor is heated to a constant temperature in the 150 to 300°C range, a measurable decrease in electrical resistance occurs if exposed to H_2S. The resistance decrease is a logarithmic function of H_2S concentration.

In the case of the solid-state sensor, hydrogen, isopropanol, ethyl, and methyl mercaptan interfere with the measurement. In general, solid-state sensors are preferred to detect high concentrations or to operate under extreme temperatures, vibration, or in corrosive atmospheres.

LEAD ACETATE TAPE STAINING

This type of analyzer system is used by industry for attaining compliance with the U.S. Environmental Protection Agency (EPA) Fuel Gas to Combustion Devices Regulations. It has a history of on-stream field performance and reliability for measuring H_2S in gas streams such as coal gas, natural gas, and mixed propane–butane. It is specific to H_2S. The system's ability to report H_2S levels enables timely corrective actions to be taken to protect against upset, contamination, and corrosion buildup.

Figure 8.26d shows the instrument and its operating principles. Sample at a constant flow rate enters a humidifier where it bubbles through a 5% acetic acid solution. The sample then flows into the reaction window of the sample chamber, where it passes over an exposed surface of paper sensing tape impregnated with lead acetate; the tape is automatically driven by a motor. Hydrogen sulfide reacts with lead acetate to form lead sulfide, causing a brown stain on the paper. The rate of reaction and resulting rate of color change is proportional to the concentration of H_2S in the sample.

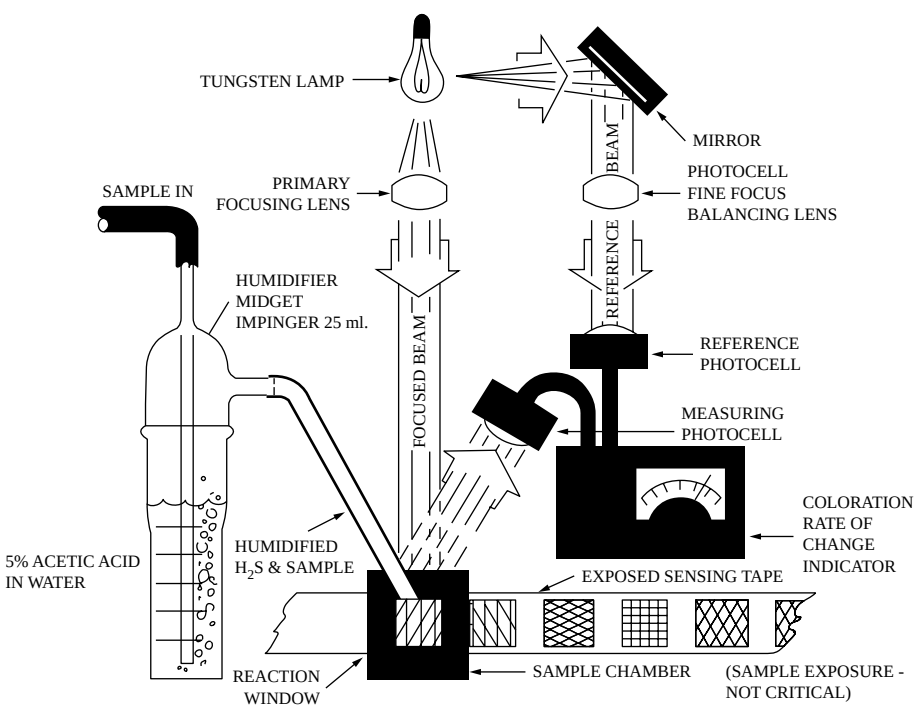

FIG. 8.26d
Rate of change of reflectance-type H_2S readout system. (Courtesy of Houston Atlas Inc.)

© 2003 by Béla Lipták

An optical system, photocells, and first-rate derivative electronic processor provide an output voltage proportional to the rate of change of the photocell output voltage. This output is proportional to concentration of H_2S in the sample. A reference photocell compensates for light intensity changes.

PHOTOMETRIC ANALYSIS

The measurement of the ultraviolet (UV) absorption of H_2S provides a sensitive and selective technique for monitoring H_2S concentrations in gas streams in which no other UV-absorbing compounds are present. Direct photometric analysis and the analysis systems described below for monitoring low levels of H_2S are all operating successfully in gas processing plants and oil refineries.

Direct Photometric Analyzer

Figure 8.26e shows a flow diagram of a direct photometric analyzer system for monitoring low levels of H_2S in interference-free gas streams. (See Section 8.61 for a detailed description of the split-beam UV analyzer.) The system uses a bypass stream to decrease sample lag and a self-cleaning filter to minimize particulate matter in the sample. The sample pressure is maintained within the sample cell with a back-pressure regulator after the sample cell. The analyzer sample cell is purged with air or nitrogen when automatic zeroing is required for high-sensitivity measurements.

Where the level of potentially interfering compounds is relatively low and not rapidly changing, the above system has operated successfully using the sample gas with the H_2S selectively removed as the "zero" reference gas. Potentially interfering compounds are those with conjugated double bonds, such as 1,3-butadiene and aromatics and other sulfur compounds.

Where background absorbance is excessively high and changing rapidly, a special system has been developed for selective H_2S analysis. In this system, H_2S is extracted with a dilute ammonium hydroxide solution, and the strong UV absorption of the ammonium sulfide formed in solution is measured and calibrated for H_2S concentration in the gas stream.

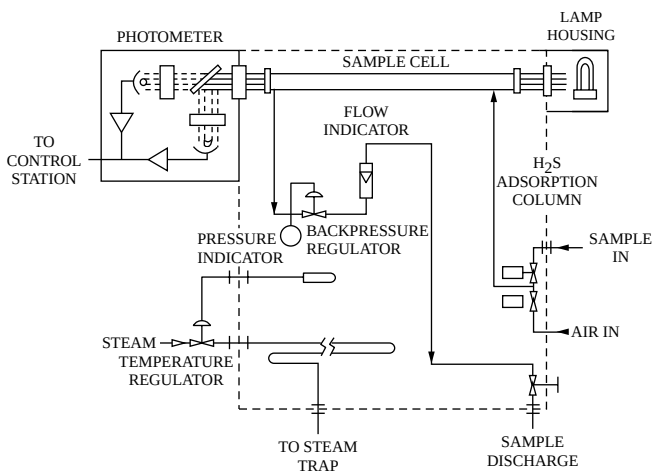

FIG. 8.26e
Direct low-level H_2S photometric analyzer.

GAS CHROMATOGRAPHY WITH FLAME PHOTOMETRIC DETECTOR

Process gas chromatographs have been designed for environmental monitoring of H_2S at the ppm level using the sulfur-specific flame photometric detector (FPD) (Figure 8.26f). See Section 8.12 for the basic principles of chromatography and a more detailed description of the FPD.

TAIL GAS ANALYZER

For Claus sulfur recovery applications, a top of the pipe analyzer is available, which can measure both H_2S and SO_2. An installed unit is shown in Figure 8.26g.

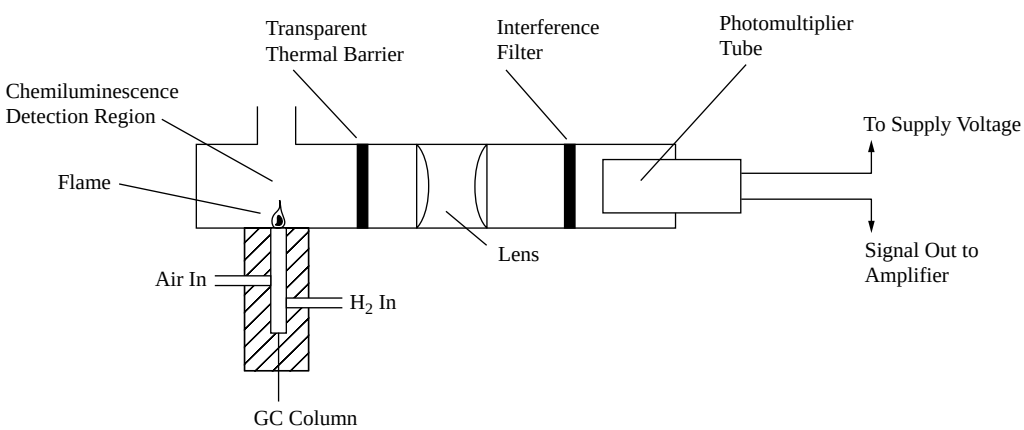

FIG. 8.26f
The flame photometric detector.

© 2003 by Béla Lipták



FIG. 8.26g
Top of the pipe tail gas analyzer detects both H_2S and SO_2. (Courtesy of Ametek Process Instruments.)

Reference

1. Kaminski, C. and Poli, A., "Electrochemical or Solid State H_2S Sensors: Which Is Right for You?" *InTech,* June 1985, pp. 55–61.

Bibliography

ASTM Standard D 4323–84, "Hydrogen Sulfide in the Atmosphere by Rate of Change of Reflectance," American Society for Testing and Materials, Philadelphia, 1984.

Clansky, K. B., *The Chemical Guide to the OSHA Hazard Communication Standard,* Burlinganac, CA: Roytech, 1991.

Clevett, K. J., *Process Analyzer Technology,* New York: John Wiley & Sons, 1986, pp. 288–320.

Corrosion Resistant Alloys, Test Methods for H2S Services, Leeds, UK: Maney Publishers, 1996.

Denny, R. and Sinclair, R., *Visible and Ultraviolet Spectroscopy,* New York: John Wiley & Sons, 1987.

Dundas, M. E., "Infrared Gauges Hydrocarbon Levels," *InTech,* August 1993.

Ewing, G., Ed., *Analytical Instrumentation Handbook,* New York: Marcel Dekker, 1990.

H_2S Corrosion in Oil and Gas Production, National Association of Corrosion Engineers, Houston, TX, 1981.

National Institute of Occupational Safety and Health, *Manual of Analytical Methods,* 3rd ed., Methods 7902 and 7903, 1984.

Occupational Safety and Health Administration, *Analytical Methods Manual,* Method ID110, 1985.

Saltzman, R. S. and Dell, C. G., "Photometric Analyzer Systems for Monitoring Low Levels of Hydrogen Sulfide," *ISA Transaction,* Vol. 24, No. 1, 1985, pp. 69–74.

Skinner, D., *Hydrogen Sulfide in Production Operations,* University of Texas, Austin, 1996.

© 2003 by Béla Lipták

8.27 Infrared and Near-Infrared Analyzers

J. E. BROWN (1969) **A. C. GILBY** (1982)
B. G. LIPTÁK, T. M. CARDIS (1995) **E. H. BAUGHMAN** (2003)

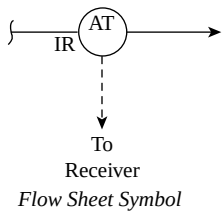

Flow Sheet Symbol

INFRARED ANALYZERS

Process Streams:	Gas or liquid, with surface analysis of solids
Application and Minimum Full-Scale Range:	Maximum range is usually 100%, with path length adjustment; minimum range, assuming 10-m path length. Ammonia—100 ppm; carbon monoxide—25 ppm; carbon dioxide—20 ppm; ethylene—100 ppm; hexane—100 ppm; methane—10 ppm; moisture (humidity)—50 ppm; nitrous oxide—10 ppm; propane—100 ppm; sulfur dioxide—100 ppm (*Notes:* 1. Some of these analytes can be done very well in the UV, for example, sulfur dioxide. 2. The minimum range is also a function of the matrix—the minimum for benzene in air is going to be much lower than that for benzene in gasoline. 3. The normal range is a factor of 10, so ammonia could be 10 to 100 ppm or 1 to 10%, but not 100 ppm to 10%. 4. These are examples only, not an exclusive list.)
Operating Pressure:	Standard from atmospheric to 150 PSIG (10 bars); special up to 1000 PSIG (70 bars)
Ambient Operating Temperature:	–40 to 120°F (–40 to 50°C) is standard; probe temperatures can be higher with special arrangements
Humidity Limitations:	Up to 95% relative humidity (normally the instrument is purged, which negates the effect of humidity in the atmosphere.)
Materials of Construction:	Cell bodies are available in all standard materials; windows can be made of sodium chloride, calcium fluoride, barium fluoride, sapphire, or zinc selenide
Cell Lengths:	For liquids, from 0.004 to 4 in. (0.1 to 100 mm); for gases, up to 130 ft (40 m) enclosed and any length for open-path monitoring
Warm-Up Time:	15 to 20 min. (For most stable operation, allow 16 h for warm-up.)
Repeatability:	±1% of full scale
Linearity:	±0.5 of full scale
Inaccuracy:	±2% of span
Drift:	±1% of full scale for zero and the same for span per day
Costs:	Remember that the installation and upkeep costs are normally much larger than the vendor costs given below. Single-beam portable or laboratory units cost $4000 to $5000; an industrial nondispersive infrared analyzer with diaphragm capacitor costs $8,000; a multigas analyzer pulling in up to five gases from 150-ft (50-m) distances costs $25,000 to $27,000; a microprocessor-based portable spectrometer with preprogrammed multicomponent identification capability for ambient air monitoring and with space for 10 user-defined standards for calibration, AC/DC converter, sample probe, and carrying case costs $20,000; an industrial FTIR costs $75,000 to $125,000.

© 2003 by Béla Lipták

Partial List of Suppliers:

ABB Process Analytics—Bomem (www.abb.com/analytical)
Ametek (www.westernresearch.com)
Anarad (www.anarad.com)
Bruel & Kjaer (kbinfo@spectristech.com)
CEA (ceainstr@aol.com)
Foxboro (www.foxboro.com)
Hamilton Sundstrand (AIT Division—Analect) (AIT@HS.utc.com)
Horbia Instruments (www.horiba.com)
LI-Cor (www.licor.com)
Midac (www.Midac.com)
MKS Instruments (mks@mksinst.com)
MSA Instruments (www.msanet.com)
Ocean Optics (www.oceanoptics.com)
Remspec Corp. (www.remspec.com)
Rosemont (www.rauniloc.com)
Sensidyne (www.sensidyne.com)
Servomex (www.servomex.com)
Siemens (www.sea.siemens.com)
Teledyne (www.teledyne-ai.com)
Wilks Enterprise (www.WilksIR.com)
Zellweger Analytics, Inc, (www.zelana.com)
The best known are ABB, Servomex, and Siemens.

Suppliers of Fiber Optics, Sample Systems, Standards, and Tool Development for Both IR and NIR:

Axiom, samples systems, fibers, both NIR and IR (info@goaxiom.com)
Custom Sensors and Technology, sampling tools and analyzers (mike@customsensors.com)
Dave Mayes, a developer of spectroscopic tools (www.dsquared-dev.com)
Equitech International Corp., fiber switches, fiber connections to the process, sampling systems (www.equitech-intl.com)
Fiber Tech Optica, fiber optics only (www.fibertech-optica.com)
Remspec Corp. Fiber Optics (www.remspec.com)
Solutions Plus, Inc., makers of traceable standards, a division of Ricca Chemical (customerservice@riccachemical.com)

NEAR-INFRARED ANALYZERS

Process Fields:

Gas, liquid, or solid, but mostly liquid and solid

Some Applications:

Octanes of gasoline, 80 to 100
Octanes of components of gasoline, 60 to 120
Benzene in gasoline, 0.2 to 1%
Boiling points of gasoline, 50 to 200°C (122 to 392°F)
Cetane of diesel fuel
Protein content of wheat
Molecular weight of small polymers
Caustic in water 0.1 to 10%
BTU of natural gas (high pressure)
Active ingredient in drugs
p-Xylene concentration in mixture of aromatics

Operating Pressure:

150 PSI standard (10 bar)
1000 PSI special (70 bar)

Ambient Temperature:

–40 to 120°F (–40 to 50°C) is standard. (Note: Since the ambient temperature changes will affect the spectrometer, it will require temperature stabilization.)

Stream Temperature:

This restricts cell material only; normally one keeps the temperature constant.

Humidity Limitations:

None—NIRs, like IRs, should be purged; this eliminates the humidity problem.

Materials of Construction:

Cell bodies in all standard materials; windows can be quartz (most common), sapphire, and others

© 2003 by Béla Lipták

Cell Path Lengths:	For liquids, 0.04 to 4 in. (1 to 100 mm); for gas, long (unless high pressure too long to be practical)
Warm-Up Time:	Manufacturers normally quote minutes—recommend overnight for best stability
Repeatability:	±0.01% of full scale
Linearity:	±0.5% of full scale
Inaccuracy:	±1% of span (depends on how well the "modeling" has been done; can be much better)
Drift:	±0.01% of full scale and the same for span per day
Costs:	$80,000 to $180,000, depending on number of streams, distance between the analyzer and sample, and sample preparation required. (How can these costs be justified by the user? At one installation, the analyzer is determining 25 properties every 45 sec. At another installation, the plant estimated that the analyzer saved $15 million the first year it was in service. At some locations, the instrument is looking at multiple streams; with a 45-sec analysis time, it is possible to look at several streams and still update the control system as often as needed.)
Partial List of Suppliers:	ABB Process Analytics—Bomen (www.abb.com/analytical) Bran and Luebbe (www.branleubbe.com) Brimrose Corporation of America (www.brimrose.com) Foss-NIR Systems (info@foss-nirsystems.com) Guided Wave (www.Guided-Wave.com) Hamilton Sundstrand (AIT Division—Analect) (AIT@hs.utc.com) LTI (www.LTIndustries.com)

In the first part of this section, the infrared (IR) analyzers will be discussed, while the near-infrared (NIR) analyzers will be described in the second part of this section. This is not the only section in this chapter where IR and NIR are discussed. As can be seen from the analyzer selection guide provided in Tables 8.1u and 8.1v, IR and NIR analyzers are applicable to a wide range of analytical tasks.

It should also be noted that the boundaries between ultraviolet (UV), visible, NIR, and IR are slowly disappearing. Analyzers are evolving that are capable of operating in all of these spectrums, as discussed in Section 8.22, and as the mathematical tools to handle full spectral ranges are becoming available. The addition of microprocessors or tabletop computers has enhanced the performance of these instruments by providing such features as self-calibration, self-diagnostics, and chemometric tools, for example, partial least squares (PLS) and principal component regression (PCR), to name two, while design modularity has contributed to simplifying maintenance.

INTRODUCTION

This section starts with the description of some general principles of infrared radiation, covering both IR and NIR. That is followed by the definition of some of the basic terms and design configurations. Then laboratory and industrial on-line designs are separately described, and the increasing overlap between the fields is shown. The first part of this section, which deals with IR analysis, concludes with the description of some newer developments in the field of IR analysis, such as the use of tunable crystals and multiple internal reflection configurations.

For an overall view of where process analysis is going, see "Process Analytical Systems: A Vision for the Future," by Jeff Gunnell and Peter Van Vuuren of ExxonMobil, *Journal of Process Analytical Chemistry*, Vol. 6, No. 1, 2001, pp. 1–5. The International Forum for Process Analytical Chemistry (IFPAC) conference is held annually in January and normally contains sessions on process IR and NIR; for more information, see www.ifpac.com. This conference is run by Infoscience: telephone, 847-548-1800; address, P.O. Box 7100, Grayslake, IL 60030.

PRINCIPLES OF IR AND NIR ANALYSIS

IR absorption (or reflection for solids) is a technique that can be used successfully for continuous chemical analysis of a process. The infrared region of the electromagnetic spectrum is generally considered to cover wavelengths from 0.8 to 20,000 μm. NIR normally covers 0.8 to 2500 μm, and classic IR covers the rest. For IR analysis, these limits are normally put in terms of frequency (cm^{-1}, wave numbers or the number of waves per cm): 4000 to 500 cm^{-1}, which corresponds to wavelengths of 2500 to 20,000 μm.

Except for a small overlap region, sources and detectors that are needed in the NIR will not work in the IR, and vice versa.

© 2003 by Béla Lipták

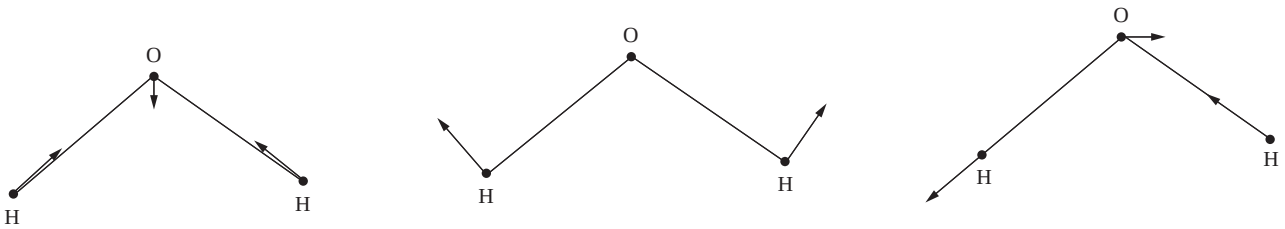

FIG. 8.27a

The three fundamental vibrations of the water molecule: symmetric stretch, bend, and antisymmetric stretch; the amplitudes of the vibrations have been exaggerated for clarity.

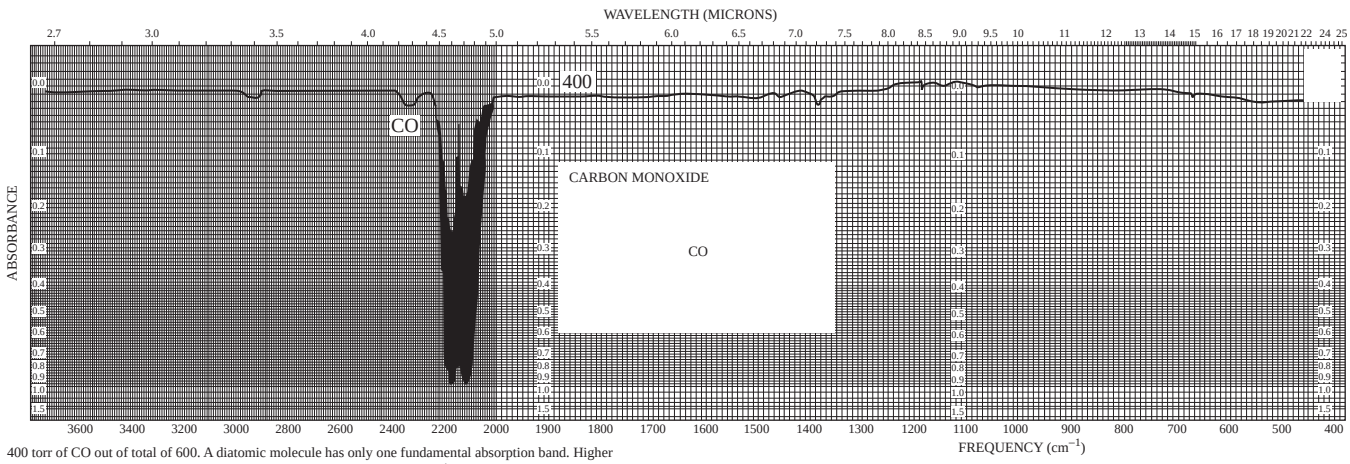

400 torr of CO out of total of 600. A diatomic molecule has only one fundamental absorption band. Higher resolution shows the band to consist of many sharp lines spaced about 4 cm^{-1} apart (rotational line structure).

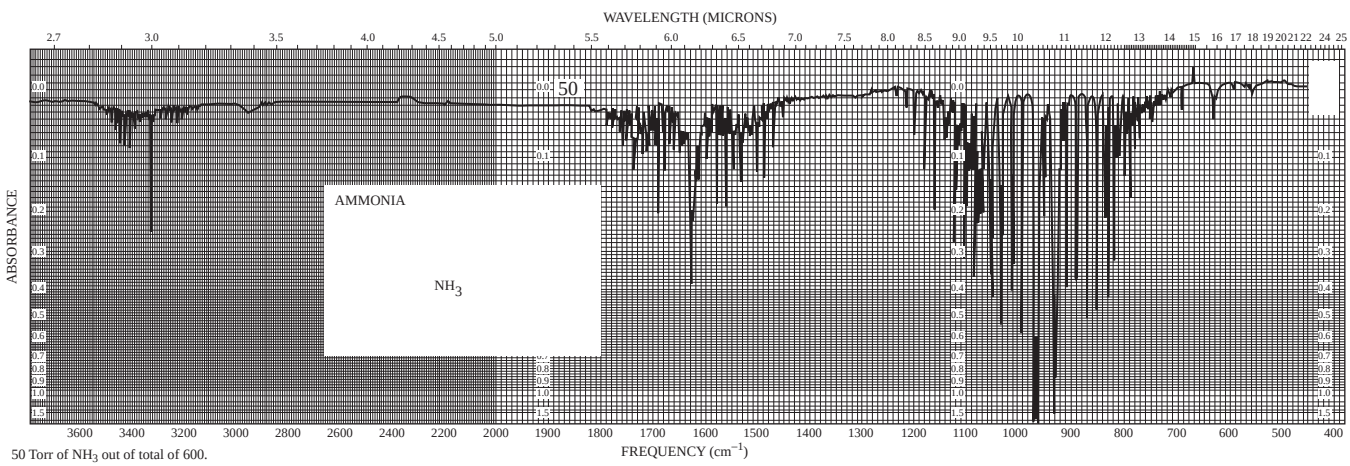

50 Torr of NH_3 out of total of 600.

FIG. 8.27b

Examples of IR spectra recorded using a laboratory double-beam spectrometer. All spectra are gas phase using a 2-in. (5-cm) cell with N_2 added to give a total pressure of 600 mmHg (torr). (Courtesy of Dow Chemical Co.)

Some laboratory spectrometers have both sources and detectors so they can work in both areas. For the process, most gas analysis is done in the IR and most solid and liquid analysis is done in the NIR. The choice is based on workable path lengths.

Infrared radiation interacts with almost all molecules (except the homonuclear diatomics oxygen, O_2; nitrogen, N_2; hydrogen, H_2; chlorine, Cl_2; etc., and monatomics such as helium, He; neon, Ne; etc.) by exciting molecular vibrations and rotations that affect the dipole of the molecule (Figure 8.27a). The oscillating electric field of the IR wave interacts with the electric dipole of the molecule, and when the IR frequency matches the natural frequency of the molecule, some of the IR power is absorbed.

The pattern of wavelengths, or frequencies, absorbed identifies the molecule in the sample. The strength of absorption at particular frequencies is a measure of the concentration of the species. Analytical laboratory IR is

© 2003 by Béla Lipták

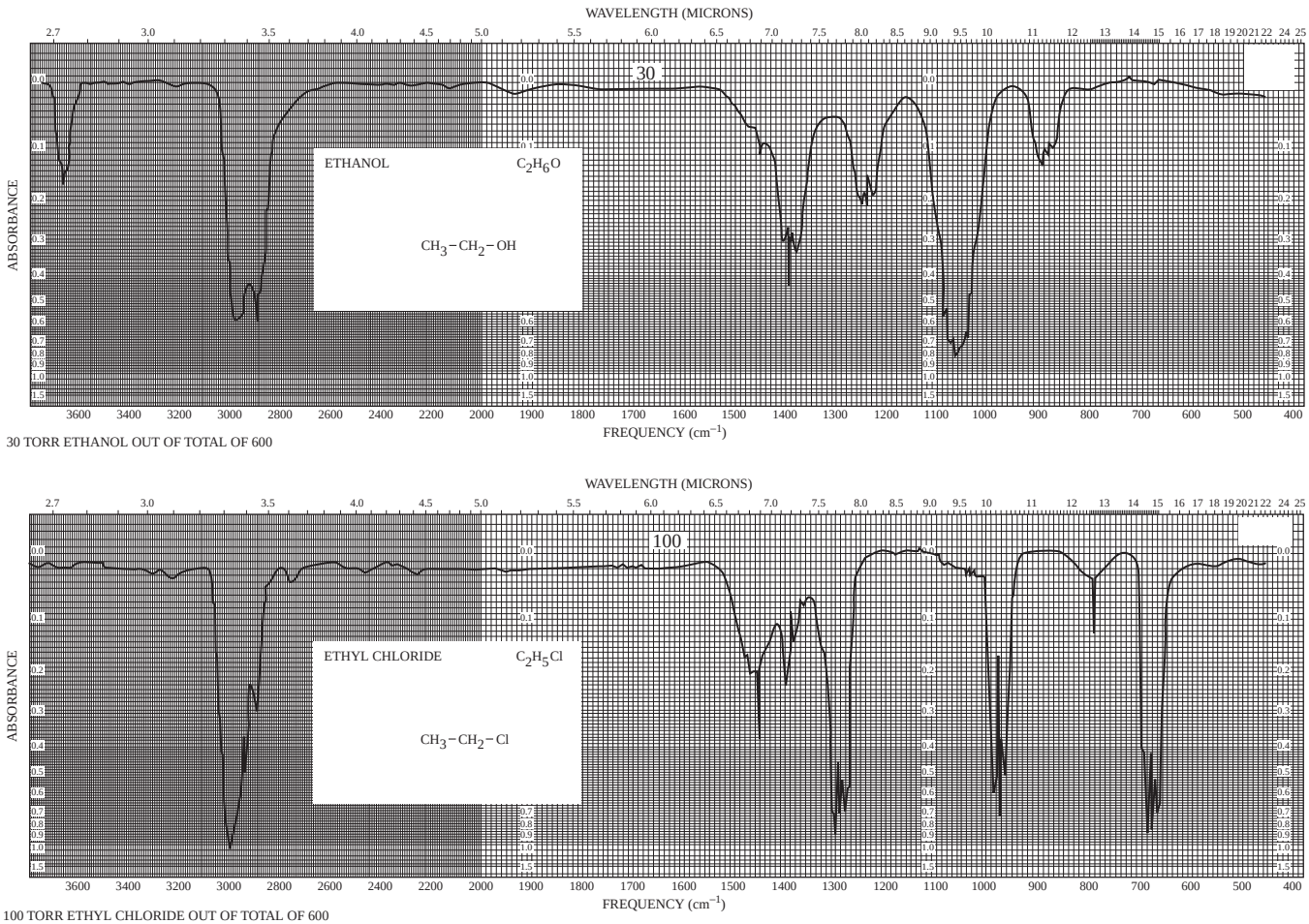

FIG. 8.27b Continued

largely concerned with identification, or qualitative analysis, while process IR is concerned with quantitative analysis. Some typical spectra are shown in Figure 8.27b. The NIR consists of overtones and combinations of these IR bands.

Particular groups of atoms tend to absorb at the same frequency with very little influence from the rest of the molecule. These group frequencies are a great help in identifying the molecules from the IR spectra (Figure 8.27c). On the other hand, similar molecules, such as a series of homologous hydrocarbons, have very similar IR spectra.

Infrared analysis is, therefore, most straightforward when the component molecules of the sample have significantly different atomic groupings. A mixture of aliphatic hydrocarbons would be better analyzed by another technique, such as gas chromatography. The part of the spectrum offering the best discrimination between molecules is between 7 and 15 μm, 1430 and 670 cm^{-1}, the so-called fingerprint region. Given the very large signal-to-noise ratio in the NIR, one can make very fine separations between similar species; for example, o-xylene can be measured in a mixture of xylenes, ethylbenzene, and benzene.

Beer–Lambert Law

The starting point for quantitative analysis is the Beer–Lambert law, frequently just called Beer's law, which relates the amount of light absorbed to the sample's concentration and path length.

$$A = abc = \log_{10} I_0/I \qquad \textbf{8.27(1)}$$

where

A = absorbance
I = IR power-reaching detector with sample in the beam path
I_0 = IR power-reaching detector with no sample in the beam path
a = absorption coefficient of pure component of interest at analytical wavelength; the units depend on those chosen for b and c; a newer term, ε, extinction coefficient, is the preferred term in the academic literature
b = sample path length, sometimes l is used
c = concentration of sample component

© 2003 by Béla Lipták

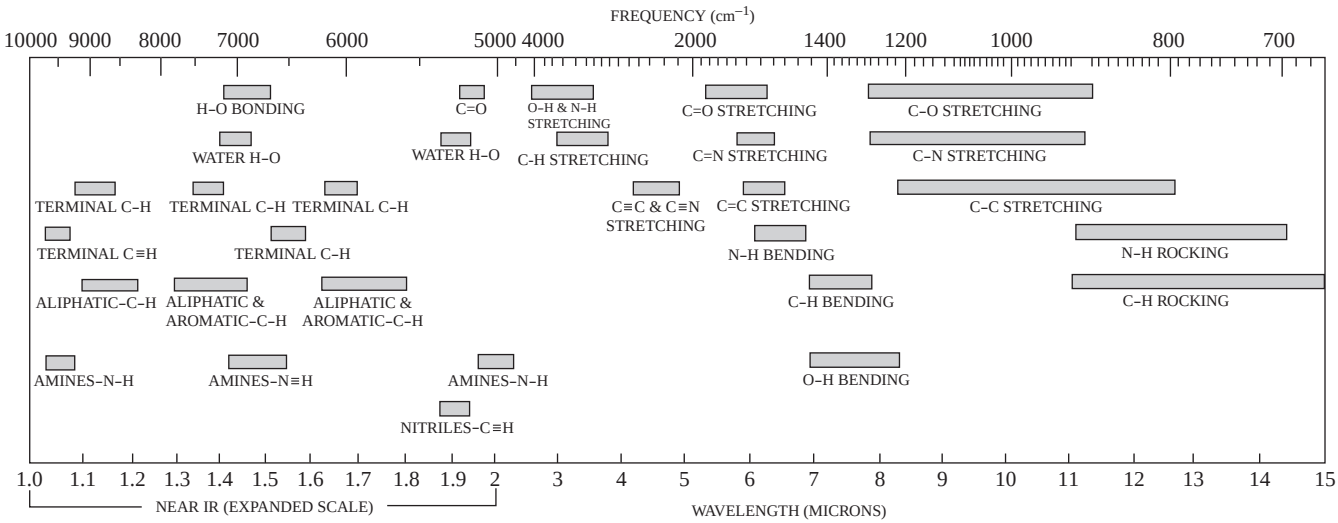

FIG. 8.27c

Functional group frequency chart. Fundamental vibrations absorb in the mid-IR; overtones and combination bond are 10 to 10,000 weaker and absorb in the NIR.

The law states that concentration is directly proportional to absorbance at a given wavelength and path length at specified temperature and pressure. Note, however, the logarithm function—frequently absorbances over 1 show nonlinear behavior, and sometimes problems start as low as 0.7.

Sometimes isolated peaks in the IR can be found that correspond only to the item of interest; then calibration plots of A vs. c can be made up using known samples and used to analyze unknown ones (Figure 8.27d). Beer's law is also helpful in choosing the optimum path length for accurate analysis. (In some cases, this linear relationship is not observed. See the discussion of linearity later on in this section.)

There is also the case where overlapping spectral lines eliminates the simple application of Beer's law. Note: Not only can concentration of molecular species be identified, but also physical properties can frequently be measured. This is done more in the NIR than the IR, but can be done in both. A statistical approached called chemometrics, PLS and PCR, for example, is used to measure physical properties and solve the overlapping spectral lines problem referred to above. These very powerful programs require care in use and are more frequently used in NIR than IR.

Definitions of Terms and Configurations

Some of the laboratory spectrophotometers are of the dispersive design, meaning that a prism or grating is used to separate the spectral components in the IR radiation of the source.

Most modern laboratory units are of the Fourier transform (FT) type, where a moving mirror generating an interference pattern of the wavelengths accomplishes dispersion, and then the FT converts this detected signal into something useful. See the section on Fourier transform spectrometers. Most industrial process analyzers are nondispersive infrared (NDIR) designs. However, there are some very

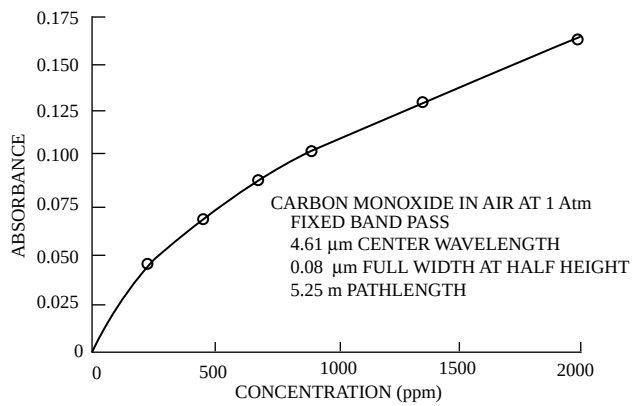

FIG. 8.27d

Calibration curves for a typical filter analyzer. Top: Carbon monoxide shows a large departure from the Beer–Lambert law. Bottom: 2-Pentenone gives a linear calibration plot.

© 2003 by Béla Lipták

good FTIRs on the market for process applications where several components need to be measured. Since oxygen and nitrogen do not absorb in the IR spectrum, dry air is frequently used as a zero reference gas; however, one needs to be aware of the very strong absorbance of CO_2 when one is doing this.

Detectors are mostly solid-state type, with some microphone types still in existence. The solid-state type, the most common today, functions by converting the incoming photons to an electric current. This current is amplified and then sent to the recording device. The microphone-type detectors are filled with an IR-absorbing gas, which is heated by the radiation it receives and expands as a consequence. It is this expansion that is measured. The microphone type usually lacks uniform sensitivity across the spectrum. The solid-state detectors are generally of lower sensitivity than the microphone type at the microphone type's peak sensitivity, but they have almost uniform sensitivity across the spectrum.

IR Instrument Designs

Single-Beam Configuration Designs of IR instruments can be separated into single- and dual-beam configurations. Single-beam analyzers are the main ones used in the process world (Figure 8.27e). They function by alternating filters in the beam path—the reference chosen to not absorb the species of interest, but to offset any other species that would absorb at the measuring wavelength.

(The proper choice of the reference wavelength is not a trivial task. The reference wavelength should be as close to the measuring wavelength as possible, and yet let the measurement be made. Drifts in the source or detector will be compensated best if the measuring and reference wavelengths are close together.)

These filters are put on a chopper wheel in the light beam, and as the chopper alternatively spins one filter or the other into the optical path, the difference or ratio in the energies received at the detector will be a function of the concentration of the component of interest. Because filters normally change absorbance at a given wavelength with temperature, this approach must be temperature stabilized. Also note that dirt on the window will not affect the reading because it should affect both the measuring and reference wavelength the same so the ratio stays constant if the monitoring and reference wavelengths are close enough.

A less expensive design uses just the measuring wavelength, from above, eliminating the filter wheel and reference filter. Problem: If the source varies in intensity or temperature, so will your measurement. If the detector changes in sensitivity, so will your result. In other words, to save the first costs, one needs to rezero and respan these instruments very frequently.

If no lenses or mirrors are used to direct the IR radiation from the source to the receiver, it is necessary to polish the interior walls of the sample cell to make them highly reflective. Sometimes gold foil is used to achieve this goal. The use of reflective walls can be very expensive because it can contribute to drift as contamination of the wall changes reflectivity.

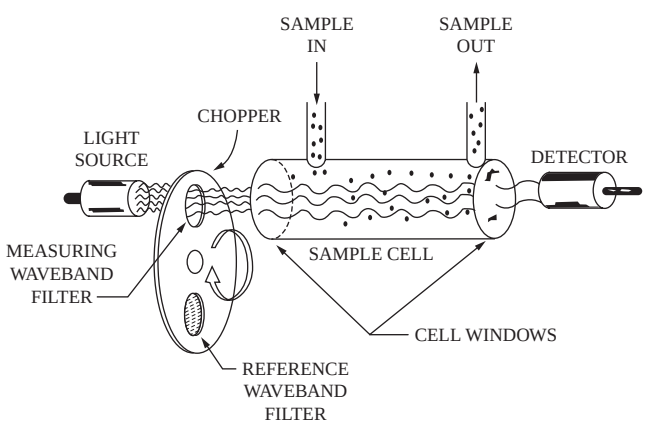

FIG. 8.27e
Single-beam IR analyzer provided with two filters, one for the sample measurement and the other for reference.

Dual-Beam Configuration In the dual-beam configuration, the IR radiation is allowed by the chopper to pass alternately through the sample or the reference tube (Figure 8.27f). The reference tube can provide a true zero when it is filled with a nonabsorbing gas, or it can act to balance out the gases which are not of interest, if filled with those gases. A narrow-band-pass optical filter is placed in front of the detector to limit the IR energy it receives to the wavelength that is characteristic of the component of interest. (Note: This severely limits the amount of energy getting to the detector; the narrower the band pass, the less energy, and the narrower the band pass, the more specific.)

If the sample contains the component of interest, this will attenuate the magnitude of the detected signal in the absorption band of the band-pass filter (Figure 8.27g). The use of the reference cell in the dual-beam configuration reduces the drift caused by power supply, detector changes, or some temperature fluctuations. The use of collimating optics

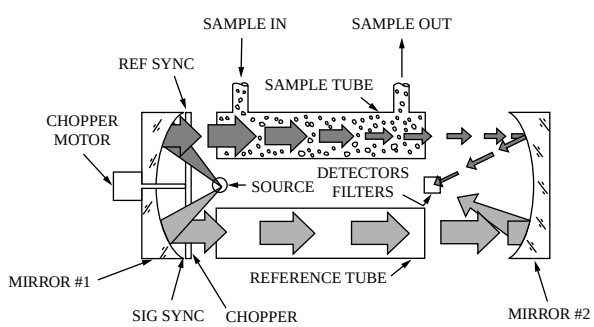

FIG. 8.27f
Dual-beam IR analyzer where the radiation alternatively passes through the sample tube, which contains the component of interest, or the zero-reference tube, which is free of absorbing gas.

© 2003 by Béla Lipták

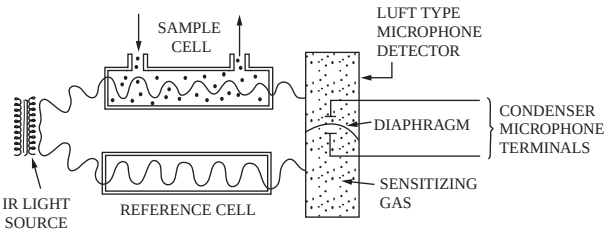

FIG. 8.27g
Dual-beam analyzer with internally reflective cell surfaces and Luft-type microphone detector.

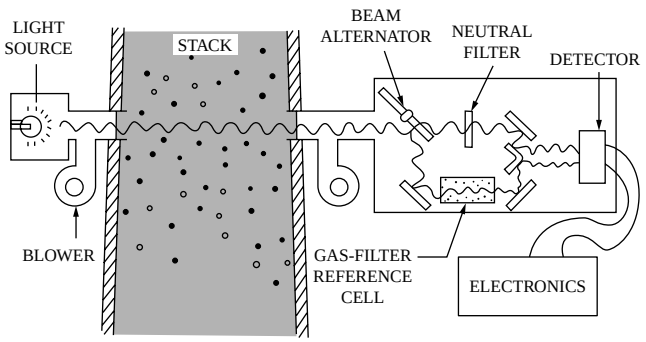

FIG. 8.27h
Dual-beam IR analyzer for stack gas monitoring.[1]

also eliminates the need for internal reflection from the interior surfaces of the tubes, thus simplifying their construction and eliminating the associated drift due to dirt accumulating on the wall of the tubes.

Dual-Beam Design for Stacks

When the IR analyzer is used for *in situ* stack gas analysis, two different approaches can be used: 1) the detectors and source on the same side of the stack, and 2) the detectors and source on opposite sides of the stack. For installation purposes, the first is much easier, but it requires an internal filter to remove any solids from the stream.

In the second system, shown in Figure 8.27h, both the reference and measuring wavelength are affected the same by scattering bodies in the stream; therefore, there is no need for a filter. This system is frequently used in pollution alarm situations. The reference cell is filled with somewhat less than the allowed emission of the gas of interest, and the IR beam leaving the stack is alternated between a neutral filter and the reference cell. When the stack gases are below the level of concern, the reference cell will remove the absorption lines that are characteristic of the gas of interest. Therefore, the total IR energy from the reference cell is at a reduced value. The analyzer is balanced by selecting a neutral filter, which reduces the energy from all the wavelengths to such an extent that the energy levels received by the detector from the neutral and reference gas filters will be the same.

When the pollutant of interest is present in the stack, the energy content of the reference path is unaffected (because the absorption is already complete at the selected wavelength). On the other hand, the IR energy reaching the detector through the neutral filter is reduced (due to the absorption of the pollutant gas) and the ratio between the beams reflects the pollutant concentration at the level of concern in the stack. This measurement is unaffected by particulate concentration variations, within reason, as it affects both paths equally and their ratio is unaffected.

The first configuration is shown in Figure 8.27i. Note that only one opening is required in the stack, with no critical alignment across the stack required, as in the other option. It is very critical to keep the reflector mirror clean; some people use a ceramic filter for that purpose. This is the only type that this author has used, and it has worked well.

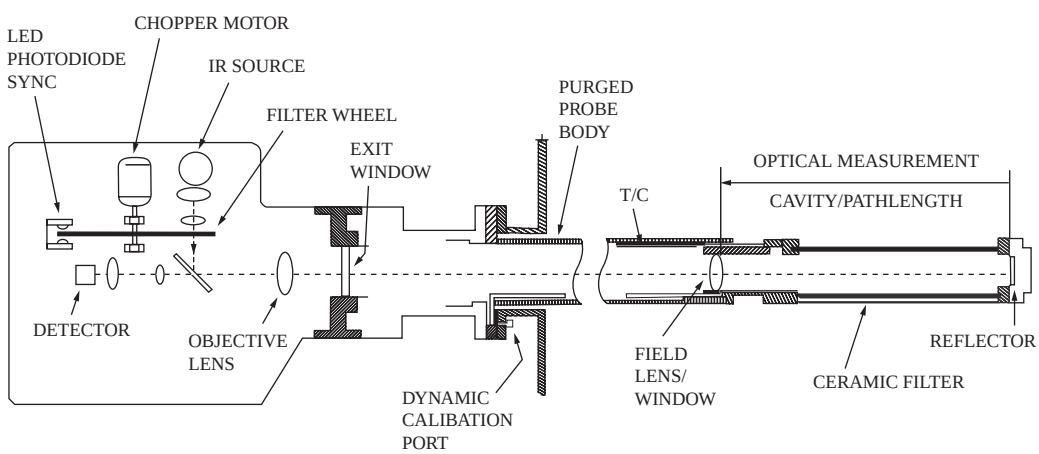

FIG. 8.27i
IR analyzer used for in situ *stack gas analysis equipped with ceramic diffusion cell, reflector, and calibration port.*

© 2003 by Béla Lipták

INFRARED ANALYZERS FOR THE LABORATORY

Grating Spectrophotometers

The standard laboratory IR instrument was a double-beam, optical null spectrophotometer. Diffraction gratings have completely replaced prisms for separating the IR beam into its component wavelengths. Both approaches have been replaced by FTIR, discussed below. Most IRs, old and modern, use a heated *black-body* source that emits at all IR wavelengths, and the thermal detector responds roughly equally at all wavelengths (Figure 8.27j).

The complete spectrum is scanned by rotating the grating and measuring the light intensity passing through its exit slit. Sample cells are placed in the sample beam and, as the spectrum is scanned, the instrument drives an attenuator into the reference beam until the detector sees equal energy from both beams. These spectrophotometers are ideally suited for qualitative analysis.

There are computer libraries of spectra and search programs that allow the computer to find the major compound in the sample and sometimes some of the minor ones. In many cases, manufacturers have added computer data handling to make possible both qualitative and quantitative analyses.

Filter Spectrometers

A circular variable filter (CVF) selects the wavelength to be measured. Microcomputer-controlled, single-beam analyzers working from 4000 to 690 cm^{-1} have been designed for the quantitative analysis of mixtures. Measurements are made at each analytical wavelength in sequence, and the output is presented as a list of concentrations for mixtures of up to 10 components.

Narrow-IR-band-pass filters consist of multiple layers of dielectrics of alternating refractive index on a transparent substrate. They pass a band of wavelengths while rejecting all others. The width of the band pass is typically 1 to a few percent of the center wavelength of the item of interest. Spectral resolution is low when compared to that obtained with a grating instrument, but signal-to-noise ratios are higher. A CVF is made of dielectric layers of continuously varying thickness so that the wavelength selected depends on the angular position of the CVF wheel.

Fourier Transform Spectrometers

A quite different and very high performance approach to analysis makes use of the Michelson interferometer or some modification thereof. Instead of separating the different wavelengths of light with a filter or a grating for measurement, the compete spectrum is encoded as an interferogram in a few seconds of measurement time, and the spectrum is computed by Fourier transform or fast Fourier transform.

Advantages include speed, full-spectrum method, and light throughput (one is not throwing away most of the light as one is looking at a different wavelength). The disadvantage is the moving parts. There has been a major effort to stabilize the moving parts, but they still require smooth movement for good spectra; there must be an attached computer to do the transform, but this can act as a storage device for some of the spectra.

A schematic of a typical FTIR or FTNIR spectrophotometer is shown in Figure 8.27k. Collimated light from the source is directed through the beam splitter. Approximately 50% of the light passes through the beam splitter to the fixed mirror, M1. The balance of the light is reflected to the moving mirror, M2. When these two beams are reflected off the mirror surfaces, they recombine at the beam splitter to give constructive and destructive interference as a function of the wavelength of light and the distance that M2 has moved.

The included helium–neon laser detection system in the FT analyzer monitors the position and velocity of the moving mirror. This results in excellent wavelength accuracy for the FT analyzers. The displacement of the moving mirror induces phase differences that result in an interferogram. In order to produce a spectrum of absorbance vs. wavelength, the interferogram must be transformed digitally from a plot of detector

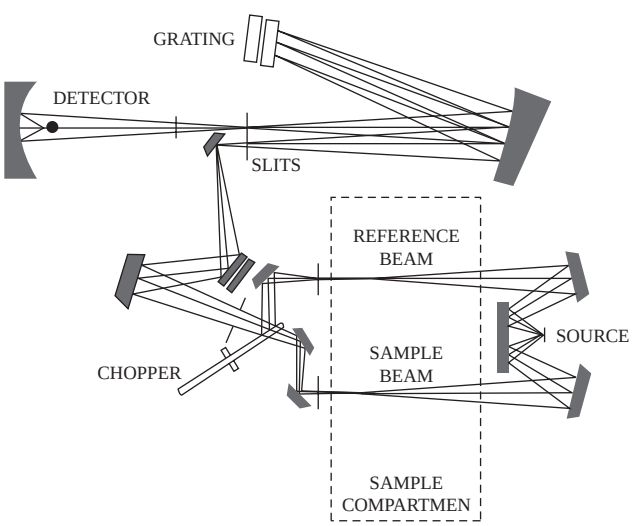

FIG. 8.27j
A widely used laboratory double-beam optical null spectrophotometer.

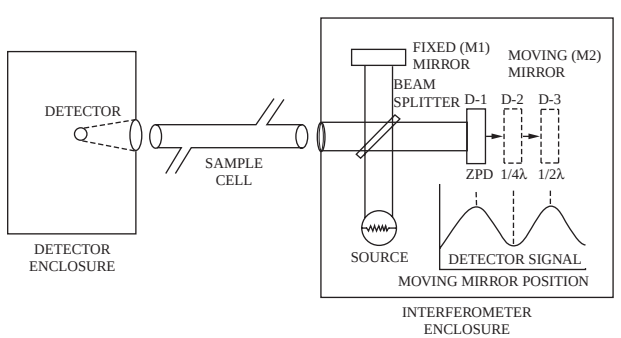

FIG. 8.27k
FTIR spectrophotometer.

© 2003 by Béla Lipták

response vs. optical path difference. This calculation of the spectrum is carried out using Fourier transform or fast Fourier transform on the attached computer.

Since the FTIR or FTNIR analyzer measures all the wavelengths simultaneously on one detector, the entire spectrum can be used for quantitative analysis. FT spectrophotometers are used for multicomponent applications where the high optical resolution allows separation of interfering components. (Note: One should be careful with the term *optical resolution*. Some suppliers will talk about resolution as the number of data points per unit of the spectrum. This, in most cases, is not the same as their optical resolution. Without high optical resolution, you cannot separate some components, regardless of the data point resolution.)

FTIR and FTNIR spectrophotometers are being used online where the full spectrum is needed for analysis. One big advantage of the full-spectrum measurement is that the associated computer programs can be set up to detect unusual samples or impurities in the sample. These unusual samples are frequently referred to as outliers, but they are sometimes an early warning of an unwanted change in raw materials or in the process.

Tunable Lasers

On the face of it, this is the spectroscopist's dream come true. Laser diodes are available to cover the 4000 to 400 cm^{-1} region. A given diode may cover 200 cm^{-1} with small discontinuities about every cm^{-1} in its tuning. The devices (PbSSe or PbSnTe) have very high spectral resolution and good power output, but require liquid N_2 temperature or below, plus other complex support equipment. They are for the research spectroscopist, but they have been used in isolated cases of process analysis that could not be done by more standard methods.

Laboratory Instruments in Process Measurement

Normally, laboratory instruments cannot be taken from the laboratory and put onto the process line because the laboratory instrument does not meet the fire code for the process area and it is not stable enough to run 7 days a week, 24 h a day without the need for recalibration. Some companies, such as Dow Chemical, have done a good job in moving many laboratory instruments into the process arena, but with a high investment of manpower.

The Fourier transform spectrophotometer has successfully made the move from laboratory instrument to an online tool, as have diode array instruments. In many cases, however, the process instrument no longer looks like its laboratory cousin, and the cost is considerably higher by the time it is temperature stabilized and made explosion-proof. (Process instruments should not need a safe, air-conditioned building to survive in the process world, but this can aid its stability and will certainly aid in its maintenance.)

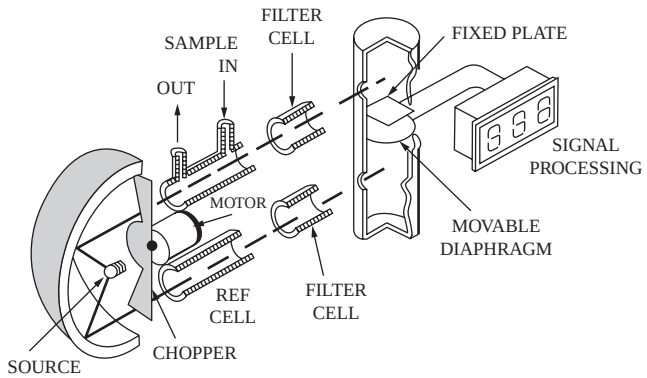

FIG. 8.27l
Typical NDIR analyzer using positive filtering. Both chambers of the detector are filled with a sample of the gas to be analyzed.

INFRARED ANALYZERS FOR PROCESS APPLICATIONS

Single-Component Analyzers

This is a type of process IR analyzer that has no analog in laboratory instruments. It is a NDIR analyzer and is used almost exclusively for gas analysis. These analyzers were invariably double-beam and used gas-selective Luft detectors filled with the gas to be analyzed (Figures 8.27g and 8.27l). (They currently use a solid-state detector.) In the usual positive filtering mode, light from single or dual sources is chopped and passed in phase through the sample or reference cells to the detector. Sample molecules attenuate certain wavelengths, and the difference in power between sample and reference beams is sensed as a change in capacitance. This is amplified and displayed to give an output corresponding to concentration.

Selectivity is improved by adding a narrow-band-pass filter, which selects the wavelengths of interest, and filter cells filled with interfering species, which remove undesirable wavelengths from both beams. The NDIR technique is most sensitive and selective for small molecules whose spectral fine structure is resolved under ambient conditions. The spectral resolution of these instruments is effectively set by the width of the absorptions line and, in many applications, is much better than the typical laboratory grating spectrophotometer.

The Luft detector has excellent sensitivity, but it must be temperature controlled and protected from external vibration. These analyzers need routine calibration for span and zero. (This is true for most process analyzers.)

Design Variations Some important variants of this basic NDIR method with Luft detectors should be mentioned:

1. A second detector placed behind the first can be sensitized to measure and compensate for an interferant.
2. Detector chambers can be placed one behind the other with the chopper alternately delivering each beam

© 2003 by Béla Lipták

to both. A different pressure of sensitizing gas in each detector chamber provides a built-in reference wavelength.

3. The combined beams, alternately admitted to the same chamber of the detector, cause heating and gas flow in and out of the chamber. A sensitive flow meter gives an output proportional to the sample concentration.
4. In a technique called cross-flow modulation, the mechanical chopper is replaced by a valve that exchanges sample and reference gas between the two beams at a frequency of about 1 Hz. High sensitivity and zero stability are claimed for this technique, but reference gas must be supplied continuously, flow rates and temperatures must be carefully regulated, and response time is slow.

The solid-state detectors do not require the utilities that the Luft detector requires and are fast enough for the filter instruments. (Many of them do not keep up with a scanning grating, however.) For stability and reproducibility, it is hard to beat the filter instrument with a solid-state detector.

Gas Filter Correlation Spectrometers

Gas filter correlation (GFC) spectrometers (Figure 8.27m) use a nonspecific thermal detector with a specifying reference gas cell. This is an example of negative filtering. The technique is most useful when high specificity is required and it is not practical to have a reference beam. The IR beam passes alternately through a cell containing a fixed quantity of the gas to be analyzed and through a similar cell filled with a zero gas, such as N_2. The combined beam passes through the sample, for example, across a smoke stack, and on to a thermal detector.

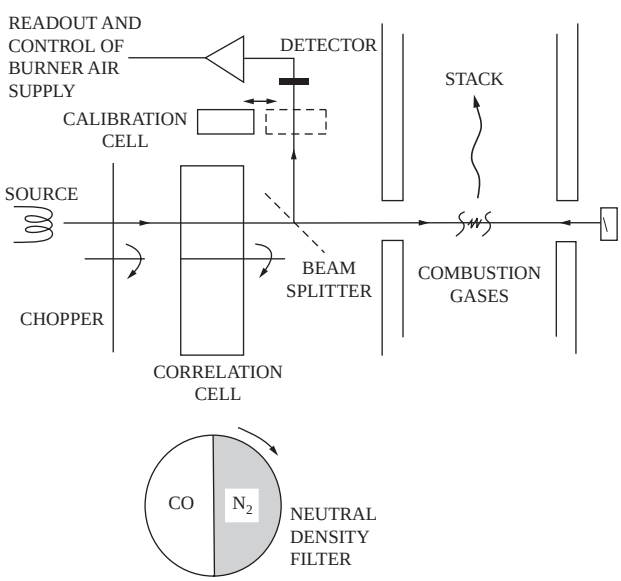

FIG. 8.27m
The gas filter correlation technique is an example of negative-filtering NDIR. The diagram shows how changes can be sensed in stack CO in the 0- to 1000-ppm range and used for burner control.

This system, which is similar to NDIR, works well for analyzing small gas phase molecules whose spectra have well resolved, rotational fine structure in the presence of strong interference from other species. One example is the analysis of carbon monoxide, CO, at the 100-ppm level in combustion gas-containing large concentrations of carbon dioxide, CO_2, and water, H_2O.

For accurate data, the sample must be removed from the optical path periodically to check for zero drift. A sealed calibration cell can be used to check span. (Note: Both of these require installation considerations.) Another configuration of the stack gas analyzer GFC has already been shown in Figure 8.27h.

It is possible to extend the GFC method to several gases with nonoverlapping spectra by placing a gas mixture in the correlation cell and inserting different narrow-band-pass filters sequentially into the beam.

Filter Analyzers

Narrow-band-pass filters are used with nonspecific thermal detectors and are the most common IR units available today. Various configurations exist:

1. Single-beam, dual-wavelength (analytical and reference) (Figures 8.27e and 8.27n)
2. Single-beam, multiwavelength (one reference and up to 10 measurings), same basic construction as shown in Figure 8.27n
3. Dual-beam, single-wavelength
4. Dual-beam, dual-wavelength

The intent of the dual-beam design is to compensate for source output changes or detector or electronic gain changes.

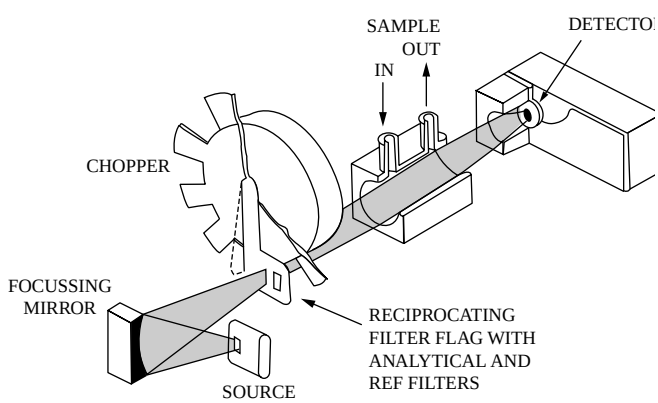

FIG. 8.27n
Optical schematic of a single-beam, dual-wavelength filter analyzer. In an alternate arrangement, larger filters can be mounted directly on the rotating chopper wheel. The principle has been extended to multiple wavelengths. If a microcomputer-controlled circular variable filter wheel replaces the reciprocating filter flag, the optical schematic becomes that of a programmable multicomponent analyzer.

© 2003 by Béla Lipták

It cannot account for changes in sample cell transmission, such as dirt accumulation on windows or scattering particles in the sample stream.

The dual-wavelength design aims to use a reference wavelength not absorbed by the sample but affected by the above-mentioned sources of error to the same extent as the analytical wavelength. (Therefore, the reference wavelength should be as close to the analytical wavelength as possible.) The single-beam design is optically and mechanically simpler and lends itself easily to interfacing with a wide variety of sample cells.

Multiple-Component Fixed Filter Analyzer

When the components to be analyzed have absorption bands that do not overlap in the spectrum, the single-component analyzers can simply be expanded to measure multiple wavelengths. (Note: Having absorption bands that do not overlap does not imply that the absorption peaks are free from interference—only that some part of the band is free from other species.)

There are NDIR analyzers that use two detectors filled with two different gases, such as carbon monoxide and a hydrocarbon. The IR passes through first one detector and then the other. Filter analyzers are more easily expandable to multiple wavelengths, enabling a wide variety of process and quality control analyses to be made. Filters can be mounted on a rotating wheel or inserted sequentially into the beam by a cam mechanism. ABB can analyze up to 10 different gasses with their multiwave units.

These instruments typically use analog signal processing. It is possible, but awkward, to compensate for spectral interference by cross-coupling between the different wavelength outputs. Digital signal processing simplifies this problem, but it is not widely used in multiple-wavelength fixed-filter analyzers. Note: Digital processing is very common with full-spectrum techniques.

Programmed Circular Variable Filter Analyzer

These microcomputer-controlled analyzers, derived directly from the CVF laboratory analyzers mentioned above, are simple and rugged in optical design. The same basic analyzer can be programmed for any number of analyses up to a maximum of about 10 components. The programmable CVF offers a major advantage over using fixed filters.

It avoids the whole problem of filter selection and filter wavelength manufacturing tolerances and the prohibitive costs of obtaining fixed filters for one-of-a-kind analyses.

The built-in microcomputer makes interference compensation relatively straightforward. Instrument calibration coefficients and analytical wavelengths are obtained using known mixtures of the components of interest and placed in read-only memory (ROM).

The microcomputer enables self-diagnostic and self-checking features to give early warning to trouble and simplify the analyzer service.

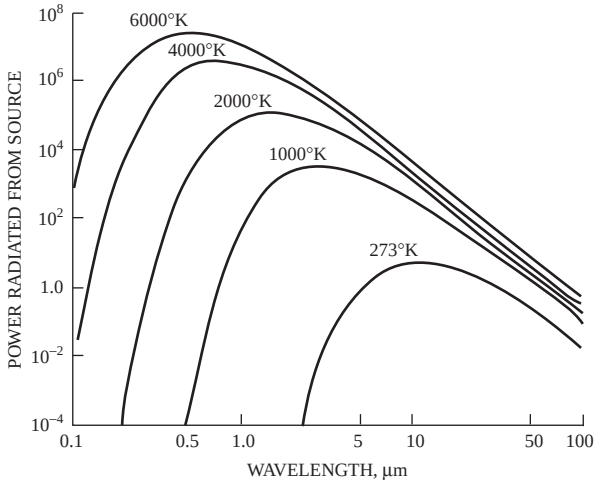

FIG. 8.27o

Radiated power in w./m^2/str/μm from an ideal black body as a function of wavelength and temperature. Practical sources will have lower output for a given temperature to the extent that their emissivity is less than unity. The sun's radiation is close to a black body at 6000°K (5727°C) with peak output in the visible. A Nichrome wire source typically runs a little of 1000°K (727°C) with a peak output near 2.5 μm. Increasing the temperature increases output much more in the NIR than at longer wavelengths.

This technology is most developed for workroom air quality monitoring.

Infrared Sources

With the exception of the tunable diode laser, all the sources used in IR analyzers are of the black-body type (Figure 8.27o). An element is heated to as high a temperature as is consistent with long operating life. The radiation varies as a function of wavelength as the source temperature increases.

Sources used in process analyzers in the mid-IR depend on ohmic heating of an element, such as Nichrome wire, either exposed or embedded in a ceramic matrix. The metal oxide surface layer or ceramic have good emissivity in the mid-IR. The normal source temperature is in the 2000°C range. In NIR, the much hotter tungsten halogen lamp with a quartz envelope is an excellent source. (Remember, the shorter the wavelength, the higher the energy; therefore, the hotter source is required in NIR.) At wavelengths longer than 4 μm, the output drops due to envelope absorption, but even if it did not, the emissivity of tungsten decreases at longer wavelengths. (See the section on NIR for more comments on this source.)

Infrared Detectors

In all cases, IR energy is modulated so that an AC signal is detected and synchronous demodulation can be used to narrow the noise bandwidth. Beam chopping or modulation is best done after the sample. This avoids errors due to the detector sensing emission from hot samples. The error effect can be large, particularly at the longer wavelengths, beyond 5 μm.

© 2003 by Béla Lipták

NDIR Detectors These are the gas-filled capacitive microphones already described (Figures 8.27g and 8.27h). They use low-modulation frequencies, 19 Hz or below, and are affected by external noise and vibration. They operate in the IR and are very sensitive. One can also use solid-state devices in this application.

Thermal Detectors These are used in the mid-IR by filter analyzers. The pyroelectric detector is usually a wafer of $LiTaO_3$ about 20 μm thick, electroded on each side. It behaves electrically like a capacitor, and a current flows out of it if the temperature changes. It must be used in a chopped beam of IR, most commonly near 50 Hz. The minimum detectable signal is about 10^{-9} w. in a 1-Hz bandwidth, and it is somewhat less sensitive than a typical NDIR detector. Pyroelectric detectors must be mounted and sealed to avoid microphonic and acoustic interference (Figure 8.27p).

The sensitivity of the evaporated thermopile is best at lower-chopping frequencies, below 10 Hz. It is very rugged and less microphonic than the pyroelectric detector, but also less sensitive.

Photoconductive Detectors In NIR, photon detectors such as PbS or PbSe can be used. They are two or three orders of magnitude more sensitive than the thermal detectors and operate best at higher chopping frequencies. The PbSe sensitivity extends almost to 5 μm, if thermoelectrically cooled, and can be used for such common analyses as $CH/CO/CO_2$. Response is strongly temperature dependent, in contrast with the above-mentioned thermal devices.

Selecting the Cell

Path Length Selection There is an optimum cell path length for analyzing a particular sample. Too short a path length means a low sample absorbance, which gives a weak signal in comparison to instrument noise. Too long a path length results in very little energy reaching the detector and Beer's law often fails. Simple theory, based on the detector/preamplifier as the chief source of noise,[3] unaffected by the IR power reaching the detector, predicts that most accurate concentration measurements can be made when the sample transmits 1/e of the incident beam (e = 2.73).

This corresponds to a transmittance (T) of 36%, or an absorbance (A) of 0.43 A. However, any absorbance between 0.1 and 1.0 A, 80 to 10% T, will normally give good results. Measurements at higher absorbance tend to minimize the effect of certain kinds of electronic drift, while at lower absorbances, they minimize nonlinear ties in the analyzer's response (see "Calibration: Sources of Analyzer Drift," below).

Therefore, the cell path length should be chosen to put the sample absorbance in this desirable range. When analyzing trace gases, the absorbance is often near the lowest detection limit of the analyzer, even when the longest available path length is used, and that is the best that can be done.

Gas Cells Figure 8.27q shows some gas cells used for process analysis. The common type transmits the IR beam straight through to the detector. The path lengths range from 0.1 mm to 50.0 cm (0.004 to 19.5 in.). Some of these long cells, especially those used on NDIR analyzers, are internally gold coated to act as a light pipe. The single-beam analyzers can interface with a wider range of cell type, such as multiple reflection cells with path lengths adjustable between 0.75 and 40 m (30.0 in. and 130.0 ft). These long path cells are especially valuable for analyzing trace contaminants in the air.

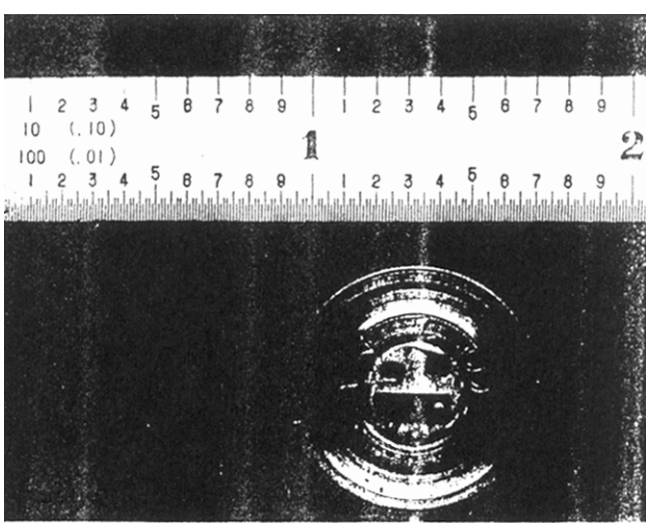

FIG. 8.27p
Photograph of a pyroelectric thermal detector alongside an inch scale; when in use, an IR-transmitting window, or lens, seals the air space in front of the detector.

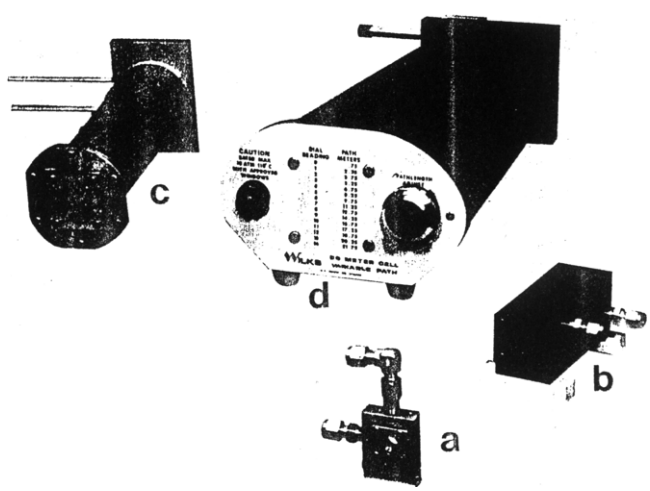

FIG. 8.27q
Cells for use with IR process analyzers. The longer-path-length cells are not conveniently interfaced with single-beam analyzers. (a) 2-mm (0.08-in.) cell, gas, or liquid; volume, 0.4 ml. (b) 10-cm (3.9-in.) gas cell (or liquid for NIR); volume, 50 ml. (c) 50-cm (19.5-in.) gas cell, two passes; volume, 600 ml. (d) 20-m (66-ft) variable-path gas cell; volume, 5.4 l.

© 2003 by Béla Lipták

In choosing a gas cell, one should consider the volume if only small quantities of sample are available or if faster turnover is required. The most efficient cells have a high path length-to-volume ratio. Sample pressure and temperature must be controlled for accurate results because the instrument response depends on the number of sample molecules in the cell.

Liquid Cells: Transmission Type Liquid cells have much shorter path lengths to compensate for the higher-density samples. Thickness varies from 0.1 mm to 10.0 cm (0.004 to 4 in.), the longer cells being used in the NIR region, where sample absorption coefficients are lower. Sample streams must be carefully filtered to avoid cell plugging, particularly when very short (0.1-mm) IR cells are used.

Liquid Cells: Reflection Type The multiple internal reflection (MIR) technique, also called attenuated total reflection (ATR), is a way of avoiding the problems of thin transmission cells. The IR beam makes multiple internal reflections at the surface of a high-refractive index crystal wetted by the sample liquid of lower index of refraction (Figure 8.27r). The effective path length of the beam through the sample depends on the angle of incidence, the refractive indices of the sample and crystal, and the number of reflections.

The method is being used increasingly in mid-IR, with the sample being brought to the MIR cell via a sample loop from the process stream. Additionally, MIR cells have been put directly into the process stream with an optical connection to each end of the crystal. The big advantages of this approach are that no time is lost in the sample system and there is no need to remove solids, as they will not interfere with the measurement and can be used to follow batch reactions without withdrawing samples.

However, inline applications face a number of problems, including 1) mounting an analyzer directly in the process stream; 2) keeping the surface of the crystal, which is wetted by the process stream, free of contaminating films; 3) problems with running calibration checks on the systems; and 4) the difficulty of servicing the crystal without shutting down the process. (If the cell becomes coated with a film, all the spectrometer will see is that film and, therefore, the output becomes a straight line while the process wanders.)

Solid Samples

Sample composition can be determined by analyzing the spectra of IR diffusely reflected from the sample surface. (Note: One is only analyzing the surface with the IR.) The most common application is moisture measurement in, for example, paper as it is being made or feed stocks, such as wood chips (see Section 8.34). Filter analyzers utilizing this principle are used for analyzing grain and other food products for components as protein, oil, and moisture. Most of this work is done in the NIR, where one sees not only the surface but also into the solid, because of the lower absorption coefficients (more on this later in the discussion of NIR).

CALIBRATION: SOURCES OF ANALYZER DRIFT

All IR analyzers require initial calibration with known samples. In general, the strategies of reference wavelengths and reference beams do not reduce sources of zero drift completely, and once in service, the analyzer zero and span must be checked and reset on a routine basis. The user's manual should give guidance on the steps involved.

With constant temperature and pressure samples, an IR analyzer is inherently span stable and, in principle, requires only that the cell path length be constant. However, depending on the analyzer design and operating environment, the span should be checked on a periodic basis. In general, the frequency of requiring span calibration is a function of

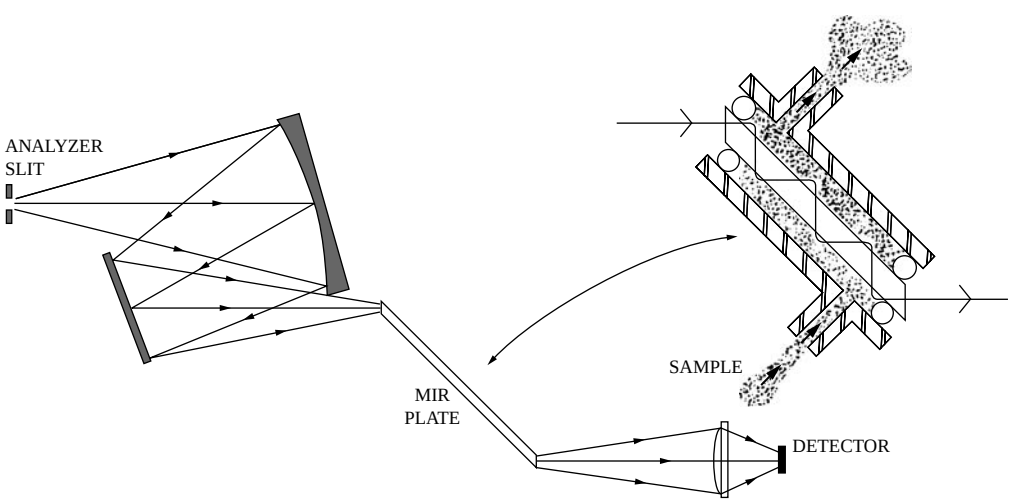

FIG. 8.27r

Optical schematic of an MIR cell suitable for use in a process sample loop interfaced with a single-beam filter analyzer. Materials used for the MIR crystal include sapphire, silicon, germanium, and zinc selenide.

© 2003 by Béla Lipták

the quality of temperature controls provided for the analyzer and the application. In NDIR and GFC analyzers, the characteristics of the gas-filled cells vary with temperature.

Filter analyzers as well as the NDIR and GFC types contain narrow-band-pass filters that change wavelength and absorbance with ambient temperature. For span stability, these filters must be temperature controlled. Long-term stability will be degraded if a high electronic scale expansion of gain is required, because the cell path length is not optimized for the job (as is frequently the case in the more sensitive analysis ranges).

Zero and span samples can be plumbed to a calibration port for use when required. Gas mixtures in cylinders are often used but should themselves be checked, as they are subject to change with age. (The gas can react with the cylinder wall and disappear from the mixture, or it can liquefy and be removed. The liquefaction can be compensated for by heating the cylinder to raise the temperature and constantly stirring the sample; however, this also increases the probability of reaction.)

For gas analyses, the component of interest can sometimes be removed by filtering or catalytic oxidation to provide the zero gas. The zero check is frequently automated using a timer or is built into the memory of a microprocessor-controlled analyzer. Some instruments employ an automated span calibration analogous to the auto zero by inserting a sealed calibration cell or a secondary standard in the form of an attenuating filter into the analyzer beam.

Linearity

The detector response of an IR analyzer is not linearly related to concentration. The filter analyzers for many samples follow the Beer–Lambert law, and a logarithmic amplifier provides an acceptable linear output. However, if the analyzer cannot resolve the sample's absorption features, as is the case for most small gas-phased molecules and some liquids, the measured absorbance will fail to increase linearly at the high absorbances. This is the case with carbon monoxide (Figure 8.27d). These problems, and the nonlinear output of the NDIR and GFC analyzers, are frequently corrected by a linearizing circuit board.

Packaging

There is some uniformity of packaging among manufacturers of NDIR analyzers for panel mounting. At present, there are no intrinsically safe IR analyzers, and they must be packaged in a purged or explosion-proof housing to be acceptable in a hazardous area. Plumbing and sample cells containing flammable samples should be kept outside the enclosure containing the analyzer source and electronics unless flame arrestors are used in the sample lines.

It may be necessary to purge the analyzer head to prevent corrosion or to eliminate absorbing ambient gas molecules from the optical path outside the cell. Many analyzers have a remote readout and control panel option so that the analyzer head can be located close to the measurement site. The IR components are usually mounted on a vibration-isolated rigid structure, and the analyzer head is temperature controlled to some extent.

APPLICATIONS AND ADVANCES

Table 8.27s gives a summary of some common process applications for IR analyzers.

The advances in this technology involve several areas of development. The microprocessor has contributed to the

TABLE 8.27s
IR Analyzer Applications Summary

	Organic Vapors					
Analyzer	*Carbon Monoxide*	*Carbon Dioxide*	*Simple Molecules*	*Complex Molecules*	*Organic Liquids*	*Comments*
Nondispersive infrared (NDIR)	♥	♥	♥			Single-component analysis: methane, ethylene, CO, CO_2, etc.
Mid-IR filter	♥	♥	♥	♥	♥	same as above, including NH_3, vinyl chloride, methylethyl ketone, etc.
FTIR	♥	♥	♥	♥	♥	The advantage of the FTIR is that it can look at multiple species
Correlation spectrometer	♥					Stack analysis, single component gas analysis

© 2003 by Béla Lipták

development of self-diagnostic and self-calibrating designs. Autocalibration was also helped by the use of multiple reference cells when stable reference gases are available. Modular design in conjunction with self-diagnostics has simplified maintenance.

The growth of fiber-optic technology (Section 8.23) made the probe-type IR analyzer practical and extended the spectrum by allowing the same probe to use UV, visible, NIR, and IR forms of radiation. One should be careful with such extended spectrum applications, because windows that are transparent in one region of the spectrum may be opaque in another portion.

The in-line use of MIR or ATR crystal probes (Figure 8.27r) is also promising, although the task of keeping the probe surface clean is not easy to meet.

Another area of development is to minimize the number of moving parts, choppers, shutters, or beam alternators and eliminate the need for multiple paths in the IR analyzer. The goal can be met by the use of acousto-optic tunable filters (AOTFs), which are made of thallium–arsenic–selenide (TAS). This crystal can be tuned by a radio-frequency oscillator, ultrasonic transducer, over a spectrum of 2 to 5.5 microns.[1]

The TAS AOTF is an electronically controllable narrowband filter that can be tuned to any desired IR frequency (Figure 8.27t). It can provide a series of chopped and tuned IR beams to simultaneously measure a variety of stack gases. The required frequencies can be selected in milliseconds, and the solid-state AOTF is small and rugged. Therefore, it is insensitive to vibration, but must be maintained at a constant temperature.

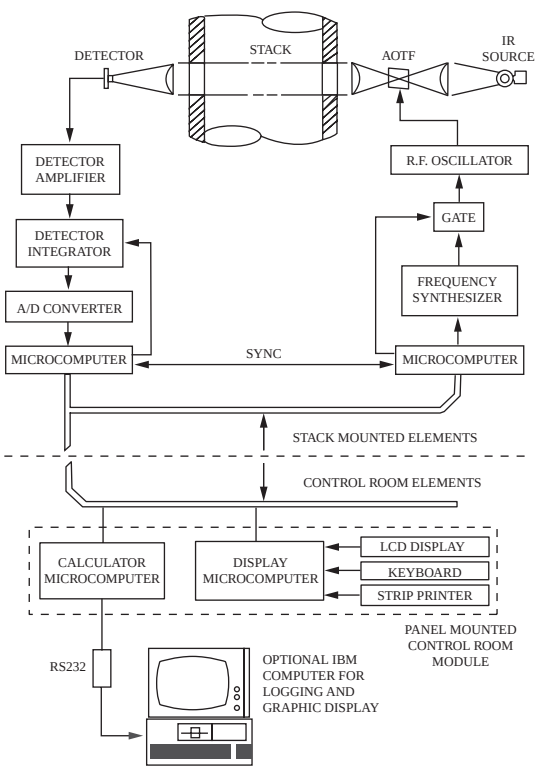

FIG. 8.27t
The solid-state tunable crystal eliminates most of the moving parts from the IR analyzer and allows simultaneous measurement of many gases in the process stream.[1]

TABLE 8.27u
Typical Applications for NDIR Analyzers

Gas	*Minimum Range (ppm) (for 10-m cell)*	*Maximum Range (%)*
Ammonia (NH_3)	0–100	0–10
Butane (C_4H_{10})	0–300	0–100
Carbon dioxide (CO_2)	0–20	0–100
Carbon monoxide (CO)	0–25	0–100
Ethylene (C_2H_4)	0–100	0–100
Hexane (C_6H_{12})	0–100	0–5
Methane (CH_4)	0–10	0–100
Nitrogen oxide (NO)	0–10	0–10
Propane (C_3H_8)	0–100	0–30
Sulfur dioxide (SO_2)	0–100	0–30
Water vapor (H_2O)	0–50	0–5

Table 8.27u lists the minimum and maximum ranges of some of the gases and vapors that are commonly detected by NDIR analyzers. Note: These numbers assume that there are no interfering compounds in the stream.

NEAR-INFRARED ANALYZERS

NIR absorptions are the overtones and combination bands of the IR, particularly involving a hydrogen atom. There are two major effects of this from the on-line analyzer point of view: 1) It is very difficult for a human being to say which band represents which compound. 2) The absorbances are much weaker than in the IR region (about 1/10 weaker per overtone).

This means that the first overtone is 1/10 weaker than the IR, and the second overtone 1/10 weaker than the first. At first glance, both effects appear to be undesirable. Yet, the second turns into a major advantage for analyzing either liquids or solids—the path length is much longer. For solids, this means that more than just the surface is seen and can be analyzed.

With hydrocarbon samples like gasoline, the path length in the IR region would be about 0.1 mm, while in the first overtone of the NIR, it can be about 1 mm, in the second overtone about 1 cm, and in the third overtone about 10 cm. For process applications, the longer path length has three advantages: 1) more uniform sampling, 2) fewer plugging problems, and 3) the window fouling is much less of a problem.

Short path lengths in the IR region can be handled with an ATR or MIR cell, but fouling remains to be a major problem. (Fouling is normally just a surface layer, and with a 10-cm cell, it is not seen.)

© 2003 by Béla Lipták

Interpreting the Absorption Bands

Returning to the first item, difficulty in interpretation of the absorption bands. Normally in the NIR the objective is not to do qualitative analysis, but quantitative analysis with a trained computer. The computer can distinguish quantities of individual chemical species, for example, p-xylene in a mixture of aromatics, including both o-xylene and m-xylene. However, the normal task is to do quantitative analysis of physical properties like hardness of wheat, octane number of gasoline, boiling points of gasoline, cetane number of diesel, etc.

How is the computer trained? A set of samples, normally 30 to 50, is prepared covering the range of interest of all the analytes and "I don't cares" in the system. The spectrum for each sample is determined and paired with the known analyte concentrations. These data are all put into a computer with a chemometric program that uses a system to fit the spectrum to the data. Once that fit has been determined, the generated model can be used for future samples within the range of the initial data.

It is important to remember, that:

1. Before using the model on real samples, it should be tested on some new samples that were not used to make the model. Doing this is desirable, even if time-consuming and inconvenient. Normally one is using 30 to 50 samples, each having 700 to 1000 spectral data points attached; the computer can find a fit, but does it mean anything? The only way to find out is to test it.
2. Extrapolations from that initial data set are done at your risk. For gasoline, we used about 30 samples of each grade and time of year to build complete models to predict the various properties of the gasoline. Note: The 30 samples per grade per time of year are considered as a starting set, and the working models are based on 50 to 100 samples.[4]

Sample Temperature Control

If the sample contains water and one is measuring the ionic solutes, then temperature control is absolutely required. Liquid water exists in different forms related to the number of hydrogen bonds, as a function of temperature, and the change of forms causes spectral shifts that will overcome any other measurements one wants to make concerning the ions dissolved in the water. In hydrocarbon streams, the jury is still out—some claim that sample temperature control within 1°C is required for good analysis, while others say they can compensate for changing temperatures.

Because, in any optical measurement, one is counting molecules in the optical path, temperature will affect the spectrum. Therefore, it is easiest to control the temperature rather than try to compensate for it when doing high-quality work.

Fiber Optics

One of the big advantages of using the NIR range is the availability of optical fibers. Careful, there are optical fibers and there are optical fibers. To be useful for spectroscopic applications, the fiber needs to be insensitive to outside light, temperature changes, and movement (vibrations). The outside light problem can be solved by proper choice of jacket or keeping the fiber encased in an opaque case. (Remember that just because the jacket is opaque in the visible spectrum does not mean it will be opaque in the NIR.)

Temperature changes can cause major problems.[5] In Reference 5, Vickers shows that a 50°C temperature change on a 10-m fiber will cause a change in absorbance at over 1.0 A. K. The solution in such a case is to have a buffer that extracts the cladding modes and have the core, cladding, and buffer coiled inside the jacket to allow for thermal expansion and contraction without straining the fiber.

This system, in addition to adding expense to the fiber, lowers the total light throughput of the fiber, but makes it usable so that one is analyzing the light from the stream rather than from the fiber. Plastic-clad silica fiber is very inexpensive and therefore attractive, but it is totally unacceptable for hydrocarbon analysis; one sees the plastic cladding, and the depth of penetration is a function of temperature, which makes background correction very difficult.

Types of NIRs

NIRs come in four basic types:

1. The filter instrument uses two or more filters to pick out reference and measuring wavelengths. These are the lowest-cost instruments and generally only measure one to a few analytes in the stream.
2. The dispersive units with single detectors and moving grating. The moving grating causes some wavelength instability that becomes a major problem with very sensitive measurements.
3. FTNIR is very similar to FTIR; however, since the frequency and wavelengths are inverse scales, at the shorter wavelengths in NIR there is a higher reproducibility factor required for the mirror movement. However, these have been successfully applied in some very rigorous applications, such as measuring the octane of gasoline.
4. The diode array instrument with no moving parts—note that the material of construction in the diode array sets the usable range of the instrument. The most common diodes are made from silicon that become transparent at wavelengths longer than 1100 nm; therefore, these diode arrays are only usable in the third overtone. [The diode array instrument has no moving parts but requires extreme temperature stabilization to prevent wavelength changes due to different distances between the grating and detector array as a function of temperature.

© 2003 by Béla Lipták

One unit on the market controls the spectrograph temperature to ±0.1°C, while the outside temperature varies from –40 to 120°F (–40 to 50°C).]

Sources

The optical source for any spectrophotometer is important, but it is even more critical with systems based on fiber optics. The only light that is important in a fiber-optic instrument is the light that can be reproducibly launched onto the fiber. Therefore, big bulbs are not needed when trying to put light into a 200-μm-inner-diameter fiber; the key is to have a short, *stable* filament.

Many filaments are long, compared to the fiber diameter, and the hot spot that is giving off the light moves along the filament. Therefore, sometimes the fiber is in focus of the hot spot and sometimes it is not. This is totally unsatisfactory. What one wants is a short filament, where the hot spot stays fixed and the filament does not sag, which requires a larger-diameter filament. This allows the light to be focused onto the fiber and gives a light bulb with a very long life, exactly what is needed for process analysis.

Gases

The only known NIR application on gas samples involves the BTU content of natural gas.[6] In order to make this measurement, the natural gas line would have to be under high pressure, normally 1000 psi or so, in order to provide a sufficient number of molecules in the optical path to make the measurement.

Liquids

Under stable temperature conditions, ions in water can be measured. One analyzer measures the hydroxide ion concentration in a neutralization bath using a filter instrument with the reference chosen to eliminate effects of any other ions. Using third overtone diode array instruments, the octane numbers of gasoline can be determined and, at the same time, measure the MTBE concentration, the boiling points of the gasoline, the Reid Vapor Pressure (RVP), etc.

Crude oil properties have been measured using the second overtone region. The key is to properly model all these values when starting up the analyzer. (These same measurements have been made in the second overtone of the NIR using the FT approach.)

Solids

Modern NIR got its start with Dr. Karl Norris measuring such characteristics of agricultural products as the hardness of wheat, the protein content in wheat, the food value of alfalfa hay, etc. Because in the solids, the natural bandwidth was very wide, the original NIR instruments had poor optical resolution, but very high signal-to-noise ratios to see very small differences in the materials. When Dr. James Callis, University of Washington, CPAC, used one of these instruments to determine the octane of gasoline, it became evident that a great deal of information was discarded due to the poor optical resolution.

The diode array instrument that was developed improved the optical resolution by a factor of 3 and actually also improved the signal-to-noise ratio, which made it a very usable instrument. This resolution is used, for example, to measure MTBE in gasoline by measuring the small shift in the methyl group attached to the oxygen of the MTBE vs. all the other methyl groups in the gasoline.

Calibration Transfer

One of the earlier problems associated with NIR analyzers was that each instrument was different. If a calibration model was build on instrument A, then it could not be used on B, even if B was from the same manufacturer and had the same model number. Dr. Bruce Kowalski and his group at the University of Washington, CPAC, developed methods to solve this problem that have now been incorporated into some of the commercial analyzers.

Since there is a significant amount of time put into developing a model, one should make sure that the model is transferable to a different analyzer or to the same analyzer after maintenance is done on it, for example, when the light bulb is changed.[7]

References

1. Nelson, R. L., "Tunable Crystal IR Analyses," *InTech*, June 1987.
2. Cardis, T. M., "Process FTIR Analysis of a Chlorofluoromethane Stream," 1986 ISA Conference, Houston, October 1986.
3. Mark, H. and Griffiths, P., "Analysis of Noise in Fourier Transform Infrared Spectra," *Applied* Spectroscopy, 633 ff., vol. 56, 2002.
4. Beebe, K. R. et al., *Chemometrics: A Practical Guide*, New York: John Wiley & Sons, 1998.
5. Vickers, G. H. et al., "Influence of Ambient Temperature on the Near-Infrared Transmission of Optical Fibers," Paper 178, Eastern Analytical Symposium, Somerset, NJ, 1990.
6. Van Agthoven, M. A., Mullins, O. C., et al., "Near-Infrared Spectral Analysis of Gas Mixtures," *Applied Spectroscopy*, 56(5), 593–598, 2002.
7. Kowalski, B., "Recent Developments in Multivariate Calibration," *Journal of Chemometrics*, 5, 129–145, 1991; "The Effect of Mean Centering on Prediction in Multivariate Calibration," *Journal of Chemometrics*, 6, 103–111, 1992; "The Parsimony Principle Applied to Multivariate Calibration," Chemometrics in Analytical Chemistry Conference (CAC-92), Montreal, Quebec, Canada, July 14–17, 1992 (*Analytica Chimica Acta*, 277, 165–177, 1993.)

Bibliography for Infrared Analyzers

Cook, B. W. and Jones, K., *A Programmed Introduction to Infrared Spectroscopy*, London: Heyden & Sons, Ltd., 1972.

Dundas, M. E., "New Technologies in Infrared Hydrocarbon Detection," ISA Conference, Houston, TX, October 1992.

© 2003 by Béla Lipták

Ewing, G., *Analytical Instrumentation Handbook*, New York: Dekker, 1997.
Gunnell, J. and Van Vuuren, P., "Process Analytical Systems: A Vision for the Future," *Journal of Process Analytical Chemistry*, 6(1), 1–5, 2001.
Harrick, N. G., *Internal Reflection Spectroscopy*, Ossining, NY: Harrick Scientific Corp., 1979.
Jones, C., "Using Near Infrared Analysis for On-Stream Composition Measurements," *InTech*, August 1982.
Landa, I., "Visible (Vis) Near Infrared (NIR) Rapid Spectrometer for Laboratory and On-line Analysis of Chemical and Physical Properties," *SPIE*, 665, 286–289, 1986.
Mark, H. and Griffiths, P., "Analysis of Noise in Fourier Transform Infrared Spectra," *Applied* Spectroscopy, 633 ff., vol. 56, 2002.
Ryan, F. M., "A New Method of Measuring Stack Emissions," Westinghouse—1985 Electric Utility Engineering Conference, 1985.
Schirmier, R. E., "On-Line Fiber-Optic-Based Near Infrared Absorption Spectrophotometry for Process Control," *Proceedings of ISA*, Houston, 1986, pp. 1229–1235.
Tissis, G. G. and Wolfe, W. L., Eds., *The Infrared Handbook*, Arlington, VA: Office of Naval Research, Dept. of the Navy, 1978.
Van der Maas, J. H., *Basic Infrared Spectroscopy*, London: Heyden & Sons, Ltd., 1972.
Weiss, M. D., "FTIR Moves Out of the Lab," *Control*, September 1991.
Wilks, P. A., "Sampling Method Makes On-Stream IR Analysis Work," *Industrial R&D*, September 1982.
Willis, H. A., *Advances in Infrared and Raman Spectroscopy*, Vol. 2, London: Heyden & Sons, Ltd., 1976, chap. 3.

Bibliography for Near-Infrared Analyzers

Applied Spectroscopy has frequent articles on NIR.
Hardy, L., *NIR Spectroscopy: The BioPharma Guide to Bioanalytical* Methods, pp. 38–40.
Kelly, J. J., Callis, J. B., et al., "Prediction of Gasoline Octane Numbers from Near Infrared Spectral Features in the Range of 600–1215 nm," *Analytical Chemistry*, 61, 313–320, 1989.
MacRae, M., "Analyzing New Options," *Pharmaceutical Technology*, 26(2), 118, 2002.
McClure, W. E., "Near Infrared Spectroscopy, the Giant Is Running Strong," *Analytical Chemistry*, 66, 422 ff., 1994.
Timmermans, J. H., "A Report of the PQRI Workshop on Blend Uniformity," *Phara. Tech.* Spe., 25, 76 ff., 2001.
Van Agthoven, M. A., Mullins, O. C., et al., "Near-Infrared Spectral Analysis of Gas Mixtures," *Applied Spectroscopy*, 56(5), 593–598, 2002.
Vickers, G. H. et al., "Influence of Ambient Temperature on the Near-Infrared Transmission of Optical Fibers," Paper 178, Eastern Analytical Symposium, Somerset, NJ, 1990.

© 2003 by Béla Lipták

8.28 Ion-Selective Electrodes

R. T. OLIVER (1972, 1982) **S. S. LIGHT** (1995) **W. P. DURDEN** (2003)

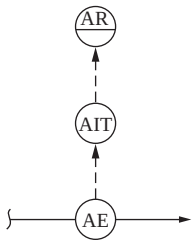

ION SELECTIVE
Flow Sheet Symbol

Types of Electrode:	Glass, solid state, solid matrix, liquid–ion exchanger, gas sensing
Standard Design Pressure:	Generally dictated by electrode holder; 0 PSIG for solid state and liquid–ion exchanger; 0 to 100 PSIG (0 to 7 bars) for most electrode types; over 100 PSIG (over 7 bars) for solid-state designs
Standard Design Temperature:	32 to 122°F (0 to 50°C) for solid matrix and liquid–ion exchange; 23 to 176°F (–5 to 80°C) for most others, with 212°F (100°C) intermittent exposure being permissible
Range:	From fractional parts per million (ppm) to concentrated solutions
Relative Error:	For direct measurements, an absolute error of ±1.0 mV is equivalent to a relative error of ±4% for monovalent ions and ±8% for divalent ions; for end-point detection or batch control, ±0.25% or better is possible; for expanded-scale commercial amplifiers, error is better than ±1% of full scale.
Costs:	Similar to those of pH installations (Section 8.48); electrodes: $120 to $300; systems: $600 to $8000; hand-helds: $50 to $500
Partial List of Suppliers:	(Suppliers who manufacture only pH probes are not listed here; they can be found in Section 8.48.) Advanced Sensor Technologies Inc. (www.astisensor.com) Consort NV (www.consort.be) Corning Science Products (www.corning.com) Denver Instrument (www.denverinstrument.com) Fisher Scientific (www.fisherscientific.com) Horiba Instruments Inc. (www.horiba.com) Honeywell (www.honeywell.com) Istek Inc. (www.istekco.com) Laval Lab (www.lavallab.com) Metrohm AG (www.metrohm.com) Nico 2000 Ltd (www.nico2000.net) Nico Scientific (www.nicosensors.com) OI Corporation (www.oico.com) Omega (www.omega.com) Thermo Orion (www.thermo.com) World Precision Instruments (www.wpi-europe.com)

INTRODUCTION

Ion-selective electrodes comprise a class of primary elements used to obtain information related to the chemical composition of a process solution. They are electrochemical transducers that generate a millivolt potential when immersed in a conducting solution containing free or unassociated ions to which the electrodes are responsive. The magnitude of the potential is a function of the logarithm of the activity of the measured ion (*not* the total concentration of that ion) as expressed by the Nernst equation (Equation 8.28(6)).

The familiar pH electrode for measuring hydrogen ion activity is the best known of the ion-selective electrodes and was the first one to be made commercially available

© 2003 by Béla Lipták

TABLE 8.28a
Ion-Selective Electrodes

Ion/Species	*Type of Electrode*	*Lower Detectable Limit, ppm*	*Principal Interferences*
Ammonia	Gas sensing	0.009	Volatile amines
Bromide	Solid state	0.04	CN^-, I^-, $S^=$
Cadmium	Solid state	0.01	Ag^+, Hg^{++}, Cu^{++}, Fe^{++}, Pb^{++}
Calcium	Solid matrix/liquid membrane	0.2	Zn^{++}, Fe^{++}, Pb^{++}, Cu^{++}, Ni^{++}, Sr^{++}, Mg^{++}, Ba^{++}
Carbon dioxide	Gas sensing	0.4	Volatile weak acids
Chloride	Solid state	0.2	Br^-, CN^-, $S^=$, SCN^-, I^-
Chloride	Liquid membrane	0.2	ClO_4^-, Br^-, I^-, NO_3^-, OH^-, F^-, OAc^-, $SO_4^=$, HCO_3^-
Copper (II)	Solid state	0.006	Ag^+, Hg^{++}, Fe^{+++}
Cyanide	Solid state	0.01	$S^=$, I^-
Divalent cation[a]	Solid matrix/liquid membrane	0.001	
Fluoroborate (BF_4^-), (boron)	Liquid membrane	0.11	I^-, HCO_3^-, NO_3^-, F^-
Iodide	Solid state	0.006	$S^=$, CN^-
Lead	Solid state	0.2	Ag^+, Hg^{++}, Cd^{++}, Fe^{++}
Nitrate	Solid matrix/liquid membrane	0.3	Cl^-, ClO_4^-, I^-, Br^-
Nitrite	Gas sensing	0.002	CO_2, volatile weak acids
Perchlorate	Liquid membrane	0.7	Cl^-, ClO_3^-, I^-, Br^-, HCO_3^-, NO_3^-, etc.
Potassium	Liquid membrane	0.04	Cs^+, NH_4^+, H^+, Ag^+, $Tris^+$, Li^+, Na^+
Redox (platinum)	Solid state	Varies	All redox systems
Silver/sulfide	Solid state	0.01 Ag 0.003 S	Hg^{++}
Sodium	Glass	0.02	Ag^+, H^+, Li^+, Cs^+, K^+, Tl^+
Thiocyanate	Solid state	0.3	OH^-, Cl^-, Br^-, I^-, NH_3, $S_2O_3^=$, CN^-, $S^=$
Sulfur dioxide	Gas sensing	0.06	CO_2, NO_2, volatile organic acids

[a]Water hardness electrode is also known as the divalent cation electrode.

(see Section 8.48 for pH measurement). With few exceptions—notably the silver-billet electrode for halide measurements and the sodium–glass electrode—the pH electrode was the only satisfactory electrode available to the process industry prior to 1966.

Currently more than two dozen electrodes are suitable for industrial use. Table 8.28a lists many of the commercially available electrodes for which process applications have been reported. Many other research sensors have been reported.

THE NERNST EQUATION

The potential developed across an ion-selective membrane is related to the ionic activity as shown by the Nernst equation:

$$E = \frac{2.3\,RT}{nF} \log \frac{a_1}{a_{int}} \qquad \textbf{8.28(1)}$$

where E is the potential developed across the membrane; a_1 is the activity of the measured ion in the sample of process; a_{int} is the activity of the same ion in the internal solution; 2.3 RT/nF is the Nernst slope, or slope of the calibration curve, and is a function of the absolute temperature T and the charge on the ion being measured n; and R is the gas law constant.

Table 8.28b shows how the Nernst slope changes with temperature and the charge on the ion. When the ratio of the two activities is unity, the potential across the membrane is zero.

Equation 8.28(1) assumes that the membrane has identical selectivity properties on both sides. If for some reason this is not true, the equation is written

$$E = E_{asy} + \frac{2.3\,RT}{nF} \log \frac{a_1}{a_{int}} \qquad \textbf{8.28(2)}$$

where E_{asy} is the asymmetry potential and amounts to a few millivolts. This equation is simplified by the fact that a_{int} is fixed by the internal structure of the electrode, giving

$$E = E^{\circ\prime} + \frac{2.3\,RT}{nF} \log\, a_1 \qquad \textbf{8.28(3)}$$

where $E^{\circ\prime}$ is a new constant.

© 2003 by Béla Lipták

TABLE 8.28b
Nernst Slopes

Electrode Temperature		*mV per Decade of Activity*[a]	
°C	°F	$n = \pm 1$	$n = \pm 2$
0	32	54.19	27.10
10	50	56.17	28.08
20	68	58.17	29.08
25	77	59.16	29.58
30	86	60.15	29.58
40	104	62.15	29.58
50	122	64.12	32.03
60	140	66.10	33.05
70	158	68.09	34.04
80	176	70.07	35.04
90	194	72.05	36.02
100	212	74.04	37.02

[a]The slopes are positive for cations and negative for anions.

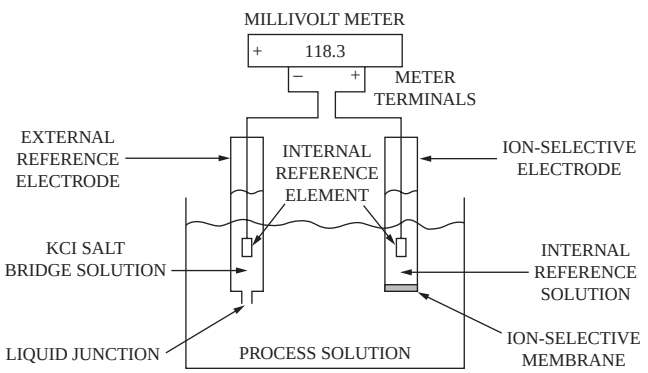

FIG. 8.28c
Ion-selective electrode measuring system.

A more complete equation takes into account electrode interferences and defines the selectivity coefficient. It is known as the Nicolsky equation:

$$E = E^{\circ\prime} + 2.3RT/nF \log (a_1 + k_{ij}a_j)^{zi/zj} \qquad \textbf{8.28(4)}$$

where k_{ij} is the selectivity coefficient of interfering ion j with respect to measured ion i, each ion with charges z_i and z_j.

The Reference Electrode

In actuality, the potential of a single electrode cannot be measured by itself. It can be measured only in conjunction with a reference electrode and a high-input impedance voltmeter (Figure 8.28c). The latter is necessary to prevent current from flowing through the electrode, an action that would tend to cause electrochemical reactions in the solution phase around the membrane.

The potential read on the voltmeter is equal to the algebraic sum of the potentials developed within the system. That is, the observed meter potential is the sum of the potentials developed by the measuring electrode, E, the reference electrode, E_{ref}, and a small but important liquid-junction potential, E_j.

$$E_{meter} = E - E_{ref} + E_j \qquad \textbf{8.28(5)}$$

Under normal operating conditions, the reference electrode is assumed to be constant, as is the liquid-junction potential. However, this is not always the case. Substituting Equation 8.28(3) into Equation 8.28(5) and combining constant terms, including E_{ref} and E_j, gives the general form of the Nernst equation:

$$E_{meter} = E^\circ + \frac{2.3\,RT}{nF} \log\ a_1 \qquad \textbf{8.28(6)}$$

where E° is a constant for a given electrode system at a specific temperature. It depends on the choice of reference electrode and includes the liquid-junction potential.

The Nernst equation for the electrode pair can be written as an instrument input–output equation:

$$\text{Output} = A + B \log (\text{input}) \qquad \textbf{8.28(7)}$$

where the output is a millivolt signal to a meter, A is a zero adjustment, and B is a span or slope adjustment around a temperature-independent, or isopotential, point. The input to the electrodes is the composition of the solution in terms of activity. Equation 8.28(6) states that the output of an electrode pair is linear with respect to the logarithm of the activity of the ion being measured (Figure 8.28d). The slope of the curve relating E_{meter} to log a_1 is 59.16 mV (at 25°C for n = 1) or 29.58 mV (at 25°C for n = 2).

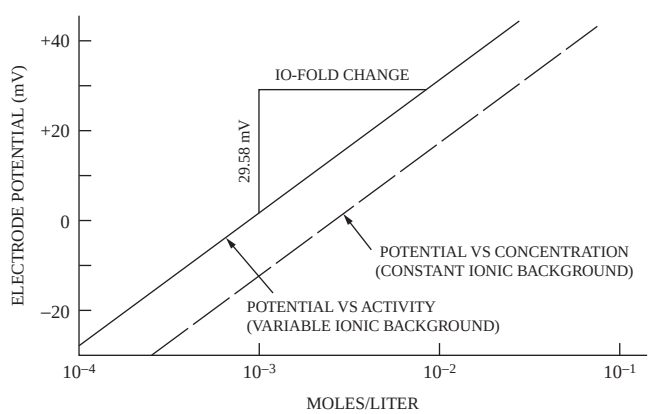

FIG. 8.28d
Electrode potential for calcium chloride solutions as a function of concentration and activity.

© 2003 by Béla Lipták

Concentration and Activity

Ignoring the effects of chemical reactions that would tie up ions, the activity of the ions is related to the analytical concentration, C, as follows:

$$a = \gamma C \qquad \textbf{8.28(8)}$$

where γ is the activity coefficient and is a measure of the interaction among ions in solution. It can be thought of as an empirical factor to explain the difference between the actual behavior of ions in solution and the ideal behavior. At zero ion concentration, that is, no ionic interaction, γ is taken as unity and the activity is equal to concentration. As the concentration increases, γ decreases at first, passes to a minimum value, and then rises, often to values greater than unity in very concentrated solutions.[1]

The activity coefficient is constant when the ionic composition of the solution is constant. Substituting Equation 8.28(8) into Equation 8.28(6) gives

$$E_{meter} = E + \frac{2.3\,RT}{nF}\log\,(\gamma C) \qquad \textbf{8.28(9)}$$

or, at constant total ionic conditions,

$$E_{meter} = E^\circ + \text{constant} + \frac{2.3\,RT}{nF}\log C \qquad \textbf{8.28(10)}$$

where the constant term is RT/nF log γ. Equation 8.28(10) is linear with respect to the concentration term (Figure 8.28d). However, if the ionic background of a solution varies, as in the preparation of a series of standards by dilution, the activity coefficient is no longer constant and Equation 8.28(9) is nonlinear (Figure 8.28e).

Equation 8.28(6) can predict the change in potential to be expected from a given change in activity or concentration (constant activity coefficient). For instance, if the activity changed twofold (100% change), then

$$E_{meter} = E^\circ + \frac{2.3\,RT}{nF}\log\,2a_1 \qquad \textbf{8.28(11)}$$

Subtracting Equation 8.28(6) from Equation 8.28(11) gives

$$\Delta E = \frac{2.3\,RT}{nF}\log 2 \qquad \textbf{8.28(12)}$$

or 18 mV at 25°C for n = 1. A similar argument would show that for the same sample, an 18-mV decrease would be observed if the initial activity was cut in half (50% change).

This change is not dependent on the magnitude of a_1 and is the same whether measuring fluoride at the parts per million (ppm) level, chloride in 4% salt solutions, or the pH of a 15% sulfuric acid solution. Table 8.28f lists the changes in potential to be expected for up to a 10-fold change in activity. Column 1 shows the ratio of the original activity a_1 to the final activity a_2.

The last column shows the equivalent pH change if the $[H^+]$ were being measured. The data indicate that for precise measurements of small changes in activity, it is necessary to use an expanded-scale meter. For example, a span of 60 mV would allow a 10-fold change to be measured, using the full scale of the measuring instrument.

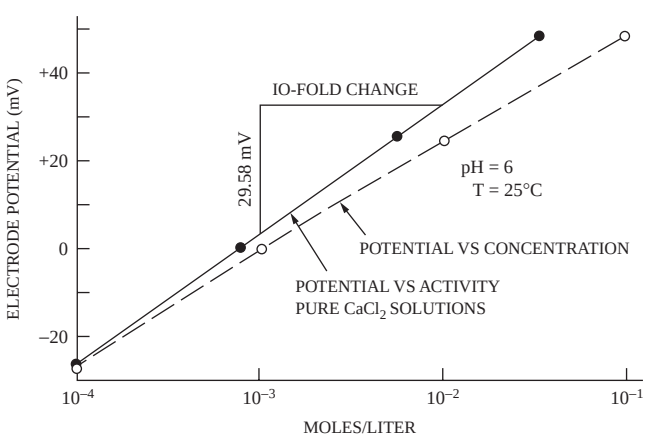

FIG. 8.28e
Concentration and ion activity vs. electrode potential.

Ionic Strength Adjustment Buffers

Introduction of the concept of the high-ionic-strength medium serves to remove or minimize two of the disadvantages of ion-selective electrodes. The concentration, rather than the activity, may be interpreted directly from the observed

TABLE 8.28f
Changes in Meter Potential for Changes of Activity[a]

$\frac{\sigma_1}{\sigma_2}$	ΔE to mV (77°F (25°C))		Equivalent pH change (n = 1)
	n = 1°	n = 2°	
0.1	–60[b]	–30[b]	–1.0
0.25	–36	–18	–0.6
0.5	–18	–9	–0.3
0.79	–6	–3	–0.1
1.00	0	0	0.0
1.26	+6	+3	+0.1
2.00	+18	+9	+0.3
4.00	+36	+18	+0.6
10.00	+60	+30	+1.0

Note: Data are for positive ions. For negative ions, sign should be reversed.
[a]See Equation 8.28(12).
[b]Values rounded off from 59.16 and 29.58 (see Table 8.28j).

© 2003 by Béla Lipták

TABLE 8.28g
Composition of TISAB, a High-Ionic-Strength Buffered Complexing Medium for Measuring Fluoride Ion Concentration[2]

Sodium chloride	1.0 *M*
Acetic acid	0.25 *M*
Sodium acetate	0.75 *M*
Sodium citrate	0.001 *M*
Ionic strength	1.75 *M*
pH	5.0

electromotive force (emf) (see Equations 8.28(9) and 8.28(10)); some *chemical* and electrode interferences are removed.

The high-ionic-strength media are frequently designated by the acronym ISAB, which stands for ionic strength adjustment buffer. Table 8.28g illustrates the composition of total ionic strength adjustment buffer (TISAB).[2] TISAB is used for rendering the fluoride ion electrode virtually specific for the measurement of the total concentration of fluoride ion in solution, even if the test solution has a pH outside of the acceptable range and fluoride-complexing ions such as iron or aluminum are present.

In spite of small contributions from the test solution, the high concentration of sodium chloride fixes the ionic strength at a virtually constant value. The acetate–acetic acid buffer holds the pH into the optimum range for the fluoride electrode, and the citrate complexes commonly interfering ions such as iron and aluminum more firmly than does the fluoride.

ISAB solutions for other ions have been described in the literature and are available commercially. To utilize ISAB solutions for continuous process measurements, reagent addition systems are employed that mix the test and ISAB solutions together, utilizing process pressure or peristaltic (or other types) pumps.

Temperature Effects[3]

There are three temperature effects on ion-selective measurements, including the T term in the Nernst equation (see Table 8.28b), the thermal characteristics of the electrodes, and the thermal characteristic of the solution.[3] The T term in Equation 8.28(6) states that the potential produced by the electrode system is a function of temperature as well as of ion activity.

This effect can be compensated for, manually or automatically, by manipulating the input signal to the converter to indicate the true activity at the measured temperature. Temperature can also be compensated for by so designing the electrode pair that there is a zero temperature error at a particular ion activity. Figure 8.28h shows this effect for the fluoride electrode used to control the fluoridation of public water supplies.

The Isopotential Point The point at which the temperature curves intersect, 1 mg° F/I, is the control level for fluoridation. This point of intersection is called the isopotential point,

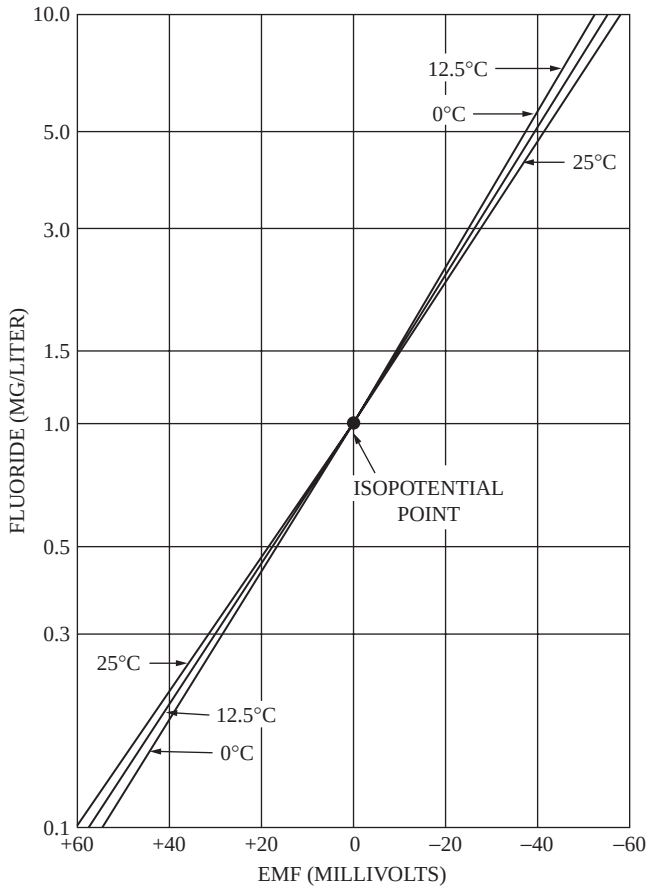

FIG. 8.28h
Isopotential point for fluoride electrode.

and temperature effects are negligible on either side for a 18 to 27°F (10 to 15°C) change in temperature. The isopotential point for pH-measuring systems is normally about pH 7 and has a potential value of 0 mV.

The activity coordinate of the isopotential points of the solid-state electrodes is fixed during manufacture, whereas the millivolt coordinate is also dependent on the choice of reference electrode. However, due to the construction of the liquid-membrane electrode, the isopotential points can be changed to fit the process.

Role of Electrode Internals and Calibration The second effect associated with temperature is created by the different internal thermal characteristics of the measuring and reference electrodes. This effect can be minimized if the internal elements of the measuring electrode are matched to the reference electrode. Most commercial pH systems employ matched internal elements for both electrodes.

The temperature effect on the chemistry of solutions is the third factor that can create an apparent error in measurement. This effect is difficult to quantify but can be offset by calibrating the system with preanalyzed process samples at the expected process temperature.

© 2003 by Béla Lipták

It should be noted that this is not a system error. The electrode indicates the true activity as a function of temperature changes. As long as the status of the process is what is required, the solution temperature effect is not important because the true activity is the quantity desired. This effect is usually not compensated for by the measuring instrumentation.

After sudden changes, time is required for a new state of thermal equilibrium to the reached (approximately one-half hour for a 18 to 27°F (10 or 15°C) change). Therefore, it is important to remember that when electrodes are moved from process samples to standard samples, which are at a different temperature, or when sudden and large process temperature changes occur, one should wait until a new thermal equilibrium is reached. During this time, the potential of the electrode system will drift. The duration of the drift depends on the particular electrode system and the magnitude of the temperature change. Therefore, it is important to avoid changes in temperature during calibration or to allow thermal equilibrium to be established.

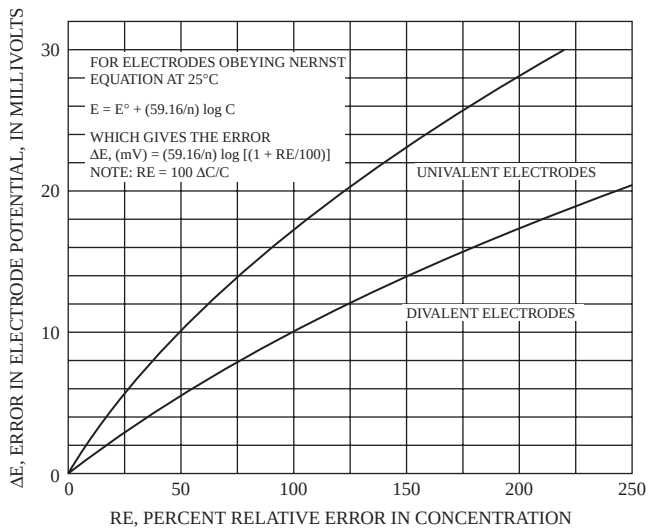

FIG. 8.28i
Relative error in concentration as a function of theoretical error in potential.

System Accuracy

The accuracy of measurements derived from an analytical system is a composite of all contributing variables. These variables for ion-selective measuring systems are the measuring electrode; the reference electrode, including the liquid-junction potential; the selective-ion potential converter; the recorder; and the temperature and solution errors.

The relationship between overall emf errors (ΔE) and ionic concentration (C) may be derived from the Nernst equation 8.28(6) by substituting the values of the thermodynamic constants R and F and assuming that the activity coefficient (γ) is unity in Equation 8.28(8) at 25°C.

$$\Delta E = (59.16/n)\log\,(1 + (RE)/100) \qquad \textbf{8.28(13)}$$

where RE represents the percent relative error in the concentration

$$RE = 100\Delta C/C \qquad \textbf{8.28(14)}$$

A plot of Equation 8.28(13) is given in Figure 8.28i.

The *relative* error in measuring activity is dependent only on the *absolute* error in the emf and is independent of the activity range and of the size of the sample being measured. This is similar to an equal percentage valve in which equal incremental changes in valve opening (electrode potential) produce equal percentage changes in flow (RE in activity) for all valve openings—assuming constant differential pressure (constant temperature). Being a logarithmic device, an electrode gives a constant precision throughout its dynamic range. Concentrated solutions can be analyzed with the same accuracy as dilute solutions.

Laboratory Devices Laboratory measuring instruments for ion-selective electrode measurements with an uncertainty of ±0.1 mV have become commercially available. It is possible to make laboratory pH measurements within an error of ±0.002 pH units (equivalent to ±0.12 mV). Similarly, under carefully controlled conditions, ion-selective electrodes may be made repeatable within 0.1 mV. The accuracy attained to date in process instruments has been limited by the reference rather than by the ion-selective electrodes.

Process Applications Ion-selective measurement systems for process applications are repeatable to ±1 mV. For an electrode responding to univalent ions, an overall error of 1 mV corresponds to a 3.9% relative error in activity; for an electrode responding to divalent ions, the relative error is 7.8% per millivolt.

This means that they are roughly 5% (of value in activity) devices when measuring univalent ions, including H^+, in acidic or basic solutions or 10% (of value in activity) devices when making divalent ion measurements. These figures apply only to direct electrode measurements. When electrodes are used as end-point detectors in titrations or batch reactions or in differential systems, relative errors of 0.1% are possible.

TYPES OF ELECTRODES

Glass

Ion-selective electrodes are classified according to the type of sensing membrane employed. Glass electrodes are constructed from specially formulated glass and respond to ions by an ion exchange of mobile ions within the membrane structure. The membrane is fused to a glass body so that the outer surface makes contact with the sample or process stream, while the inner surface makes contact with an internal filling solution

© 2003 by Béla Lipták

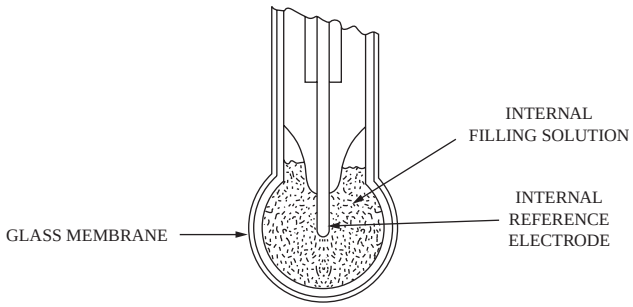

FIG. 8.28j
Conventional glass pH electrode.

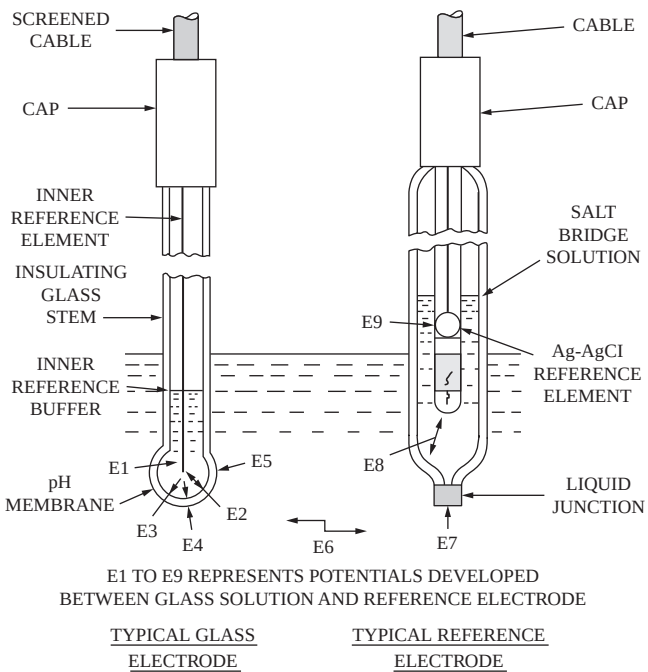

FIG. 8.28k
pH electrodes.

containing a constant activity of the ion for which the membrane is sensitive (Figure 8.28j).

A stable electrical contact is made with the internal solution by a silver wire coated with silver chloride. Other internal contacts have been used (mercury–mercurous chloride or thallium amalgam thallous chloride), but the silver–silver chloride is the most popular. The internal filling solution must contain a constant chloride–ion activity and be saturated with silver chloride so that a stable potential is maintained at the metal salt–solution interface (Figure 8.28k).

In the conventional glass electrode, the internal solution is buffered at a pH of 7 and contains a chloride level similar to that in the external reference electrode (for details of reference electrodes, see Section 8.48). Other glass electrodes in process use are the sodium, ammonium, and potassium ion electrodes.

In addition to the concentration already described, the sodium electrode can also be prepared by slicing a thin section

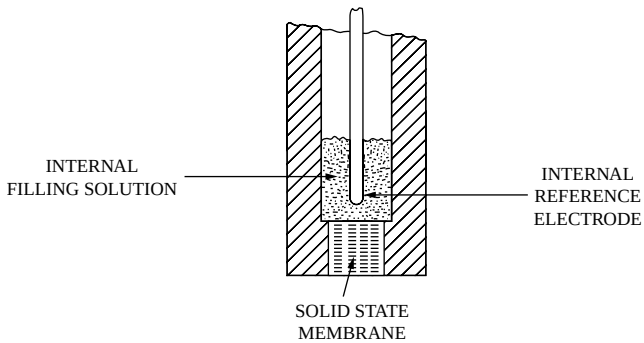

FIG. 8.28l
Solid-state membrane electrode.

TABLE 8.28m
Solid-State Electrodes and Their Membrane Composition

Electrode	*Membrane*	*Form*
Fluoride	LaF_3	Single crystal
Silver/sulfide	Ag_2S	Pressed pellet
Chloride	AgX[a]	Single crystal
Bromide or iodide	AgX—Ag_2S	Pressed pellet
Cyanide	AgI—Ag_2S	Pressed pellet

[a]X = Cl, Br, or I.

from a rod of sodium-sensitive glass and cementing it to an epoxy body (Figure 8.28l). This eliminates the familiar glass body of the pH electrode. Epoxy construction is not yet available for pH measurement due to difficulties inherent in cementing pH glasses to epoxy.

A carbon dioxide and an ammonia electrode can be made from a pH electrode by covering the membrane with a permeable-membrane sac filled with pH buffer. The respective gas in solution will selectively diffuse in or out of the permeable membrane, causing a pH change. The latter is dependent on the activity of the gas in the process solution.

Solid State

Solid-state electrodes are made of crystalline membranes, and there are scrupulous requirements for the size and charge of the mobile ions within the membrane. The composition of the membrane varies as a function of the required measurement. For instance, the fluoride electrode has a single crystal of doped lanthanum fluoride for a sensing membrane.

The silver and sulfide membranes are pressed pellets of insoluble silver sulfide. The small solubility of silver sulfide in solution prevents the coexistence of silver and sulfide ions, except in extremely small amounts, and the electrode can be used to measure either of these ions. Like the sodium electrode, these membranes are sealed in epoxy bodies (Figure 8.28l). Table 8.28m lists some of the commercially available solid-state electrodes and the composition of their sensing membranes.

© 2003 by Béla Lipták

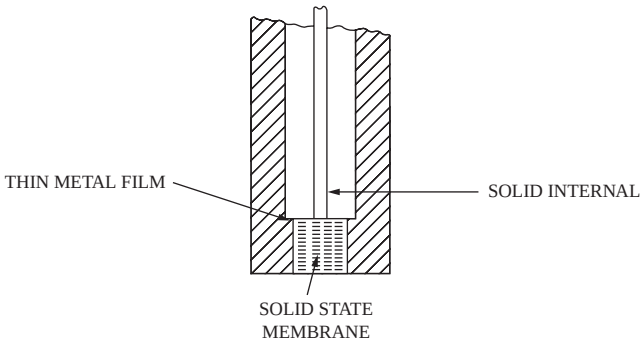

FIG. 8.28n
Solid-state membrane electrodes with solid internals.

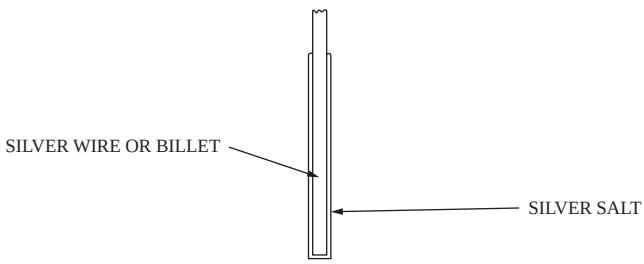

FIG. 2.28o
Conventional silver–silver electrode.

Some pressed pellets and the single crystalline silver–salt membranes are capable of having a metal deposited on the surface and an electrical lead connected to the metal deposit (Figure 8.28n). A solid connector permits the use of the electrodes in any position without breaking electrical continuity. Also, there are no internal solutions to deteriorate with time or temperature.

Figure 8.28o shows a conventional silver wire or silver-billet electrode that behaves identically to its corresponding solid-state electrode. However, small imperfections in the silver–halide coating expose free silver metal to the process solution, thereby developing variable oxidation–reduction potentials, and these electrodes have not found wide use in industrial applications. When placed in clean, controlled environments, such as the inner-filling solution of ion-selective electrodes, they produce stable reference potentials.

Liquid–Ion Exchange

There are many ions for which no glass or crystalline membrane can be found that is suitable for process measurements. Fortunately, chemistry is a versatile field and by using techniques familiar in ion exchange and solvent extraction technology, electrodes can be built for some of these ions. An inert hydrophobic membrane, such as a treated filter paper, can be made selective to certain ions by saturating it with an organic ion exchange material dissolved in an organic solvent.

This feature requires a construction of the electrode, as shown in Figure 8.28p, which is a cross section of the tip of

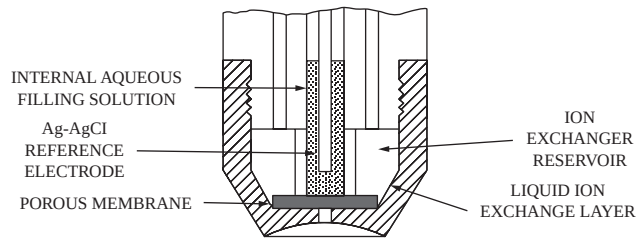

FIG. 8.28p
Divalent cation electrode tip in cross section.

a liquid–ion exchange electrode. This electrode has two filling solutions, an internal aqueous filling solution in which the silver–silver chloride reference electrode is immersed, and an ion exchange reservoir of a nonaqueous water-immiscible solution, which *wicks* into the porous membrane.

The membrane serves only as a support for the ion exchange liquid and separates the internal filling solution from the unknown solution in which the electrode is immersed. In effect, there is a sandwich, with the bottom layer being the unknown process solution, the filling being the nonaqueous liquid–ion exchange solution, and the top layer being the internal aqueous solution. For example, if the liquid–ion exchanger is selective for calcium, a potential across the membrane is created by the difference in calcium activity between the internal filling solution and the process solution.

The electrode is designed so that the liquid–ion exchanger, used as a sensing element, has a very small positive flow into the process stream. Therefore, liquid–ion exchange membrane electrodes require recharging with an ion exchanger. Liquid–ion exchange membrane electrodes come in kit form. The kit contains an electrode body and sufficient ion exchanger, internal filling solution, and membranes to recharge the electrode many times. A single recharging should last several months in a properly designed system. Unlike the solid-state or glass electrodes, liquid membrane electrodes cannot be used in nonaqueous solutions because they would dissolve the liquid–ion exchanger. The body of the electrode is a chemical-resistant plastic.

Solid-state matrix electrodes are an improvement over liquid–ion exchange electrodes. The ion exchanger is permanently embedded in a plastic matrix, such as polyvinyl chloride, with a nonporous membrane. Rebuilding or solution replenishment is not required, and improved analytical performance and lower limits of detection are obtained.

MEASUREMENT RANGE

The upper limit of detection for ion-selective electrodes is the saturated solution. However, due to the problems of making measurements with reference electrodes that have large liquid-junction potentials (Section 8.48), the electrodes are specified as having an upper limit of 1 *M*. If the problems of large liquid junctions are brought under control, measurements can be made in saturated or nearly saturated solutions.

© 2003 by Béla Lipták

The lower limit of detection is usually determined by the solubility of the solid-state-sensing element or the liquid–ion exchanger. The solution pH sometimes determines the lower limit of detection. Some dilute solutions are unstable, but activity measurements may be made if the solution is buffered with respect to the ion being measured, that is, if the free ion is in equilibrium with a relatively large excess of complexed ion. This is the case when free silver is measured in photographic emulsions or sulfide, cyanide, or fluoride in acid solutions.

INTERFERENCES

All ion-selective electrodes are similar in principle of operation and use. They differ only in the details of the process by which the ion to be measured moves across the membrane and by which other ions are kept away. Therefore, a discussion of electrode interferences will have to be in terms of the membrane materials.

The glass electrodes and the solid matrix/liquid–ion exchange electrodes both function by an exchange of mobile ions within the membrane, and ion exchange processes are not specific. Reactions will occur among many ions with similar chemical properties, such as the alkali metals, alkaline earths, or transition elements. Thus, a number of ions may produce a potential when a given ion-selective electrode is immersed in a solution.

Even the pH glass electrode will respond to sodium ions at a very high pH (low hydrogen ion activity). Fortunately, an empirical relationship can predict electrode interferences, and a list of selectivity ratios for the interfering ions can be obtained by consulting the manufacturers' specifications or the chemical literature. Selectivity constants will be described in connection with Equation 8.28(3).

Solid–state matrix electrodes are made of crystalline materials, and interferences resulting from ions moving into the solid membrane are not to be expected. Interference is usually by a chemical reaction with the membrane. One, which is observed with the silver–halide membranes (for chloride, bromide, iodide, and cyanide activity measurements), involves reaction with an ion in the sample solution, such as sulfide, to form a more insoluble silver salt. As already mentioned, specific details of electrode side reactions can be found in the manufacturers' specifications and chemical literature.

Solution Interference

A true interference is one that produces an electrode response that can be interpreted as a measure of the ion of interest. For example, the hydroxyl ion, OH^-, causes a response with the fluoride electrode at fluoride levels below 10 ppm. In addition, the hydrogen ion, H^+, creates a positive interference with the sodium ion electrode.

Often an ion will be regarded as interfering if it reduces the activity of the ion of interest through chemical reaction. It is true that this reaction (complexation, precipitation, oxidation–reduction, and hydrolysis) results in an activity of the ion that differs from the concentration of the ion by an amount greater than that caused by ionic interactions. However, the electrode is still measuring the true activity of the ion in the solution.

An example of solution interference will illustrate this point. Silver ion in the presence of ammonia forms a stable silver–ammonia complex that is not measured by the silver. Only the free, uncombined silver ion is measured. The total silver ion may be obtained from calculations involving the formation constant of the silver–ammonia complex and the fact that the total silver is equal to the free silver plus the combined silver. Alternately, a calibration curve can be drawn relating to the total silver (from analysis or sample preparation) to the measured activity. The ammonia is *not* an electrode interference.

Most of the confusion stems from the fact that analytical measurements have been in terms of concentration without regard to the actual form of the material in solution, and electrode measurements often disagree with the laboratory analyst's results. However, the electrode reflects what is actually taking place in the solution at the time of measurement. This may be far more important in process applications than the more classic information. With some of the techniques suggested, the two measurements are often reconciled.

CALIBRATION SOLUTIONS

Calibration solutions for ion-selective systems are not normally buffered to resist changes, as are the standard solutions for pH systems. They can therefore be affected by dilution, evaporation, oxidation, or contamination by foreign matter in the process fluid. Thus, more care must be taken in preparing and handling these solutions than is generally needed in a typical pH application. Attention should be paid to eliminate carryover from one test solution to another from distilled water rinses.

Calibration solutions should be prepared in accordance with accepted principles of analytical chemistry. Many common chemical standards are available as stock solutions from laboratory supply houses. Generally, only solutions at a reasonably high concentration level (greater than 0.01 *M* or 100 ppm) should be made for storage. Serial dilutions of these stock solutions should be made at the time of use because very dilute solutions are particularly likely to lose some of their ions by absorption of the walls of the storage vessels. Use of high-grade plastic storage bottles is recommended.

Table 8.28q lists some solutions frequently used to check the performance of an ion-selective measuring system. When the ionic background is held constant (sulfide, chloride cyanide, and pH), the potential difference between two of these solutions is Nernstian (see Table 8.28b). For others, the potential difference should be normalized to decide changes in activity.

© 2003 by Béla Lipták

TABLE 8.28q
Calibrating Solutions for Ion-Selective Electrodes

Electrode	*Chemical Composition*	*Ionic Concentration*	*Approximate Ion Activity*	*Approximate emf vs. 1.0 M KCl, AgCl, Ag Reference at 77°F (25°C)*
Hydrogen (pH)	0.05 *M* KH phthalate	4.008 pH buffer at 25°C	$10^{-4.008}$ *M* H^+/L	+143 (+178)[a]
	0.025 *M* KH_2PO_4 + 0.025 *M* + Na_2HPO_4	6.86 pH buffer at 25°C	$10^{-6.86}$ *M* H^+/L	−35 (0)[a]
	0.01 *M* borax	9.18 pH buffer at 25°C	$10^{-9.18}$ *M* H^+/L	−149 (−114)[a]
Fluoride	22.10 mg NaF/L	10.0 mg F^-/L	9.8 mg F^-/L	−59
	2.21 mg NaF/L	1.0 mg F^-/L	1.0 mg F^-/L	0.0
Chloride	1.00×10^{-2} *M* KCl in 1.00 *M* KNO_3	1.00×10^{-2} *M* Cl^-	0.61×10^{-2} *M* Cl^-	+118
	1.00×10^{-3} *M* KCl in 1.00 *M* KNO_3	1.00×10^{-3} *M* Cl^-	0.61×10^{-2} *M* Cl^-	+177
Silver	1.00×10^{-2} *M* $AgNO_3$	1.00×10^{-2} *M* Ag^+	0.90×10^{-2} *M* Ag^+	+443
	1.00×10^{-3} *M* $AgNO_3$	1.00×10^{-3} *M* Ag^+	0.96×10^{-3} *M* Ag^+	+385
Sulfide	1.00×10^{-1} *M* Na_2S in 1.00 *M* NaOH	1×10^{-1} *M* $S^=$	0.15×10^{-1} *M* $S^=$	−860
	1.00×10^{-3} *M* Na_2S in 1.00 *M* NaOH	1×10^{-3} *M* $S^=$	0.15×10^{-3} *M* $S^=$	−800
Cyanide	1.00×10^{-3} *M* NaCN in 1.00×10^{-1} *M* NaOH	1.00×10^{-3} *M* CN^-	0.76×10^{-3} *M* CN^-	−192
	1.00×10^{-4} *M* NaCN in 1.00×10^{-1} *M* NaOH	1.00×10^{-4} *M* CN^-	0.76×10^{-3} *M* CN^-	−133
Water hardness	1.00×10^{-2} *M* $CaCl_2$	1.00×10^{-2} *M* Ca^{++} or 1000 mg/l as $CaCO_3$	0.55×10^{-2} *M* Ca^{++} or 550 mg/l as $CaCO_3$	+34
	1.00×10^{-4} *M* $CaCl_2$	1.00×10^{-4} *M* Ca^{++} or 10 mg/l as $CaCO_3$	0.92×10^{-4} *M* Ca^{++} or 9.2 mg/l as $CaCO_3$	−18

[a]Vs. 4 *M* KCL, AgCl, Ag reference electrode at 25°C.

To achieve the utmost in accuracy and meanin1397 1397gful measurements, the ion-selective measuring system should be standardized, and thus optimized, in a solution carefully chosen to be chemically similar to the process solution at the point of prime interest. This solution should be at a stable temperature near the actual process temperature (±3.6°F (±2°C)). A grab sample of the process solution analyzed in the laboratory may be the best and most convenient standard to use.

ADVANTAGES AND DISADVANTAGES

Compared to other composition-measuring techniques, such as photometric, titrimetric, chromotographic, or automated-classic analysis, the ion-selective electrode measurement has an impressive list of advantages. An electrode measurement is simple, rapid, nondestructive, direct, and continuous, and, therefore, easily applied to closed-loop process control. In this respect, it is similar to using a thermocouple for temperature control. Electrodes can also be used in opaque solutions and viscous slurries. In addition, the electrodes measure the free or active-ionic species in the process, under process conditions, and consequently the status of a process reaction.

However, there are several disadvantages. The specificity of ion-selective electrodes is not quite as good as that of the glass pH electrode. Interferences vary from minor to major; the literature and manufacturers' data on limitations need to be consulted for each electrode. Also, the electrodes do not measure the total concentration of ions, the parameter that is often requested. The reason is that prior to the introduction of electrodes, concentration information was the only information available from the chemist due to his classic measurement techniques. Control laboratory chemists and process engineers are not accustomed to thinking in terms of activity, even when making pH measurements (Section 8.48). This habit may well disappear as this new ion-selective technique becomes more popular.

There are some manufacturers that have begun packing the electrodes separately and installing them in a junction head. This allows the ion-selective electrodes to be independently replaced and stored dry. The reference electrodes are also independently replaced and stored wet. This allows the best of both worlds for storage life and cost of replacement.

However, there are times when concentration is a desirable measurement, for example, material balance calculations or pollution control. The knowledge of material balance allows a prediction as to where a process reaction will be in the future. This information is necessary if a process is to be controlled by introducing changes that will nullify those predicted.

In pollution control, it is generally accepted that many ions, even in the combined state, are detrimental to life forms. Fluorides, cyanides, and sulfides, to name a few, are harmful to fish and humans in many combined forms. Yet, their sum total is not measured, but they are detected individually by

© 2003 by Béla Lipták

ion-selective electrodes. Consequently, pollution control agencies usually require concentration information.

The electrodes can be used for this purpose if they are calibrated with solutions matching the process or with ISAB solutions (see below). If this is not satisfactory, an electrode can be used for on-line control, and separate grab samples can be analyzed by other procedures to obtain the information needed to comply with regulations.

Precision and Accuracy

Another disadvantage derives from a misunderstanding about precision and accuracy. Many classic analytical techniques name a relative error of ±0.1%. Ion-selective electrodes name relative errors of ±4 to 8% (see "System Accuracy" earlier in this section). In terms of pH, this is equivalent to a measurement of ±0.02 pH units—ordinarily regarded as a satisfactory measurement.

When used with some degree of understanding, ion-selective electrodes can supply satisfactory composition information and afford closed-loop control that was previously unattainable. When in doubt, the user should consult with the electrode manufacturers or his own analytical chemists.

CONCLUSIONS

It is evident from the preceding discussion that ion-selective electrode measurements and pH measurements using the glass electrode are not only identical in theory, but also similar in practice. The electrodes are generally the same size and fit the pH holder assemblies.

Electrical insulation of the electrodes is as important as with the glass electrode. In addition, the electrodes are subject to the same fouling by oils and slimes as glass electrodes and can, in general, be cleaned using methods already proven for the pH electrodes. Because of these similarities, discussion of the application of ion-selective electrodes is omitted here.

References

1. Frankenthal, R. P., in *Handbook of Analytical Chemistry,* Meites, L., Ed., New York: McGraw-Hill, 1963, p. 1, Table 1-8.
2. Frant, M. S. and Ross, J. S., Jr., "Use of a Total Ionic Strength Buffer for Electrode Determination of Fluoride in Water Supplies," *Analytical Chemistry,* 40, 1169, 1968.
3. Negus, L. E. and Light, T. S., "Temperature Coefficients and Their Compensation in Ion-Selective Systems," *Instrumentation Technology,* 19, 23–26, 1972.

Bibliography

Bailey, P. L., *Analysis with Ion-Selective Electrodes,* 2nd ed., London: Heyden & Son, Ltd., 1980.

Bates, R. G., *Determination of pH,* 2nd ed., New York: John Wiley & Sons, 1973.

Bergveld, P. and Sibbald, A., *Analytical and Biomedical Applications of Ion-Selective Field-Effect Transistors ("ISFETS"),* Vol. 23, New York: Elsevier, 1988.

Berman, H. J. and Hebert, N. C., Eds., *Ion-Selective Microelectrodes,* New York: Plenum Press, 1974.

Cammann, K., *Working with Ion-Selective Electrodes: Chemical Laboratory Practice,* Berlin: Springer-Verlag, 1979.

Control Staff, "How Can pH Probe Fouling Be Reduced," *Control,* October 1992.

Covington, A. K., *Ion-Selective Electrode Methodology,* Vols. 1 and 2, Boca Raton, FL: CRC Press, 1978.

"Detecting Pollutants with Chemical-Sensing Electrodes," *Environmental Science and Technology,* March 1974.

Edmonds, T. E., Ed., *Chemical Sensors,* New York: Chapman & Hall, 1988.

Evans, A., *Potentiometry and Ion-Selective Electrodes,* New York: John Wiley & Sons, 1987.

Freiser, H., Ed., *Ion-Selective Electrodes in Analytical Chemistry,* Vols. 1 and 2, New York: Plenum Press, 1978 and 1980.

Gennett, T. and Purdy, W. C., "Electrochemical Sensors, Part 1: A Review of Their Theory," *American Laboratory,* 23, 60–64, 1991; "Electrochemical Sensors, Part 2: Recent Advances," *American Laboratory,* 60–66, 1991.

Janata, J., *Principles of Chemical Sensors,* New York: Plenum Press, 1989.

Janata, J., "Chemical Sensors," *Analytical Chemistry,* 62, 33R–44R, 1990 (review).

Koryta, J., *Ion-Selective Electrodes,* London: Cambridge University Press, 1975.

Light, T. S., "Industrial Analysis and Control," in *Ion Selective Electrodes,* Durst, R. A., Ed., National Bureau of Standards Special Publication 314, Washington, D.C., 1969, chap. 10.

Light, T. S., "Potentiometry: PH and Ion-Selective Electrodes," in *Analytical Instrumentation Handbook,* Ewing, G., Ed., New York: Marcel Dekker, 1990.

Linder, E., Toth, K., and Pungor, E., *Dynamic Characteristics of Ion-Selective Electrodes,* Boca Raton, FL: CRC Press, 1988.

Madou, M. J. and Morrison, W. R., *Chemical Sensing and Solid State Devices,* New York: Academic Press, 1989.

Moody, G. J. and Thomas, J. D. R., *Selective Ion-Sensitive Electrodes,* Watford, U.K.: Merrow, 1971.

Murray, R. W., Dessy, R. E., Heineman, W. R., Janata, J., and Seitz, W. R., Eds., *Chemical Sensors and Microinstrumentation,* American Chemical Society Symposium Series No. 403, Washington, D.C., 1989.

Rundle, C. C., "A Beginners Guide to Ion-Selective Electrode Measurements," http://www.nico2000.net/Book/Guide1.html.

Solsky, R. L., "Ion-Selective Electrodes," *Analytical Chemistry,* 62, 21R–33R, 1990 (review).

Vesely, J., Weiss, D., and Stulik, K., *Analysis with Ion-Selective Electrodes,* New York: Halsted Press/John Wiley & Sons, 1978.

Weber, S. J., "Specific Ion Electrodes in Pollution Control," *American Laboratory,* vol. 2, July 1970.

© 2003 by Béla Lipták

8.29 Mass Spectrometers

R. C. AHLSTROM (1982, 1995) **R. A. GILBERT** (2003)

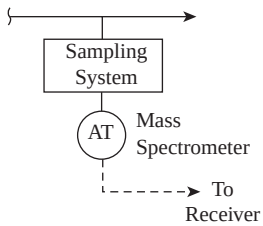

Flow Sheet Symbol

Type of Sample:	Vapor
Standard Design Pressure:	Atmospheric
Sample Temperature:	122 to 424°F (50 to 200°C); sufficient to provide vapor sample with no condensation
Ambient Temperature:	68 to 77°F (20 to 25°C)
Contacting Materials:	Inlet materials of construction designed to be compatible with sample
Auxiliary Utilities Required:	Sometimes cooling water
Cost:	$3000 to $200,000, depending on analyzer section, application complexity, and data report and collection accessories Time-of-flight section: $149,000; with specialized data acquisition systems: $175,000 Magnetic section (food processing industry): $120,000 RGA: $3500; multiple purchase: $3000 Quadrupole section: $45,000 to $90,000 Ion-trapping section: $90,000 $150,000
Inaccuracy:	±0.5% for most applications
Repeatability:	±0.2% for most applications
Cycle Time:	0.5 to 4 sec per stream, depending upon applications
Special Features:	Multicomponent readout, database of mass spectra, programmable temperature control, coupled to gas or liquid chromatography units
Partial List of Suppliers:	Ametek Process Instruments (www.ametekpi.com) Balzers Instruments (www.bi.balzers.com) Finnigan Mat Corp (www.thermo.com) Jeol (www.jeol.com) Leybold Inficon (www.leyboldinficon.com) MKS Instruments (www.mksinst.com) Perkin-Elmer Corp. (www.instruments.perkinelmer.com) Pfeiffer Vacuum (www. pfeiffer-vacuum.de) Waters Corp. (www.waters.com)

INTRODUCTION

Closed-loop computer control is a major requirement of many industrial chemical processes. Knowledge of the composition and concentration of a chemical process stream is an important element if a modern closed-loop computer control scheme is to be developed. The mass spectrometer is widely used as an analytical tool in the process industries. It provides multicomponent analysis with the accuracy, reliability, and cycle time that are necessary for closed-loop computer control

© 2003 by Béla Lipták

of a process. For example, typical instruments can sample multiple streams for concentrations of 8 to 12 components in less than 5 sec. The increased use of mass spectrometers in the process industry is the result of properly combining the sample stream, the analyzer, and the data acquisition system into a reliable working unit.

PRINCIPLE OF OPERATION

Mass spectrometers create and then separate ions of a particular atomic or molecular species by their mass-to-charge (m/e) ratios. For example, a diatomic nitrogen molecule with a mass of 28 might become a single charged ion, and it would have an m/e ratio of 28. If that diatomic molecule became a double charged ion, its m/e ratio would be 14. A mass spectrometer employs a vacuum environment in which ions are created, separated, and ultimately detected. This vacuum requirement allows collisions between the ions and molecules to be minimized. This is possible when the mean free path for the ions is very large. Typically, a vacuum in the order of 10^{-4} to 10^{-6} torr (mmHg) is required. Consequently, a mass spectrometer must include a sampling port into, as well as a vacuum pumping system that maintains the required vacuum envelope within, the spectrometer.

In general, a very small gas sample is introduced from atmospheric pressure through the inlet port into the ion generator section of the spectrometer. Sample ions are produced by the collision of rapidly moving electrons with the gas molecules to be analyzed. The electrons ionize the sample by knocking out one or more electrons from an outer orbit of a neutral sample molecule. The positive sample ions are extracted from the ion generator as fast as they are formed by means of electrostatic fields created by sets of electrodes that also accelerate and focus these ions into an ion beam. This ion beam is directed into the ion separation section of the instrument. Finally, these separate segregated ion groups are directed to an ion collector or detector, which provides an electric signal that is proportional to the number of ions in the detected group. Nonionized molecules exit the spectrometer to the atmosphere via the vacuum pumping system.

Sample Input

The sample system and sample conditioning for a mass spectrometer are similar to those used for gas chromatographs (Section 8.12). In fact, it is very common to connect a gas chromatography system to the sample input port of a mass spectrometer. In any event, vapor samples are drawn by suction into the mass spectrometer through several possible types of inlet leaks.

A sintered metal leak device is a commonly used input port because it allows a uniform molecular flow into the instrument based on the differential pressure across the sintered metal plate. Thin diaphragms made from Teflon may be used for corrosive service, and ultrafine metering valves can also be used. Also available are automatic metering valves that maintain a sample flow based on the pressure in the spectrometer's ionization chamber. While a variety of inlet leaks are available, one must be chosen that produces a stable flow of sample gas into the spectrometer and is compatible with the desired sample and the system's analyzer. Fortunately, most mass spectrometer companies provide instruments with appropriate inlet port options and offer help in making the proper input port selection.

Sample Ionization

Several methods are available for producing ionic species from the sample gas. Electron bombardment is the most popular but requires periodic filament replacement. Spark generation and optical and chemical ionization methods are also used. Atmospheric ionization mass spectrometry is available and has been shown to be applicable to a wide range of compounds. Although this approach promises to open up a wide range of new applications for mass spectrometry, most instruments currently used in process applications use vacuum environment-based systems with heated filaments. Since filament life and ease of replacement are of primary concern, most process mass spectrometers have dual-filament assemblies that allow switching from one to the other filament without any downtime. Filament replacement is then postponed until occurrence of the next scheduled preventive maintenance event.

Figure 8.29a shows the operation of a heated filament ion source. In this example, the molecules are shown entering the spectrometer from the top. After passing through a negatively charged repeller screen, these neutral molecules interact with a focused electron beam to form a variety of products, including an ion cloud that contains positive ions. These ions are pushed out of the ion generator section of the spectrometer by the repeller screen and then accelerated through an exit slit into the ion separation section of the spectrometer. The sample ions are now z-axis aligned and directed into the magnet region of the ion separation section of the instrument. The bulk of the sample molecules and any other electron impact reaction products are removed by the vacuum system.

In general, there are at least four options for the sample ionization section of a mass spectrometer: 1) an open ion source for general high-vacuum applications; 2) a closed ion source for process and gas analysis; 3) a differential ion source for running both process pressure and high-vacuum applications simultaneously; and 4) a cross-beam ion source to enhance the minimum detection level for many different gas species. As with the case of the instrument's sample inlet port, most mass spectrometer companies provide these options and offer help in making the proper ion generator selection.

Ion Separation

Although the four major sections of a mass spectrometer—the input port, the ion generator, the ion separation section, and the ion detector—are equally important, the behavior of the spectrometer is characterized by its ion separation section. There are several ion separator section options available. For

© 2003 by Béla Lipták

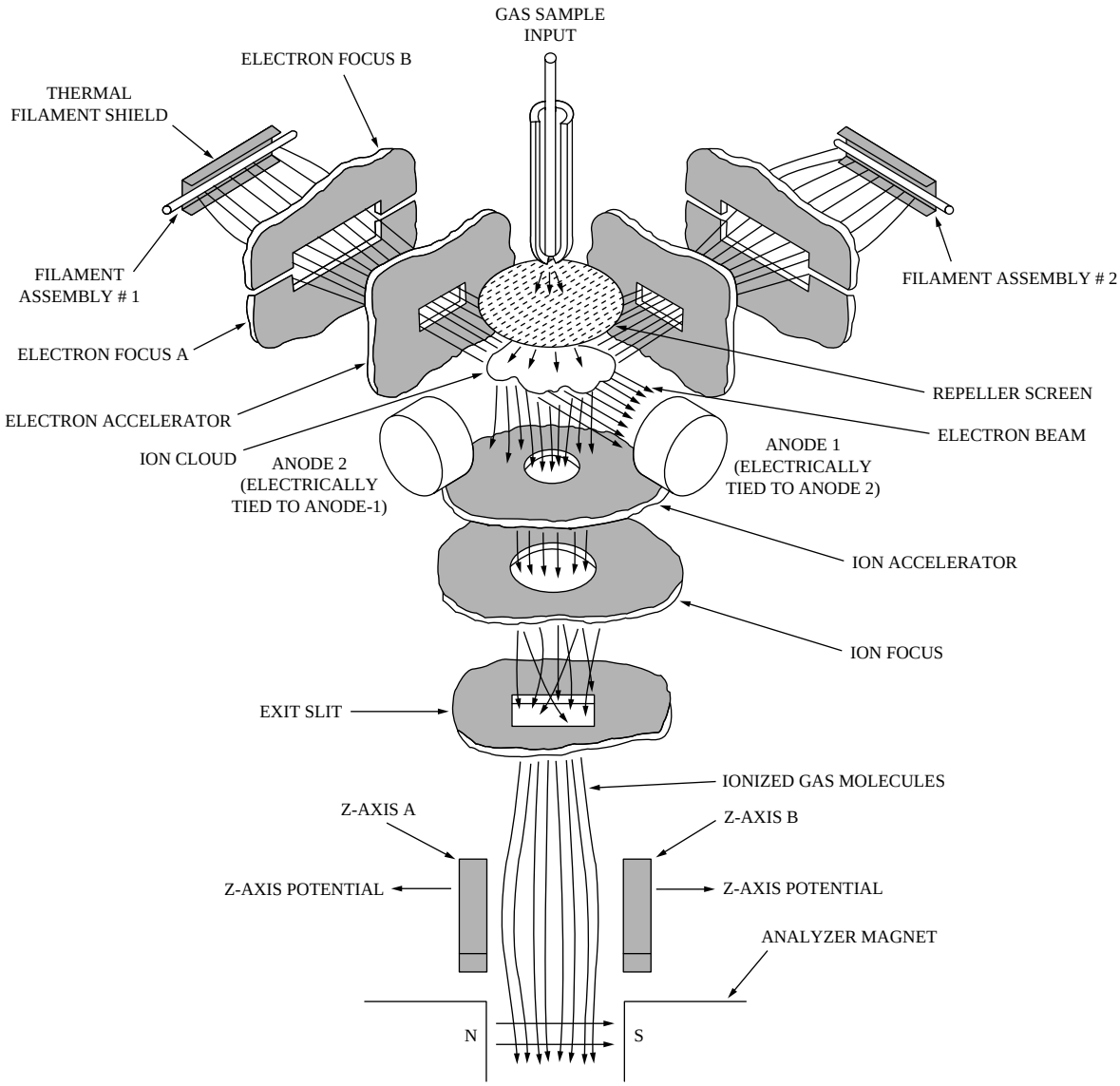

FIG. 8.29a
Ion source operation.

instrumentation and process personnel, the selected instrument design must stress simplicity, automatic operation, and reliability; require a minimum of operator attention; and still meet the analysis needs. Further, it must be serviced and maintained by personnel with minimal mass spectrometer technical expertise. The various separation options are discussed below.

Magnetic Sectors There are two types of magnetic sector instruments: fixed magnetic sector and electromagnetic-focusing sector. The fixed magnetic sector instrument utilizes a permanent magnet to produce a magnetic field at right angles to the direction of motion of the ion beam that exits the instrument's ion generation section. This normal interaction forces the ions to bend in a circular trajectory proportional to their m/e ratios.

The concept of the fixed magnetic sector ion separation process is shown in Figure 8.29b. The top section of the illustration is the sample ionization section of the instrument and succinctly summarizes all of the details provided in Figure 8.29a. The center portion of the diagram shows the fixed magnetic sector ion separation portion of the instrument. In this case, multiple collectors are employed to obviate the need for scanning, which vastly simplifies the electronic system and does not require an external programmer to select the operational parameters. For each process application, the collectors are located at a predetermined point in the instrument focal plane.

For example, if the situation required the instrument to measure the atmospheric composition of a process stream sample, the ion collectors would be placed along the magnetic sector focal plane to intercept the ion beams for nitrogen (m/e = 28), oxygen (m/e = 32), and argon (m/e = 40). This will require three of the eight possible real-time mass-to-charge ratio measurements that could be made by the instrument.

© 2003 by Béla Lipták

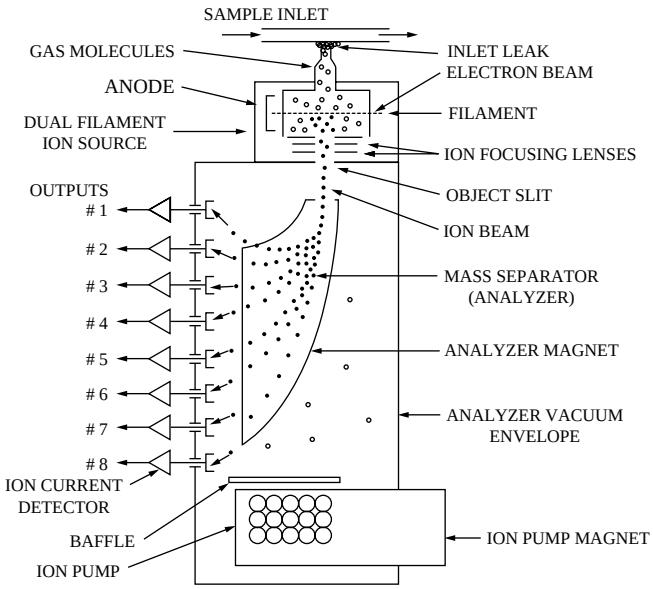

FIG. 8.29b
Fixed magnetic sector mass spectrometer operation.

With these three measurements, the output of the instrument could continuously monitor the atmosphere composition of the process stream and provide data for an appropriate control decision. In addition, there would be five additional spectrometer output channels to monitor other components of the process stream.

The concept of the electromagnetic-focusing sector ion separation process is distinctly different from the multiple collector idea shown in Figure 8.29b. The electromagnetic-focusing sector utilizes changes in either the accelerating voltage or magnetic field to focus the desired ionic species onto a single collector. When accelerating voltage is used, the ions are focused and accelerated as a beam into a magnetic field. The acceleration voltage is varied to select the ions with a particular mass. For various ionic mass selections, the product of mass and acceleration voltage is a constant. Since the multiple mass ion beam entering the magnetic field contains ions of essentially equal energy, the momentum of each ion depends upon its mass. Because the radius of curvature of the ions in the magnetic field is different for ions of different momentum, only ions corresponding to one particular mass are focused on the collector. This signal is amplified and displayed as a signal proportional to the particular concentration (partial pressure) of the gas type with that mass.

Magnetic field variation is an alternate way to make a single mass ion beam exit an electromagnetic-focusing sector in a mass spectrometer. The principal advantage of magnetic field scanning is the wider mass range achieved. Although the mass is not directly proportional to the magnetic field, circuits have been designed to provide linear spacing of masses. When changing the magnetic field, the accelerating voltage is held constant at a value that corresponds to the higher mass of interest. When magnetic field variation is used to sort sample ions, the relative heights of different mass

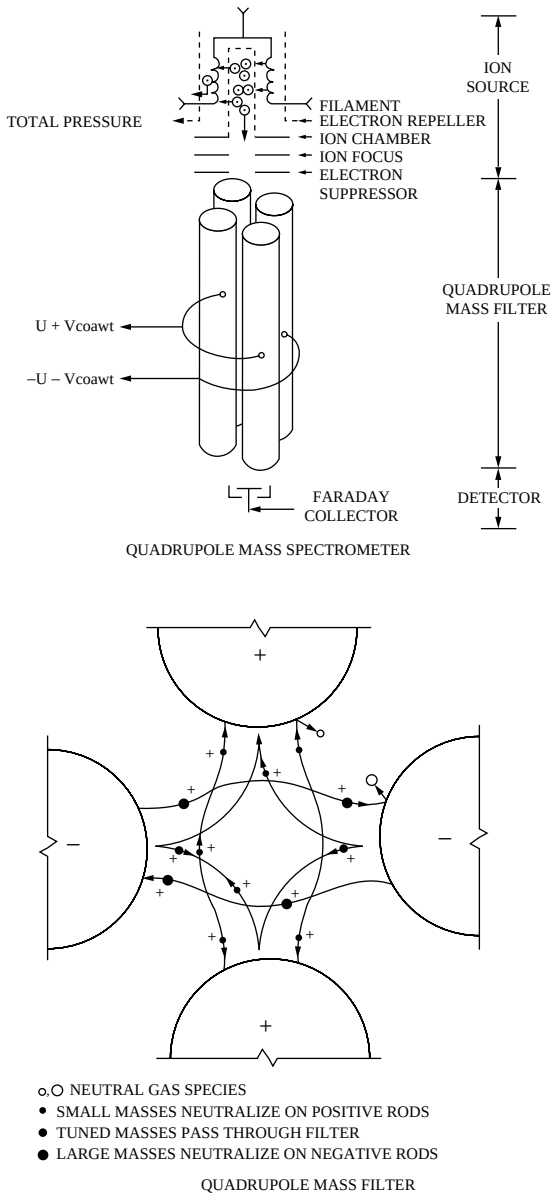

FIG. 8.29c
Top: Quadrupole mass spectrometer. Bottom: Quadrupole mass filter.

peaks do not occur in the same proportion as they do when the ion separation is accomplished by changing the accelerating voltage. In the latter case, the low-mass peaks are enhanced in both magnitude and resolution because of the more favorable accelerating voltage at which they appear. When the magnetic field is varied at an acceleration voltage corresponding to the highest mass of interest, this enhancement does not occur. Therefore, both the magnitude and resolution of mass peaks will be less.

Quadrupole Filter The use of a quadrupole mass filter to separate the sample ions that leave the ion generation section of a mass spectrometer is also possible. Figure 8.29c illustrates the operation of this type of ion separation section. Again, the top portion of the upper panel of this figure shows

© 2003 by Béla Lipták

the ion generation section of the instrument. The sample ions exit this ion source through the electron suppressor and then enter the quadrupole filter region of the instrument. A quadrupole m/e filter consists of four high-precision crafted cylindrical rods located precisely in an orthogonal array. The m/e-separated ion groups exit the quadrupole separation section and strike a single detector, which produces a signal proportional to the number of ions with the selected m/e ratio.

The lower panel of Figure 8.29c provides a top-down view of the travel path for ions entering the quadrupole ion separation portion of the instrument. As an ion moves at uniform speed among these rods, it undergoes complex oscillatory spiral motion transverse to its travel axis. The actual ion motion is considerably more complex than shown, and the path lines in the figure only represent outer boundaries of particle motion. This motion pattern is created because diametrically opposing rod pairs are electronically connected to also form positive and negative rod pairs. The positive pair has a radio frequency (RF) voltage superimposed on a positive DC voltage, while the negative pair has a negative DC and RF voltage that is 180° out of phase with the positive pair. The varying electromagnetic field that results creates an environment that separates the ions by their mass-to-charge ratio.

For a given set of voltages, all ions below a given mass interact with the positive set of rods. These low-mass ions are neutralized and removed from the ion beam, while higher-mass ions remain in the ion beam. In turn, the negative set of rods interacts, neutralizes, and removes ions above a given mass value. The lower-mass ions remain in the ion beam and continue traversing the quadrupole section. By adjusting the RF-to-DC ratio, an ion pass-band can be created so that only ions with a specific narrow m/e ratio can exit the quadrupole ion separation section of the instrument. Under high-resolution conditions, the passed ions barely miss the rod pairs at the extremes of their transverse oscillatory motion, and the mass range that is allowed to exit the quadrupole filter is very narrow. A unique property of the quadrupole mass filter is the fact that the number of m/e ions that are passed is directly proportional to the voltage applied to the rods. Thus, by changing the voltages, various ionic masses of interest are allowed to pass through to the collector where they are measured.

Ion-Trapping Section Figure 8.29d illustrates an ion-trap mass spectrometer that uses an interesting twist for its ion separation section. In this case, the geometry of the section plus the RF voltages applied combine to create an environment in which the ions undergo stable oscillations and remain trapped in that environment. Three electrodes, two end-cap electrodes that normally are at ground potential, and between them a ring electrode to which an RF mega-Hertz voltage is applied, generate the quadrupole electric field that can trap the sample ions.

The ion separation is accomplished by introducing a change in operating voltage. This alters the quadrupole electric field and allows trapped ions of a particular mass-to-charge ratio to adopt new but unstable trajectories. Thus, if the amplitude of the RF voltage applied to the ring electrode is systematically varied, ions of successively increasing m/e ratios are made to adopt unstable trajectories and to exit the ion trap, where they can be detected using an externally mounted electron multiplier.

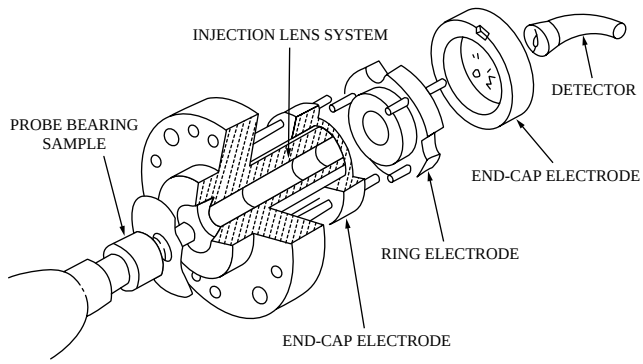

FIG. 8.29d
Ion-trap mass spectrometer.

Time-of-Flight Filter In time-of-flight mass spectrometers, the ionized sample is subjected to a negative-polarity-accelerating field, and then the ion beam is directed into a time-of-flight drift region. This drift region is the ion separation section of the spectrometer. The lighter ions travel faster through this region than the heavier ions, producing mass separation by the amount of time it takes for the ions to traverse this drift tube.

To accomplish this type of mass separation, the ionized sample is introduced in discrete pulses of 20,000 to 35,000 pulses per second. On each cycle the sample ions enter the flight tube (drift region) where the separation by mass values is accomplished. Upon exiting, the ions are then converted to electrons and amplified using an electron multiplier. The final amplified signal is detected by the detector's anode and fed to a suitable data acquisition system. Figure 8.29e illustrates the operational concepts for time-of-flight spectroscopy.

Ion Detection

It is important to understand that the ion collectors are not selective detectors. They will provide a signal if an ion with the appropriate mass-to-charge ratio emerges from the ion separator and strikes the detector surface. Thus, for this example, the conclusion that the atmospheric composition of the process stream is being monitored depends on the assumption that only ions created from the nitrogen, oxygen, and argon in air contribute to the collector signals at m/e ratios of 28, 32, and 40, respectively. If the process gas stream has other sources for these atoms, the conclusion is not immediately valid.

© 2003 by Béla Lipták

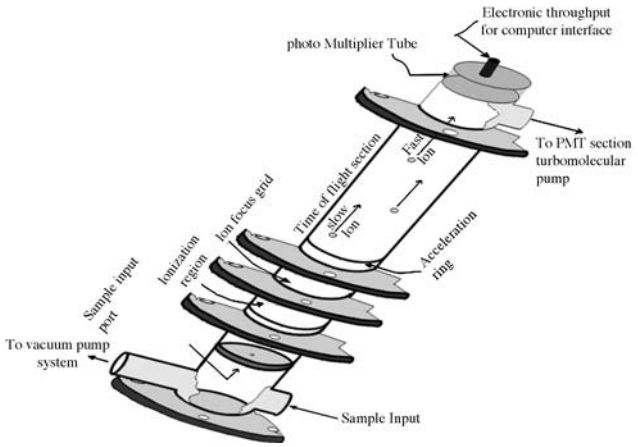

Fig. 8.29e
Time-of-flight mass spectrometer.

Ion detection errors develop for a variety of reasons. Errors that originate in the spectrometer's ion generation source or because of changes in conductance of the inlet leak are common. For the process stream atmospheric composition example, the three m/e ion collector outputs would be electronically scaled to create equal sensitivities for each measurement and then summed to create an analog of the sampled atmosphere. This error adjustment scheme is accomplished within the instrument with analog or digital circuitry. In either case, the sum is then compared to a fixed reference, and if it is properly calibrated, no error is created by this comparison. If a hypothetical drift is introduced, an error correction signal is created and is fed back to each channel through the instrument's gain adjust elements. The gain gives an equal percentage change in each channel and drives the error to zero. The effectiveness of this technique for stabilizing calibration over extended periods has been proven in process applications. Error adjustments are accomplished by amplifier feedback circuits or digital correction techniques.

Vacuum Environment

To maintain the needed vacuum level within a mass spectrometer, it is common to employ two vacuum pumps in series. With this pump arrangement, the removal of molecules from the instrument's vacuum environment becomes a two-stage pumping process. At the high-vacuum stage, the molecules enter the pumping system at a pressure of 1×10^{-5} or 1×10^{-6} torr and are compressed to a pressure of 1×10^{-2} torr. At this low-vacuum stage of the pumping process, the molecules enter the second pump and are compressed from 1×10^{-2} torr to atmospheric pressure. The turbomolecular pump is a common selection for the high-vacuum pumping stage, while a roots blower or a rotary vane pump is a candidate for the low-vacuum-to-atmosphere pumping stage. Pump choice depends on required environmental conditions within the process being monitored. The pressure at both vacuum stages is monitored, and the vacuum sensor signals are used for diagnostic and control purposes. Vacuum sensors are discussed in Section 5.14.

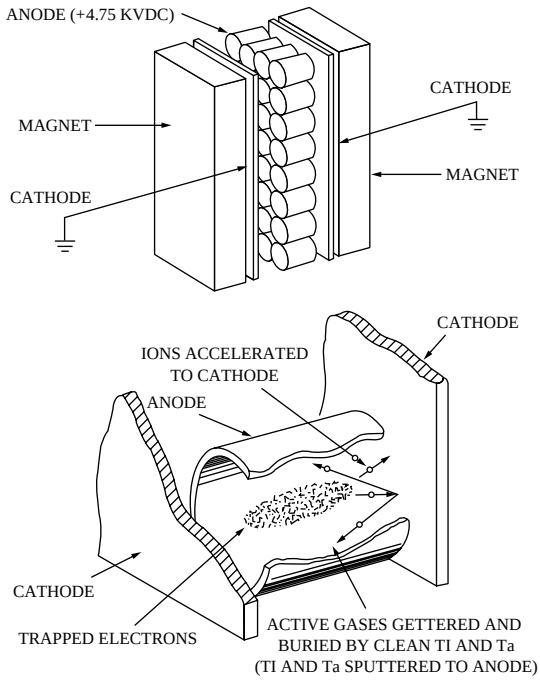

FIG. 8.29f
Ion pump operation.

For the spectrometer example presented within this section, an ion pump has been selected for the high-vacuum pumping stage. This choice is representative of an alternative pump type and is essentially a passive device that pumps by a combination of chemical gathering and physical burial. Like the cryopump, it does not require an additional pump connected in series; however, most systems include a parallel pumping turbomolecular pump or roots blower to lower the overall system-pumping burden.

Figure 8.28f shows a typical ion pump. An electric field is established between the anode structure and the two cathodes, and a magnetic field is created by a permanent magnet. This creates a trapped electron cloud that continuously ionizes the neutral gas in the pump. The ions are accelerated out of the anode and impinge upon the cathode surface where they sputter cathode material. The tantalum and titanium cathode materials coat the pump structure. These two materials are very active getters and chemically combine with most of the ions present to remove them from the vacuum environment. Inerts are removed by actual burial under the sputtered material or by direct implantation.

Data Reduction and Presentation

Today's mass spectrometers are usually packaged with a complete computer-based data reduction system. In fact, for on-line industrial applications, there may be too many data manipulation options too easily available to shift operators. In any event, the manufacturers will be able to initially help design

© 2003 by Béla Lipták

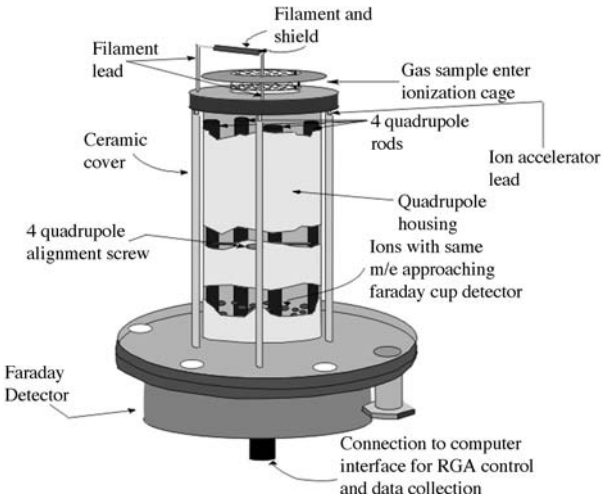

FIG. 8.29g
RGA operational concept.

the spectrometer output capabilities to meet your stated needs. In addition, there are an ample number of third-party venders that can provide compatible software to meet the needs appropriate to any specific and special application.

RESIDUAL GAS ANALYZERS

The residual gas analyzer (RGA) represents a major advancement in mass spectroscopy with respect to industrial applications. Over the last 10 years, this technology has been refined and is now a cost-effective way to meet the needs of several process applications. Figure 8.29g provides a conceptual view of the operation of an RGA. The technology is fundamentally a small quadrupole mass spectrometer that provides m/e resolutions that are suitable for certain types of process environments. In this illustration, the outer case to establish a vacuum environment is not shown. The gas sample enters the ionization cage from the right and is ionized by electrons emitted from a hot filament. The ions are accelerated into the quadrupole section and then separated by their mass-to-charge ratio. Figure 8.29c provides more detail about a quadrupole mass filter. Similar m/e charge ratios enter the detector at the same time and are counted and displayed as an intensity signal at the specified m/e.

The integrated semiconductor and the thin-film industries are two examples for extensive industrial application for RGAs. In both cases, the RGA serves as a diagnostic tool for monitoring the status of the process equipment vacuum environment and the characterization of the process within that vacuum environment. The RGA is almost always added into sputter tool clusters and other unit operations within these two industries. Although the RGA can also be inserted within control loops for semiconductor and thin-film manufacturing, to date it does not have widespread use in this manner.

CONCLUSIONS

Mass spectrometers are typically classified by the technology they use to separate the ionic masses into clusters. Mass spectrometer examples include the quadrupole mass spectrometer, the magnetic sector mass spectrometer, the time-of-flight mass spectrometer, and the ion-trap mass spectrometer. The residual gas analyzer is an example of a quadrupole mass spectrometer.

For mass spectrometer application to the process industry, the requirements of a dedicated, on-line analytical instrument might be stated as follows. The instrument is expected to perform a specific analytical task, on a continuous basis, for extended periods. It must exhibit long-term stability and accuracy while operating over its environmental range. An advantage of quadrupole instruments over electromagnetic-focusing ones is that the fields required to focus a particular mass can be changed very rapidly ($<10^{-3}$ sec), which is especially valuable for computer-controlled measurements that require multiple-ion monitoring. The quadrupole ion trap is a mass spectrometer that has a broad mass range and provides molecular weight and structural information on biopolymers. It also has the greatest sensitivity of all mass spectrometers. The somewhat lower m/e resolution of the RGA is an acceptable trade-off when it is in situations where pressure, process stream disturbances because of contamination, and ease of assembly are the focus of attention.

Bibliography

Ahlstrom, R. C., Jr., and Shaver, F. A., "The Development and Application of an On-Line Process Mass Spectrometer," 31st Annual Symposium on Instrumentation for the Process Industry, College Station, TX, 1976.

Ahlstrom, R. C., Jr. "Maintenance of On-Line Mass Spectrometers," *Instrument Maintenance Management*, Vol. 13, 1979.

Ahlstrom, R. C., Jr. and Meppen, C. E., "System and Method for Providing a Vapor Phase Sample for Analysis," U.S. Patent 4,272,481, June 9, 1981.

Cessna, G. D., "Process Mass Spectrometry: History, Fundamentals and Applications," ISA Conference, Houston, TX, October 1992.

Cook, R. G., McLuskey, S. A., and Kaiser, R. E., "Ion Trap Mass Spectroscopy," *Chemical and Engineering News*, American Institute of Engineers: New York, March 25, 1991.

Davis, R. and Frearson, M., *Mass Spectrometry*, New York: Marcel Dekker, 1987.

Dearth, M. A., "Evaluation of a Commercial Mass Spectrometer for Its Potential to Measure Auto Exhaust Constituents in Real Time," *Industrial Engineering Chemical Research*, 38, 2002–2209, 1999.

Encyclopedia of Spectroscopy and Spectrometry, New York: Academic Press, 2000.

Ewing, G. W., *Instrumentation Methods of Chemical Analysis*, New York: McGraw-Hill, 1960.

Gas Chromatography and Mass Spectrometry: A Practical Guide, New York: Academic Press, 1996.

Inorganic Mass Spectrometry: Fundamentals and Applications, New York: Marcel Dekker, 2000.

Johnson, R. C., Koch, K., and Cook, R. G., "On-Line Monitoring of Reactions of Epichlorohydrin in Water Using Liquid Membrane Introduction Mass Spectrometry," *Industrial Engineering Chemical Research*, 38, 343–351, 1999.

© 2003 by Béla Lipták

Krieger, Z., "Application of Mass Spectrometry," ISA/93 Technical Conference, Chicago, September 19–24, 1993.

Leone, S. R., Alstrin, A. L., Strupp, P. G., and Smilgys, R. V., "Laser Gas Ionization Technique Monitors MBE Crystal Growth," *Laser Focus World*, July 1993, p. 65.

Lewis, G., "Mass Spectrometers Move On-Line," *InTech*, December 1989.

McLafferty, F. W., *Interpretation of Mass Spectra*, Mill Valley, CA: University Science Books, 1980.

Lochte-Hltgreven, W., *Plasma Diagnostics*, American Vacuum Society Classics, American Institute of Physics Press: New York, 1995.

Plasma Source Mass Spectrometry: New Developments and Applications, Cambridge, U.K.: Royal Society of Chemistry, 1999.

Robertson, A. J. B., *Mass Spectrometry*, New York: John Wiley & Sons, 1954.

Weiss, M. D., "Gas Chromatography vs. Mass Spectrometers On-Line," *Control Engineering*, September 1977.

© 2003 by Béla Lipták

8.30 Mercury in Ambient Air

D. J. SIBBETT (1974, 1982) **B. G. LIPTÁK** (1995) **R. S. SALTZMAN** (2003)

Methods of Detection:	A. Ultraviolet, flameless atomic absorption B. Atomic absorption spectrophotometer C. Gold-film sensor D. Colorimetric titration E. Gas chromatography F. Atomic fluorescence G. Neutron activation
Regulatory Levels for Emissions:	100, 50, 10, and perhaps 5 $\mu g/m^3$
Range, in Ambient Air:	1 to 200 ng/m^3
Ranges of Analyzers:	A. 0 to 400 volumetric ppb B. 0 to 45 or 0 to 75 $\mu g/m^3$ C. 0 to 2 mg/m^3
Sensitivity:	A. 1.0 ng/m^3 is about the best attainable B. 0.1 $\mu g/m^3$ C. 0.003 mg/m^3 F. 0.1 ppm in liquid impinger sample
Inaccuracy:	A. 2% on direct measurement, 10% with concentrators C. 5% at 0.1 mg/m^3
Costs:	A. Laboratory analyzer alone costs about $25,000; process analyzer alone costs about $30,000; an integrated sampler–detector system costs about $45,000 or more B. $100,000 and up C. Battery-operated, portable gold-film sensor with small flow pump costs $5000
Partial List of Suppliers:	(For a more complete list of suppliers of gas chromatographs, see Section 8.12; for atomic absorption analyzer suppliers, see Section 8.22; for ultraviolet analyzers, see Section 8.61; and for autotitrators, see Section 8.66.) ABB (A) (www.abb.com/analytical) AMETEK, Process and Analytical Instruments Co. (A, C) (www.ametekpi.com) Aurora Instruments (www.aurora-instr.com) Bacharach Inc. (www.bacharach-inc.com) Brucks Rand LLC (www.brooksrand.com) Buck Scientific (www.bucksci.com) Cetac (www.cetac.com) Cole-Parmer (www.coleparmer.com) Davis Inotek Instr. (www.inotek.com) EcoChem Analytics (www.ecochem.biz) Fisher Scientific (www.fishersci.com) LECO Corp. (www.leco.com) Leeman Labs Inc. (www.leemanlabs.com) Mercury Instr. GmbH (www.mercury-instruments.de) Milestone (www.milestonesc.com)

© 2003 by Béla Lipták

Perkin-Elmer Corp. (A, B) (www.instruments.perkinelmer.com)
P.S. Analytical (www.psanalytical.com)
Rigaku MSC (www.rigakumsc.com)
Roentec GmbH (www.roentec.de)
Shimadza Scientific Instruments (A,B)
Sick (A) (www.sickmahaihak.com)
Tekran Inc. (www.tekran.com)
Thermo Automation Syst. (www.thermo.com)

INTRODUCTION

Because the mercury concentration of interest in ambient air is in the range of nanograms per cubic meter (ng/m^3), no direct method of analysis exists and all measurements require the use of concentrators in sampling systems. Therefore, this section will start with descriptions of the various sampling and concentrator designs.

Instruments used in the measurement of mercury in air or gas samples are covered in other sections of this handbook: chromatographs in Section 8.12, atomic absorption spectrophotometers in Section 8.22, ultraviolet analyzers in Section 8.61, and autotitrators in Section 8.66. Therefore, the treatment of these analyzers is not very detailed here.

Air saturated with mercury will contain between 4 and 100 mg/m^3 of mercury in the temperature range between 45 and 110°F (7 and 43°C). Since saturation is not even approached under normal circumstances when the air is moving, sensitive analytical and sampling methods are needed when data are required on the actual ambient levels of mercury. For practical use, the methods employed must be relatively insensitive to interference and be otherwise appropriate for the collection of data under a wide range of operating conditions. For regulatory purposes, related to emissions, three or four levels of sensitivity are of importance: 100, 50, 10, and perhaps 5 μg/m^3 of mercury in the air. Accuracy within ±10% at these levels is required. However, ambient air monitoring requires the ability to determine levels in the 1 to 200 mg/m^3 range.

Sample Collection and Concentration

Collection of mercury samples for accurate determination of concentrations found at ambient conditions or in industrial plants requires that:

1. The size of the sample taken must be adequate to satisfy the sensitivity threshold requirements of the analytical technique utilized.
2. The rate of sampling must be controlled so that efficient collection is achieved.
3. The sampling interval selected must be appropriate for the required monitoring function.
4. The collection device or procedure must be compatible in capacity and chemical reactivity of material components with the levels and properties of mercury and mercury compounds to be sampled.
5. Effects of potential interference must be avoided.
6. Elapsed time between collection and analysis must be minimized in order to avoid losses.
7. It must be possible to evaluate all unknown factors in collection and analysis by using the appropriate calibration procedures.

In the sampling of mercury and its compounds from the air, two basic procedures are available. These procedures utilize either the chemical reactivity of the sampled components in various aqueous media or the extraordinarily efficient extraction (amalgamation) of mercury from air by the noble metals.

In the latter case, reduction of mercury compounds to elemental mercury is required before the sampling process is carried out. Currently, a wet chemical procedure for sampling is recommended by the Environmental Protection Agency. This procedure requires considerable labor and upkeep to perform effectively.

Impinger Collection Methods

In conjunction with the publication of the National Emission Standards for Hazardous Air Pollutants,[1] the Environmental Protection Agency has published two methods for sampling and analyzing mercury in gaseous and particulate emissions. The methods are similar with the exception that particulates must be sampled isokinetically, whereas gaseous samples are passed through filters to remove particles. This latter procedure requires equilibration of the filter prior to generation of accurate data at low mercury levels.

In principle, samples are drawn through acidic aqueous iodine monochloride solutions utilizing stringent controls over flow rates, acidity, and other process variables. This procedure gives excellent recovery of organic mercury compounds and of mercury vapor. Samples obtained with this procedure may be stored.

Particulate Sampling Figure 8.30a shows the sampling train utilized for particulate and vapor samples. It consists of a Pyrex-lined, heated probe section containing a thermocouple for temperature measurement and a pair of pitot tubes and a manometer for gas flow measurement. This section is followed by five impingers of the Smith–Greenburg type placed in an ice bath and a filter for particle removal prior to passage of the gases through the two final absorber stations.

© 2003 by Béla Lipták

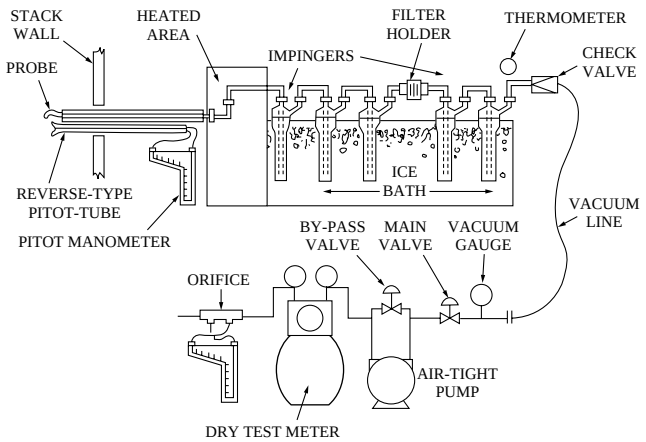

FIG. 8.30a
Particulate-sampling train.

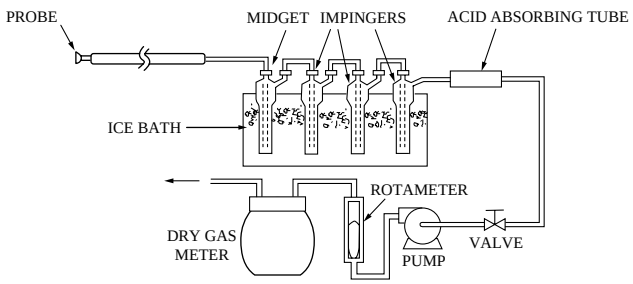

FIG. 8.30b
Vapor-sampling train.

These components are followed by miscellaneous components for control and calibration of the sample airflow.

For sampling particulates, the initial rate of gas flow is 2 scfh (57 slph). Flow should be maintained at a rate proportional to the flow through the stack sampled.

Vapor Sampling Figure 8.30b shows a simpler technique used for sampling of vapors without particulates. In this method, particulates are removed by a filter, at the inlet into the absorption train. Samples obtained by this procedure may be analyzed by a procedure utilizing a flameless atomic absorption spectrophotometer, which has been accepted by the Environmental Protection Agency for investigations.

A number of other collection procedures employing impingers have been examined. These utilize water, ethyl alcohol, isopropyl alcohol, potassium permanganate–sulfuric acid, potassium permanganate–nitric acid, or iodine–potassium iodine. However, for effective collection of alkyl mercury compounds, acidic iodine monochloride solutions are preferable.

Amalgamation on Wettable Metals

A number of less laborious methods of sampling mercury vapor, compounds, and particulates have been developed that utilize absorption (amalgamation) of vapor on silver, gold, and alloys of these materials. In order to sample particulates



FIG. 8.30c
Absorption tube mercury collection device.

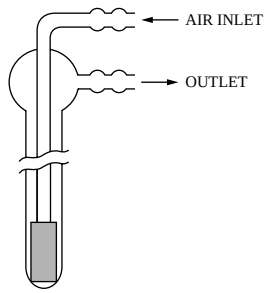

FIG. 8.30d
Mercury gas-sampling tube.

and compounds of mercury, the trapping procedure must be preceded by a decomposition step. A catalytic process that achieves this objective is described later.

Examples of procedures for collecting elemental mercury vapor include the method shown in Figure 8.30c, which shows a simple absorption tube filled with gold or silver wool. The tube may be sized to satisfy any specific parameters of the sampled gas stream. Fine wire may also be used as packing for flow rates under 50 l/min, and mercury vapor removal can be made quantitative. Gold materials are required for gases containing hydrogen sulfide or sulfur dioxide.

When a simple absorption tube of this type is employed, the mercury vapor collected may be released for analysis in a flameless atomic absorption spectrometer (AAS) by utilizing an induction furnace (Section 8.22). In this procedure, extensively used by the U.S. Geological Survey, a continuously flowing airstream is used to pass the pulse of the mercury vapor into the AAS cell. This pulse is generated during the heating in the furnace.

Sampling Tubes The Canadian Department of the Environment employs a versatile method of sampling of gas streams. It uses a packing, which consists of finely woven silver mesh (Figure 8.30d). One version of the sampling tube is 5 in. (125 mm) high and utilizes a $\frac{1}{4}$ in. (6-mm)-inner-diameter Pyrex tubing. Separation between the inner and outer tube is $\frac{3}{64}$ in. (0.1 mm). In order for this collection procedure to function effectively, relatively low airflow rates through the wire mesh must be used. Sampling rates of 1 to 5 l/min have been employed, but long sampling periods are required to make measurements at low air concentrations.

Figure 8.30e shows the schematics of a collection device, which is contained in an integrated mercury analyzer. In the collection section of this device, air at rates from 0.03 to 7 scfm (1 to 200 l/min) is passed through a grid containing 160 ft (48 m) of 22-gauge wire arranged in a carefully spaced annulus. Mercury vapor is desorbed by direct passage of

© 2003 by Béla Lipták

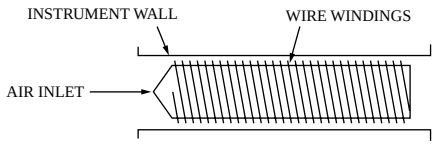

FIG. 8.30e
Mercury collection device.

electrical current through the wire. Analysis is achieved by the flameless atomic absorption method in a photometer.

Activated Absorption

Use of a silver on a charcoal absorbent is highly efficient and may be used to remove mercury vapor from many gas streams. Extraction of the mercury vapor as a concentrated pulse for analysis, however, is relatively difficult. Induction heating is required to maximize the vapor concentration. Trapping is also possible with iodine-activated charcoal and mineral wool. Regeneration of these materials for repeated use presents difficulties not yet resolved.

Conversion of Mercury Vapors

In order to analyze for total mercury including particulates and vapor, reduction of compounds such as mercuric chloride, mercuric sulfide, dimethyl and diethyl mercury, pesticides, and fungicides to the elemental form must be achieved. Three techniques are in use: 1) thermal decomposition at 1500 to 2000°F (816 to 1093°C); 2) catalytic reduction or disproportionation, usually at 1200 to 1300°F (648 to 704°C) over materials such as cupric oxides; and 3) chemical conversion in solutions such as acidic iodine monochloride. Commercial equipment is available, which may be used in conjunction with sampling and analysis instrumentation.

Methods of Detection

No direct analytical method is capable of attaining accurate measurements in the range required for ambient air without the use of a concentrator, discussed earlier.

Ultraviolet Light Absorption

A wide variety of methods have been developed to measure airborne mercury-containing materials in the atmosphere based on the strong absorption of ultraviolet light at 253.7 nm by an elemental mercury vapor. Since many other compounds absorb light in this range, although they do that at a much higher concentration than does mercury, some method of separating out these interferences is needed when low levels of mercury are to be measured.

Atomic Absorption Spectrophotometry Mercury is conveniently analyzed by atomic absorption techniques because the elemental vapor exists in atomic form under normal ambient conditions. Thus, when a cloud of mercury vapor is

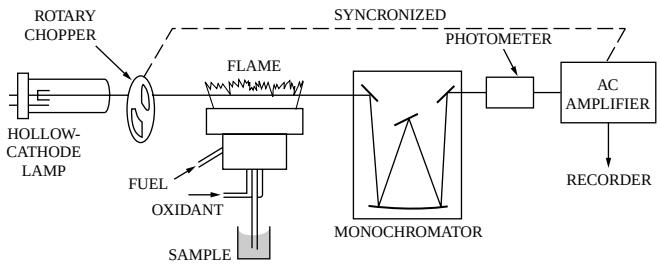

FIG. 8.30f
Atomic absorption spectrophotometer.

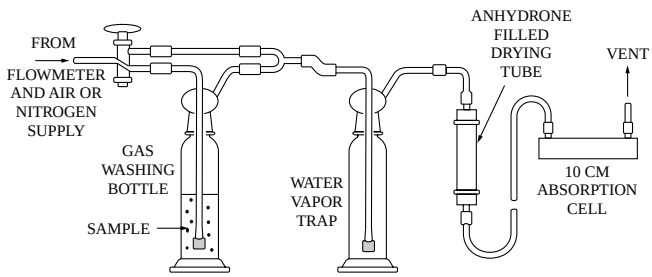

FIG. 8.30g
Apparatus for flameless atomic absorption.

irradiated at an appropriate wavelength, mercury atoms absorb a portion of the energy of the beam.

In the standard atomic absorption technique, liquid samples are aspirated into an acetylene air flame where the atomic mercury is released and the absorption of light at 253.7 nm is measured by a spectrophotomultiplier (Figure 8.30f). The sensitivity of 0.01 μg of mercury per milliliter of sample is readily attained by this procedure. A continuous series of calibration checks are required for maximal precision and accuracy.

Flameless Atomic Absorption Spectroscopy The burner–aspirator and flame indicated in the schematic of the conventional AAS (Figure 8.30f) may be replaced by a quartz-windowed glass cell, and the sample may be generated by reducing an aqueous sample of mercury compounds to elemental mercury.

Figure 8.30g shows the apparatus that may be used in conjunction with an AAS. In this procedure, a sample collected by utilizing a separate collection train is pipetted into the gas washing bottle. To this is added a solution of a reducing agent such as hydroxylamine sulfate or stannous chloride, and the bottle is closed.

With clean air supplied at a rate of 1.3 l/min, aeration is commenced and continued until a maximum peak height readout is obtained on the recorder. By calibration against acidic mercuric chloride standard solutions, the peak heights obtained with unknown samples can be compared with the calibration curve for direct determination of the mercuric ion concentration. This value may be converted to the gas phase concentration of mercury.

© 2003 by Béla Lipták

A number of commercial units are available that use the principle of flameless atomic absorption spectroscopy for determination of mercury. Some designs require that samples be taken by use of a liquid-sampling train and transported to the instrument, while others accept gas samples.

Other devices based on the use of absorption of radiation at 253.7 nm have been developed by Barringer Research and by Williston and Morris (Cordero Mining Company).[2] The Barringer method takes advantage of the pressure broadening of the mercury emission lines to minimize interference caused by other compounds.

Colorimetric Methods

Dithizone In this method, air is drawn through an acidic solution (10% H_2SO_4) of potassium permanganate (4 g/100 ml), where the elemental mercury, inorganic mercury compounds, and the readily decomposable mercury–organic compounds are converted to mercuric ions.

Methyl mercury compounds require the use of permanganate at 212°F (100°C). The determination of mercury may be concluded colorimetrically whence the sample is titrated with dithizone and compared with the colors developed by standards. A spectrophotometer may also be used for quantitative comparison between the color developed by test samples and those of controlled standard quantities of mercury.

In the method developed by the American Conference of Government Industrial Hygienists, the sample is collected from the air by passing it through an aqueous solution of iodine (0.25%) and potassium iodine (3%). Mercury is extracted from a buffered solution (ammonium citrate, hydroxylamine hydrochloride, and phenol red at pH 8.5) with dithizone in chloroform (20 mg of dithizone/5 ml) until all color is removed. After washing the chloroform phase, the mercury is extracted into acidic (0.1 *N* HCL) potassium bromide (8%), shaken with a chloroform solution of 10 mg/l of dithizone, and filtered through cotton into a colorimeter cell. The optical density at 485 mm is used to determine the mercury. Calibration is carried out with mercuric chloride.

The dithizone method is relatively insensitive, requiring the use of large samples (about 10 μg are required) when the levels of mercury are low. It also requires considerable care on the part of the chemist to avoid the loss of organic mercury compounds.

Selenium Sulfide and Others Active selenium sulfide applied to paper as a coating may be used to detect the presence of elemental mercury vapor. The paper develops a black color on exposure to air containing mercury. The degree of blackening is a function of the concentration of mercury and the times of exposure. Quantitation may be made with a simple densitometer.

Mercury can also be detected with copper, iodine paper, selenium paper, and gold chloride on silica gel. These methods appear to have a limiting sensitivity in the 500 to 1000 $\mu g/m^3$ range and a measurement error of ±5%.

Gas Chromatography for Mercury Organics

Organic mercurials can be determined at levels of approximately 1 ppb by gas chromatographic methods. Samples must be extracted into benzene and injected into a gas chromatographic column (Carbowax 20M on Chromasorb W) operating at 356°F (180°C), which separates methyl mercury, ethyl mercury, methozyethyl mercury, phenyl mercury, and dimethyl mercury. Quantitation is obtained with an electron capture detector. Dimethyl mercury requires conversion into methyl mercury halide for analysis, however. Precision is reported to be about 12%, with 30% reliability.

Atomic Fluorescence Spectroscopy

Samples collected by any of the liquid impinger techniques (Figures 8.30a and 8.30b) may be analyzed by use of atomic fluorescence flame spectrophotometric methods. Figure 8.30h provides a schematic diagram of a typical fluorescence spectrophotometer and of some typical calibration data. Figure 8.30i shows an actual x-ray fluorescence spectrometer. A mercury concentration of 0.1 ppm in a collection fluid is the detection limit of this method.

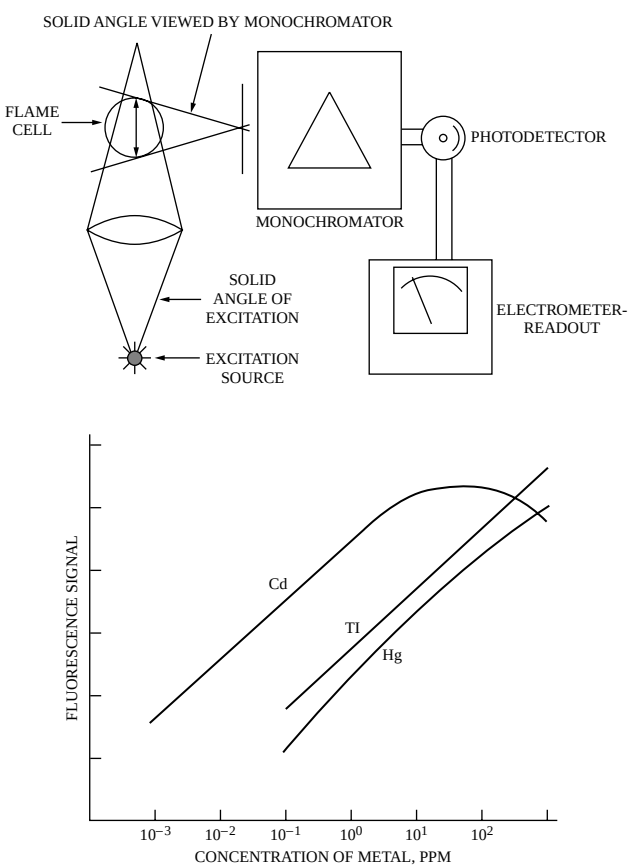

FIG. 8.30h
Atomic fluorescence spectrophotometer.

© 2003 by Béla Lipták

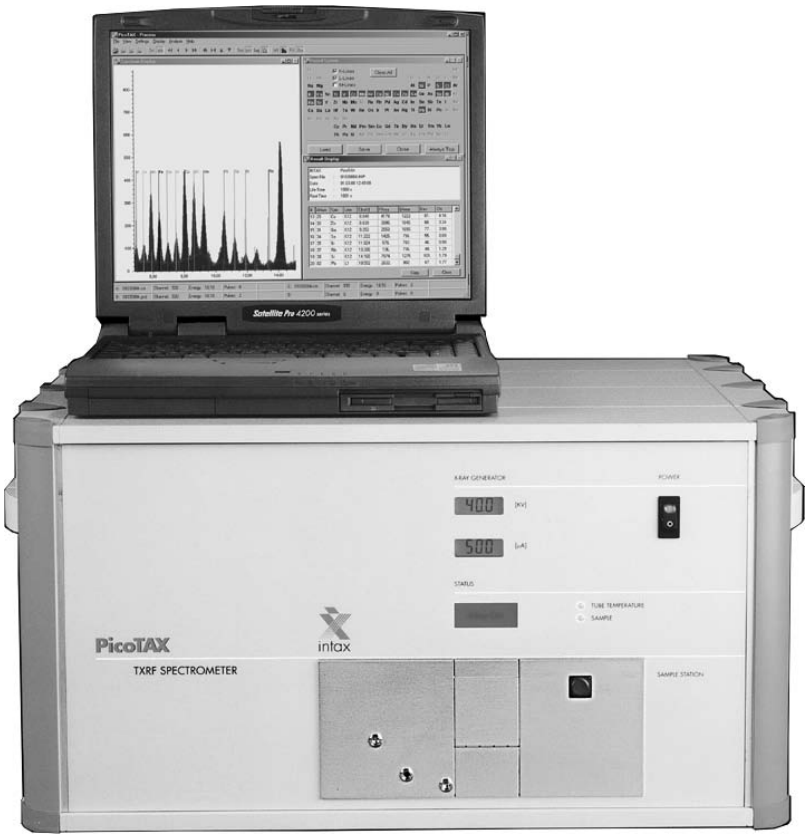

FIG. 8.30i
X-ray fluorescence spectrometer. (Courtesy of Roentec GmbH, Berlin, Germany.)

Other Analytical Procedures

A radiochemical procedure for the determination of mercury vapor has been developed based on the isotopic exchange that takes place when air samples containing mercury are passed through a solution of Hg^{203} mercuric acetate. The method potentially has good sensitivity but requires precautions, which are normal in handling radioisotopes.

Mercury that has been extracted from the air may be determined utilizing a neutron activation procedure. The measurement error and precision of this method is in the range of ±2%.

References

1. *Federal Register,* Vol. 36, No. 234, December 7, 1971, pp. 23, 250.
2. Williston, S. H. and Morris, M. H., U.S. Patent 3,173,016, March 9, 1965; Williston, S. H., U.S. Patent 3,178,572, April 13, 1965.

Bibliography

Control Staff, "Mysteries of Gold Film Sensors to be Studied," *Control,* January 1989.

Denny, R. and Sinclair, R., *Visible and Ultraviolet Spectroscopy,* New York: John Wiley & Sons, 1987.

Ewing, G. W., Ed., *Instrumental Methods of Chemical Analysis,* New York: McGraw-Hill, 1981.

Guilbault, G. G., Ed., *Fluorescence,* New York: Marcel Dekker, 1967.

Hughes, T. J., *The Finite Element Method,* Dover Publishers, 2000.

Kwon, Y. W., *The Finite Element Method Using MATLAB,* Boca Raton, FL: CRC Press, 2000.

Leithe, W., *The Analysis of Air Pollutants,* Ann Arbor, MI: Ann Arbor Science Publishers, latest edition.

"Mercury in Your Environment," www.rigakumsn.com/Hg/Hg-articles.shtml.

Meyers, R. A., Ed., Encyclopedia of Analytical Chemistry Instrumentation and Applications, U.K.: John Wiley & Sons, 1999

"Portable High-Performance Mercury Analyzer for Field Use Mercury Sniffer," *The Rigaku Journal,* Vol. 15, 1998.

Seiler, H. and Sigel, H., *Handbook on Toxicity of Inorganic Compounds,* New York: Marcel Dekker, 1988.

Smith, D. et al., *EPA's Sampling and Analysis Methods Database,* Chelsea, MI: Lewis Publishers, 1990.

Vaughn, W. W., "A Simple Mercury Vapor Detection for Geochemical Prospecting," Geological Survey Circular 540, U.S. Department of the Interior, 1967.

© 2003 by Béla Lipták

8.31 Mercury in Water

S. NISHI (1974, 1982) **B. G. LIPTÁK** (1995, 2003)

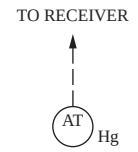

Flow Sheet Symbol

Pretreatment of Sample: Wet oxidation is used for the detection of the total mercury level, and solvent extraction is used for the detection of organic mercury.

Method of Detection:
A. Colorimetric detection of total mercury level
B. Atomic absorption spectrophotometry of total mercury level
C. Gas chromatograph with electron capture detector for organic mercury
D. Thin-layer chromatographic detection of organic mercury
E. Ultraviolet detector preceded by wet chemistry package

Ranges: The detection ranges for A and D are approximately 0.02 to 0.5 ppm of mercury in water, and for B and C, approximately 0.1 to 10 ppb of mercury in water. For E, the measuring ranges are from 0–1 μg/l to 0–100 ppm.

Costs:
A. Colorimetric spectrophotometers for laboratory applications range from $2000 to $5000.
B. About $100,000, depending on pretreatment of sample
C. About $35,000 for laboratory application
E. $50,000 or more

Partial List of Suppliers: (For a more complete list, for chromatograph suppliers, see Section 8.12; for colorimeter suppliers, see Section 8.15; for atomic absorption analyzers, see Section 8.22; for chromatographs, see Section 8.12; for ultraviolet analyzer, see Section 8.61; and for wet chemistry analyzer, see Section 8.66.)
ABB (www.abb.com/analytical)
AMETEK, Process and Analytical Instruments Co. (E) (www.ametekpi.com)
Aurora Instruments (www.aurora-instr.com)
Bacharach Inc. (www.bacharach-inc.com)
Brooks Rand LLC (www.brooksrand.com)
Buck Scientific (www.bucksci.com)
Cetac (www.cetac.com)
Cole-Parmer (A) (www.coleparmer.com)
Davis Inotek Instr. (www.inotek.com)
EcoChem Analytics (www.ecochem.biz)
Fisher Scientific (www.fishersci.com)
LECO Corp. (www.leco.com)
Leeman Labs Inc. (www.leemanlabs.com)
Mercury Instr. GmbH (www.mercury-instruments.de)
Milestone (www.milestonesc.com)
Perkin-Elmer Corp. (B, E) (www.instruments.perkinelmer.com)
P.S. Analytical (www.psanalytical.com)
Rigaku MSC (www.rigakumsc.com)
Roentec GmbH (www.roentec.de)
Sick (www.sickmahaihak.com)
Shimadza Scientific Instruments
Tekran Inc. (www.tekran.com)
Thermo Automation Syst. (www.thermo.com)

© 2003 by Béla Lipták

INTRODUCTION

While Section 8.30 described the analyzers used in the monitoring of mercury concentration in ambient air samples, this section is devoted to the measurement of mercury in water. There is unavoidably some overlap between the two sections.

The analyzers used for the measurement of mercury are discussed in more detail in other sections of this chapter: chromatographs are covered in Section 8.12, colorimeters in Section 8.15, atomic absorption analyzers in Section 8.22, ultraviolet (UV) analyzers in Section 8.61, and wet chemistry analyzers in Section 8.66. Because these analyzers are mostly on-line, the emphasis in this section is placed on, but not limited to, the laboratory procedures, while the discussion of on-line units is not as detailed in this section.

The continuous on-line mercury monitors are used in many industrial processes, including both effluent and quality controls in chlorine–alkali plants, quality controls of drinking water and of sulfuric acid, control of industrial sewage and purification plants, monitoring the scrubber water in power plants and of waste incinerators, just to mention a few.

TOTAL MERCURY DETECTION

Sample Treatment

Mercury is present in the environment in organic and inorganic compounds, either dissolved in water or adsorbed on particulate matter or sediments. The total mercury level is the sum of organic mercury and inorganic mercury in a sample.

To analyze a variety of mercury compounds by the commonly available methods, it is necessary to digest the sample in order to effect decomposition of the accompanying substances, and thereby to convert the mercury present in the sample into inorganic mercury (Hg^{2+}). This digestion is carried out by mixing the sample with a mineral acid and a strong oxidizing agent and heating it.

The combinations in common use are H_2SO_4—$KMnO_4$, HNO_3—$KMnO_4$, H_2SO_4—H_2O_2, H_2SO_4—HNO_3, and HCl—$KClO_3$. The combination of H_2SO_4—$KMnO_4$ or HNO_3—$KMnO_4$ is best suited for analysis of water. The concentration range most often used is 1 to 5 *N* for the acid and 1 to 5% for $KMnO_4$.

Heating is either by a water bath or by direct flame. The digestion must be carried out in the presence of excess $KMnO_4$ and, therefore, a fresh addition must be made whenever the color of the permanganate fades (the digestion being complete when the color of $KMnO_4$ no longer fades).

In case of biological materials where the samples are rich in organic matter, the samples can best be digested by heating with H_2SO_4—HNO_3 until white fumes (sulfuric acid) evolve. The digestion is complete when the solution becomes clear. When carbonization of organic matters occurs, the digestion is continued with fresh addition of nitric acid. An apparatus

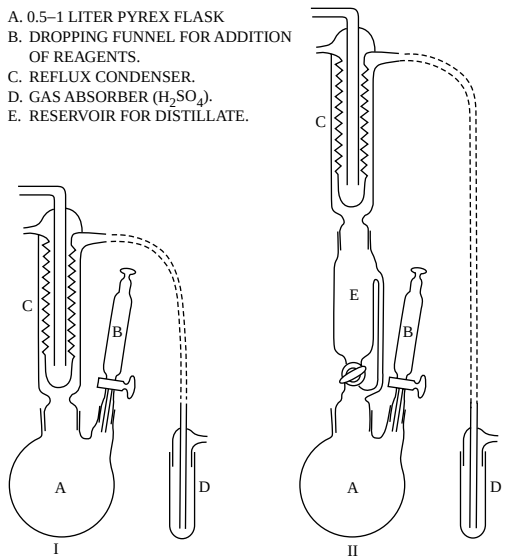

FIG. 8.31a
Digestion flasks for detection of mercury (I) in water and (II) in organic materials.

such as that shown in Figure 8.31a prevents the small losses due to vaporization of mercury during the digestion.

Since upon completion of the digestion an excess of the oxidizing agent is present in the digested solution, it becomes necessary to reduce the remaining oxidizing agent. Hydroxylamine is best suited for the reduction of NO_2 or $KMnO_4$. Hydroxylamine alone, however, cannot reduce nitrous acid completely with nitric acid as a digesting liquor, and simultaneous addition of urea is advisable. The samples thus digested are then analyzed for mercury by one of the detectors described below.

Colorimetric Detection

Dithizone is widely used in the colorimetric analysis of mercury, where the absorption of visible light is detected as a measure of mercury concentration. When an aqueous solution of mercury with a wide pH range (0 to 13) is shaken with a solution of dithizone in chloroform, carbon tetrachloride, or benezene, a mercury complex is formed that dissolves in the organic layer. Dithizone is designated H_2Dz, the mercuric (Hg^{2+}) dithizonate is represented as Hg $(HDz)_2$, and the mercurous (Hg^{1+}) dithizonate as Hg (HDz).

A solution of Hg $(HDz)_2$ in carbon tetrachloride shows a maximum absorption at the wavelength of 485 to 490 nm. Mercury forms Hg (HDz) in the absence of water or a secondary dithizonate, HgDz, in aqueous alkaline solutions, which are deficient in dithizone. This compound gives a violet color.

Dithizone reacts with silver (Ag), copper (Cu), gold (Au), palladium (Pd), and platinum (Pt) in addition to Hg under acidic conditions, but it is generally sufficient to consider interference of Cu alone in environmental analysis. Metals such as lead (Pb), cadmium (Cd), zinc (Zn), nickel (Ni),

© 2003 by Béla Lipták

cobalt (Co), and iron (Fe) are not extracted from an acidic solution. Moreover, tin (Sn) and bismuth (Bi) are not extracted from a strongly acidic solution unless they are present in large quantities.

Interference by Copper Interference of Cu may be eliminated by one of the following methods:

1. When a small flow of a dithizone in carbon tetrachloride solution is added to a weakly acidic solution containing Hg and Cu, extraction of Hg is completed before that of Cu begins. Separation of Hg and Cu is thus possible.
2. Extraction of Hg and Cu can be carried out simultaneously with excess dithizone and then treated with a masking agent such as KBr, KI, and $Na_2S_2O_3$ to decompose only Hg $(HDz)_2$ and to transfer Hg^{2+} into the aqueous layer. Thereafter, Hg is again extracted with dithizone.
3. Ethylenediaminetetraacetic acid (EDTA) in the form of the disodium salt can be added as a masking agent of Cu, and Hg alone is extracted with dithizone. The extraction is carried out at a pH of 2.5 or higher, preferably 5.5, at which level Cu–EDTA is stable.

A relatively large quantity of Cl^{2-} also interferes with the extraction of Hg^{2+} under strongly acidic conditions. For instance, the extraction of Hg can be done without difficulty, when up to 1 *M* of Cl^- is in 50 ml of 1 *N* sulfuric acid. Extraction becomes incomplete as Cl^{1-} exceeds 2.5 *M*. Under neutral to alkaline conditions, some interference is also observed when NH_4^{1+} is present in large quantities.

Analysis Procedure The procedure generally followed in the colorimetric determination of mercury by dithizone is as follows: The sample solution is extracted repeatedly with excess dithizone, and Hg^{2+} is captured in the solvent layer as Hg $(HDz)_2$. Contaminants are also removed in this step. The Hg $(HDz)_2$ is then decomposed by a suitable masking or oxidizing agent, and the Hg^{2+} is liberated and transferred into the aqueous layer. Here it is reacted with a given excess if dithizone, under specified conditions, and its concentration are measured colorimetrically.

The extraction immediately preceding the colorimetric determination is carried out under acidic conditions. The color developed is a mixture of orange (due to Hg $(HDz)_2$) and green (due to the excess of dithizone). The absorbance of such mixed colors can be measured directly, or measurements may be made at 485 to 490 nm, which is the maximum absorption wavelength of Hg $(HDz)_2$. Higher sensitivity and accuracy can be obtained at 605 to 620 nm, which is the maximum absorption wavelength of dithizone.

With the single-color method, mercury is extracted with a solution of dithizone. The excess dithizone is removed by shaking it with dilute aqueous ammonia. The absorbance is measured at 485 to 490 nm. With this method, changes in the concentration of dithizone do not affect the results. Hg $(HDz)_2$ gradually fades in the light. This tendency becomes pronounced when impure dithizone is used, whereas a solution of high-grade dithizone remains stable for several hours in a lighted room.

Atomic Absorption Spectrophotometry

In atomic absorption spectrophotometry, a solution containing mercury is introduced directly into a flame. This technique does not give high sensitivity in the analysis of mercury, and it is difficult to detect mercury at a concentration below 0.2 ppm. Mercury can be analyzed with high sensitivity if the aqueous solution is first reduced to mercury vapor and then sent to the absorption cell by aeration, where it is analyzed by atomic absorption spectrophotometry without the use of flame. Stannous salts are best suited for reducing mercury in an aqueous solution. Mercuric (Hg^{2+}) ions are reduced by stannous salts to metallic mercury (Hg^0) according to Equation 8.31(1):

$$Hg^{2+} + Sn^{2+} \rightarrow Hg^0 + Sn^{4+} \qquad \textbf{8.31(1)}$$

The metallic mercury thus formed is vaporized by aeration and is sent to the absorption cell (with quartz windows), where its absorbance is measured at a wavelength of 253.7 nm.

Figure 8.31b illustrates both the closed and open systems of measurement. Beer's law holds for the mercury levels of

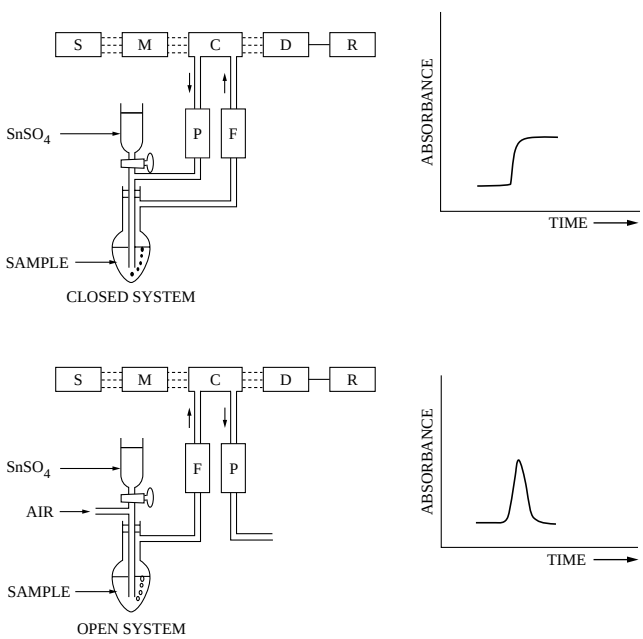

S. LIGHT SOURCE.
M. MONOCHROMETER.
C. ABSORPTION CELL.
D. DETECTOR.
F. FILTER (COTTON OR DRYING AGENT.)
P. PUMP.

FIG. 8.31b
Flameless atomic absorption spectrophotometer with reduction–aeration hardware.

© 2003 by Béla Lipták

0.1 to 10 μg involved in this method. An atomic absorption spectrophotometer is best suited for this measurement, but simpler apparatus are also commercially available.

If large quantities of metal ions are present, it can be reduced by the addition of stannous salts. If these ions are not reduced, they may interfere with the reduction of mercury. Interfering elements, however, are rarely present in ordinary environmental samples in sufficient quantities to cause interference. If the aeration causes the vaporization of organic substances, which absorb UV rays, it will interfere with the analysis of mercury. Hence, it is necessary to decompose organic substances thoroughly.

Analysis Procedure A suitable amount of water sample is introduced into a 500-ml flask and 20 ml of sulfuric acid (1 + 1), plus 15 to 20 ml of $KMnO_4$ (6%) is added. After mixing, a reflux condenser is attached to the flask and the mixture is boiled. The $KMnO_4$ solution is replenished when it has been consumed. The flask is cooled when the color of $KMnO_4$ no longer disappears, and the excess $KMnO_4$ is reduced with a hydroxylamine sulfate solution.

A portion (containing 10 μg or less of mercury) is transferred into a flask such as the one shown in Figure 8.31b. Two milliliters of sulfuric acid (1 + 1) and 2 ml of stannous sulfate (10% in 2 *N* H_2SO_4) are added, and aeration is started at a rate of 2 l/min.

The vapor thus formed is driven into the vapor phase and circulated in a closed circuit. The UV absorption at 253.7 nm is detected in the optical cell of an atomic absorption spectrophotometer. A typical record of the UV absorbance is shown in Figure 8.31c. A calibration curve is prepared with standard solutions containing known amounts of mercury to assist in the quantitative analysis. The relative standard deviation for this method is reportedly between 2 and 10%.

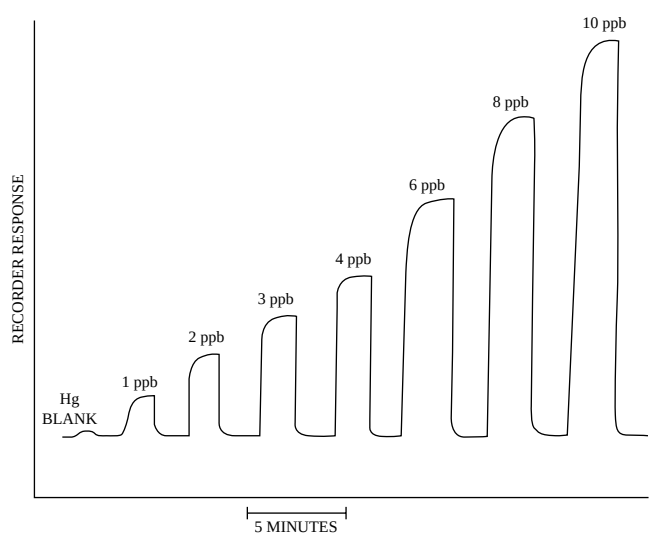

FIG. 8.31c
UV absorption record of vapor sample produced by aeration.

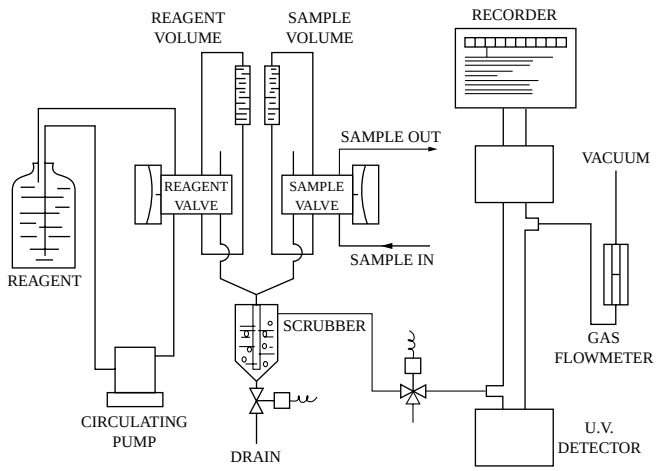

FIG. 8.31d
Continuous mercury monitor.

On-Line Measurement

Figure 8.31d illustrates the components of an automatic mercury monitor with an UV detector. In the first step, the mercury is reduced to the elemental state by the addition of tin(II) chloride or $NaBH_4$. Subsequently, mercury is stripped from the aqueous phase by an airstream and is carried into an optical detector cell, which can be made of silica (Suprasil). Here the mercury concentration is detected by UV absorption measurement at a wavelength of 253.7 nm.

This method of analysis is referred to as cold vapor atomic absorption spectroscopy (CVAAS). It is both sensitive (lowest range is 0 to 1 μg/l) and selective for mercury. Measuring ranges are available from 0.01 ppb to 100 ppm. The reagent requirement is 3 l per week for each reagent. Transmitter outputs can be 4 to 20 mA analog or bidirectional RS 232. Some of these analyzers are fully automated.

Automatic operation can include unattended operation guaranteed by self-diagnostics for alarming when malfunctions are detected, for example, the loss of reagent, sample, or stripping airflows; leakage of fluids; photometer lamp burnout; or need for recalibration. The continuous-measurement mode can also be switched to a periodic one. Automatic calibration can also be performed. This is done by automatically switching from the sample stream to a calibration solution. Similarly, the zero can also be automatically reset, and rinsing steps can be automatically initiated for the purpose of providing automatic self-cleaning. This analyzer is illustrated in Figure 8.31e.

ORGANIC MERCURY DETECTION

Sample Treatment

In organomercury compounds of the RHgX type, R is an organic group, such as alkyl and phenyl, and X is an electronegative group, such as halogen and hydroxyl. Those carrying

© 2003 by Béla Lipták



FIG. 8.31e
Mercury process analyzer. (Courtesy of Mercury Instruments GmbH.)

methyl, ethyl, and propyl groups are known to be the causes of Minamata disease (a severe neurological disorder resulting from poisoning by organic mercury and leading to severe permanent neurological and mental disabilities or death). When these compounds are present in water, it is first necessary to extract them with a suitable solvent.

The solubility of a compound of the RHgX type in organic solvents varies. If X is a halogen, the compound is soluble in aromatic hydrocarbons such as benzene and toluene. If X is an ion such as SO_4^{2-} OH^- or $CH_3CO_2^{1-}$, the solubility in hydrocarbons is extremely low. Therefore, it is necessary first to convert X to a halogen, and then the RHgX compound can be extracted with an organic solvent such as benzene and toluene. The aqueous solution is made acidic by addition of hydrochloric acid before extraction. The lower alkyl mercury compounds are moderately soluble in water, and a relatively large amount of solvent is necessary to effect quantitative extraction.

The organomercury compounds extracted in the organic solvent are generally contaminated and must be cleaned. The cleaning of an RHgX-type compound can be performed effectively by backextraction with an aqueous solution of a sulfur-containing compound such as cysteine. Organomercury compounds react with a sulfhydryl compound according to Equation 8.30(2) and move from the organic solvent phase to the aqueous phase.

$$\text{RHgX} + \text{R}'\text{SH} \rightarrow \text{RHgSR}' + \text{HX} \qquad \textbf{8.31(2)}$$

where both R and R′ are organic groups and X is an electronegative group. Many of the organic compounds remain in the organic solvent phase, and the purpose of cleaning is thereby accomplished.

The transfer of the organomercury compounds from the organic solvent phase to the aqueous phase is quantitative. Therefore, when the backextraction is carried out by using a smaller volume of the aqueous solution against a known volume of the organic solvent, concentration of the organomercury compounds may be determined simultaneously with cleaning up.

The organomercury compounds extracted back into the aqueous layer are again liberated as RHgCl by addition of hydrochloric acid to the aqueous solution according to Equation 8.31(3).

$$\text{RHgSR}' + \text{HCI} \rightarrow \text{RHgCI} + \text{R}'\text{SH} \qquad \textbf{8.31(3)}$$

The RHgCl liberated is extracted with a small amount of benzene and analyzed by gas chromatographic techniques.

Gas Chromatography

Lower alkylmercury and phenylmercury compounds vaporize upon heating and can be analyzed by gas chromatography. The use of an electron capture detector gives high sensitivity and is best suited for analysis of traces of organic mercury. For example, methylmercury can be detected to a level of 1×10^{-11} g.

© 2003 by Béla Lipták

Organomercury compounds are highly reactive with metals; consequently, it is not desirable to use metal tubing as column materials. A glass column is preferable. Also, a polar substance as a liquid phase in the column yields better results. The liquid phases most frequently used are polyethylene glycol, polydiethylene glycol succinate, and polybutanediol succinate.

The amount of the liquid phase to be coated on the support is preferably 5 to 10% for analysis of alkylmercury and about 2% for analysis of phenylmercury. An increase in the coating amount causes an increase in bleeding gas and a decrease in the standing current of the detector, with resultant lower sensitivity when a high column temperature is used. The size of the liquid phase is reduced for high-sensitivity analysis.

The use of the substractive technique is recommended for simplified identification of organomercury compounds by gas chromatography. When an organic solvent, such as benzene or toluene, which contains organomercury compounds, is mixed with the aqueous solution of a bivalent sulfur compound, such as $Na_2S_2O_3$ or cysteine, the organomercury compounds disappear from the organic solvent. If one compares the gas chromatograms before and after this treatment, one will be noticed that the peaks corresponding to the organomercury compounds disappeared or diminished markedly after treatment.

The analysis procedure is as follows: Ten milliliters of concentrated hydrochloric acid is added to 500 ml of the sample water containing methylmercury compounds. The resultant solution is mixed with 100 ml of benzene, and the mixture is allowed to settle. The aqueous layer is separated and is extracted again with 100 ml of fresh benzene. This is repeated three times, the aqueous layer is discarded, and the combined benzene layer is washed with distilled water.

The benzene layer is separated and is extracted back with 10 ml of a 0.1% aqueous solution of 1-cysteine. The aqueous layer is also separated, and 1 ml of concentrated hydrochloric acid and 2 ml of benzene are added. After mixing, the benzene layer is separated and dried over a small amount of anhydrous sodium sulfate. A 10-μl sample is analyzed by gas chromatography.

The column recommended contains 5% polydiethylene glycol succinate on Chromosorb W, 60 to 80 mesh, packed in glass tubing, 1 m long, and with a 3-mm inside diameter. Column temperature is set at 266°F (130°C), and the flow rate of carrier gas is maintained at 60 ml/min. Methylmercury chloride is eluted in 3 to 5 min under these conditions, and concentrations of 1 μg/l or less can be detected by this method.

Thin-Layer Chromatography

Thin-layer chromatography offers a simple and inexpensive method for analysis of organomercury compounds. Silica gel and alumina are mainly used as the adsorbent layer. The R_f values of organomercury compounds for a variety of developers are shown in Tables 8.31f and 8.31g. The mercury compounds are visualized by spraying the plate with a solution of dithizone. Ordinarily, mercury of the order of 0.5 μg can be identified visually in this manner. When developed as organomercury dithizonate, visualization becomes unnecessary and mercury on the order of 0.1 µg can be identified visually.

TABLE 8.31f
R_f Value of Organomercury Compounds

	Developer[a]				
Compound	*A*	*B*	*C*	*D*	*E*
Methylmercuric chloride CH_3HgCl	0.35	0.59	0.29	—	0.42
Methylmercuric iodide CH_3HgI	0.04	0.03	—	—	—
Ethylmercuric chloride C_2H_5HgCl	0.41	0.74	0.50	0.72	0.46
Ethylmercuric phosphate $(C_2H_5Hg)_2HPO_4$	0	0	0.49	0.67	—
Methoxyethylmercuric chloride $CH_3OC_2H_4HgCl$	0.23	0.49	0.46	0.74	—
Phenylmercuric chloride C_6H_5HgCl	0.51	0.73	0.56	0.76	—
Phenylmercuric iodide C_6H_5HgI	0.74	0.84	0.92	0.86	—
Phenylmercuric acetate $C_6H_5HgCH_3CO_2$	0.39	0.64	0.86	0.83	0.48

[a]Key:
Adsorbent layer; silica gel
A. *n*-Phexane:acetone (85:15)
B. *n*-Hexane:acetone (70:30)
C. Butyl alcohol saturated with water
D. Isopropyl alcohol:water (90:10)
E. Chloroform

© 2003 by Béla Lipták

TABLE 8.31g
R_f Value of Organomercury Dithiozonates

	Developer[a]					
Compound	*1*	*2*	*3*	*4*	*5*	*6*
Methylmercury dithizonate $CH_3Hg(HDz)$[b]	0.64	0.48	0.57	0.77	0.89	0.86
Ethylmercury dithizonate $C_2H_5Hg(HDz)$	0.64	0.51	0.62	0.78	0.91	0.87
Methoxyethylmercury dithizonate $CH_3OC_2H_4Hg(HDz)$	0.32	0.16	0.25	0.44	0.58	0.49
Ethoxyethylmercury dithizonate $C_2H_5OC_2H_4Hg(HDz)$	0.44	0.23	0.34	0.55	0.71	0.67
Phenylmercury dithizonate $C_6H_5Hg(HDz)$	0.48	0.34	0.46	0.62	0.72	0.69
Mercury dithizonate $Hg(HDz)_2$	0.19	0.09	0.17	0.28	0.19	0.15

[a]Key:
1. Hexane:acetone (9:1)
2. Hexane:acetone (19:1)
3. Hexane:acetone (93:7)
4. Petroleum ether:acetone (9:1)
5. Hexane:acetone (19:1)
6. Petroleum ether:acetone (19:1)

Adsorbent layer
1–4 silica gel
5–6 alumina

[b]HDz = abbreviation for dithizonate ligand.

Bibliography

Control Staff, "Mysteries of Gold Film Sensors to be Studied," *Control*, January 1989.

Denny, R. and Sinclair, R., *Visible and Ultraviolet Spectroscopy*, New York: John Wiley & Sons 1987.

Ewing, G. W., Ed., *Instrumental Methods of Chemical Analysis*, New York: McGraw-Hill, 1981.

Frei, R. W. and Hutzinger, O., *Analytical Aspects of Mercury and Other Heavy Metals in the Environment*, Taylor and Francis, New York, 1976.

Guilbault, G. G., Ed., *Fluorescence*, New York: Marcel Dekker, latest edition.

Hughes, T. J., *The Finite Element Method*, Dover Publishers, Galveston, TX, 2000.

Kwon, Y. W., *The Finite Element Method Using MATLAB*, Boca Raton, FL: CRC Press, 2000.

Leithe, W., *The Analysis of Air Pollutants*, Ann Arbor, MI: Ann Arbor Science Publishers, latest edition.

"Mercury in Your Environment," www.rigakumsn.com/Hg/Hg-articles.shtml.

"Portable High-Performance Mercury Analyzer for Field Use Mercury Sniffer," *The Rigaku Journal*, Vol. 15, 1998.

Sax, N. and Lewis, R., *Dangerous Properties of Industrial Materials*, New York: Van Nostrand Reinhold, 1988.

Seiler, H. and Sigel, H., *Handbook on Toxicity of Inorganic Compounds*, New York: Marcel Dekker, 1988.

Smith, D. et al., *EPA's Sampling and Analysis Methods Database*, Chelsea, MI: Lewis Publishers, 1990.

Tatton, J. O. G. and Wagstaffe, P. J., "Identification and Determination of Organomercurial Fungicide Residues by Thin-Layer and Gas Chromatography," *Journal of Chromatography*, Vol. 44, 1969.

USEPA (United States Environmental Protection Agency) *Mercury in Water by Cold Vapor Atomic Fluorescence Spectrometry*, EPA Method 245.7, January, 2001.

USEPA *Methyl Mercury in Water by Distillation, Aqueous Ethylation, Purge and Trap and CVAFS*, EPA Method 1630, January, 2001.

Vaughn, W. W., "A Simple Mercury Vapor Detection for Geochemical Prospecting," Geological Survey Circular 540, U.S. Department of the Interior, 1967.

© 2003 by Béla Lipták

8.32 Moisture in Air: Humidity and Dew Point

A. BRODGESELL (1969, 1982) **B. G. LIPTÁK** (1995, 2003)

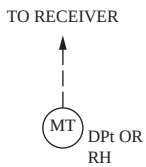

Flow Sheet Symbol

Types of Designs:

A. Wet-dry bulb differential, psychrometer
B. Hair or synthetic fiber element
C. Cellulose element
D. Thin-film capacitance (aluminum oxide or polymer)
E. Dunmore-type solution resistance element
F. Lithium chloride saturated salt dew-point sensor
G. Polystyrene surface resistivity (Pope cell)
H. Surface condensation on chilled surface (H1, detected optically using chilled mirror; H2, detected electrically)

Ranges:

A. 10 to 100% RH or 20 to 120°F (–5 to 50°C)
B. 5 to 100% RH for recorder; 20 to 100% RH for dial
C. 0 to 100% RH
D. 0 to 100% RH; when used as dew-point sensor, –40 to 50°F (–40 to 10°C) is typical, with polymer sensors down to 96°F (–60°C); 12 to 99% RH or –50 to 175°F (–64 to 79°C) dew point
G 15 to 95% RH
H. –100 to 200°F (–73 to 93°C) dew point or its equivalent (1 to 100% RH); high temperature units available up to 350°F (177°C)

Inaccuracy:

A. 2% RH
B. 3 to 5% RH
C. 3 to 5% RH
D. 2 to 3% RH standard; 1% RH up to 90% RH and 2% RH over 90% RH is available (when used to detect dew point, an error of 4°F [2°C] is typical)
F. 2°F (1°C) for dew points between 10 and 100°F (–12 and 38°C)
G. 3 to 5% RH
H. 0.3 to 0.8°F (0.2 to 0.4°C) dew point or 1% RH between 20% RH and 90% RH

Costs:

A. Sling psychrometer $75 to $1500; laboratory psychrometer, $200; digital, microprocessor-based psychrometer, $1000
B. 5 in. (125 mm) diameter dial, $150; recording hygrothermograph, $500 to $600
C. 5 in. (125 mm) dial or digital indicator, about $150; recorder, $750
D. Portable, battery-operated digital indicator of RH and temperature, $300 to $1000; benchtop meters, $1000 to $2500; HVAC-quality duct or wall-mounted electronic transmitter, $250 (uncalibrated) to $500; industrial-quality electronic transmitter, $1500; high-temperature transmitter, $2,500
E. Wall-mounted transmitter, $500
F. $1000 to $2000 for transmitter
G. HVAC transmitters, $500 to $750
H. Portable, battery-operated unit, $3000; bench or meteorological unit with continuous balance and aspirator, $8000 and up (H1, cycled chilled-mirror unit, from $3000 to $5000)

Partial List of Suppliers:

Abb Inc.-Instrumentation (www.abb.com/us/instrumentation)
Ametek Process Instruments (www.ametekpi.com)
Ametek Thermox (www.thermox.com)
APT Instruments (www.aptinstruments.com)

© 2003 by Béla Lipták

Barcharach Inc. (B) (www.bacharach-inc.com)
Barnant Co. (www.barnant.com)
Bartec U.S. Corp. (www.bartecus.com)
Bristol Babcock Inc. (C) (www.bristolbabcock.com)
Chandler Eng. (H1) (www.chandlereng. com)
Chino Works America Inc. (www.chinoamerica.com)
Cosa Instrument Corp. (A, D) (www.cosa-instrument.com)
Dickson (C) (www.dicksonweb.com)
Dwyer Instruments (www.dwyer-inst.com)
Edge Tech. (www.edgetech.com)
Endee Eng. Ltd. (H1) (www.endee-engineers.com)
Endress + Hauser Inc. (D, G, H2) (www.us.endress.com)
Flow-Tech Inc. (www.flowtechonline.com)
Foxboro-Invensys (F) (www.foxboro.com)
General Eastern (E, G, H1) (www.geinet.com)
Honeywell Sensing and Controls (D) (www.honeywell.com/sensing)
Hotek Technologies (H1) (www.hotektech.com)
Ice Qube Inc. (www.iceqube.com)
Instrumentation Group (www.instrumentationgroup.com)
iSensors Corp. (www.isensors.com)
Jumo Process Controls (www.jumousa.com)
Kahn Instruments Inc. (D, H) (www.kahn.com)
Lion Precision (www.lionprecision.com)
MEE Industries Inc. (www.meefog.com)
Michell Instruments Ltd. (D) (www.michell-instruments.com)
Monarch Instrument (www.monarchinstrument.com)
Nova Analytical (D, H1) (www.nova-gas.com)
Ohmic Instrument Co. (E) (www.ohmicinstruments.com)
Omega Engineering (www.omega.com)
Otek Corp. (www.otekcorp.com)
Panametrics Inc. (D) (www.panametrics. com)
Phonetics Inc. (www.sensaphone.com)
Princo Instruments Inc. (A) (www.princoinstruments.com)
Protimeter (H1) (www.professionalequipment.com)
Rosemount Analytical Inc. (www.processanalytic.com)
Rotronic Instrument Corp. (D) (www. rotronic-usa.com)
Schneider Electric/Square D (www.squared.com)
Testo Inc. (www. testo.com)
TTI (www.ttiglobal.com)
Vaisala Oyj. (D) (www.Vaisala.com)
Watlow (G) (www.watlow.com)
Yokagawa Corp. of America (www.yca.com)

Most Popular: Panametrics, Ametek, General Eastern, Endress & Hauser, and Vaisala

INTRODUCTION

Leonardo da Vinci was the first to attempt the measurement of humidity by weighing a ball of wool. Air is a mixture of oxygen, nitrogen, and water vapor. Water vapor follows the ideal gas laws in this mixture. The amount of water vapor per unit volume of air can vary by about 100,000 to 1 as one compares the water content of hot, saturated air to bone-dry arctic air.

The most frequently used units in expressing the amount of water vapor in air include relative humidity (0 to 100% RH); dew point (saturation) or wet bulb temperature (both expressed in °F or °C); and volume or mass ratio, expressed as part per million (ppm) volume or weight.

The sensors described in this section are most often used in weather monitoring or HVAC-related applications, although they also are used in industry. The moisture analyzers described in the next section are more oriented toward process industry applications and are less widely used for HVAC, but this separation is not a clear one. For this reason, the illustration that gives the operating ranges of a number of humidity sensors (Figure 8.32a) also includes the electrolytic hygrometer, which will be discussed in the next section.

© 2003 by Béla Lipták

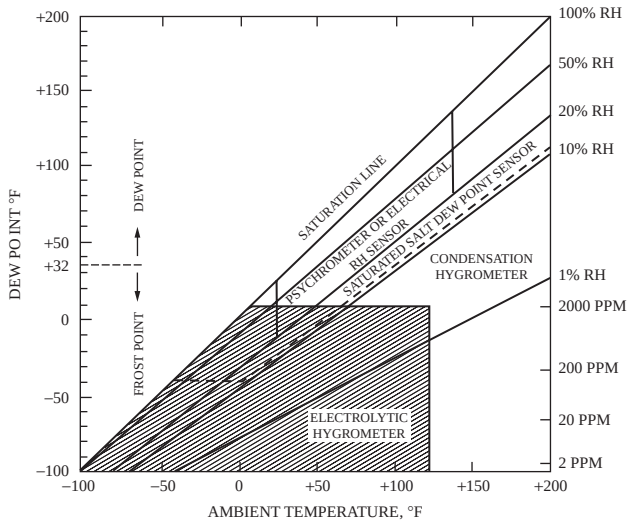

FIG. 8.32a

The operating ranges of different humidity sensors. Most humidity/dew-point detectors can make measurements at higher values of humidity and temperature but are limited in their performances at low temperatures and low concentrations of moisture. With the exception of some of the thin-film capacitance probes, they are also limited to a maximum temperature of 200°F (95°C).[1]

This section starts with some definitions and then provides the descriptions of the individual designs.

DEFINITIONS

Absorption—The taking in of a fluid to fill the cavities in a solid.

Adsorption—The adhesion of a fluid in extremely thin layers to the surfaces of a solid.

Dew point—Saturation temperature of a gas–water vapor mixture (the temperature at which water condensation occurs as a gas is cooled).

Hygrometer—An apparatus that measures humidity.

Hygroscopic material—A material with great affinity for moisture.

Partial pressure—In a mixture of gases, the partial pressure of one component is the pressure of that component if it alone occupied the entire volume at the temperature of the mixture.

Relative humidity—The ratio of the mole fraction of moisture in a gas mixture to the mole fraction of moisture in a saturated mixture at the same temperature and pressure. Alternatively, the ratio of the amount of moisture in a gas mixture to the amount of moisture in a saturated mixture at equal volume, temperature, and pressure (the ratio of how much water vapor is in the air vs. the maximum it could contain at the particular temperature).

Saturated solution—A solution that has reached the limit of solubility.

Saturation pressure—The pressure of a fluid when condensation (or vaporization) takes place at a given temperature. (The temperature is the saturation temperature.)

Specific humidity—The ratio of the mass of water vapor to the mass of dry gas in a given volume.

RELATIVE HUMIDITY SENSORS

Humidity refers to the water vapor contained in the air at a particular temperature. Warm air has a greater capacity for water vapor than does cold air.

Relative humidity (RH) is the ratio of the actual partial pressure of the water vapor to the saturation vapor pressure at a particular temperature. Therefore, in a room that has 50% RH at 20°C, the RH will drop to 37% if the temperature rises to 25°C. (Note that temperature has no effect on the dew point temperature, which in the above example stays constant at 9.3°C.)

Wet and Dry Bulb Hygrometers

When water changes phase from liquid to vapor, an amount of heat equal to the latent heat of vaporization must be supplied from the environment for each unit mass of water evaporated. The vaporization, in addition to its dependence on the amount of heat available, is also a function of the degree of saturation or relative humidity of the atmosphere surrounding the water. The wet and dry bulb hygrometer takes advantage of this fact to obtain a relative humidity measurement.[2]

The instrument consists of two temperature-sensitive elements exposed to the atmosphere whose moisture level is to be measured. One of the two elements, the wet bulb, is wrapped with a wick soaked in water; the other element, the dry bulb, is left bare. Water evaporating from the wick lowers its temperature and that of the temperature element. The temperature values indicated by the two thermometers are related to the relative humidity of the sample atmosphere. Relative humidity can be calculated as shown on the following pages using the wet and dry bulb temperature readings, or relative humidity can be read from a psychrometric chart such as the one shown in Figure 8.32b. For a dependable measurement, the sample velocity should be well in excess of 10 ft/s (3 m/s). The sensing elements should therefore be mounted where there is adequate circulation, or forced circulation must be provided by means of a fan.

Figure 8.32c shows a sling psychrometer consisting of wet and dry bulb thermometers and mounting arranged so that the unit can be whirled manually when a reading is to be made.

Wet-Dry Bulb Hygrometers Figure 8.32d shows a wet and dry bulb assembly for mounting in a duct. The wick is kept wet by a water reservoir mounted externally, or a continuous water supply can be piped to the unit. A similar device is

© 2003 by Béla Lipták

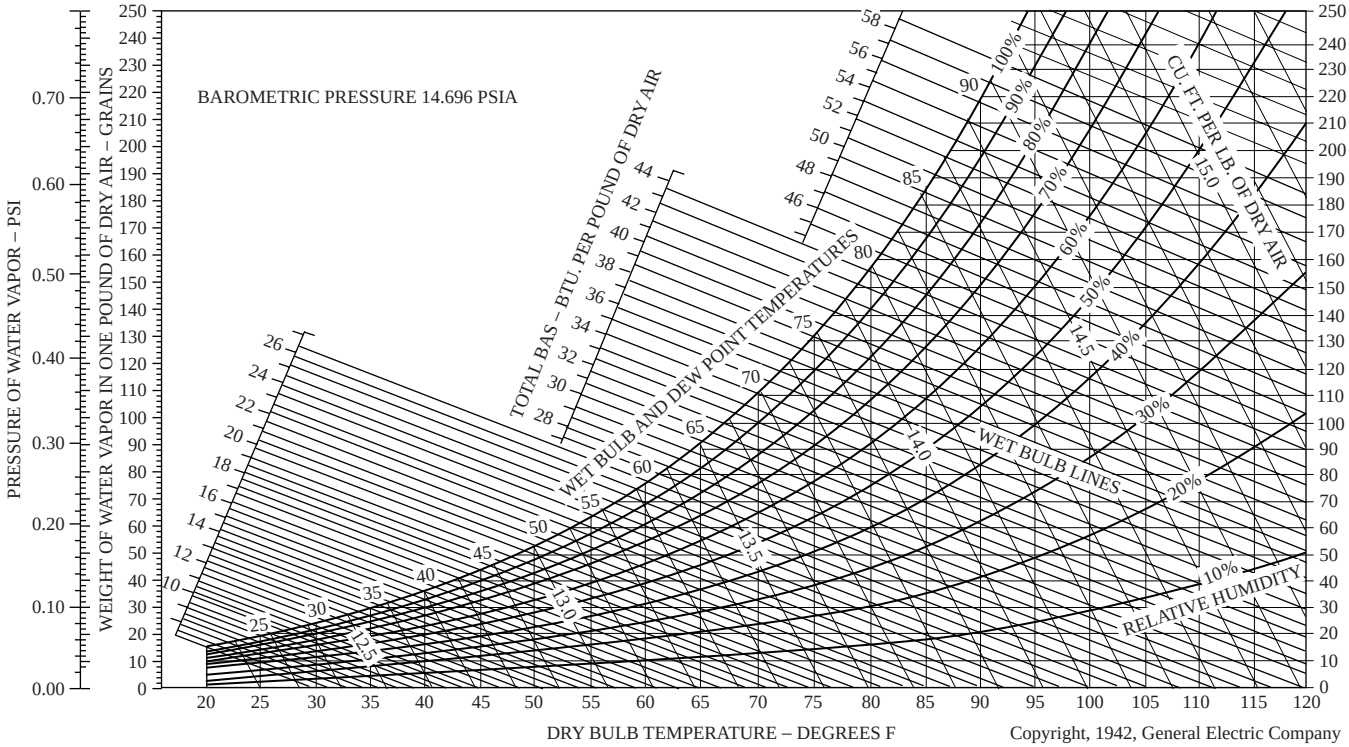

FIG. 8.32b
Psychrometric chart. See Appendix A.1 for SI units.

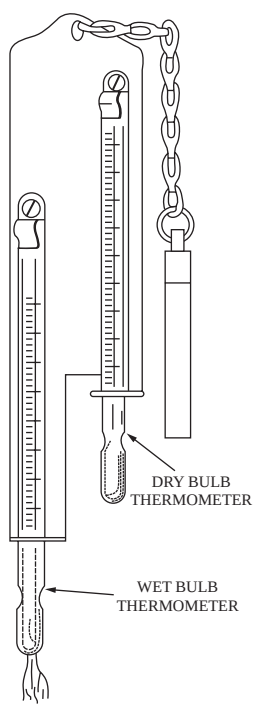

FIG. 8.32c
Sling psychrometer.

available for mounting in a room or compartment. Generally, these units are connected to a two-pen recorder, which provides continuous, automatic monitoring of the moisture level in the atmosphere.

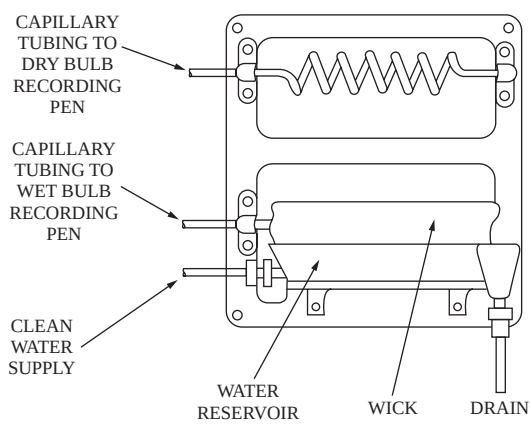

FIG. 8.32d
Wet-dry bulb hygrometer using filled system temperature sensors arranged for duct mounting.

Figure 8.32e shows a wet bulb element for installation in a duct of pipeline operating at elevated pressures. In this design, a porous sheath replaces the wick. Through this sheet, water can evaporate. The water supply pressure to the porous sleeve must be slightly higher than the process pressure. For process lines at constant low pressure, a standpipe at the wet bulb element can be used to provide the required water pressure. Usually, however, a differential regulator, as shown in the diagram, is used to maintain the differential pressure across the porous sheath.

© 2003 by Béla Lipták

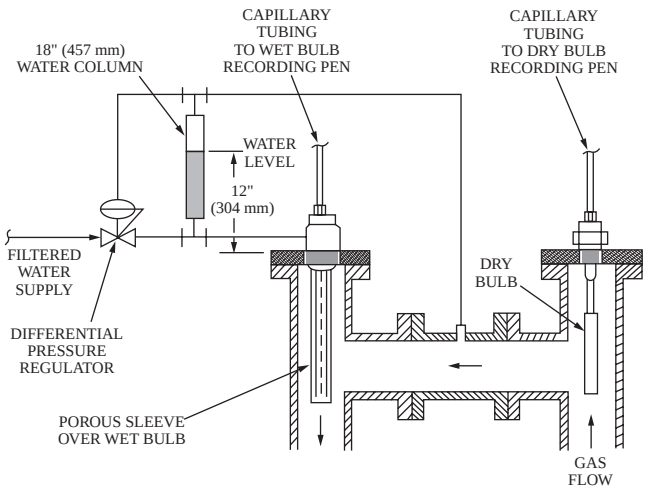

FIG. 8.32e
Wet-dry bulb hygrometer using filled system temperature sensors arranged for pressure pipe mounting.

Assman Psychrometers Laboratory-type (Assman) psychrometers are thermally shielded from radiation and are aspirated at high air velocities to provide accurate readings. In industrial applications, the psychrometer's performance is limited by wet bulb contamination and by its inability to read humidities below 10 to 20% RH (see Figure 8.32a). The reason for this is in the difficulty of reaching the low wet bulb (high differential) temperature when the air is dry, and the high dry bulb temperature tends to prevent cooling. Other limitations include the inability to operate below 32°F (0°C) because of freezing and the inconvenience that it requires a continuous source of water to keep the wick wet.

Calculation of Relative Humidity

Relative humidity can be calculated directly from the wet and dry bulb thermometer readings by using a steam table. However, the calculation is valid only for air at ambient conditions and should not be applied to other gases or if the temperature/pressure conditions differ significantly from ambient. Specific and relative humidity can be calculated by using Equations 8.32(1) through 8.32(4). Equations 8.31(1) and 8.31(2) are derived from the definition of specific humidity assuming water vapor in an ideal gas. Equation 8.31(3) is derived from the first law of thermodynamics. Equation 8.31(4) is the definition of relative humidity for an ideal gas.

$$S_2 = \frac{0.622 Pv_2}{P - Pv_2} \qquad \textbf{8.32(1)}$$

$$S_1 = \frac{0.622 Pv_1}{P - Pv_1} \qquad \textbf{8.32(2)}$$

$$S_1 = \frac{0.24(t_2 - t_1) + S_2 he_2}{hv_1 - hw_2} \qquad \textbf{8.32(3)}$$

$$\text{Relative Humidity (\%)} = \frac{Pv_1}{Ps_1} \times 100 \qquad \textbf{8.32(4)}$$

where

S_1, S_2 = specific humidity
t_1, t_2 = temperature
he_2 = enthalpy of evaporation
hv_1 = enthalpy of saturated vapor
hw_2 = enthalpy of saturated water
Pv_1, v_2 = partial pressure of water vapor
Ps_1 = saturation pressure
P = total gas pressure

Subscripts 1 and 2 refer to dry and wet bulb conditions, respectively. Values of Ps_1, Pv_2, hv_1, hw_2, and he_2 are obtained from a steam table.

Example Determine the relative humidity of air at atmospheric pressure when the dry and wet bulb thermometer readings are $t_1 = 80°F$ (27°C) and $t_2 = 60°F$ (16°C), respectively.

For t_1 and t_2 from the steam table,

$Ps_1 = 0.5069$ PSIA
$hv_1 = 1096.6$ BTU/pound mole
$Pv_2 = 0.256$ PSIA
$hw_2 = 28.06$ BTU/pound mole
$he_2 = 1059.9$ BTU/pound mole

and, therefore, the specific humidity, using Equation 8.32(1), is

$$S_2 = 0.622 \frac{0.256}{14.7 - 0.256} = 0.011 \qquad \textbf{8.32(1)}$$

$$S_1 = \frac{0.24\,(60 - 80) + 0.011\,(1059.9)}{1096.6 - 28.06} = 0.00642 \qquad \textbf{8.32(2)}$$

$$0.00642 = 0.622 \frac{Pv_1}{14.7 - Pv_1} \qquad \textbf{8.32(3)}$$

$$Pv_1 = 0.150 \text{ PSIA}$$

$$\text{Relative Humidity} = \frac{0.150}{0.5069} \times 100 \qquad \textbf{8.32(4)}$$

$$\text{Relative Humidity} = 29.6\%$$

If, instead of calculating, it is preferred to read the psychrometric chart (Figure 8.32a), a value of 30% relative humidity can be read.

Hair Hygrometers

The principle of measurement utilized by this device is based on the change of length of certain organic and synthetic fibers when they are exposed to a moist atmosphere. A mechanical

© 2003 by Béla Lipták

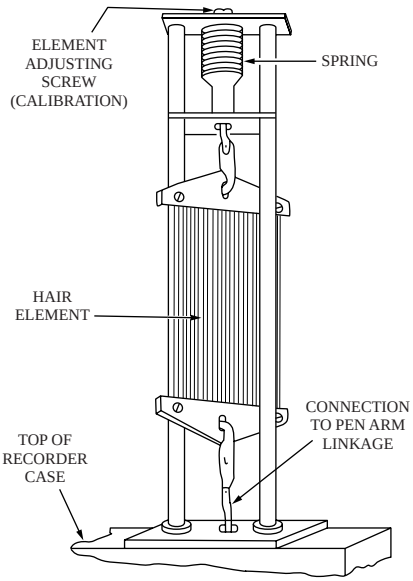

FIG. 8.32f
Hair hygrometer element.

linkage is used to amplify the movement of the element movement to amplify the readout.

Figure 8.32f shows a hair hygrometer consisting of several fibers mounted together to form a band; one end of the band is fixed while the other end is free to move, driving a pen arm through a linkage. Hair hygrometers, similar to wet and dry bulb hygrometers, require good circulation of the measured gas. In ducts, there is generally adequate gas velocity to ensure a dependable measurement; however, if the instrument is to be mounted in a room, the location must be carefully chosen.

The instrument should not be mounted near doors or other openings where it will be exposed to spurious drafts; flush mounting on a panel should be avoided, because the atmosphere in the back of the panel is stagnant. The hair element can be mounted on the top or back of the instrument case, depending on the installation. The element can also be mounted on an extension in the back of the instrument so that the sensing portion is in the room or compartment where relative humidity is to be measured while the readout device is surface mounted on the wall outside. Recorders are generally available as two-pen instruments, with the second pen recording temperature.

Transmitters are available in both digital and analog designs, and the analog ones can be electronic or pneumatic. Figure 8.32g shows a pneumatic transmitter with the fiber element connected to a nozzle-baffle bleed to vary air output pressure as a function of relative humidity. The transmitting units can be installed in a room or directly in a duct.

Cellulose Hygrometers

Cellulose strips and other shapes are also used to measure humidity. Like human hair and synthetic materials, cellulose changes its dimensions as the water vapor concentration

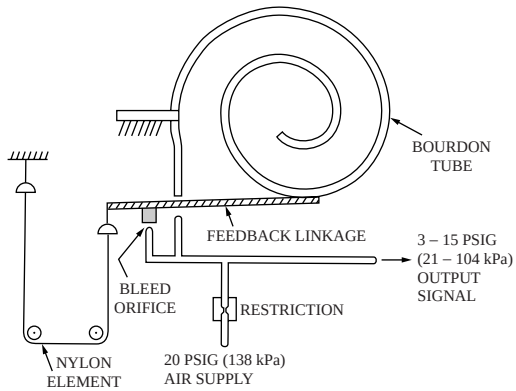

FIG. 8.32g
Schematic arrangement of hygrometer transmitter.

varies. This elongation has been used to build dial and digital indicators and also relatively inexpensive HVAC-type thermostats, transmitters, and recorders. The operation of the cellulose element instruments is similar to the previously described human hair hygrometers.

Solution Resistance Elements (Dunmore Cells)

The Dunmore sensor consists of a wire grid on an insulating substrate that is coated with lithium chloride solution. Lithium chloride is hygroscopic and therefore takes up moisture from the air. The resulting resistance of the sensor is an indication of the relative humidity in the air. One disadvantage of this otherwise widely used, inexpensive, and good sensor is its narrow range.

Figure 8.32h illustrates the ranges of ten color-coded elements that are used by one manufacturer to cover the full range of 0 to 100% RH. Wide-range Dunmore sensors can be configured by placing several narrow-range elements in a single housing and connecting them to a microprocessor-based readout.

Polystyrene Surface Resistivity (Pope Cells)

The Pope cell is similar to the Dunmore element but, instead of lithium chloride solution, it uses polystyrene as a substrate for the conductive wire grid. In this design, the polystyrene is treated with sulfuric acid, which produces a thin hygroscopic layer on its surface. Changes in humidity cause large changes in the impedance of this layer and, because the operating portion of the sensor is only its surface, its speed of response is fast—only a few seconds. An AC-excited Wheatstone bridge circuit can be used to measure the impedance. The output signal is nonlinear and can cover a range of 15 to 99% RH. This type of humidity probe can be mounted on the wall or in ducts (Figure 8.32i).

Thin-Film Capacitance

Most manufacturers use some form of a capacitance measurement to detect humidity or dew point in air.

© 2003 by Béla Lipták

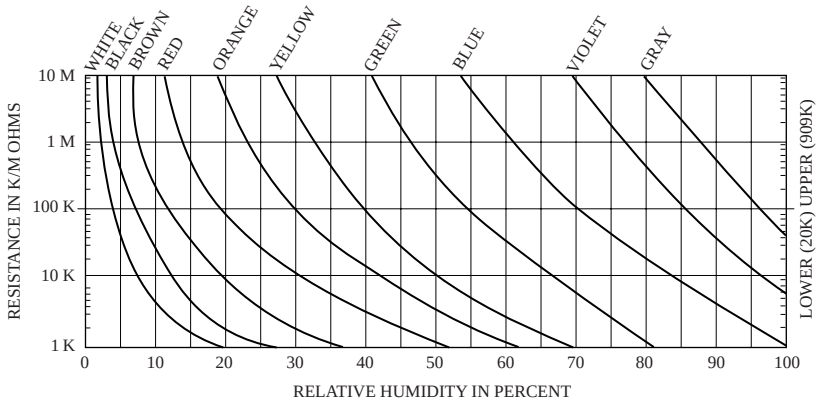

FIG. 8.32h
The resistance to relative humidity relationship of ten color-coded Dunmore sensing elements. (Courtesy of Ohmic Instruments Co.)

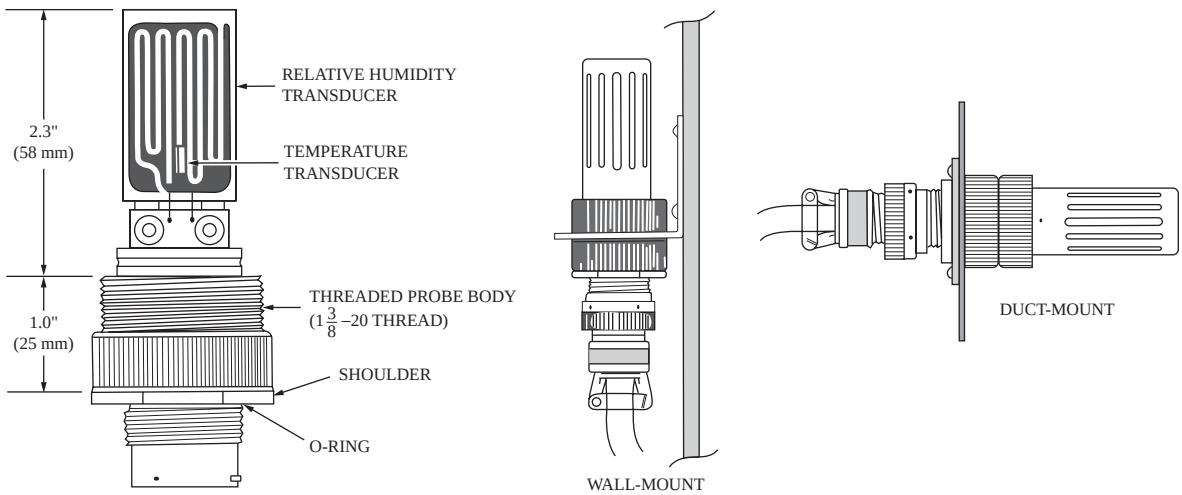

FIG. 8.32i
Polystyrene surface conductivity humidity element. (Courtesy of General Eastern, used to be Phys-Chem Scientific Corp.)

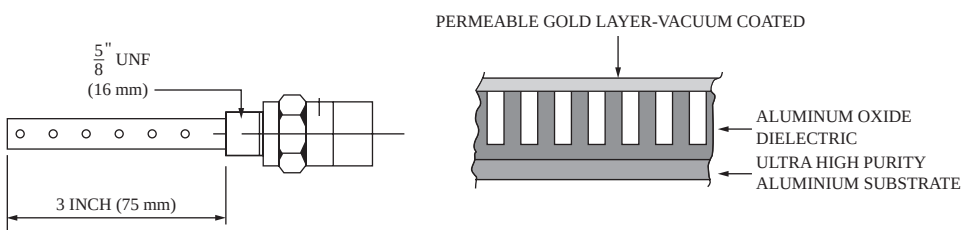

FIG. 8.32j
Thin-film aluminum oxide capacitance element, which can be packaged as a probe. (Courtesy of Michell Instrument Ltd.)

Metal Oxide Sensor One variation is to form a capacitor by depositing a layer of porous aluminum oxide on a conductive aluminum substrate and coating the oxide with a thin film of condensation from evaporated gold. The aluminum substrate and the gold film serve as the electrodes of the capacitor (Figure 8.32j).

When exposed to air, the water vapors pass through the gold layer into the aluminum oxide dielectric and are absorbed by it. The amount of water absorbed determines the capacitance registered by the sensor. Some suppliers "dope" the aluminum oxide dielectric with lithium chloride to extend its range down to dew points of –94°F (–70°C). The disadvantages of lithium chloride doping include the need for individual calibration, the slowing of the response, and the potential for shorting due to condensation.

The accuracy of the aluminum oxide moisture sensor is low, each sensor requires a separate nonlinear calibration curve, and the unit must be periodically recalibrated to

© 2003 by Béla Lipták

compensate for aging and contamination. These sensors are designed for low dew-point measurements but can be disabled if exposed to high humidity or if wetted. The advantages of these sensors include their small size, their probe-type packaging, and the fact that their measurement range is wide and well suited for the detection of low dew points. As a consequence of these characteristics, they are widely used in such applications as HVAC, where cost is the primary concern, and measurement accuracy is not critical.

Polymer Sensor Design variations of the capacitance-type humidity sensor include the replacement of aluminum oxide dielectric with hygroscopic polymer dielectrics. These units consist of a capacitive polymer sensor bonded to a resistive temperature sensor. The polymer sensor detects humidity directly, while dew point is calculated by a microprocessor, which also reads the temperature. These sensors are claimed to provide better linearity and allow the use of longer lead wires because their low-frequency operation reduces the effects of stray capacitance. Other advantages include resistance to contamination by various chemical vapors.

Polymer sensors are immune to condensed water and therefore can have a wider range than metallic oxide ones. These units are available as transmitters with intelligent electronics, are capable of detecting low dew points, and require less maintenance as a result of their stability.

Autocalibration During autocalibration, the sensor is heated and then, as it cools down to ambient temperature, both the humidity and temperature values are monitored. It is thereby evaluated to determine whether the humidity reading at 0% RH is correct. If it is not (Figure 8.32k), the drift is corrected by the microprocessor. This autocalibration allows the readings of low dew-point values down to –96°F (–60°C) with errors under ±2°C.

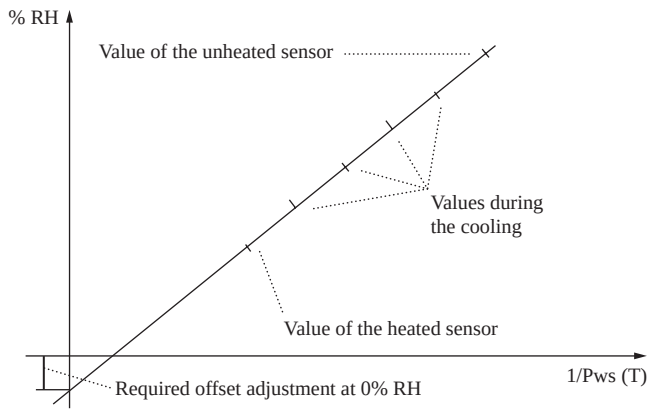

FIG. 8.32k
As the sensor cools to ambient, the RH reading is used to determine the required offset adjustment, which is read where the reading crosses the RH axis. Pws is the temperature dependent saturation pressure of the water vapors. (Courtesy of Vaisala Oyj.)

Figure 8.32l illustrates another design variation that is a combination dew point and dry bulb temperature transmitter, capable of operating at up to 350 PSIG (25 bars) pressure and up to 365°F (185°C) temperature.

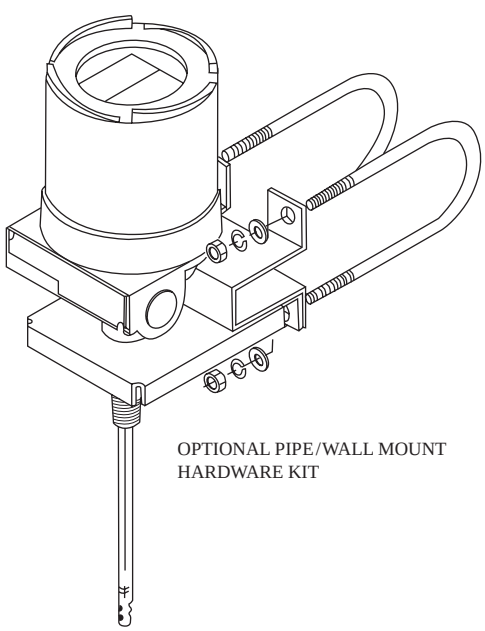

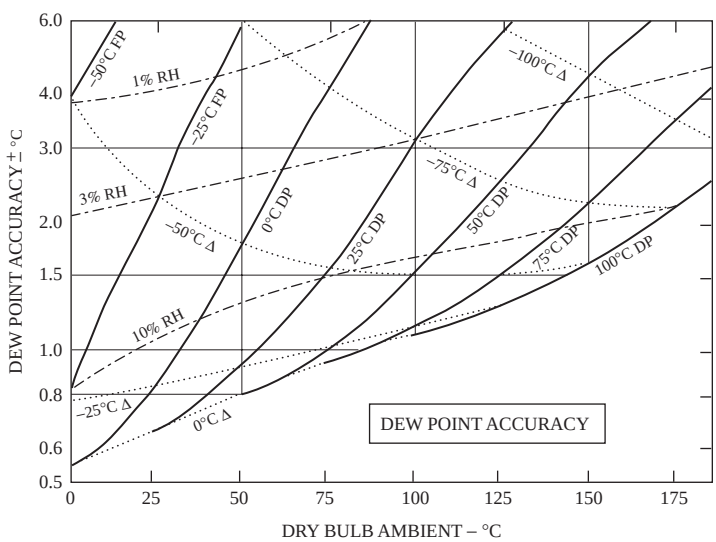

FIG. 8.32l
Packaging and accuracy of combination dew-point and temperature transmitter capable of operation at 365°F (185°C). (Courtesy of Honeywell, used to be Hy-Cal Engineering)

© 2003 by Béla Lipták

DEW-POINT HYGROMETERS

The temperature at which water starts to condense on a surface (the dew point) can be measured from –112 to 212°F (–80 to 100°C). The dew-point reading of an air sample is affected by the air pressure and by the amount of water vapor in the sample. An increase in air pressure increases the dew-point reading, whereas the temperature of the air does not affect it.

The three most widely used sensors for the detection of dew point are (1) aluminum oxide or polymer sensors, (2) lithium chloride saturated salt sensors, and (3) surface condensation type sensors. The aluminum oxide and polymer type thin-film capacitance designs have already been discussed under RH sensors. Therefore, here, the solution-conductivity type, lithium chloride detectors will be discussed first.

Solution-Conductivity Type

All solids condense and absorb minute quantities of water on their surfaces. If the solid is soluble, a layer of saturated solution is formed whose vapor pressure is lower than that of pure water at the same temperature. Some solids form saturated solutions in water whose vapor pressure is less than the partial pressure of water vapor in the atmosphere contacting the solution. When that is the case, water vapor will continue to condense until the vapor pressure of the solution equals the partial pressure of the water vapor. On the other hand, water vapor will evaporate from the solution should the water vapor partial pressure decrease below the vapor pressure of the solution. Under steady-state conditions, solution vapor pressure equals water vapor partial pressure, and knowledge of the former can be used to determine the moisture content of the atmosphere.

The sensing element consists of thin-walled, hollow-metal socket wrapped with tape impregnated with salt crystals (lithium chloride). Two wires are wrapped over the tape and connected to a regulated AC voltage source. The salt crystals complete the electric circuit between the wires. When the sensing element is exposed to the sample atmosphere, water condensing on the crystals forms an ionic solution, which permits an electric current to flow between the wires.

This current, in turn, heats the solution and raises its vapor pressure. As more water condenses, more current flows, resulting in a further increase of the solution vapor pressure until equilibrium is reached. On decreasing moisture content of the measured gas, water evaporates from the element, decreasing the current flow and resulting in a new equilibrium at a lower solution vapor pressure. A temperature sensor inside the hollow socket is used to detect sensor temperature and to provide a signal for readout.

The output calibration can be in terms of dew-point temperature, water vapor pressure, or specific humidity. Values of specific humidity must be corrected for the pressure variations of the sample. The correction factor is $(P_c - P_s)/(P - P_s)$, where P_c is the sample pressure the instrument is calibrated for, P_s is the water saturation pressure at the sample dew point, and P is the actual process pressure. Relative humidity is obtained by the use of a chart converting sample operating and dew-point temperature readings to percent relative humidity. Therefore, a sample temperature measurement is required if moisture level in terms of relative humidity is desired (Figure 8.32m).

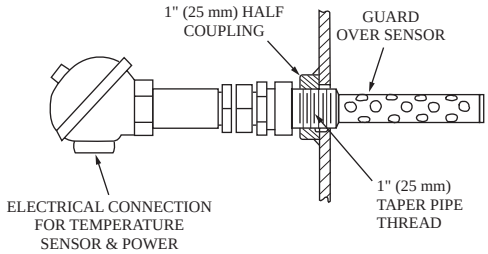

FIG. 8.32m
Solution conductivity probe with resistance temperature element.

Installation The instrument does not require a high-velocity sample to perform satisfactorily; in fact, sample velocity in excess of 1 ft (0.3 m) per second will result in a poor measurement and shortened element life. The reason is evident when one considers the measurement principle involved, namely, the change of solution vapor pressure and temperature on the sensing element by heating to establish equilibrium with the sample. At high sample velocities, connective heat losses swamp the measurement signal, and operation at higher power causes a reduction of element life.

The sensing element therefore must be located in a relatively quiescent zone or must be protected from direct impingement of the sample. In ducts, a sheet metal hood installed over the element and open on the downstream side is adequate. In pipelines, the element can be installed through the side outlet of a tee or can be mounted separately in a sampling chamber piped to the process line. The latter installation is preferred for samples under pressure, because the element can be services without shutting down the pipeline (Figure 8.32n).

Sampling System A sampling system is required when (a) the sample temperature is above the operating limit of the sensing element [operating limit approximately 200°F (93.3°C)], or (b) the process line cannot be shut down for maintenance of the element.

When the process temperature is above the operating temperature limit of the sensor, a sample cooler must be installed upstream of the measuring element. The sampling system must be designed so that the sample will never be cooled to its dew point under any possible process or ambient conditions. Sample tubing should be small in diameter. The sensing element is to be mounted in a larger diameter sampling chamber, as shown in Figure 8.32o, to reduce sample velocity at the element.

© 2003 by Béla Lipták

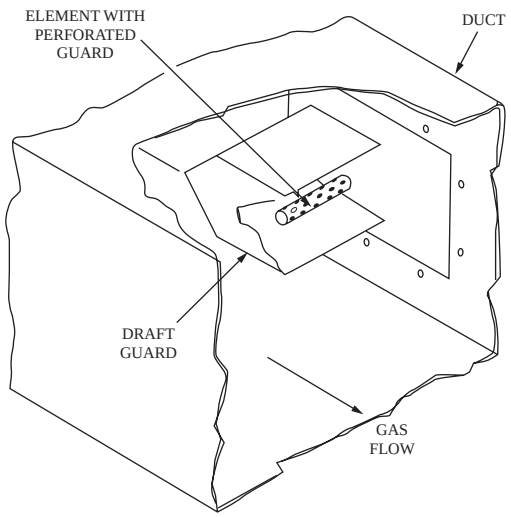

FIG. 8.32n
Duct installation with draft guard.

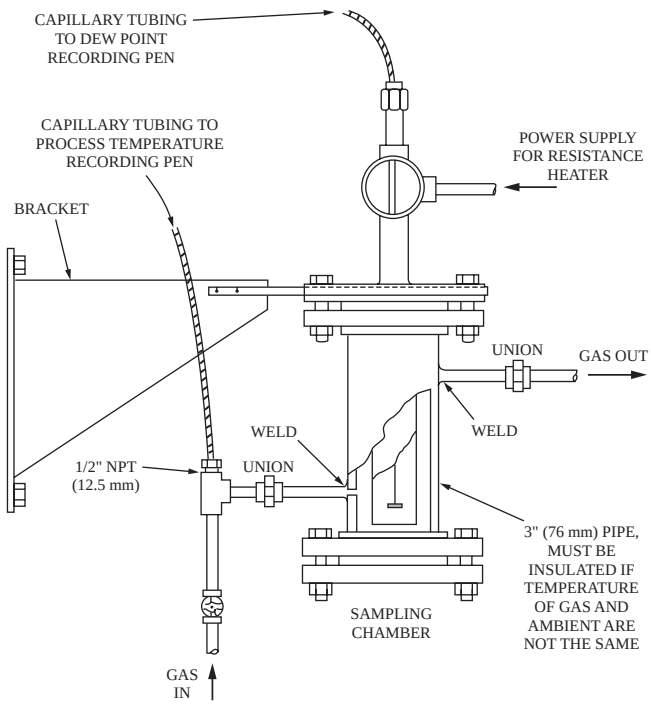

FIG. 8.32o
Probe installed in sampling chamber.

The sensor requires periodic maintenance and must be removable from the line. Whenever such removal would result in a process shutdown, the sensor should be installed in a separate sampling chamber and shutoff valves provided in the sample piping.

Limitations The instrument can be used on all noncorrosive gases that do not react with the salt crystals or water. Specifically, such gases as ammonia, sulfur dioxide, sulfur trioxide, and chlorine react with water, and this instrument is therefore not applicable for such service. The instrument is not suitable for samples containing diethylene glycol or triethanolamine, is relatively slow in its response, and cannot detect relative humidity under 12% RH (Figure 8.32a).

Condensation on a Chilled Surface

The temperature of a surface is at dew point when the first molecular layer of condensation appears on it. Dew-point sensors of this type can be grouped according to the method used to detect the appearance of this condensate into conductivity and optical (mirror) types.

Surface Conductivity Type Every object in a moist atmosphere has water molecules on its surface. The concentration on these molecules is related to the temperature of the object and to the dew point of the atmosphere. If the temperature of the surface is above the dew point of the atmosphere, the thin layer of the water molecules will be invisible. However, as the surface is cooled to the dew point, the density of water molecules at the surface becomes so great that water condenses on the surface, and dew can be seen.

At surface temperatures above the dew point, the moisture density at the surface can be detected electrically, although the water vapor is not visible to the eye. This water vapor will permit a current to flow on the surface of even an excellent insulator. This current flow is a function of the surface material and moisture density at the surface. For a given material and fixed applied potential, the current will increase logarithmically as the surface temperature decreases to the dew point of the atmosphere. Below the dew point, the logarithmic relationship does not hold, and thus surface conductivity can be related to a dew point. Of course, dew formation can also be observed optically; however, visual observation is more difficult, because dew will form at or below the dew-point temperature, whereas conductivity is a continuous function of temperature.

The measuring element consists of a highly polished inert surface inlaid with an intermeshed gold grid and a thermocouple imbedded in the surface. A fixed potential is maintained across the gold grids, and the current flow is compared to the reference current flow at dew point. This signal is amplified and used to modulate a cooler so that the surface is maintained at the dew point of the sample. The cooler is a bismuth-telluride crystal that pumps heat away from the sensor when electric power is supplied to it.

From the thermocouple imbedded in the surface, the output is normally presented as dew-point temperature; however, readout in terms of relative or specific humidity is also possible (Figure 8.32p).

Sampling System A sampling system is required where the sample gas is outside the operational limits of the instrument. At high temperatures, a sample cooler is required to bring the sample temperature below the operating limit of the sensor. The sample cooler, however, must be chosen so that the sample will never be cooled to its dew point under any

© 2003 by Béla Lipták

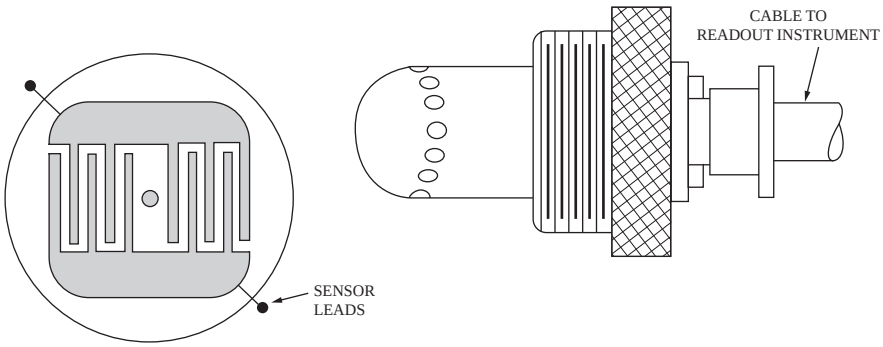

FIG. 8.32p
Sensing surface and housing of the surface conductivity type dew-point detector.

possible operating or ambient condition. At high sample pressures, a pressure-reducing valve is required. For measurement of stagnant atmospheres, low-pressure samples, or closed systems, a pump may be required to draw the sample over the sensor.

Limitations The instrument can be used with all the common atmospheric gases such as nitrogen, oxygen, and carbon dioxide. The instrument is unsuitable for samples containing components that react with water, such as chlorine or sulfur dioxide, and components with a dew point higher than that of water.

The main advantages of this design include its wide range; its accuracy, which is limited only by the quality of the thermometer used to detect the temperature of the cooled surface; and its self-calibrating nature. Self-calibration is achieved by allowing the surface to heat up and then checking whether, upon recooling it, the dew point detected is the same value as before. Cooling or heat-up rates are reasonably fast—about 3°F (1.5°C) per second.

Chilled-Mirror Type The optical chilled-mirror dew-point technique is a fundamental measurement, because the saturation temperature determines the saturation partial pressure of the water vapor. These relationships have been experimentally and theoretically determined and tabulated by Goff and Gratch, Keenan, and Keyes,[3] and in the Smithsonian tables,[4] and they are constantly being refined. The Smithsonian tables, in particular, are used by the National Institute of Standards and Technology (NIST, formerly the National Bureau of Standards) as the reference documents for humidity sensor calibration. They list the saturation vapor pressures over plane surfaces of pure water and pure ice corresponding to the equivalent dew points or frost points. Once the water vapor partial pressures are determined, all definitions encountered in humidity as outlined earlier can be conveniently expressed.

Figure 8.32q illustrates that, at equilibrium partial pressure, when the gas mixture is saturated with water ice, the rate of water molecules leaving the atmosphere and condensing on the chilled surface is the same as the rate of water

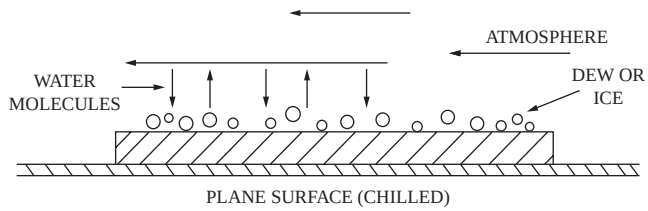

FIG. 8.32q
Equilibrium partial pressure illustration.

molecules leaving the chilled surface and reentering the atmosphere. At equilibrium saturation, the water vapor partial pressure of the condensate is equal to the water vapor partial pressure of the gas atmosphere. To establish this dynamic equilibrium at the mirror surface, it is necessary to precisely cool and control the mirror at the saturation temperature. A temperature element is then placed in thermal contact with the mirror, and the mirror temperature is utilized directly as the dew-point or saturation temperature.

Cooling Methods Historically, the cooling of the mirror surface has been accomplished with acetone and dry ice, liquid CO_2, mechanical refrigeration, and, more recently, thermoelectric heat pumps. Detection of the condensation has been observed visually, and the equilibrium cooling is manually controlled. Newer versions utilize optical phototransistor detection designs to control automatically the surface at the dew point or frost point. The temperature instrumentation has included the entire spectrum from glass bulb thermometers to all types of electrical temperature elements.

The manually cooled, visually observed hygrometer is commonly known as the *dew cup.* It is a relatively inexpensive technique, and, when operated by an experienced and skilled technician, it is quite accurate. However, it does suffer from some limitations.

1. It is not a continuous measurement.
2. It is operator dependent, so readings may vary from operator to operator.
3. Versions using expendable coolants require replacement supplies.

© 2003 by Béla Lipták

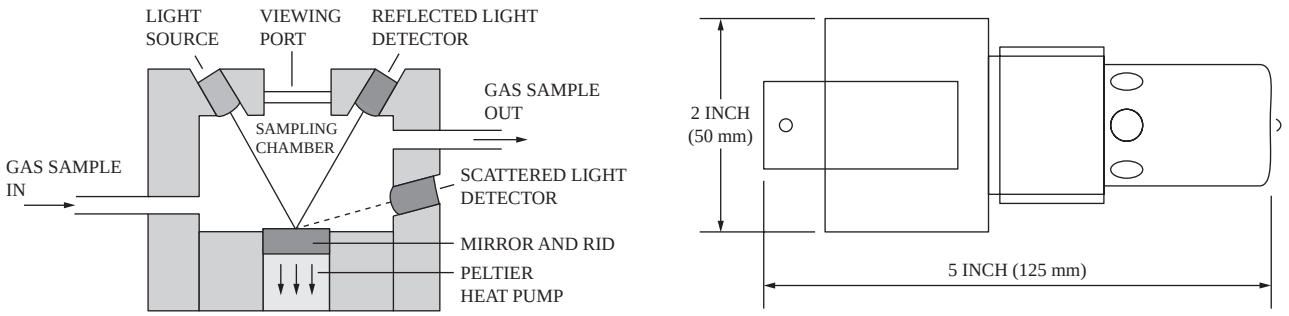

FIG. 8.32r
The cooled-mirror-type sensing element and the probe protector that houses it. (Courtesy of Michell Instruments Ltd.)

All of these difficulties are overcome by the thermoelectrically cooled, optically observed dew-point hygrometer. An instrument of this type is shown in Figure 8.32r. The mirror surface is chilled to the dew point by a thermoelectric cooler while a continuous sample of the atmosphere gas is passed over the mirror. The mirror is illuminated by a light source and observed by a photodetector bridge network. As condensate forms on the mirror, the change in reflectance is detected by a reduction in the direct reflected light level received by the photodetector because of the light-scattering effect of the individual dew molecules. This light reduction forces the optical bridge toward a balance point, reduces the input error signal to the amplifier, and proportionally controls the drive from the power supply to the thermoelectric cooler. This continuously maintains the mirror at a temperature at which a constant-thickness dew layer is retained. Independently, embedded within the mirror, a temperature-measuring element measures the dew-point temperature directly.

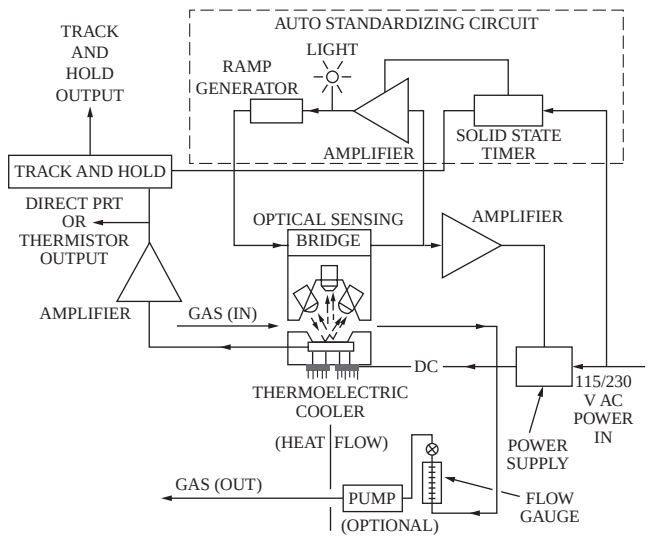

FIG. 8.32s
Automatic standardization (balance) circuit.

Automatic Standardization An additional feature of the optical hygrometer that renders it suitable for long periods of unattended operation is the automatic standardization (balance) feature, as shown in Figure 8.32s. Since moisture on the mirror surface can coexist in equilibrium with the gas adjacent to the mirror at only one unique temperature (i.e., the dew-point temperature), the measurement of the mirror temperature is a fundamental and primary measurement of dew-point temperature. However, the control loop is sensitive to change in reflectance from the mirror surface and, therefore, may be susceptible to changing baseline reflectance as a function of contamination. For this reason, the instruments are equipped with a balance mode whereby the optical bridge output may be readjusted for changing dry mirror reflectance characteristics on a time-sequential basis.

Limitations The limitations of the optical dew-point hygrometer are (1) the sampling system, (2) the depression capability of the instrument, and (3) the absolute dew point being monitored. In the sampling system, considerations of leakage, pressure and temperature gradients, and moisture absorption/desorption characteristics must be considered.

The problem of leakage is relative; that is, if the dew point being measured is close to the ambient dew point, leakage into the system may not bias the reading substantially. If the system is pressurized above atmospheric pressure so as to create a leakage out of rather than into the system, the error introduced will be less.

The temperature stability of the sampling system components is also quite important. For any given equilibrium sampling condition, a specific amount of moisture will be absorbed onto the sampling system wetted surface, so control of the sample line temperature may be necessary to ensure an equilibrium condition.

Of equal importance is the effect that material absorption/desorption characteristics have on overall system response. Stainless steel and nickel alloy tubing are the best nonhygroscopic materials and should be used for dew points from 0 to –100°F (–17 to –73°C). Copper, aluminum alloys, Teflon,® and polypropylene are suitable above –20°F (–29°C) dew point. Most other plastic and rubber tubing is unacceptable in all ranges.

The depression capability of the instrument is a function of the size and efficiency of the thermoelectric cooler. Recent advances in the technology of the thermoelectric coolers have made possible for the first time a practical instrument utilizing

© 2003 by Béla Lipták

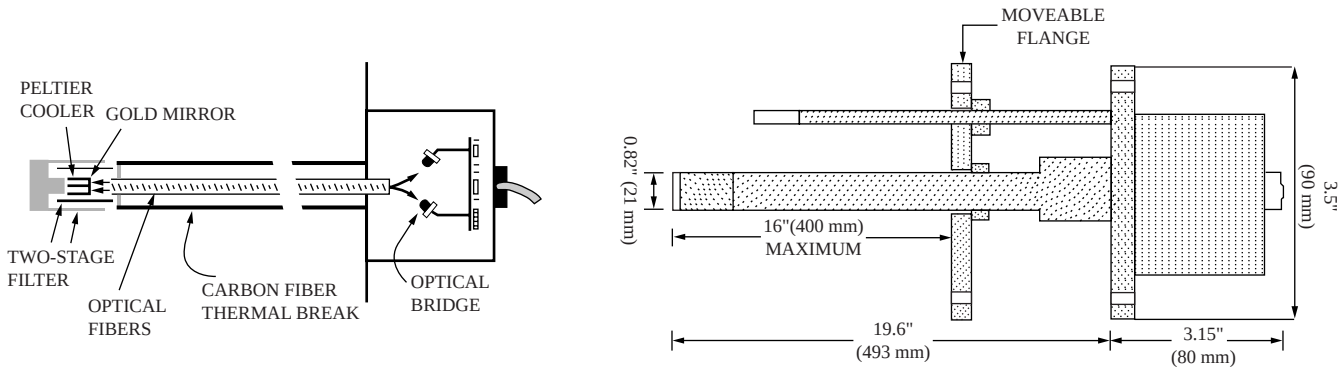

FIG. 8.32t
Cycled, fiber-optic, chilled-mirror probe. (Courtesy of Protimeter.)

three serial stages of thermoelectric cooling, capable of depression in excess of 160°F (71°C). Thus, newer instruments are capable of monitoring virtually all dew-point ranges encountered in current industrial processes.

The final limitation on the optical hygrometer is the absolute amount of moisture available in a gas sample. At –100°F (–73°C), or 1.5 ppm water vapor, the time required to stabilize on a frost point is dependent on the sample flow rate to the hygrometer. This type of instrument requires a very small flow rate to provide a continuous monitoring capability and is not sensitive to flow within a specified range. However, at very low frost points, it is advisable to increase the sample flow rate to provide more samples because of the very low percentage of water vapor available.

Cycled Chilled-Mirror Probe Figure 8.32t illustrates the probe design of the cycled chilled-mirror-type dew-point detector. The advantages of cycling the mirror temperature include simplicity, which also reduces the cost, and lower maintenance, because by making the periods of dew formation short (5% of the time), the probability of contaminant condensation on the mirror surface is also reduced. The mirror surface is visually monitored by a fiber-optic link.

The sensor is protected by an outer (25 μm) and inner (1 μm) filter. The unit is also provided with a dry bulb temperature sensor. The error in temperature measurement is about 0.2°F (0.1°C), and the error in dew-point measurement is 1°F (0.5°C) over a dew-point range of 68 to 185°F (20 to 85°C). An integral pressure sensor is also available to provide dew-point compensation from vacuum to 150 PSIG (10.7 bars).

MOISTURE INDICATORS

Sometimes it is desirable to detect only a change in the amount of moisture in the sample, while the exact concentration is of only secondary importance. Such may be the case on the outlet of drying beds where moisture breakthrough will indicate the need for regeneration. Certain salt crystals indicate the presence of moisture by a change in color, and these are the most economical methods for detecting changes of moisture level. The crystals are packed into a small chamber with a glass window for observation of the color. A sample side stream is piped through the chamber, and increase of moisture in the sample is indicated to the operator by a color change.



FIG. 8.32u
Portable Dew Point Analyzer. (Courtesy of Nova Analytical Systems Inc.)

Microprocessor-Based Indicators

The capacitance-type elements are used in portable, battery-operated indicators or in microprocessor-based instruments that are capable of displaying the moisture content of the air in %RH, ppm, or dew-point units. These sensing elements are also packaged as wall- or duct-mounted transmitters for both HVAC and process industry applications. The probe-type designs can also be used to measure the water content of hydrocarbons and other liquids, as will be discussed in the next section.

For checking dew points in furnace atmosphere gases, transmitting indicators are available with built-in sampling pumps and 4- to 20-mA outputs (Figure 8.32u).

© 2003 by Béla Lipták

CONCLUSION

The instruments discussed above are generally applicable to such easy-to-handle fluids as the atmospheric air. Operating temperature and pressure are usually limited to near atmospheric conditions although, with some designs (such as capacitance), the operating limits can be extended. The principal feature common to all the above instruments is that the output signal is not related directly to moisture content but to a parameter that is related to moisture content. Accuracy varies widely depending on design. The best accuracy can be obtained with the surface condensation hygrometers. Sampling systems are usually not required, as most designs are available in the probe form.

References

1. Wiederhold, P. R., Which humidity sensor? *Instrum. Contr. Syst.*, June 1978.
2. Tannermann, J., Getting a grip on humidity, *InTech*, August 2002.
3. Keenan, J. H. and Keyes, F. G., *Thermodynamic Properties of Steam*, John Wiley & Sons, New York.
4. List, R. J., *Smithsonian Meteorological Tables*, 6th rev. edition, Publication No. 4014, Smithsonian Institution, Washington, D.C., Tables 93 through 97.

Bibliography

ACGIH, *Air Sampling Instruments for Evaluation of Atmospheric Contaminants*, 9th ed., Cincinnati, OH: American Conference of Governmental Industrial Hygienists, 2001.

AIHA, *Workplace Environmental Exposure Level Guide Series, Full Set of 109 Individual Guides on Toxic Chemicals*, Akron, OH: American Industrial Hygiene Association, 1979–2002.

Cole, K. M. and Reger, J. A., Humidity calibration techniques, *Instrum. Contr. Syst.*, January 1970.

Cooper, F. G., Dew point vs. frost point measurements, *Sensors*, October 1991.

Cortina, V. B., Sampling systems for dew point hygrometers, *InTech*, March 1985.

Dadchauji, F. and Webster, S., Humidity instrumentation tubes or high temperatures, *Control*, January 1992.

Irving, C. L. and Higgins, C. T., HVAC System Design Narrows RH Control to ±1%, *Control Eng.*, 27(11), 150, 1980.

Kohler, H. M. and Mathew, A., Continuous *in-situ* and elevated temperature moisture measurement in high particulate reactive processes, *Proc. ISA 1996 Conference*, Paper 96–002.

Krigman, A., Moisture and humidity, *InTech*, March 1985.

McKinley, J. J., Using permeation tubes to create trace concentration moisture standards, National Conference of Standards Laboratories Conference, Atlanta, GA, July 1997.

Mettes, J. et al., Multipoint ppm moisture measurement using electrolytic cells, ISA Conference, Houston, October 1992.

Meyers, R. A., Ed., *Encyclopedia of Analytical Chemistry: Instrumentation and Applications*, New York: John Wiley & Sons, 2000.

Moisture/humidity, *Meas. Contr.*, February 1992.

Petersen, K. L., Portable dew-point generator, *Meas. Contr.*, February 1992.

Schultz, G., Relative humidity measurement with an analog transmitter, *Meas. Contr.*, December 1992.

Sherman, L. H., Sensors and conditioning circuits simplify humidity measurement, *EDN*, May 16, 1985.

Shinskey, F. G., Humidity, dew point and wet-bulb temperature, *Instrum. Cont. Syst.*, 43, July 1975, and 15, August 1975.

Tannermann, J., Getting a grip on humidity, *InTech*, August 2002.

Wiederhold, P. R., Cycling chilled-mirror hygrometer, *Meas. Contr.*, February 1993.

Wiederhold, P. R., Humidity measurements, *Instrum. Technol.*, 45–50, August 1975.

Yan, W. B. and Mallon, T., breakthrough technology measures parts-per-trillion moisture in gases, *Chem. Res.*, February/March 2002.

© 2003 by Béla Lipták

8.33 Moisture in Gases and Liquids

A. BRODGESELL (1969, 1982) **B. G. LIPTÁK** (1995)
J. F. TATERA (2003)

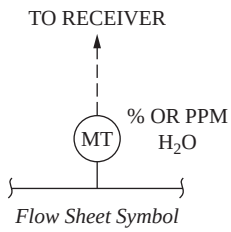

Flow Sheet Symbol

Types of Designs:
A. Electrolytic hygrometer
B. Capacitance
C. Impedance
D. Piezoelectric
E. Heat of adsorption
F. Infrared (IR)
G. Microwave
H. Karl Fischer titrator (discussed under laboratory)
I. Drying oven (laboratory)
J. Dipole
K. Cavity Ring Down
L. Neutron
M. Calibrators

Ranges:
A through G, see Table 8.33a
H. 10 ppm to 100%
I. Usually in %
J. 0.1 to 100%
K. ppt to ppm levels
L. 0 to 60%

Inaccuracy:
A. 2 to 5% FS
B and C. 3%
D. 10% of actual reading or 2 ppm by volume, whichever is greater
F. 2% FS
G. For a 1 to 15% moisture range, error is within 0.5%
H and I. 0.5 to 1%

Costs:
(For moisture in air and relative humidity sensors, also refer to Section 8.32.)
A. $6,000 to $15,000 with sample system
B and C. $2,000 to $10,000 for thin-film probe, $2,000 to $20,000 for flow-through bypass analyzer
D. $5,000 to $40,000
F, G. $10,000 to $15,000
H. $10,000 to $20,000
I. $10,000 to $15,000
J. $20,000 to $27,000
K. $20.000 to $40,000
L. $15,000 to $25,000
M. $2,000 to $5,000

Partial List of Suppliers:
(For moisture measurement in air and solids, also refer to Sections 8.32 and 8.34)
Ametek Inc. (www.ametek.com) (D, F)
Anarad Inc. (www.anarad.com) (F, M)
Arizona Instrument Corp. (www.azic.com) (B, I, H)
CEM Corp. (www.cem.com) (G)
Cosa Instrument Corp. (www.cosa-instrument.com) (B, H)

© 2003 by Béla Lipták

CSC Scientific CO. Inc. (www.cscscientific.com) (B, H)
Delta-F (www.delta-f.com) (F)
Denver Instrument Co. (www.denverinstrumetn.com) (F, H)
Dewcon Instruments Inc (Division of KO-EN Technologies ab) (www.dewcon.com) (J)
Elan Technical Corp. (www.elan.thomasregister.com) (G)
Endress + Hauser Instruments (www.endress.com) (B)
Foss NIR Systems Inc. (www.foss-nirsystems.com) (F)
General Eastern Instruments (www.geinet.com) (B, C, M)
Illinois Instruments Inc. (www.illinoisinstrumetns.com) (A)
Kahn Instruments Inc. (www.kahn.com) (A, B)
Kay-Ray/Sensall/Rosemount (www.emersonprocess.com) (G)
Kin-Tek Laboratories Inc. (www.kin-tek.com) (M)
Luft Instruments Inc. (H)
MEECO Inc. (www.meeco.com) (A)
Michell Instruments (www.michell-instruments.com) (B)
Nova Analytical Systems Inc. (www.nova-gas.com) (B)
Ophir Corp. (www.ophir. com) (F)
Panametrics Inc. (www.panametrics.com) (B, C, M)
Rosemount Analytical Inc. (www.emersonprocess.com) (B)
Teledyne Analytical Instruments (www.teledyne-ai.com) (B, F)
Testo Inc. (www.testo.de or .com) (B)
Thermo Electron Corp. (www.thermo.com) (F, L)
Tiger Optics LLC (www.tigeroptics.com) (K)

Most Popular: Panametrics, Ametek, General Eastern, and Endress & Hauser

INTRODUCTION

There is a certain amount of overlap between the three sections that are devoted to the subject of moisture measurement in this handbook. (Section 8.32 describes the measurement of moisture in air; Section 8.33, in liquids and gases; and Section 8.34, in solids.) Some of the instruments, such as the chilled-mirror or the thin-film capacitance-type sensors discussed in Section 8.32, can operate not only as dew point or humidity sensors in air but also as moisture analyzers in other gases. Similarly, the electrolytic hygrometer, which is discussed in this section, could also be used to measure humidity or dew point in air. Similar overlaps exist between the coverage of this section and Section 8.34, dealing with moisture in solids, particularly with respect to microwave, neutron, and infrared analyzers. The reader is also reminded that separate sections are devoted to some of the analyzers that can also be used for other analytical tasks besides moisture detection, such as infrared (Section 8.27) and autotitrators (Section 8.66). The reader is advised to refer to these sections as well for additional information concerning their suppliers and features.

LABORATORY ANALYZERS

An old but still useful method of determining the moisture of a sample is to heat it and measure the resulting weight loss. Some drying ovens are provided with built-in weight scales and displays that indicate the sample moisture content directly in weight percentage. The reliability of this technique is primarily a function of the presence or absence of volatile materials other than water and the weighing procedure. Some built-in scale oven systems even have experience issues with the weighing procedure and air current effects on the sample holders.

Another widely used and accurate (sensitive to 5 ppm) method of moisture analysis in gas or liquid samples is by titration. The reagent is referred to as the Karl Fischer reagent, which consists of a solution of sulfur dioxide, iodine, and pyridine in methanol. The titration end points can be found automatically (see Section 8.66) by the measurement of the current flow through the solution. Recent concerns regarding the toxicity of pyridine have led to the use of substitute buffers like imidazole. The iodine water reaction is the same, and it is still classified as a Karl Fischer titration.

PROCESS ANALYZERS

Some of the industrial process analyzers are of the probe type (capacitance, fiber-optic infrared probes), others can look through the process stream in the pipe (microwave), and the majority require some form of a sampling system. Table 8.33a provides a summary of the ranges and other features of many of the process moisture analyzers. The subject of sampling (which has already been covered to some extent in Sections 8.2, 8.3, and 8.12) will also be addressed in the next section.

Sampling Systems

Some sampling system features are peculiar to moisture analyzers, and these are covered below. The function of any sampling system is to deliver a clean, appropriately representative

© 2003 by Béla Lipták

TABLE 8.33a
Summary of Moisture Analyzer Features

Type	*Range*	*Sample Phase*	*Sample System Required*	*Remarks*
Electrolytic hygrometer	0–2 to 0–2000 ppm	Clean gas Special sampling for liquids	Yes	Sample flow must be constant
Change of capacitance	0–10 to 0–1000 ppm	Clean gas or liquids	*	Sample temperature must be constant
Impedance type	0–20,000 ppm	Clean gas or liquids	No, only for liquids	Sample temperature of liquids must be constant
Piezoelectric type	0–5 to 0–25,000 ppm	Clean gas only	Yes	
Heat of absorption type	0–10 to 0–5000 ppm	Clean gas or liquid Special sampling for liquids	Yes	Sample flow must be constant
Infrared absorption	Gas: 10.1–100% Liquid: 6–100%	Gas, liquids, and slurries	**	
Microwave absorption	0–1 to 0–70%	Liquids, slurries, and pastes only	No	

*Available in probe form, but can be direct pipeline-mounted only if flow velocity is under 1.6 fps (0.5 m/s).
**Fiber-optic probe (FOP) designs can be direct pipeline-mounted without sampling.

sample to the measuring element at the required pressure, temperature, and flow rate. Measurement of moisture, although simple in principle, is complicated by the fact that most materials adsorb and desorb moisture.

At moisture levels in the percent range, moisture absorption is not normally a serious problem; however, at moisture levels in the low parts per million (ppm) ranges, sampling system materials must be selected so as to minimize their effect on the moisture concentration in the sample. Depending on the levels being monitored, materials that are less likely to interfere with the moisture content in the sample are stainless steels, Teflon,® Viton,® Kel-F,® nickel and nickel-plated materials, and cadmium and cadmium-plated materials. Materials that should almost always be avoided are copper and its alloys, rubber, neoprene, and elastomers in general.

It is important to apply the material considerations to all parts of the sampling system, including the internals of valves and filters.

Electrolytic Hygrometer

The principle of measurement utilized involves the electrolysis of water into oxygen and hydrogen. Since two electrons are required for electrolysis of each water molecule, the electrolysis current is a measure of the water present in the sample. If the volumetric flow rate of the sample gas into the electrolysis cell is controlled at a fixed value, then the electrolysis current is a function of water concentration in the sample (Figure 8.33b). This relationship is illustrated in the following example.

Determine the water concentration in a sample when the sample flow rate is 100 cc/min (0.212 ft^3/h) at 100°F (37.8°C) and 10 PSIG (68.9 kPa). The electrolysis current is measured at 320 μA.

$$\text{electrolysis current} = 320 \times 10^{-6} \text{ coulombs per second}$$

$$1 \text{ coulomb} = 6.25 \times 10^{18} \text{ electrons}$$

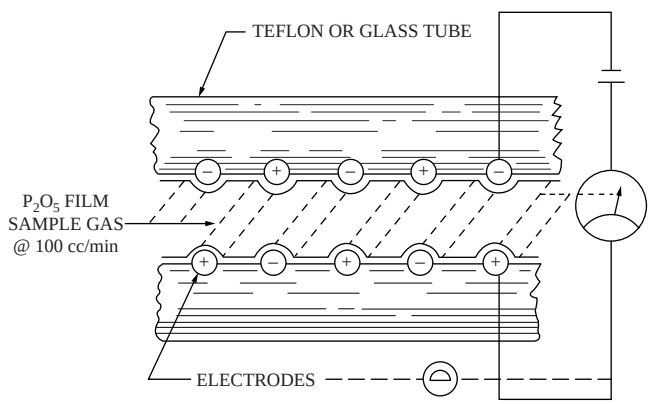

FIG. 8.33b
Operating principle of the electrolytic hygrometer.

Therefore, the electrolysis current is equal to the electron flow of 2×10^{15} electrons per second. Since two electrons of charge are required to electrolyze one water molecule, the water flow into the cell is equal to 10^{15} molecules per second. If, for purposes of this example, the water present in the sample is considered an ideal gas, the volume of water entering the sample can be calculated using the ideal gas law.

$$V_2 = \frac{P_1}{P_2}\frac{T_2}{T_1}V_1 \qquad \textbf{8.33(1)}$$

Avogadro's Law Avogadro's law states that equal volumes of different ideal gases at the same pressure and temperature contain the same number of molecules. The volumetric flow rate of water vapor can be calculated as

$$V_1 = 379\,N/A \qquad \textbf{8.33(2)}$$

© 2003 by Béla Lipták

where

N = the flow of water in molecules per second
A = Avogadro's number ($A = 2.73283 \times 10^{26}$ molecules/(lb·mol))
379 = volume of a pound-mole of ideal gas in cubic feet

Subscripts 1 and 2 refer to standard and sample conditions, respectively.

$$V_1 = \frac{379 \times 10^{15}}{2.73 \times 10^{26}} = 1.39 \times 10^{-9}\ \text{ft}^3/\text{sec} = 5.0 \times 10^{-6}\ \text{ft}^3/\text{h} \qquad \textbf{8.33(3)}$$

$$V_2 = 5 \times 10^{-6} \times \frac{560}{520} \times \frac{14.7}{24.7} = 3.2 \times 10^{-6}\ \text{ft}^3/\text{h} \qquad \textbf{8.33(4)}$$

Since the sample flow is controlled at 0.212 ft^3/h (100 cc/min), the volume concentration of moisture is: $3.2 \times 10^{-6}/0.212 = 15.1 \times 10^{-6}$. Expressed in parts per million (ppm), the moisture content is 15.1 ppm. The example above is intended to illustrate the fact that the hygrometer cell sees only a mass flow of water—number of water molecules electrolyzed per unit time. To obtain an output in the form of moisture content, the sample flow rate must be a known, constant value. Furthermore, the accuracy of the output can never exceed the accuracy with which the sample flow is controlled.

The commercial electrolysis hygrometer cell consists of a small chamber containing two noble metal electrodes that support a thin layer of desiccant. Moisture in the sample is absorbed by the desiccant and electrolyzed by means of a voltage-regulated power supply connected to the electrodes. Units are available for use in nonhazardous areas with the sample flow control, electrolysis cell, and electronics packaged as a single unit. When used in hazardous areas, the cell and flow controller are housed in an explosion-proof conduit, and the electronic circuitry is remote-mounted (see Figure 8.33c).

Recombination Effect Although this instrument will operate satisfactorily with a variety of samples, a phenomenon called the *recombination effect* introduces large errors at low moisture levels in hydrogen-rich or oxygen-rich samples. Recombination is the reversion to water of the electrolysis products; it introduces an error into the measurement when the recombined oxygen and hydrogen are re-electrolyzed. Apparently, all electrodes catalyze this reaction, although some electrode materials do so more than others. The use of rhodium as the electrode material has been found to minimize recombination.

When monitoring very low moisture levels in oxygen-rich or hydrogen-rich atmospheres, the recombination produces a relatively large error even with the best choice of electrode materials. For such an application, two sensors are used; one measures at sample flow rate X and the other at sample flow rate 2X. Because the error due to recombination is a constant, subtraction of the two sensor outputs yields a signal that is independent of recombination.

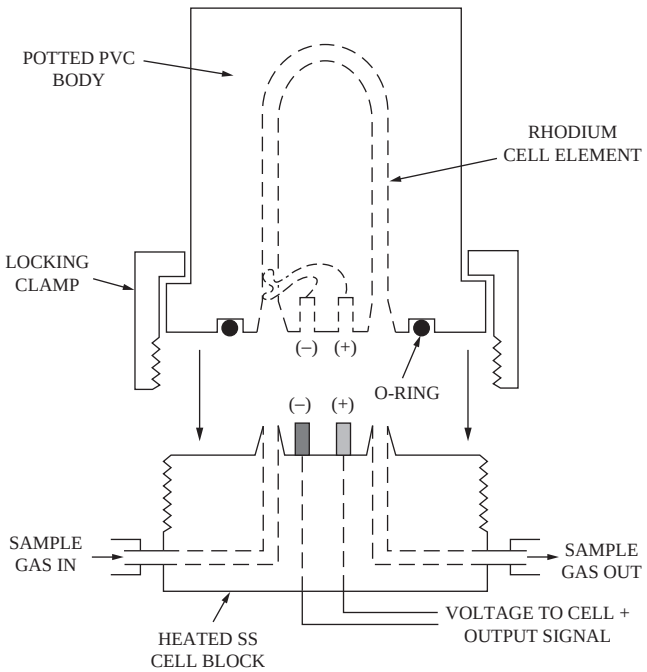

FIG. 8.33c
Electrolytic hygrometer cell.

Cell Limitations The cell will perform satisfactorily with a variety of samples; however, a number of sample materials will cause problems or should not be monitored with this instrument. Gases known to cause problems are hydrogen and oxygen. These gases have already been discussed in terms of the recombination effect, above. Some other gases for which this instrument is unsuitable are unsaturated monomers, alcohols, amines, ammonia, hydrogen fluoride, and $CHClF_2$ (Freon®) refrigerant.

Alcohols are seen by the cell as water. Amines and ammonia usually react with the desiccant. Hydrogen fluoride can corrode the internals of the cell. The data collected on $CHClF_2$ refrigerant indicates an anomaly, although the reason for this is not fully understood. Unsaturated hydrocarbons such as butadiene or monomers with a strong tendency to polymerize cannot be monitored, as the cell will be quickly coated with polymer.

Generally, the instrument should not be used with samples whose components may deposit in the cell (condensable vapors). When a cell becomes contaminated, it will show a memory for polarity; that is, the outputs under forward and reverse flow through the cell will not be equal. The electrolytic hygrometer is suitable for most inert elemental gas applications and for other gases that do not react with P_2O_5.

A cell will lose sensitivity when exposed to moisture levels of a few parts per million over a period of weeks. This sensitivity loss is due to the elution of desiccant with the sample. However, this process occurs over a long period of time and the cell can be recoated fairly easily in the field during periodic maintenance.

© 2003 by Béla Lipták

Liquid Samples The electrolytic hygrometer cell can be exposed only to gases. When the process sample is in the liquid state, there are two ways of using the electrolytic hygrometer. Recall that this process must not result in transporting to the sensor vapors that will condense or be absorbed.

1. *Sample vaporization*. If the liquid sample has sufficiently high vapor pressure, the sample can be vaporized, and the measurement is then made as a gas sample. The sample is vaporized by means of a vaporizing regulator located as close as possible to the sample take-off point to minimize lag. The remainder of the sampling system is the same as for gas samples.
2. *Sample stripping.* If the sample cannot be vaporized, this method can be used to obtain a gas sample at the cell. The moisture is stripped from the liquid sample in a falling film column. Liquid sample is continuously metered into the top of the column, where it descends as a thin film. Dry nitrogen, metered into the bottom of the column, ascends and removes moisture from the descending film of liquid sample. A filter located at the top of the column removes any droplets entrained in the nitrogen before the gas is passed through the measuring cell.

A drain valve at the bottom of the column facilitates removal of stripped sample. The nitrogen is dried before entering the column by passing through an electrolytic dryer, similar to the measuring cell, where moisture is removed by electrolysis. The supply nitrogen moisture level should be fairly low (less than 500 ppm) to avoid overloading the dryer (Figure 8.33d).

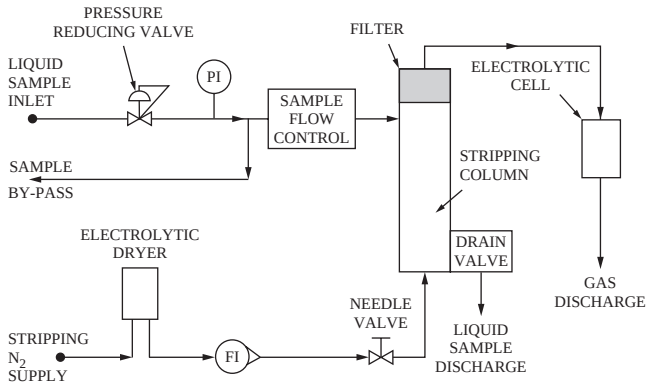

FIG. 8.33d
Liquid sample stripping.

Sampling System As pointed out previously, the electrolytic hygrometer is sensitive only to the mass flow of water into the cell; the concentration of moisture is inferred from the known sample flow rate. Therefore, the accuracy of the readout is partially dependent on the accuracy of the sample flow control and the accuracy of the moisture measurement can never exceed that of the sample flow control. This fact should be kept in mind when selecting a sample flow controller.

Capacitance Hygrometer

The principle of measurement utilized is the change of capacitance associated with a change of the sample dielectric constant between capacitor plates. The value of capacitance is a function of plate area, plate spacing, and the dielectric constant of the material between the plates. The dielectric constant of a material has a unique value for each substance and is related to the polarity characteristics of the molecules. This property can, therefore, be used to detect the presence of a specific substance in a pipeline stream.

Figure 8.33e shows an air capacitor connected to a battery and the same capacitor with mica between the plates. The capacitance of mica is six times that of air because the dielectric constant, K, of mica is 6, and the K of air is 1. If the mica were inserted gradually between the plates, then the capacitance would increase correspondingly from minimum to maximum. Water, with a dielectric constant of 80, would increase the capacitance to 80 times the value of the air capacitor.

The measuring cell of the hygrometer consists of two electrically insulated concentric metal cylinders to form the measuring capacitor plates (Figure 8.33f). The annulus between the cylinders is filled with alumina desiccant. Two porous metal discs support the cylinders and retain the desiccant in the annulus. The sample is allowed to flow through the annulus, and process water is absorbed or desorbed by the desiccant, which remains in equilibrium with the sample in terms of percent saturation. The desiccant thus amplifies the moisture content of the sample because the saturation level of the desiccant that is in equilibrium with the sample is very much higher than that of the sample.

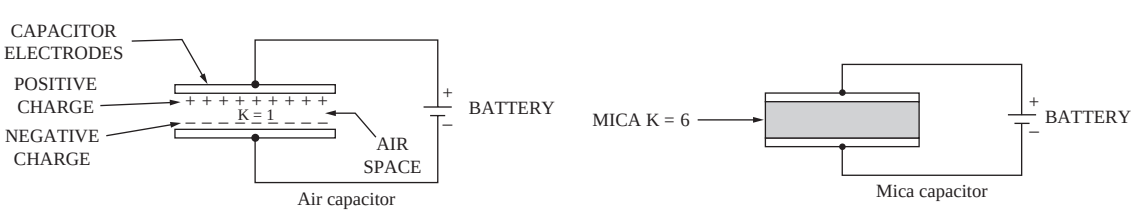

FIG. 8.33e
The capacitance is a function of the dielectric constant of the material filling the space between the capacitor plates.

© 2003 by Béla Lipták

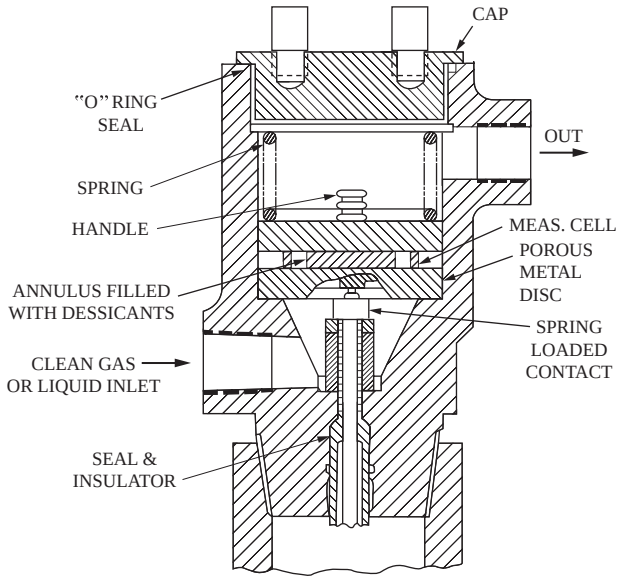

FIG. 8.33f
Capacitance-type measuring cell.

The measuring capacitor is part of an electrical circuit that includes a reference capacitor. This circuit is usually powered by a 15-kHz fixed-amplitude sinewave. The measuring and reference capacitors are switched alternately into the circuit such that its output voltage is a function of the connected capacitance. The output signal is a sinewave of the same frequency as the power signal and whose amplitude varies with the measuring and reference capacitors as they are switched into the circuit. This difference in amplitude is related to the measured capacitance, which, in turn, is a function of the moisture content of the sample.

The electronic chassis is normally mounted near the measuring cell and sampling system, which should be close to the sample take-off. In addition to an integral indicator and output signals of standard serial, milliampere, and millivolt ranges, the electronic chassis can be provided with multiple range switching and alarm contacts.

Sampling Systems It was pointed out previously that the desiccant in the measuring cell is the equilibrium with the sample in terms of percent saturation. For this reason, it is necessary to maintain the sample and measuring cell at constant temperatures. For example, propane at 100°F (38°C) will dissolve 300 ppm of water; at 70°F (21°C), it will dissolve 150 ppm. With a moisture level of 15 ppm, the propane would be 5% saturated at 100°F and 10% saturated at 70°F. Therefore, the output signal would change 100% with no change in moisture content if temperature were allowed to vary from 100 to 70°F.

The sample is maintained at constant temperature by passing it through a coil immersed in a constant temperature bath immediately upstream of the measuring cell. Additional temperature control of the sample is recommended even if the process stream is temperature controlled, because ambient conditions can affect the sample temperature.

Thin-Film Capacitance Probes The design and operation of thin-film capacitance probes have been described in the previous section in connection with Figure 8.32j and 8.32k. These units are also suitable for explosion-proof area classifications and can be used in measuring the moisture content of many gas and liquid samples (many liquid hydrocarbons, for example). The probe units are suitable for installation of high-pressure processes and are provided with microprocessor-based electronics capable of self-diagnostics and of multiple measurements or unit conversions (Figure 8.33g). These probes are available with a variety of covers/shields that can be used for a variety of sampling situations (particulate, bubbles, various viscosity liquids, etc.).

A unique configuration of a thin-film capacitance ceramic sensor is one with an integral calibration system. The *in situ* and automatic calibration is performed against a reference gas. The precision of this system is the result of the use of a chilled-mirror dew-point hygrometer to measure the moisture content of the reference gas used in the calibration (Figure 8.33h).

Limitations The capacitance instruments are not suitable for polar materials such as alcohols, because these become conductive at the 15-kHz operating frequency and short the measuring capacitor. Data on instruments operating at higher frequencies were not available.

Free sulfur and iron oxide concentrate on the desiccant will short the element.

At sample viscosities above 500 Saybolt Seconds Universal (SSU), moisture should not contact the desiccant

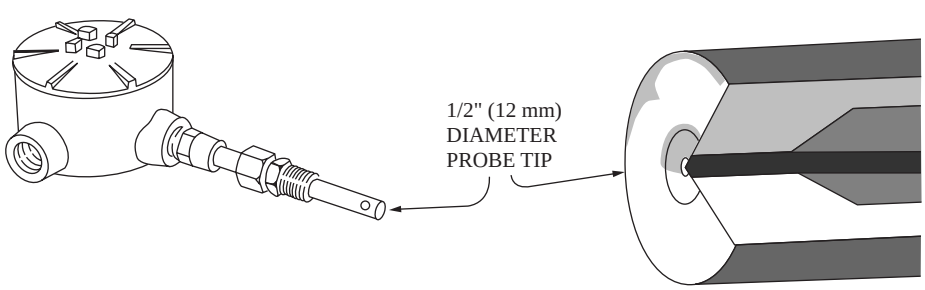

FIG. 8.33g
The gold/aluminum oxide probe can measure the moisture content of both gases and liquids. (Courtesy of Endress + Hauser Inc.)

© 2003 by Béla Lipták

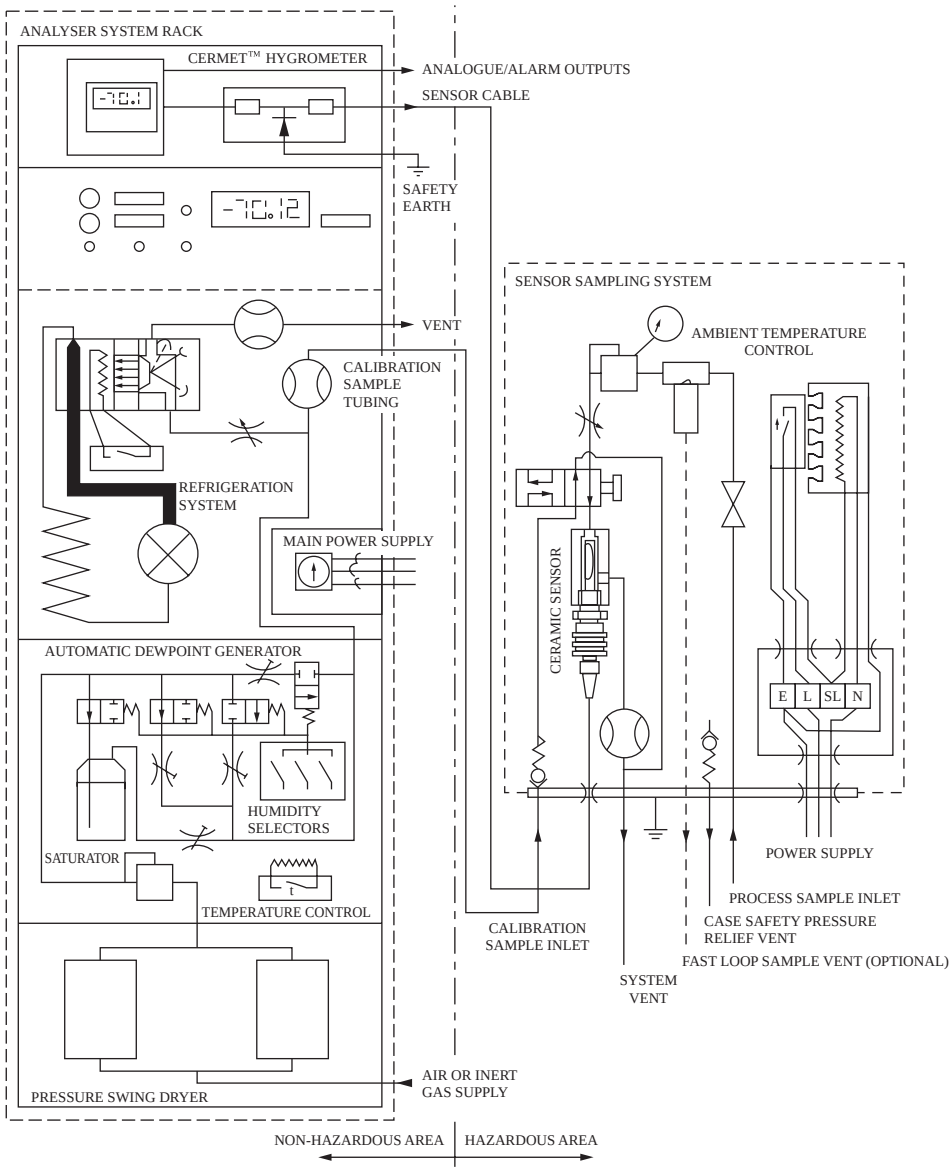

FIG. 8.33h

Thin-film ceramic sensor provided with integral and automatic means for recalibration. (Courtesy of Michell Instruments Ltd.).

at reasonable flow rates, and the measurement becomes meaningless.

The life of the desiccant is partially a function of solids in the stream, which pass through the filter. While the desiccant can be replaced very readily, the short life of the desiccant excludes the use of this instrument on sample streams containing large quantities of fines.

Impedance Hygrometer

This instrument measures the water content of a sample by means of a probe whose electrical impedance is a function of the vapor pressure of moisture in the fluid. Impedance is the apparent opposition to the flow of alternating current. The probe consists of an aluminum strip that is anodized to form a porous layer of aluminum oxide. A thin coat of gold is applied over the aluminum oxide. Leads from the gold and aluminum electrodes of the probes connect the sensing element to the measuring circuitry (Figure 8.33i).

Water vapor penetrates the gold layer and equilibrates on the aluminum oxide. The number of molecules adsorbed to the aluminum oxide is a function of the water vapor pressure in the sample. Each water molecule adsorbed contributes a distinct increment to the total conductivity of the aluminum oxide. The total probe impedance, the reciprocal of probe conductivity, is thus a measure of water vapor pressure in the sample. Water vapor pressure of a gas sample uniquely determines the dew-point temperature and moisture content of the sample. The output is normally calibrated to these units, as they are more convenient to use than vapor pressure. In the case of certain liquid samples, the moisture content can be measured through the application of Henry's law.

© 2003 by Béla Lipták

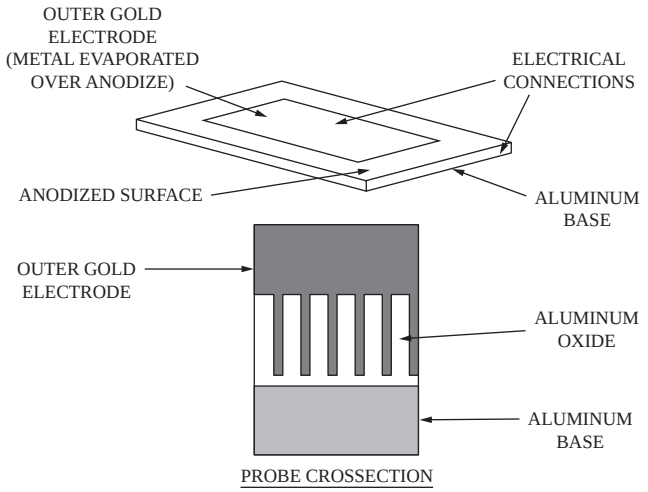

FIG. 8.33i
Impedance-measuring sensor.

In terms pertinent to this measurement, Henry's law states that, at constant temperature, the mass of water vapor dissolved in a given volume of liquid is in direct proportion to the partial pressure of water vapor in the sample. Henry's law can be restated in simpler form to read that the weight concentration of moisture in the sample is equal to the partial pressure of water vapor times a constant. However, Henry's law holds only for liquids with moderate solubility for water vapor, such as pure hydrocarbons, silicone oils, etc. The instrument cannot be used on liquid samples with a high solubility for water such as the alcohols, because the relationship expressed by Henry's law does not hold.

Installation The probe is designed for direct installation into the process stream. However, where danger of explosion exists, the probe is inserted into a small sample chamber connected to the process line with flashback arrestors located at the sample inlet and outlet. For liquid samples, temperature must be controlled and/or monitored and compensated for. Several probes can be connected to a single readout device and each probe can be monitored directly or by means of an automatic scanner. A serial, milliamp, and voltage output signals are available for recording or other functions; single or multiple range measurements are standard (Figure 8.33j or 8.33k).

Sampling System Often a sampling system is not required on gas samples. On liquids, sample temperature must be held constant or monitored and compensated for. These probes are available with a variety of covers/shields that can be used for a variety of sampling situations (particulate, bubbles, various viscosity liquids, etc.). Often these shields can eliminate the need for, or simplify the design of a full-blown sampling system.

Limitations The instrument can be used on all gases that are not corrosive to the probe and that will not spontaneously polymerize on contact with the probe materials. On liquids, the instrument is limited to those fluids with a moderate solubility for water vapor; thus the instrument is not suitable for measurement in polar liquids such as the alcohols.

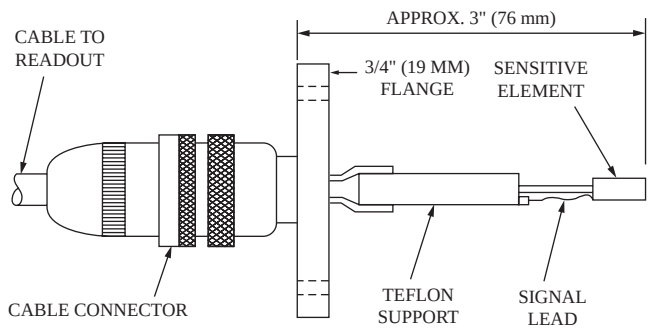

FIG. 8.33j
Flanged probe.

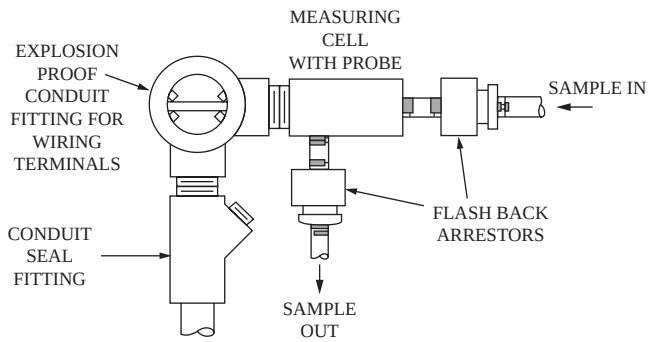

FIG. 8.33k
Impedance hygrometer installation for hazardous areas.

This sensor is suited for moisture measurement in hydrocarbons that consists of only hydrogen and carbon atoms or in halogenated hydrocarbons, amides, esters, many silicone oils, etc. The aluminum oxide probe is suited for moisture detection in cyclohexane, diethyl ether, liquefied natural gas, ethane, propane, butadiene, butane, styrene, and propylene. It is not recommended for applications where conductive solid particles, mercury, salts, or acids and bases are present. Hydrofluoric acid, for example, can damage the sensor, even in such low concentrations as 1 ppm.

The analyzer requires recalibration about twice a year and must be protected against excessive ambient temperatures (158°F, or 70°C) and against excessive flow velocities. If the process stream flows at a velocity in excess of 1.7 fps (0.5 m/s), it is advisable to place the sensor in a slow bypass. The viscosity of the sample also needs to be taken into consideration.

Piezoelectric Hygrometer

Piezoelectric quartz crystals have a number of uses: in communications, to control frequencies; in industry to measure temperature and thickness of metal films; and to generate

© 2003 by Béla Lipták

ultrasonic waves. In moisture measurement, advantage is taken of the oscillating crystal's sensitivity to deposits of foreign material on its surface. Commercially available crystals will show a frequency change of 2000 Hz per microgram of materials deposited.

For moisture measurement, the quartz crystals are coated with a hygroscopic material and exposed to the sample. Water from the sample is absorbed by the coating, which increases the total mass and decreases the oscillating frequency of the crystals. To measure changes of decreasing moisture concentration and to simplify the frequency measurement, two crystals are used. One crystal is exposed to a wet sample and the other to a dry reference gas for a short period. Then, sample and reference gas flows are switched so that moisture is absorbed by one crystal while being desorbed by the other. A cycle timer controls this switching. The frequency changes between the two crystals are in proportion to their mass changes and the moisture content of the sample gas.

Sampling System Dry reference gas is obtained by passing part of the sample gas through an integral dryer, or an external source of dry of nitrogen can be used. Two solenoid valves located upstream of the measuring cell switch the sample and reference gases from one crystal to the other. Sample gas flow to each crystal is regulated, although small variations of sample flow rate will not affect the measurement. For samples near atmospheric pressure, a vacuum pump may be used to draw sample through the measuring cell (Figure 8.33l). Some versions of this instrument design are being supplied with integral permeation tube calibration/benchmark systems to help ensure that the measurement is still accurate.

Limitations The instrument is not capable of measuring moisture in liquid phase samples. For this reason, it is applicable to only those liquid samples that can be stripped or completely vaporized within the operating limits of the instrument. In addition, monomers with a strong tendency to polymerize, such as butadiene and styrene, may coat the crystals and prevent proper operation.

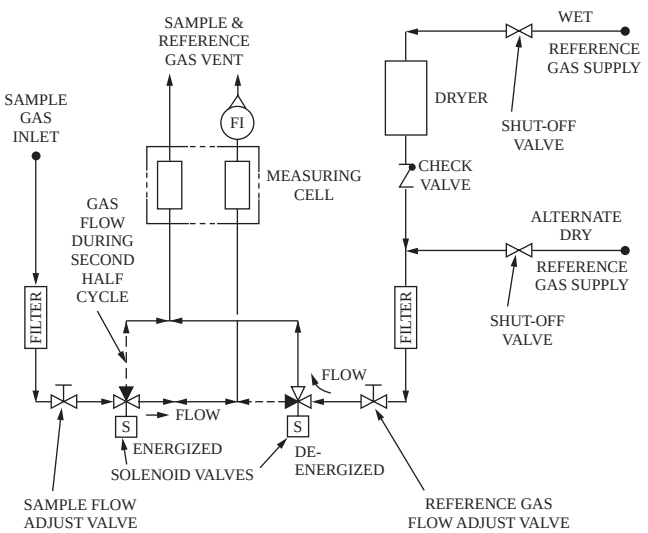

FIG. 8.33l
Piezoelectric hygrometer sampling system.

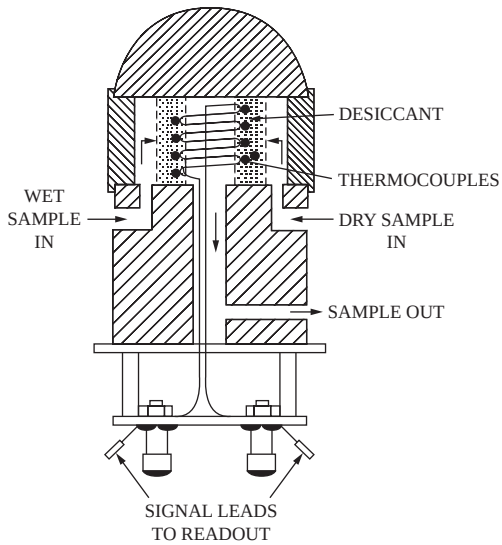

FIG. 8.33m
Measuring cell for the heat of an adsorption-type hygrometer.

Heat-of-Adsorption Hygrometer

The process of adsorption and desorption involves an exchange of energy. During adsorption, energy is released to the environment, and, during desorption, energy is removed. When a wet gas is passed through a column of adsorbent, which selectively adsorbs moisture, the temperature rise due to heat liberation is in proportion to the amount of moisture being adsorbed. Other factors can affect the heat of adsorption. They include things like the nature of the adsorbent and operating temperature, and they are selected to maximize the heat of adsorption (Figure 8.33m).

The sensing element consists of two desiccant columns, each containing a number of thermocouples connected in series. This assembly is housed in a temperature-controlled, thermally insulated housing. In operation, wet sample gas is passed through one column and dry reference gas through the other. Since adsorption and desorption occur simultaneously, the net thermocouple output voltage represents the algebraic sum of the heat gained by one column and lost by the other. The reference gas and sample gas streams are switched on a time-cycle basis to maintain dynamic conditions necessary for measurement in the sensing element. Sample flow is closely regulated, because moisture concentration is inferred from the known sample and reference flow rates (Figure 8.33n).

© 2003 by Béla Lipták

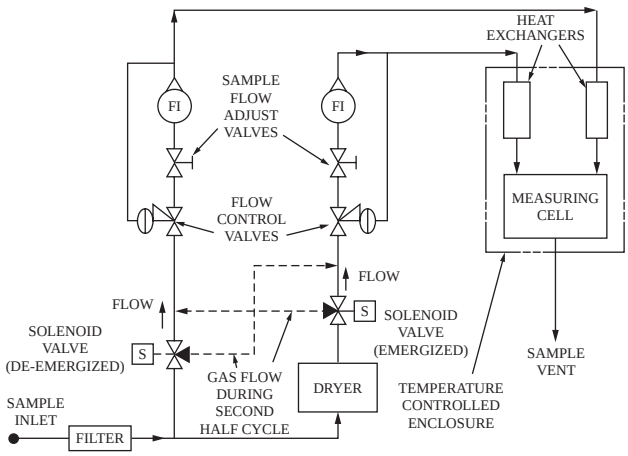

FIG. 8.33n
Sampling system for the heat of an adsorption hygrometer.

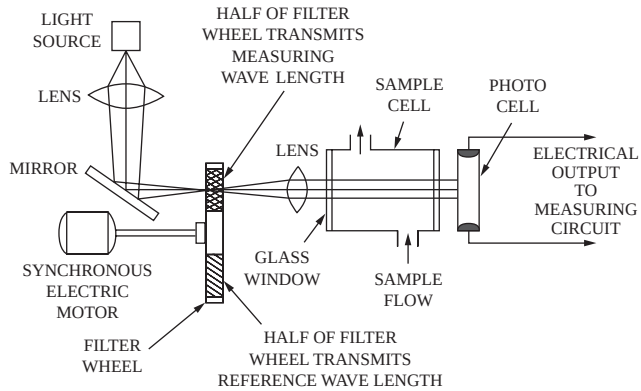

FIG. 8.33o
Schematic representation of the infrared moisture detector.

Sampling System The sampling system contains the following:

1. A dryer to remove all moisture from the sample gas so that the gas can be used as the reference.
2. Solenoid valves and cycle timer to switch reference and sample gas between the two desiccant columns.
3. Flow regulators to hold sample and reference gas flows constant.
4. Heat exchangers within the insulated enclosure to heat both reference and sample gas to the operating temperature of the sensing elements. The sample flow to the instrument is split into two equal flow rates at the sampling system; one half is the measured sample, and the other half is dried for use as the reference gas. The timer actuates solenoid valves in the sample and reference gas lines so that each desiccant column is exposed alternately to reference and to sample gas.

Limitations The sensing element cannot be exposed to liquid samples; however, the moisture content of liquid streams can be measured by one of two methods. Liquids with low boiling points can be vaporized at the sample take-off points by means of a vaporizing regulator, and the measurement is then performed on a gas sample. Or the moisture can be stripped from the liquid sample with dry gas, and from the moisture content of this gas the moisture concentration in the liquid sample can be inferred. Sample stripping is described in conjunction with electrolytic hygrometers.

Infrared Absorption Hygrometer

Water absorbs electromagnetic radiation in the infrared (IR) region of the spectrum. Specifically, infrared radiation of 1.4 and 1.93 μm wavelength is absorbed strongly by water. By measuring the attenuation (decrease of light intensity) of a beam of this wavelength as it passes through a sample, the moisture content of the sample can be determined. However, other factors such as reflection and dispersion of the radiant energy will contribute to the attenuation. Therefore, it is necessary to either calibrate these factors out of the measurement or to use a reference wavelength that is not absorbed by moisture but is affected by all other factors to the same extent as the measuring wavelength. The difference in the attenuation of the measurement and reference wavelength is then a function of moisture content only.

The sensing element consists of three groups of components: an IR radiation source, sample cell, and radiation detector. The radiation source consists of a lamp, filters to pass the measuring and references wavelengths, and optics to direct the beam through the glass sample cell. The radiation pickup consists of optics to collect the transmitted radiation and a photocell to convert the electromagnetic energy to an electric current.

The measuring and reference wavelengths are allowed to impinge alternately on the photocell so that two sets of current pulses are produced. These pulses are converted into two direct current (DC) signal levels whose ratio represents the moisture content of the sample (Figure 8.33o). For more details on IR analyzers, refer to Sections 8.23 and 8.27.

More complex spectrometers (IR, FTIR, NIR, and TDLAS) are also being used for moisture detection and monitoring applications when the application requires or justifies it (lower levels of detection, multiple simultaneous components [including moisture], complex sample matrices, etc.). One of the newer one is tunable diode laser adsorption spectroscopy (TDLAS), which claims measurements down to the ppt range with an appropriate sample.

Sampling System There are no special sampling system requirements for this instrument. Selection of hydrophobic (lacking affinity for water) materials for sampling system components is not critical, given that the instrument can measure only relatively high moisture content, where moisture contributed to the sample by the sampling system is insignificant in its effect on the measurement. When fiber-optic probes (FOPs) are used, the need for sampling systems is eliminated (Section 8.23).

© 2003 by Béla Lipták

Limitation There are several general limitations to the field of application of this instrument. The sample fluid must not be corrosive to the glass sample cell. It must have some minimum transparency for the measurement and reference wavelengths. Additionally, there cannot be any other components present in the sample that will selectively absorb either the measuring or reference wavelength.

Microwave Absorption Hygrometer

In the microwave frequency band of 20 to 22 GHz (K band), the wavelength is about 13 to 15 mm. In this frequency band, moisture (free water) responds uniquely. Only the water molecule produces molecular resonance. The microwave radiation can be guided by waveguides or transmitted through the process stream from its source to a detector.

The operating principle of this instrument is the same as that of the infrared absorption hygrometer, namely, selective absorption of electromagnetic energy by moisture in the sample. However, in this case, radiant energy in the microwave region is used. A transmitter provides a microwave beam that can either be transmitted through or reflected by the sample material. The receiving unit senses wave attenuation and phase shift and provides an output. The unit senses the mass of moisture in the beam path so that the readout is normally in terms of the mass of moisture per unit volume. However, with proper calibration, readout in weight percent can be achieved.

Several probe configurations are possible, depending on the application. Figure 8.33p shows the transmitting and receiving probes welded into a section of pipe. Internally, Teflon® contacts the sample. This type of arrangement can be advantageous on slurries and pastes, because there are no obstructions to flow. The units described above measure the attenuation of a microwave beam in the sample by moisture.

The reflectance-type unit contains the source and detector in a single housing. Rather than detecting the transmitted microwave energy, this design measures the amount of energy reflected by the sample. The probe of the reflectance unit does, however, require contact with the process material. Selection of the type of probe to be used is determined by the reflective and absorptive properties of the sample at operating conditions and by the physical installation. An advantage of the microwave hygrometer over the infrared unit is that there are no optical windows that may coat and effect the measurement.

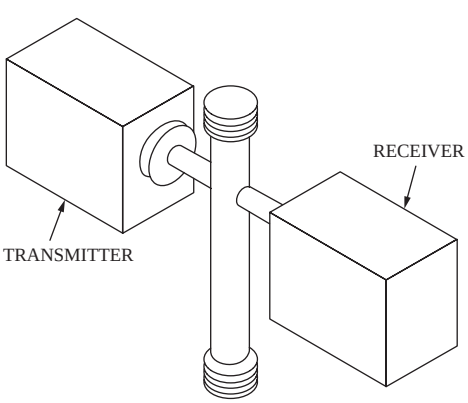

FIG. 8.33p
Microwave sensor installed in pipe.

Limitations The unit is not suitable for moisture measurement in gases.

Dipole Polarization Effect Moisture Sensor

The principle of this measurement relies on the fact that water molecules are formed by covalent bonds. These bonds share electrons unequally between the hydrogen and oxygen atomic nucleuses, and the result is an electrical asymmetry around the molecule (two slightly positively charged hydrogen atoms and a slightly negatively charged oxygen atom). When these molecules are subjected to an electric field, they tend to align with the electric field because of their dipole nature. Unfortunately, other influences such as surface polarization, ions, etc., can also create an electrical effect in the field.

By selecting an appropriate sensor field frequency (e.g., 20 kHz), the influence of these other influences can be reduced. Other polar molecules can interfere, but, because water molecules are very specific, this is not considered a significant factor in most analysis. Ammonia (NH_3) is the closest to water, and its interference effect is listed as about 1:50 (± 50 gm/m^3 NH_3 equals about ± 1 gm/m^3 of water).

A dipole probe is depicted in Figure 8.33q. The sensor measurement chamber is an open capacitor that is protected from coating or attack by the process steam components by a membrane filter. The measurement output is directly proportional to the number of water molecules in the field and is reported as a mass per unit volume output. The probe can be made from several materials (stainless steel, inconel, etc.) and can even be coated with nonstick materials. The result is an available probe for most needs. The probe is usually heated to about 10°C above the highest process temperature to provide a constant measurement temperature and to minimize potential condensation and fouling. Versions of this probe design have been used to measure moisture in processes as hot as 430°C.

Because the measured signal is directly proportional to the number of water molecules in the chamber, calibration is very easy. A zero-reference capacitor is hermetically sealed in the probe and, once the zero reference is established and because the measurement is linear, you need only one other calibration point for the entire 0 to 100% range. The calibration will not change for the life of the instrument as long as the physical integrity of the measuring and reference chambers are maintained.

© 2003 by Béla Lipták

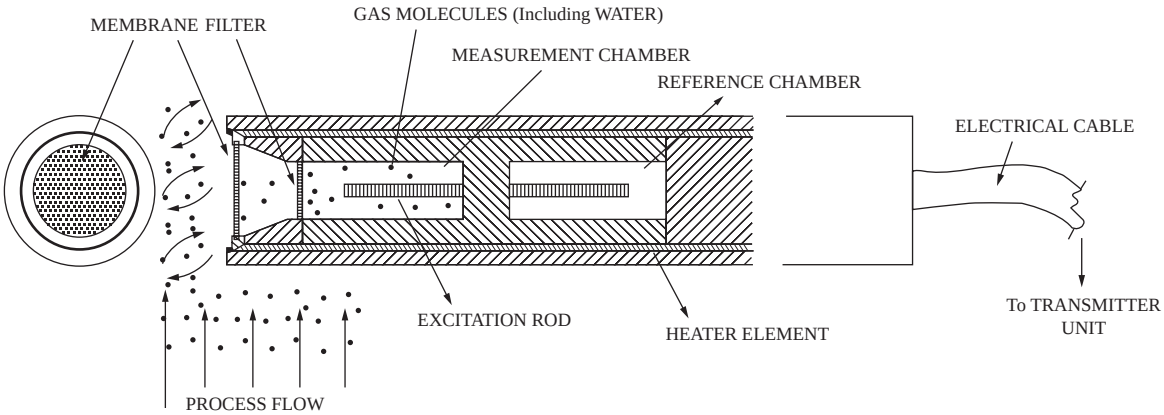

FIG. 8.33q
A dipole polarization effect moisture sensor. (Courtesy of Dewcon Instruments Inc.)

Sampling System There are no special sampling system requirements for this instrument. The probe is designed to insert directly into most processes. Extreme sample conditions may require some sample conditioning.

Limitations The unit is not suitable for moisture measurement in liquids.

Cavity Ring-Down Spectroscopy (CRDS) Moisture Analysis

This spectroscopic technique is different enough from those previously discussed that it will be discussed here on its own. The measurement principle is based on absorption spectroscopy. The difference between this and more traditional absorbance spectroscopy is that this measurement is based on time rather than just the magnitude of the absorbance. The actual measurement is based on a light intensity decay rate. By measuring the time it takes for the appropriate molecular absorbance light fingerprint to fade or ring-down, you can measure extremely low levels of the absorbing contaminants.

A CRDS instrument is depicted in Figure 8.33r. A continuous-wave laser emits a beam of light energy through a highly reflective mirror into the absorbance cell (cavity). This cell is capable of reflecting the light back and forth many times and, by this multiple path design, will typically achieve total path lengths in the range of 100 km (vs. typically 100 m for typical absorbance multiple pass cells). Once the detector sees a preset level of light energy, the light source is diverted from the cavity. On successive passes of light, a small amount of light is sensed and, once the light *rings down*, the measurement is complete.

The sample concentration is determined from the shape of the ring-down decay curve. Figure 8.33s shows an example of a ring-down decay curve.

Because the measurement is time based, it is not subject to small variations in laser intensities. Because of its very long path length, where molecules in the sample are frequently

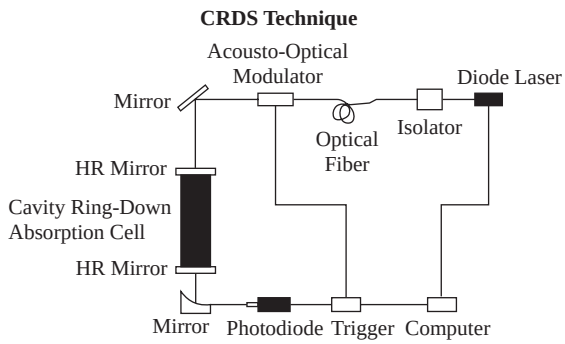

FIG. 8.33r
Cavity ring-down spectroscopy instrument. (Courtesy of Tiger Optics LLC.)

exposed to the light, the sensitivity of the instrument is enhanced to a level of actually achieving part-per-trillion (ppt) levels of measurement on water in gases. This technology has been utilized primarily in the semiconductor industry, on ultrapure gases, and for bio-safety. Robust process-hardened instruments for more typical process applications are under development.

Sampling System Special sampling systems are required for this instrument. The sample must be clean, temperature controlled, pressure controlled, and noncondensing in addition to being compatible with materials that it will contact.

Limitations The unit is not suitable for moisture measurement in liquids or condensing vapors. Gas samples should be adequately cleaned and/or conditioned in an appropriate sampling system.

Neutron Backscatter Moisture On-Line Analyzer

This measurement principle is essentially the same as that of the nuclear moisture gauge discussed in greater detail in Section 8.34. It is a neutron radiation source that is focused on a sample, and the neutron backscatter is measured and

© 2003 by Béla Lipták

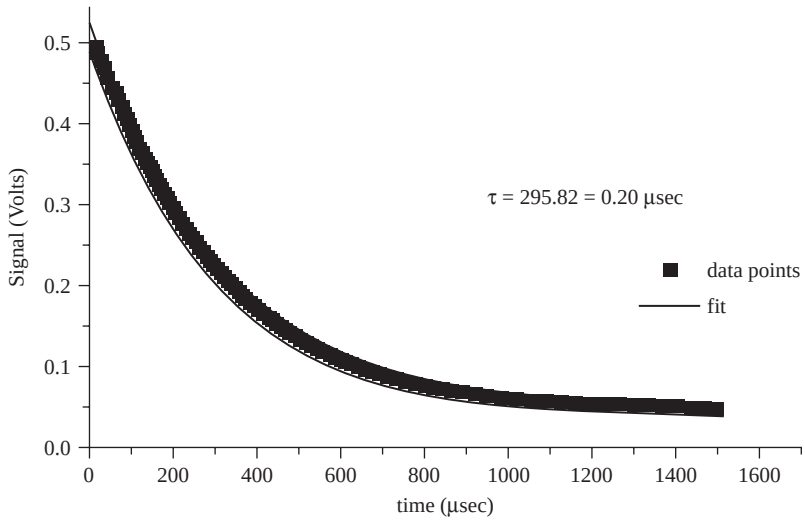

FIG. 8.33s
Typical ring-down decay curve. (Courtesy of Tiger Optics LLC.)

correlated to an appropriate moisture content. High-energy neutrons are focused on the sample. Backscattered low-energy neutrons that have interacted with a hydrogen nucleus are detected and correlated to the hydrogen/moisture density. As a result of the advancements in this design, it is now also being considered for some nonsolids applications, although the majority of its applications is still on solid samples. Figure 8.33t depicts a typical installation.

Because the measurement is so focused on the neutron and hydrogen nucleus interaction, it is not an appropriate measurement where hydrogen-containing species, other than water, can vary in concentration. This essentially eliminates the world of hydrocarbons, but it is still suitable for inorganic chemicals, salts, mineral applications, etc. Moisture in blast furnace coke is still the dominant application. Optional density compensation systems are available but are generally not required. This could be factor if you are encountering foam or slurries of significantly varying densities.

A sensor can typically measure a semisphere sample volume of approximately 18-in. (46 cm) radius. If one is monitoring a sample of varying consistency, the overall measurement accuracy can be increased by placing the sensor where it monitors a flowing sample. This effectively will give an integrated or averaged moisture value.

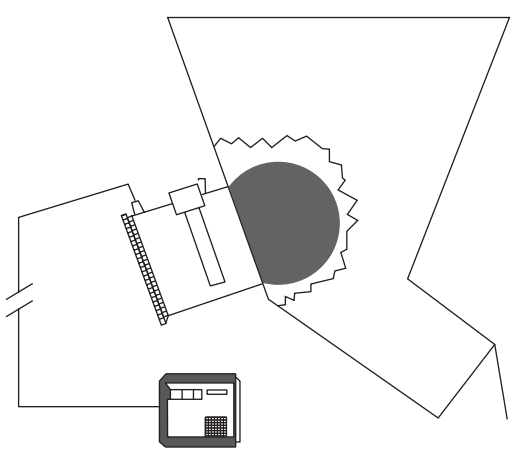

FIG. 8.33t
Example of a neutron backscatter moisture sensor installation. (Courtesy of Thermo Electron Corp.)

Sampling System There are usually no sampling system requirements for this instrument. The sensor is typically mounted directly on the process.

Limitations The unit is not suitable for moisture measurement in gases or samples with varying levels of hydrogen atoms (like most hydrocarbons). If the sample density varies significantly, a density measurement should be made for compensation.

Calibration of Moisture Analyzers

Moisture calibrators are available in two conceptual designs. They are based on either saturated gas dilution or permeation tube designs. Some moisture analyzers include a calibration system integral to the instrument or as an available option. In addition to calibration, these can be helpful to test/ensure that the moisture sensor is still alive and responding.

The first design that will be reviewed is the saturated gas dilution system concept. Figure 8.33u depicts a standard range and a lower range design. Both start out with a water-saturated vapor stream at a known temperature and, consequently, known moisture content. This stream is then diluted in a controlled (ratio) fashion with a dry gas stream to yield the desired value. Obviously, the larger the single-stage dilution ratio, the more difficult it is to maintain precise control.

© 2003 by Béla Lipták

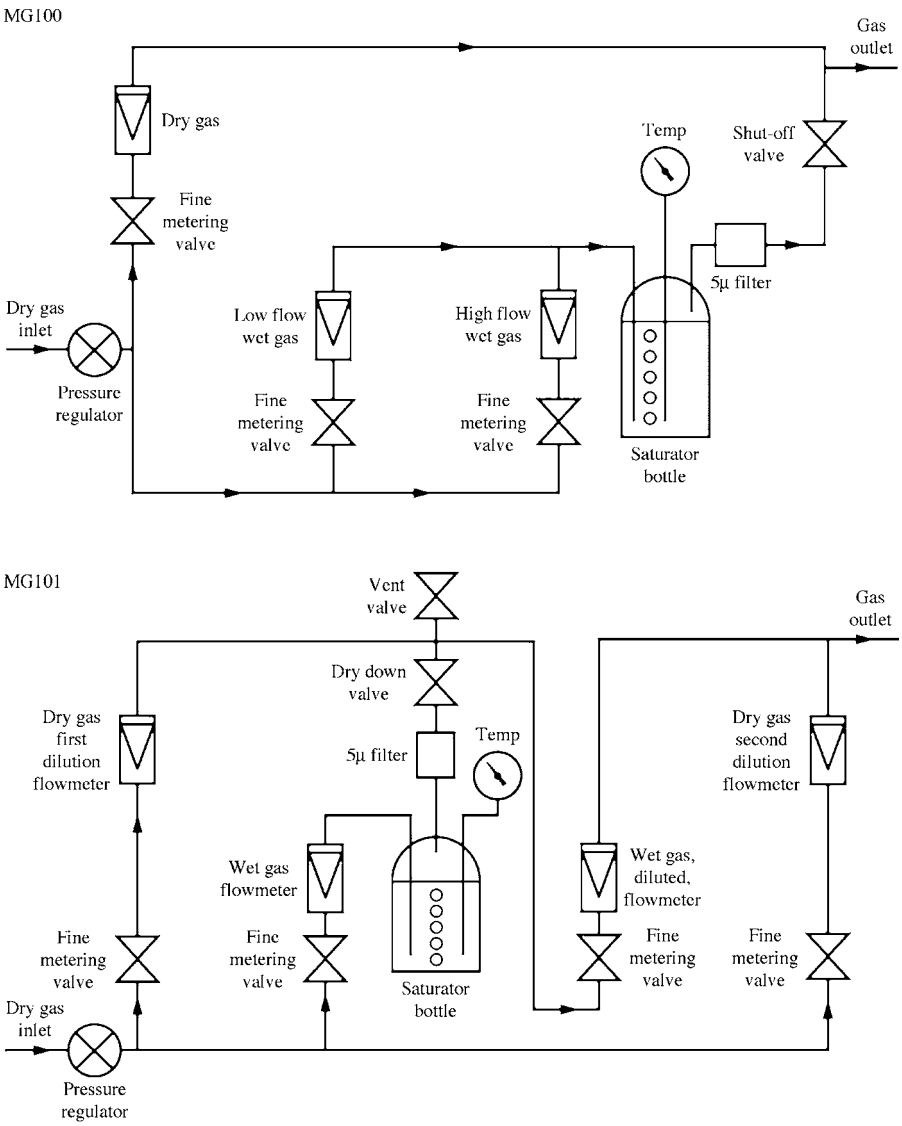

FIG. 8.33u
Example of gas dilution based moisture calibration systems. (Courtesy of Panametrics Inc.)

The lower system in the figure offers multiple opportunities (stages) to dilute the saturated stream with dry gas and will allow you to achieve more precise control of calibration samples at lower values than a large-ratio single-stage dilution approach.

The second design concept is the permeation tube design. Figure 8.33v depicts a simple permeation tube moisture calibration design. Permeation tube designs can be used to generate known standards from dry gases or to make known standard additions to samples or standards. They are based on the concept that, under controlled conditions, the rate/volume of moisture that will permeate through a permeation tube (its membrane wall) is constant. By also controlling these conditions and the dilution gas flow rates, one can at least generate a reproducible and predictable moisture standard. If one is adding it to a system, and if the dilution gas is truly dry or constant, it is possible to generate an actual moisture value. Typically permeation systems operate at much lower flow rates than saturation dilution systems.

A recent advancement of the permeation tube design is depicted in Figure 8.33w. It depicts a permeation tube system that is designed to introduce moisture into gas streams that contain reactive components. Some examples of reactive gas components that were considered include ammonia, HCl, HBr, chlorine, silane, and others. The reactive component does not come in contact with the permeation tube, and the reactive matrix is formed by dilution after the water addition. These need to be evaluated on an individual application basis and surely won't work for all situations, but they are a nice addition to the analyst's toolbox.

© 2003 by Béla Lipták

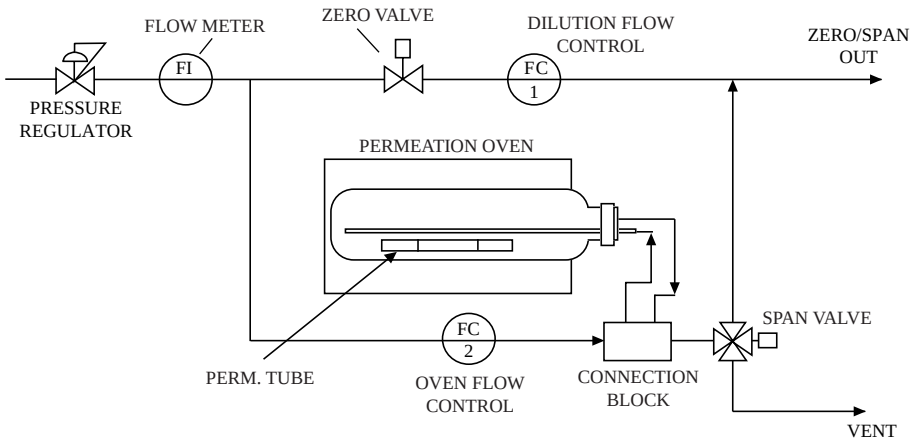

FIG. 8.33v
Example of a permeation tube based moisture calibration system. (Courtesy of Kin-Tek Laboratories Inc.)

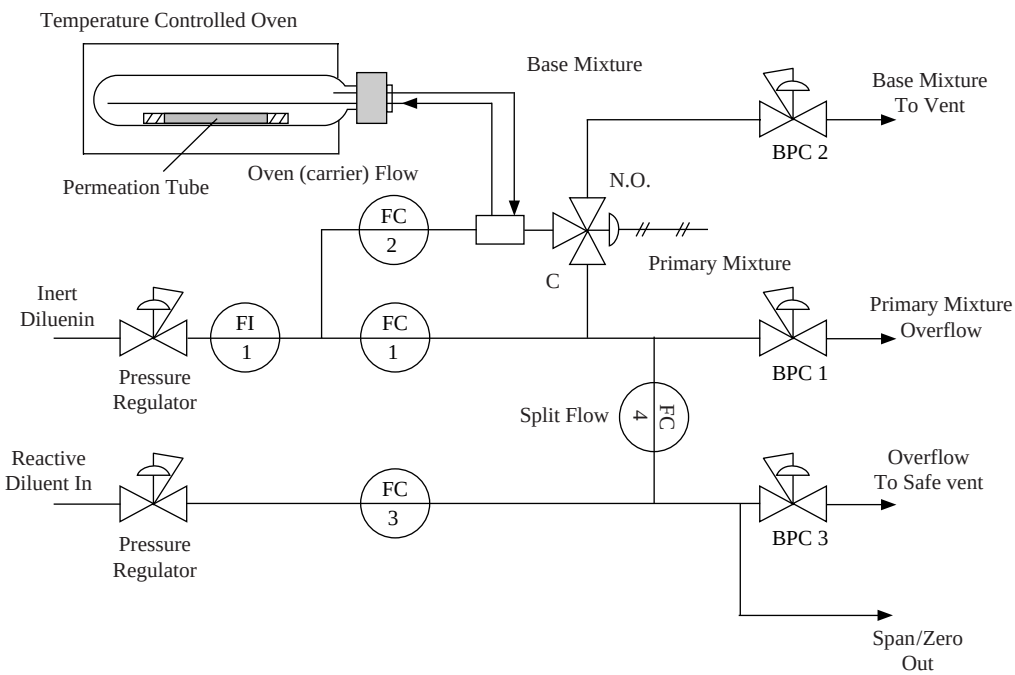

FIG. 8.33w
Example of a permeation tube based moisture in reactive gases calibration system. (Courtesy of Kin-Tek Laboratories Inc.)

Limitations Generally speaking, the saturated gas dilution design concept is better for generating higher concentration standards and higher standard flow rates. The permeation designs are better for lower concentration standards.

Bibliography

Bailey, S. J., Moisture sensors, *Control Engineering*, September 1980.

Belkim, H. M., Factor affecting response characteristics of electrolytic instruments for detecting moisture, AID/ISA Symposium, Pittsburgh, May 1970.

Cucchiara, O., The measurement of dissolved water in organic liquids using a hygrometer, *Analysis Instrum.*, 15, ISA, 1977.

Dudek, J. et al., Semiconductor gases exact max, *InTech*, 32–33, July 2002

Gumpert, R. and Pakulis, I. E., Three moisture measurement techniques, *InTech*, August 1981.

Jutlia, J. M., Multicomponent on-stream analyzers for process monitoring and control, *InTech*, July 1979.

Kohler, H. M. and Mathew, A., Continuous in-situ and elevated temperature moisture measurement in high particulate reactive processes, ISA1996 Conference Paper #96–002

Mator, R. J., Trace moisture analyzers and their calibration, *Analysis Instrum.*, 12, ISA, 1975.

McKinley, J. J., Using permeation tubes to create trace concentration moisture standards, National Conference of Standards Laboratories Conference, Atlanta, GA, July 1997.

© 2003 by Béla Lipták

McKinley, J. J., Using permeation tubes to prepare trace moisture standards in reactive gases, International Symp. on Humidity and Moisture, Taipei, Taiwan.

Mettes, J. and Beck, T., Manufacturers today require PPB moisture detection, *Meas. Contr.*, February 1992.

Mettes, J. et al., Multipoints PPM moisture measurement using electrolytic cells, ISA Conference, Houston, October 1992.

Moisture analyzer helps extend period between dryer column recharging, *Contr. Eng.*, August 1980.

Polta, R. C., Anderson, C. T., and Stule, D. A., Monitoring moisture in dewatered sludge, *InTech*, June 1980.

Scelzo, M. J., The trend is toward processing and measurement at "ultralow" moisture levels, *Meas. Contr.*, February 1992.

Studebaker, P., Moisture analyzers balance sensitivity with price, *Control*, November 1993.

Sutherland, D., Moisture Analyzer Calibration, *Meas. Contr.*, June 1993.

Yan W. B. and Mallon, T., Breakthrough technology measures parts-per-trillion moisture in gases, *Chem. Res.*, February/March 2002.

© 2003 by Béla Lipták

8.34 Moisture in Solids

A. BRODGESELL (1969, 1982) **B. G. LIPTÁK** (1995, 2003)

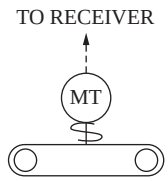

Flow Sheet Symbol

Types of Designs:

A. Fast neutron moderation
B. Infrared
C. Microwave
D. Capacitance and dielectric constant sensors
E. Impedance, resistance
F. Nuclear magnetic resonance
G. Radio frequency absorption
H. Karl Fischer titrator (laboratory)
I. Drying oven (laboratory)

Ranges:

A. 2 to 80%
B. From 0 to 0.2% up to 1 to 90% maximum
C. From 0–1% to 0–70%
D. 4 to 40%
G. From 0–35% to 0–80%
H. 10 ppm to 100%
I. 0 to 100%

Inaccuracy:

For most, 0.5 to 2% of full scale
A. 0.2% if density is also measured and bound hydrogen is constant
B. 0.5 to 1% of calibrated range
C. For a 0 to 15% range, the error is within 0.5%; on installations where nuclear density gauging is included, the error can be within 0.1%
G. Error is under 0.05% moisture
H. 5 ppm

Costs:

A. About $25,000 if nuclear density gauge is also included
B. From $10,000 to $15,000 for reflectance units; higher for transmission systems operating at three frequencies to obtain thickness and density compensation
C. From $15,000 for microwave only, or from $25,000 if nuclear density gauge is included
D. About $5000 and up for industrial units, $1000 for soil moisture detectors
G. $7000 to $10,000; more if installation is included. Handheld meters are $1500 to $2000; computerized units for the laboratory are $5000 to $6000; on-line RF or IR systems cost from $7000 to $13,000; four-channel IR/RF costs range from $16,000 to $36,000; on-line scanning, $40,000 to $45,000
H. About $10,000
I. $5000 and up

Partial List of Suppliers:

Aqua Measure Instrument Co. (G) (www.moistureregisterproducts.com)
Arizona Instrument Corp. (I) (www.azic.com)
Automata Inc. (D) (www.automata-inc.com)
Berthold Technologies (C) (www.bertholdtech.com)
C. W. Brabender Instruments Inc. (www.cwbrabender.com)
Bran & Luebbe Analyzing (www.bran-luebbe.nl)
CEM Corp. (C) (www.cem.com)
Cosa Instrument Corp. (H) (www.cosa-instrument.com)
Enercorp Instruments Ltd. (E) (www.enercorp.com)

© 2003 by Béla Lipták

H. F. Scientific Inc. (www.hfscientific.com)
James Instruments (www.ndtjames.com)
Paul Lippke (D) (www.lippke.com/de)
LND Inc. (F) (www.indinc.com)
L.T. Industries Inc. (B) (www.ltindustries.com)
Maselli Measurements Inc. (www.maselli.com)
NDC Infrared Engineering (www.ndcinfrared.com)
Ohmart/Vega Corp. (A) (www. ohmartvega.com)
PNNL Sensors (www.technet.pnl.gov)
Sensortech Systems Inc. (G) (www.sensortech.com)
Thermo Measure Tech (A) (www.thermo.com)
Wedgewood Technology (www.wedgewoodtech.com)

INTRODUCTION

In some cases, the moisture content of solids can be measured by the same types of analyzers that are used for the detection of moisture in liquid or gas samples. These devices, such as capacitance, infrared, and microwave sensors, have already been discussed in Sections 8.32 and 8.33 and, therefore, will be treated only briefly in this section. The laboratory-type moisture analyzers, such as the oven and the Karl Fischer type units, can also be used on both liquid and solid samples.

It should also be noted that the main purpose of this section is to describe the available choices for solids moisture analyzers and is not to give detailed descriptions of the families of analyzers involved. These descriptions are given in separate sections, such as Section 8.27, dealing with infrared analyzers, and Section 8.66, devoted to autotitrators and the like.

LABORATORY ANALYZERS

There are several discontinuous methods for moisture determination. One such method is to heat the solid sample in an oven and measure the resulting weight loss caused by the evaporation of the water in the sample. Some of the weight scale displays are provided with built-in indicators to display moisture content directly in weight percentage. For this method to be accurate, it is necessary that the sample contain no other volatile materials (besides water).

The moisture content of a sample can also be determined by monitoring the water vapor concentration in the atmosphere of a drying oven. To do that, an electrolytic hygrometer can be used, with it's output integrated during the period of drying.

Still another method utilizes the conversion of calcium carbide to acetylene as an indication of moisture in a preweighed sample. The quantity of the evolving acetylene is indicative of the moisture content of the sample.

None of these methods provides continuous output signals, and each requires a considerable lag between the taking of a sample and obtaining a measurement.

Karl Fischer Titration

The other widely used laboratory method of moisture analysis (accurate to 5 ppm) is Karl Fischer titration. When solids are analyzed, the sample must first be dissolved in a solvent. If the solids are not soluble, a solvent must be used to leach the moisture out of the solids. Once the moisture is transferred into the solvent, the titration is performed using the Karl Fischer reagent, which consists of a solution of sulfur dioxide, iodine, and pyridine in methanol. The titration end point can be obtained automatically (see Section 8.66) by detecting the current flow through the solution.

INDUSTRIAL DETECTORS

Instruments for continuous moisture measurement in solids are specialized, not because of their unique operating principles but because of the difficulty of handling solids samples. Instruments that infer the moisture content from such properties as dielectric constant and conductivity are not as reliable as those that measure moisture directly. This is because conductivity or dielectric constants are also affected by factors such as particle size and packing density, and the variations of such parameters are very difficult to predict and compensate for.

Nuclear Moisture Gauge

In this instrument, the neutron moderating characteristics of the hydrogen atoms; are used for moisture detection. Neutrons are subatomic particles that are emitted during the atomic decay of certain radioactive materials. These particles are electrically neutral and have a mass approximately equal to the mass of a hydrogen atom.

Theory of Operation Neutrons, because they lack an electric charge, are not deflected by the negative and positive charges associated with atoms; they are deflected or reflected only on impact with the atomic nucleus. Such an impact involves a change of momentum of the neutron and of the impacted nucleus. Because of the conservation of energy and momentum, after the impact, the energy of the neutron is decreased by an amount equal to the energy transferred to the impacted nucleus. The energy of the neutron after the impact is a function of the mass of the impacted atom.

This fact is explained by Equations 8.34(1) and 8.34(2) below. In these equations m_1 and m_2 respectively equal the mass of the neutron and the impacted atom. V_1 and V_3 are

© 2003 by Béla Lipták

the neutron velocities before and after impact, and V_2 is the velocity of the impacted nucleus, which was initially at rest.

$$m_1V_1 = m_2V_2 + m_1V_3 \text{ (conservation of momentum)} \quad \textbf{8.34(1)}$$

$$\tfrac{1}{2}m_1V_1^2 = \tfrac{1}{2}m_2V_2^2 + \tfrac{1}{2}m_1V_3^2 \text{ (conservation of energy)} \quad \textbf{8.34(2)}$$

From Equation 8.34(1),

$$V_2 = \frac{m_1(V_1 - V_3)}{m_2} \quad \textbf{8.34(3)}$$

Substituting 8.34(3) into Equation 8.34(2) and simplifying the results yields

$$V_3 = \frac{-V_1(m_2 - m_1)}{(m_1 + m_2)} \quad \textbf{8.34(4)}$$

If the mass of the impacted nucleus is equal to the mass of the neutron, all of the neutron's kinetic energy is transferred to that nucleus, and V_3 becomes zero.

The hydrogen atom, because it is most nearly equal in its mass to the neutron, is the most efficient energy absorber (or moderator) of neutrons. Therefore, the number of reflected or moderated neutrons can be used as a measure of the number of hydrogen atoms present in the sample, which relates to its moisture content.

However, density also affects the amount of neutrons reflected. Therefore, it is necessary for a nuclear density gauge to be also included as part of the moisture measurement system. The output of the density gauge is used to compensate the neutron moisture measurement for sample density variations.

The Measuring System The measuring system contains a high-energy neutron source of plutonium-beryllium or americium-beryllium and a low-energy neutron detector. The density measurement is made by a gamma-ray source and detector arranged to measure reflected or transmitted gamma rays. The moisture and density measurement signals are fed to an electronic chassis where they are scaled to engineering units and presented for readout as a compensated moisture concentration.

The sensing unit can be mounted over conveyors, as shown in Figure 8.34a, on bins, or on pipelines. The sample volume should be fairly large, 16 in. (400 mm) wide and a minimum of 2 in. (50 mm) thick for conveyors, or a minimum of 8 in. (200 mm) diameter pipe size.

On conveyors where the solids bed may be of nonuniform thickness, a scraper plow or a roller should be installed ahead of the measuring head. When measuring moisture in a bin or chute, care must be taken to prevent material buildup on the vessel walls. For applications involving solids with a tendency to cake, the vessel wall should be lined with a nonsticking plastic such as Teflon® or be provided with a bin vibrator.

Limitations Because the instrument is sensitive to all hydrogen atoms, chemically bonded hydrogen in the sample is also seen as water. This can be corrected for by calibration only if the quantity of bonded hydrogen in the sample is constant and the amount of hydrogen present as free water is of the same order of magnitude as the amount of bonded hydrogen. If they are not of the same magnitude, a change in moisture concentration might not result in a detectable signal change.

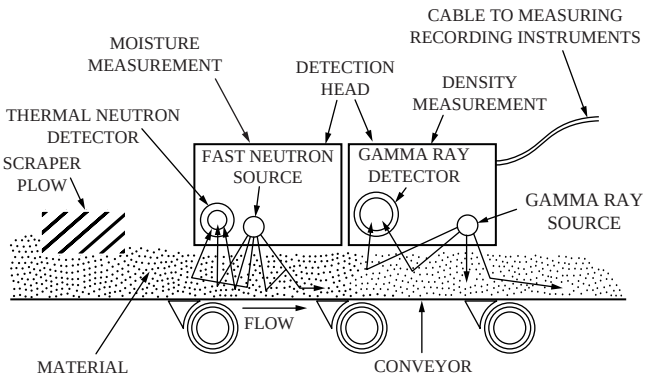

FIG. 8.34a
Nuclear moisture measurement.

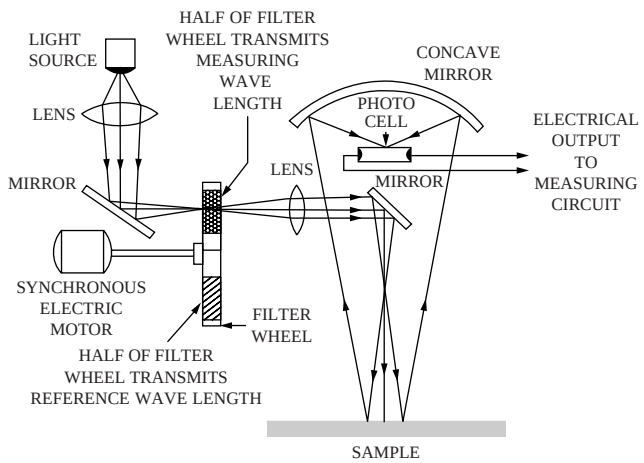

FIG. 8.34b
Infrared moisture measurement (reflectance). In microprocessor-based "quadra-beam" designs, four channels are used, and the measured reflections are ratioed to reduce drift and stabilize the measurement.

Infrared Absorption or Reflection

Infrared energy is selectively absorbed by water. When infrared analyzers are used for moisture measurement in solids, the measuring and reference beams are not transmitted through the sample, but they are reflected off the sample.

Measurement and Installation The sensing element consists of a light source, filters to pass the measuring and reference wavelengths, optics to direct the light beam onto the sample and to collect the reflected light, and a photocell to convert the reflected light into electrical current (Figures 8.34b and 8.34c). The sensor should be mounted so that the light aperture is a few inches from the sample.

© 2003 by Béla Lipták

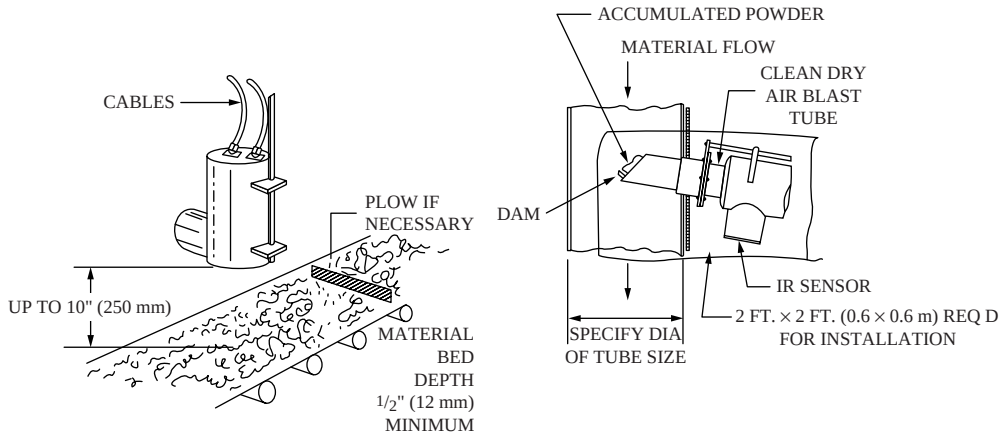

FIG. 8.34c
Installation of infrared moisture analyzers for belt and duct applications. (Courtesy of Aqua Measure Instrument Co., formerly Moisture Register Products.)

The two current pulse outputs of the photocell, which correspond to the reflected measurement and reference wavelengths, are converted into two DC signals. The ratio of these signals is read out as moisture content.

Limitations If the reflectivity of the sample is not above a minimum value, the amount of light reflected (and the change due to absorption) will be too small to produce a useful output. Graphite, coal, metal powders, and inorganic pigments are all poor reflectors of infrared, so this instrument cannot be used to analyze their moisture content.

Because infrared waves do not penetrate very far below the surface of the sample, the moisture measurement obtained will be representative of the moisture content on the surface of the material. If the surface moisture content is not representative of the average moisture content of the sample, this sensor cannot be used. This is usually the case when the sample is exposed to the ambient atmosphere. Due to drift in the instrument, periodic recalibration is necessary.

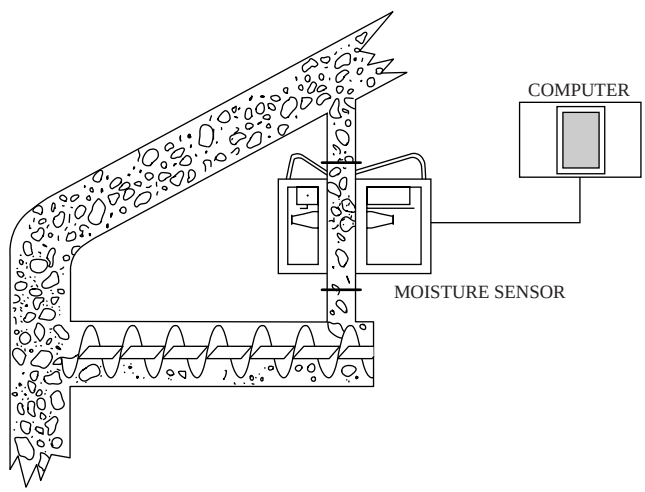

FIG. 8.34d
Microwave-type solids moisture analyzer with radiation densitometer correction. (Courtesy of ThermoMeasure Tech, formerly Kay-Ray/Sensall Inc.)

Microwave Attenuation

The operation of the microwave-type moisture analyzer has already been described in Section 8.33, and that discussion will not be repeated here.

Microwave-type solids moisture analyzers have been used to measure the water content of plastic powders, chips and pellets, soaps, grains, powdered clay, paper, hardboard, and plastic products. To measure the moisture content of moving webs or other materials that are thinner than 0.02 in. (0.5 mm), multiple transmission is required.

Because the absorption of microwaves is affected by both bulk density and solids temperature, both of these variables must be measured and compensated for if precise readings are desired. Such a compensated unit is illustrated in a gravity flow (or pneumatically conveyed) bypass application in Figure 8.34d.

Basis Weight Compensation If contactless moisture detection is desired for a conveyor belt application where the product density varies, a microwave type analyzer can be compensated. Basis weight compensation can be obtained by the addition of a low-activity gamma radiation source as shown in Figure 8.34e. Basis weight compensation is available not only on conveyor belt installations but also for measurements in chutes and in vertical ducts and pipes.

Moisture in Coal Microwave analyzers can also be used to measure the moisture content of coal as it is being conveyed on a belt, without sampling or crushing (Figure 8.34f). These units are also automatically corrected for density and temperature variations and can detect the moisture content within about 0.5% over a range of 0 to 20%.

© 2003 by Béla Lipták

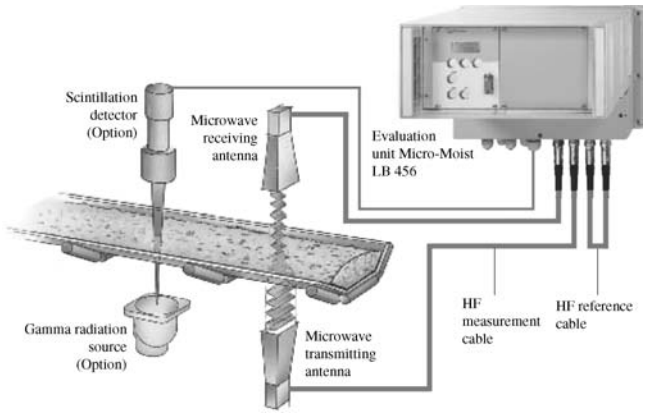

FIG. 8.34e
Noncontacting moisture analyzer can be provided with gamma radiation densitometer to compensate for variations in process density. (Courtesy of Berthold Technologies.)

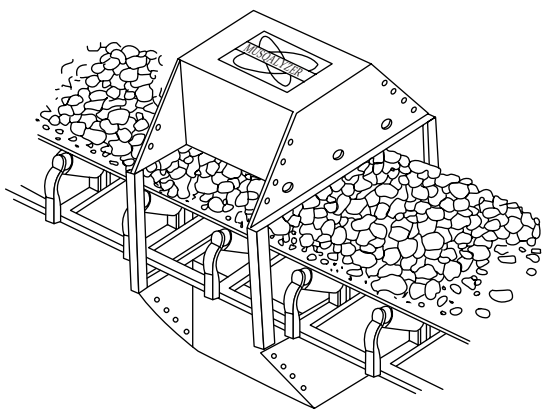

FIG. 8.34f
Continuous moisture-in-coal analyzer utilizing the microwave principle.

Sugar Industry Applications Microwave moisture analyzers have also been developed for such applications as the measurement of the dry substance content in the process of sugar extraction. These sensors can measure the sugar concentration both in the pipelines and in the sugar tanks or crystallizers. The pipeline units are flanged at both ends, whereas the tank mounted ones can be inserted through the nozzles of the crystallizers or other containers (Figure 8.34g).

Capacitance Moisture Gauge

The capacitance-type hygrometer has been described in connection with Figure 8.33e in Section 8.33. In capacitance-type measurements of moisture, the great difference in dielectric constants between the dry sample and water is utilized to perform the measurement. As the changes in moisture content affect the dielectric constant, the measured capacitance reflects that change and the variations are read as changes in moisture level.

Sensor Designs The measuring probe may consist of stainless steel electrodes embedded in plastic or in other insulators

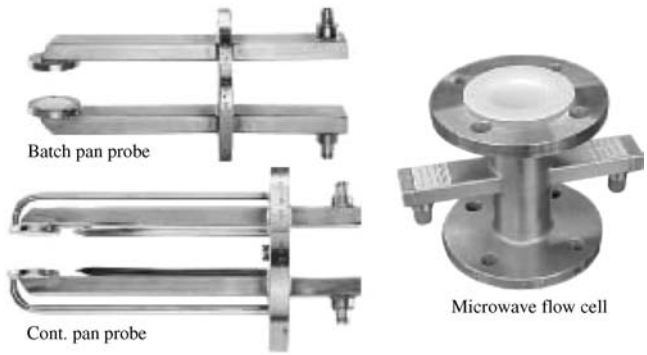

FIG. 8.34g
Sugar concentration measurement by the use of microwave analyzers. (Courtesy of Berthold Technologies.)

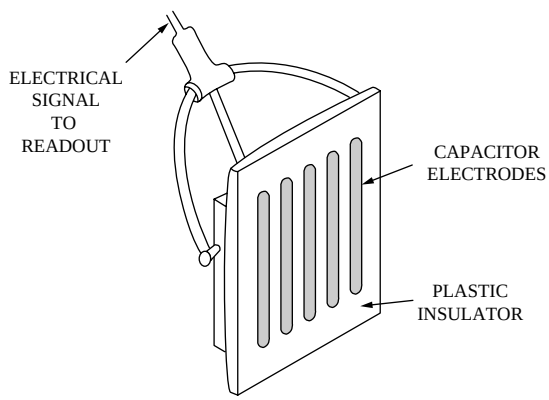

FIG. 8.34h
Capacitance-measuring head for moisture detection in solids.

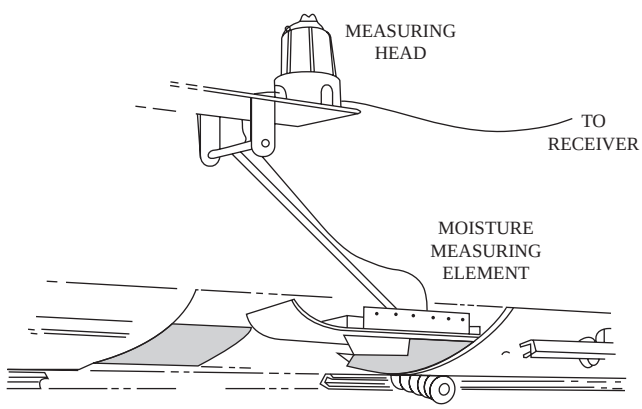

FIG. 8.34i
Ski-type probe for solids moisture detection.

to form the measuring head of a capacitor (Figure 8.34h). The probe or measuring head lightly contacts the process material, which serves as the capacitor dielectric (the nonconducting material between the capacitor plates).

Another type of capacitive element is designed for moisture measurement in powders that are transported on conveyors. In that case, the capacitor plates are mounted at right angles to each other as shown in Figure 8.34i. In this design,

© 2003 by Béla Lipták

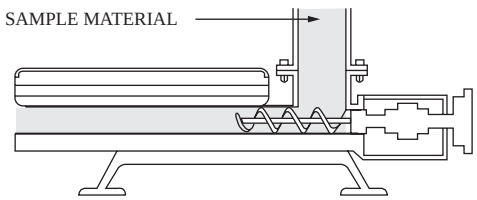

FIG. 8.34j
Force-fed measuring cell.



FIG. 8.34k
Dielectric constant monitoring probe for the remote measurement of soil moisture. (Courtesy of Automata Inc.)

the horizontal electrode rides on the powder surface while the vertical electrode is submerged. Other variations include force-fed measuring cells as shown in Figure 8.34j.

Capacitance is also used to detect the moisture content of agricultural products such as grains. The same principle can also be utilized to detect the moisture content of the soil by the insertion of a probe. Such a probe might consist of two electrodes with an insulating gap between them, and the capacitance circuit is used to measure the soil moisture as the dielectric constant of the insulator varies with the soil's moisture content.

The probe of the soil moisture monitor shown in Figure 8.34k is 3/4 in. in diameter and 27 in. long. It is normally installed vertically with intimate contact with the soil. The top 9 in. of the probe are passive, and only the bottom 18-in. section is used for measuring the soil moisture. The probe generates 0 to 5 V or 4 to 20 mA outputs, and several probes can be connected to a central computer, which can sound alarms or can automatically operate irrigation systems.

Capacitance Measurement Capacitance can be measured by two methods. One utilizes a capacitance bridge, which is analogous to the Wheatstone bridge, used for resistance measurement. Here, the bridge is excited by a radio frequency (RF) alternating current (AC) signal while a servomotor continuously balances the capacitive reactance of the measuring capacitor with the reactance of a known capacitor. (Capacitive reactance of an AC circuit is the part of the impedance that is due to capacitance.)

Alternatively, the measuring capacitor can be connected in parallel with a known inductance to form a parallel resonant circuit. This circuit is powered by a constant frequency source. In this case, the output voltage becomes a function of connected capacitance. At resonance, this output is a maximum and decreases nonlinearly for larger and smaller values of capacitance. The nonlinearity can be minimized by an appropriate choice of circuit parameters and by narrowing the operation of the instrument to a limited portion of the resonance curve.

Limitations In all capacitance measurements, the capacitance of the solids is a not a unique function of the moisture content of the process material; it is also affected by such factors as particle size, packing, and material density. Therefore, such moisture measurements will be accurate only if these variables are constant or can be compensated for.

Resistance Moisture Gauge

The electrical resistance of nonconducting solids is also a function of their moisture content. Instruments that take advantage of this fact use a balanced bridge circuit to detect these resistance changes (Figure 8.34l).

In this design, the measuring electrodes form a part of the bridge circuit as they contact the process solids. A regulated voltage is applied to the electrodes so that a small current flow is maintained through the solids. The changes in the moisture level result in a change of electrode current. Therefore, the amount of bridge imbalance is related to the moisture content. This probe also detects the capacitive reactance caused by the moisture level changes, but this portion of the measurement is continuously balanced by servomotor driven reference capacitor.

Limitations The accuracy of this measurement is strongly influenced by the contact pressure between sample and electrodes, the operating temperature, packing density, and particle size. In addition, the resistance values that are measured are very high, so good insulation is required at the electrodes to prevent leakage currents from introducing an error.

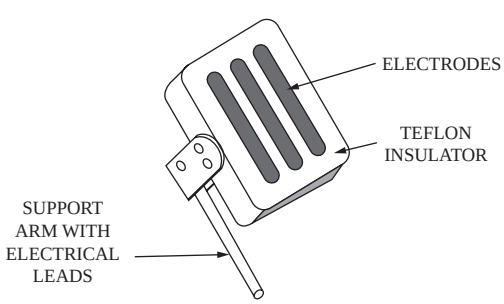

FIG. 8.34l
Resistance measuring head.

© 2003 by Béla Lipták

Impedance Moisture Gauge

The moisture content solids can also be measured indirectly by detecting the moisture in the atmosphere above or near the process solids. The atmosphere near the solids is in equilibrium with the moisture content of the process materials. Therefore, several of the instruments discussed in Sections 8.32 and 8.33 can be used in this type of measurement.

In particular, the change-of-impedance type of hygrometer is well suited, because its sensing element is small and can be easily mounted close to the solids surface (see Figure 8.33j). However, for this measurement to be effective, the element must be situated so that no drafts or convection currents occur, because even small air movement will influence the moisture measurement.

Nuclear Magnetic Resonance

A rather expensive solids moisture analyzer design is based on the phenomenon of nuclear magnetic resonance (NMR). NMR is capable of distinguishing the different atoms within a sample. When these atoms are in a constant magnetic field, the absorption characteristics of the nucleus of these atoms will be different and will be reflected by their RF energy. The advantages of the NMR method of moisture measurement include speed, accuracy, and nondestructive nature, whereas its disadvantage is high cost.

Radio Frequency Absorption

Similar to microwaves, the attenuation of RF radiation by the process solids can also be used to detect moisture. The water molecules absorb the RF energy in the form of molecular motion. By means of special electrodes, portable units have been marketed for sheet-paper moisture measurements. On-line, continuous moisture analyzers are also available for paper, food, chemical, gypsum wallboard, lumber, and other flat products. The analyzer must be calibrated to the particular product under test.

High-temperature RF moisture transmitters are also available for services up to 500°F (260°C). The analyzer can be installed inside dryers or kilns and is capable of continuous operation in contaminated atmospheres. All electronic components are mounted outside the kiln.

CONCLUSIONS

Of the methods available for moisture measurement in solids, the nuclear moisture gauge represents the most refined and accurate design. Other methods, such as infrared, microwave, and RF absorption, can also be used, particularly when the other process variables that affect the reading, such as temperature and particle size, are kept constant or are compensated for.

Capacitance-type instruments can be used effectively on sheet paper, cardboard, and other materials where such factors as particle size and packing density are constant.

Bibliography

Botsco, R., Microwave moisture measurement, Instrum. Control Sys., May 1970.

Dubois, R., van Vuuren, P., and Tatera, J., "New Sampling Sensor Initiative," An Enabling Technology, 47th Annual ISA Analysis Division Symposium, Denver, CO, April 14–18, 2002.

Feber, G., Digital-to-analog converter with neutron probe or measuring moisture, Hutn Listy (Czechoslovakia), September 1982.

Fussell, E., "Molding the Future of Process Analytical Sampling," *InTech*, August 2001, 32.

Gardner, R. C., Moisture/basis weight infrared gage for paper, InTech, January 1968.

Garverick, L. and Senturia, S. D., MOS Device for AC Measurement of Surface Impedance with Application to Moisture Monitoring, IEEE Trans. Electron. Devices, January 1982.

James, T., Instrumentation in steelworks for coke moisture measurement, Steel Times, July 1982.

Kohler, H. M. and Mathew, A., Continuous in-situ and elevated temperature moisture measurement in high particulate reactive processes, ISA 1996 Conference Paper #96–002.

L. F. Ballard, Instrumentation for Measurement of Moisture; Literature Review and Recommended Research, Highway Research Board, National Research Council.

Lee, L.Y., On-line Moisture Analyzers, InTech, May 1984.

McMahon, T. K., "The New Sampling/Sensor Initiative," *Control*, August, 2001.

McKinley, J. J., Using permeation tubes to create trace concentration moisture standards, National Conference of Standards Laboratories Conference, Atlanta, GA, July 1997.

Mettes, J. et al., Multipoint PPM moisture measurement using electrolytic cells, ISA Conference, Houston, TX, October 1992.

P. J. Geary, Measurement of Moisture in Solids: A Survey Based on Scientific and Technical Literature, Sira Institute, Chislehurst, UK (ASIN 0900223006).

Paper and Board Moisture Measurement, Report PB83–866863, NTIS, Springfield, Virginia, June 1983.

Salgado et al., Neutron Gage for Coke Moisture Measurement in the Steel Industry, International Atomic Energy Agency, Vienna, Austria 1982.

Scelzo, M. J., The trend is toward processing and measurement at ultralow moisture levels, Meas. Control, February 1992.

Sherman, R. E., *Process Analyzer Sample-Conditioning System Technology*, New York: John Wiley & Sons, 2002.

Sinibaldi, F. J. and Wenner, S. R., Can a TAPPI bore test measure moisture accurately? TAPPI, March 3, 1982.

Thomson, M., "Interfacing Sample Handling Systems for On-Line Process Analyzers," www.measurementation.com.au/tp-1.htm, January 14, 2002.

Van den Berg, F. W. J., Hoefsloot, H. C. J., and Smilde, A. K., "Selection of Optimal Process Analyzers for Plant-Wide Monitoring," *Analytical Chemistry*, 74(13), 3105–3111, 2002.

Whiting, D. and Nagi, M., Evaluation of Troxler Model 4430 Water/Cement Gauge: Final Report, American Society of Civil Engineers, March 1997.

© 2003 by Béla Lipták

8.35 Molecular Weight

A. BRODGESELL (1969, 1982) **B. G. LIPTÁK** (1995, 2003)

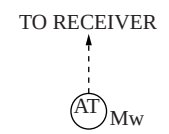

Flow Sheet Symbol

Applications: Measurement of the molecular weights of polymers and of other larger molecules

Types:
A. Membrane osmometers
B. Vapor pressure osmometers
C. Light-scattering photometers
D. Viscometers (also see Sections 8.63 and 8.64)
E. Liquid chromatographs, gel-permeation (also see Section 8.13)
F. End group determination
G. Electron microscopy (also see Section 8.47)
H. Ultracentrifuge sedimentation

Design Pressure: Atmospheric

Design Temperature: 300°F (150°C)

Element Material: Glass, Kel-F,® gel-cellophane, stainless steel

Inaccuracy: 5 to 10%

Range: Molecular weight of 50 and higher

Costs:
A, B, C. About $10,000
D. See Sections 8.63 and 8.64. Mooney viscometers, processability testers, and rubber analyzers, from $35,000 to $80,000
E. Over $50,000
G. About $100,000
H. Laboratory centrifuges, from $3000 to $10,000

Partial List of Suppliers: For liquid chromatographs, see Section 8.13, and for viscometers, see Sections 8.63 and 8.64.

Advanced Instruments Inc. (A, B) (www.aitests.com)
Alpha Innotech Corp. (www.alphainnotech.com)
Ampho Tech Ltd. (www.amphotech.com)
Baartlett-Williams Sci., (www.bartlett-williams.com)
Beckman (H) (www.astbury.leeds.ac.uk)
Beckman Coulter (E) (www.beckman.com)
B&H (G) (www.bhphotovideo.com)
Bohlin Rheology (D) (www.bohlinusa.com)
C.W. Brabender Instruments Inc. (D) (www.cwbrabender.com)
Bourevestnik Inc. (A, B) (www.bourevestnic.com)
Brookfield Engineering Laboratories Inc. (D) (www.brookfieldengineering.com)
Brookhaven Instruments (www.bic.com)
BTG Inc. (D) (www.btghome.com)
Cambridge Applied Systems Inc. (D) (www.cambridge-applied.com)
Cole-Parmer Instrument Co. (www.coleparmer.com)
Dennis Kunkel Microscopy (G)(www.denniskunkel.com)
Dynatrol Viscosity Systems (D) (www.dynatrolusa.com)
Electron Microscope Unit (G) (www.mos.org.sln)
FEI Co. (G) (www.feicompany.com)
Gynkotek HPLC Inc. (E) (www.gynkotek.com)

© 2003 by Béla Lipták

Hewlett Packard (E) (www.hp.com)
HPLC Technology Co. (E) (www.hplc.co.uk)
Knauer Co.(A, B) (www.knauser.net)
Leo Electron Microscopy (G) (www.leo-usa.com)
Malvern Instruments (www.malverninstruments.com)
Millipore S.A. (www.millipore.com)
Nametre Co. (D) (www.nametre.com)
Pegasus Scientific Inc. (www.pegasusscientific.com)
Perkin-Elmer Corp. (www.instruments.perkinelmer.com)
Polymer Laboratories Ltd. (www.polymerlabs.com)
Precision Detectors Inc. (www.precisiondetectors.com)
Protein Solutions (www.protein-solutions.com)
Proteus di Marchi Fabio (G) (www.proteus-lab.com)
Regis Technoligies Inc. (E) (www.registech.com)
Rohm Haas (E) (www.rhcis.com)
Scanning Electron Microscope (G) (www.usyd.edu.au/sv/emu)
Siemens Energy & Automation Inc. (E) (www.sea.siemens.com)
Solartron Mobrey (D) (www.solartronusa.com)
Techne Inc. (D) (www.techneusa.com)
Thomson Instrument (E) (www.hplc.com)
Varian Inc. (www.varisninc.com)
Waters Corp. (E) (www.waters.com)
Wyatt Technology Corp. (www.wyatt.com)

INTRODUCTION

Molecular weight measurement of gases and vapors has already been discussed in the chapter on density in Section 6.10 and in several sections of this chapter. Therefore, this section will concentrate only on the measurement of liquid molecular weights. Some of the instruments used in the measurement of the molecular weights of larger molecules, such as viscometers or gel-permeation chromatographs, are treated in more detail in Sections 8.13, 8.29, and 8.64 of this chapter.

THE AVERAGE MOLECULAR WEIGHT

Polymers consist of large molecules formed by the bonding of relatively simple and similar parts. The size and shape of the polymer molecules are determined by the number of basic building blocks and by the way these are linked together. For example, the basic blocks might be arranged in chains of various lengths, in chains with branches, or in two chains linked in several places. Thus, while the molecular weight of the basic building blocks might be known, polymers are a mixture of molecular species covering a wide range of sizes, and no definite molecular weight can be assigned to them.

However, an average molecular weight of this molecular weight distribution can be determined and is useful in predicting the physical properties of the polymer. Among the methods available for the determination of the average molecular weight are osmometry, light scattering, viscometry, gel-permeation chromatography, end group determination, electron microscopy, ultracentrifuging, sedimentation, and diffusion.

Each of these methods yields an average that must be defined, since the averages obtained are not identical, as is illustrated by the following example.

Example Consider 10 lb of polymer consisting of the following:

5 lb of molecular weight 10,000
3 lb of molecular weight 20,000
2 lb of molecular weight 120,000

The average of the weight fractions yields

$$10\overline{M} = 5\times10,000 + 3\times20,000 + 2\times120,000 \qquad \textbf{8.35(1)}$$

$$\overline{M} = 35,000$$

The average molecular weight obtained is called the weight average and is designated by Mw.

The average of the mole fraction yields

$$\frac{10}{\overline{\overline{M}}} = \frac{5}{10,000} + \frac{3}{20,000} + \frac{2}{120,000} \qquad \textbf{8.35(2)}$$

$$\overline{M} = 15,000$$

This average is called the *number average molecular weight* and is designated by Mn.

The averages obtained are not identical. The weight average emphasizes the large molecules, and the number average the small ones. For this reason, an average molecular weight must always be defined. In general, Mw and Mn are defined as:

$$Mw = \frac{\Sigma WiMi}{\Sigma Wi} = \frac{\Sigma niMi^2}{\Sigma niMi} \qquad \textbf{8.35(3)}$$

$$Mn = \frac{\Sigma Wi}{\Sigma ni} = \frac{\Sigma niMi}{\Sigma ni} \qquad \textbf{8.35(4)}$$

where ni represents the number of moles, Wi the weight of the fraction, and Mi the molecular weight of molecules of

© 2003 by Béla Lipták

size i. Additional averages can be defined as

$$M_z = \frac{\Sigma niMi^3}{\Sigma niMi^2} \qquad \textbf{8.35(5)}$$

and

$$Mv = \left(\frac{\Sigma niMi^{a+1}}{\Sigma niMi} \right)^{1/a} \qquad \textbf{8.35(6)}$$

where a is defined by the equation

$$[\eta]K(Mv)^a \qquad \textbf{8.35(7)}$$

and $[\eta]$ is the intrinsic viscosity of the polymer, and K is a constant. The definition of intrinsic viscosity is given under the discussion of viscometers in this section.

OSMOMETERS

Osmotic pressure is defined as the pressure that must be applied to the solution to stop osmosis from the pure solvent. Osmotic pressure, π, is related to solution concentration and molecular weight of the solute as given by Equation 8.35(8).

$$\pi = \frac{RT}{M}c + Bc^2 + Cc^3 \qquad \textbf{8.35(8)}$$

where R is the ideal gas constant, T is absolute temperature, c is the solution concentration, and B and C are virial coefficients.

The first term of the equation is the van't Hoff relationship for ideal solutions. However, polymer solutions are anything but ideal, so at least the second term of Equation 8.35(8) can never be neglected. Because there are two unknowns, M and B, in the equation, at least two measurements are required. Equation 8.35(8) is therefore rewritten as

$$\pi/c = \frac{RT}{M} + Bc + Cc^2 \qquad \textbf{8.35(9)}$$

The measured values of π are plotted as π/c vs. c. The measurement points are linearly extrapolated to c = 0 where the terms containing the unknown virial coefficients go to zero. The value of M can then be calculated from the relationship given in Equation 8.35(10).

$$M = \frac{RT}{(p/C)_c} = 0 \qquad \textbf{8.35(10)}$$

The molecular weight M thus obtained is the number average molecular weight Mn.

The Membrane Osmometer

The membrane osmometer (Figure 8.35a) consists of two compartments separated by a semipermeable membrane. A pure solvent and a dilute polymer solution are introduced into the two compartments, respectively. The membrane acts as a filter to permit passage of solvent molecules but not that of the polymer. Migration of solvent molecules into the solution results in a change in pressure between the two compartments until osmotic pressure is reached. Osmotic pressure is defined as the pressure that must be applied to the solution to stop osmosis from the pure solvent. It is used to obtain the number average molecular weight.

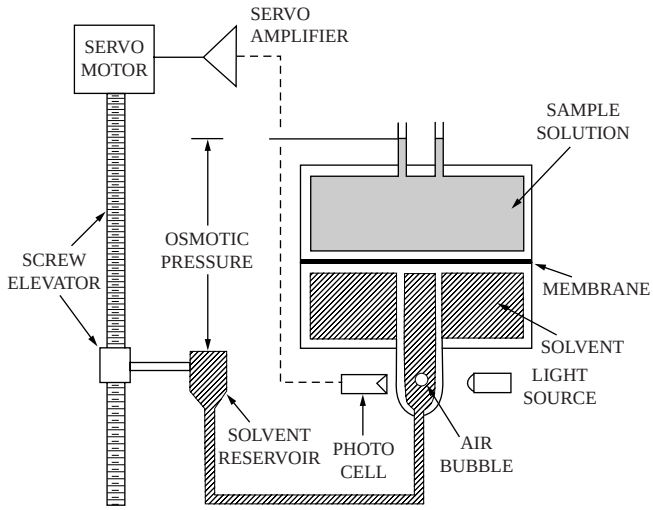

FIG. 8.35a
Membrane-type automatic osmometer.

Static osmometers are provided with a capillary connection to the solution compartment so that osmotic pressure can be read as hydrostatic head. The principal disadvantage of the static osmometer is the long time, which is required to reach equilibrium 1 to 2 hr and longer. Automatic osmometers (Figure 8.35b) are available, which determine osmotic pressure dynamically. In these units, the rate of solvent flow through the membrane is measured as a function of externally applied pressure.

Automatic Osmometers One type of automatic osmometer has a solvent reservoir mounted on a screw elevator and connected to the solvent side of the membrane by a capillary in which there is a small air bubble. A light source and photocell sense the position of the air bubble as it tends to move with any flow of solvent in the capillary. The photocell output activates a servomotor, which, in turn, positions the solvent reservoir to reduce pressure on the solvent compartment, thus stopping osmotic flow. As a result, the static head of the solvent is exactly opposed to the osmotic pressure of the solution. The hydrostatic head on the solvent side can be continuously displayed in digital form, or the pressure can be recorded providing a permanent record of the measurement (Figure 8.35c).

Another automatic osmometer utilizes a diaphragm to sense an increased pressure in the solvent compartment, which results in a change of capacitance in an oscillator. A signal to a servomotor positions a plummet in the manometer to reduce the pressure on the solvent side of the membrane by an amount equal to the osmotic pressure.

Automatic osmometers are thermostatically controlled, because temperature enters into the measurement. With automatic osmometers, the operating temperature is a minimum

© 2003 by Béla Lipták

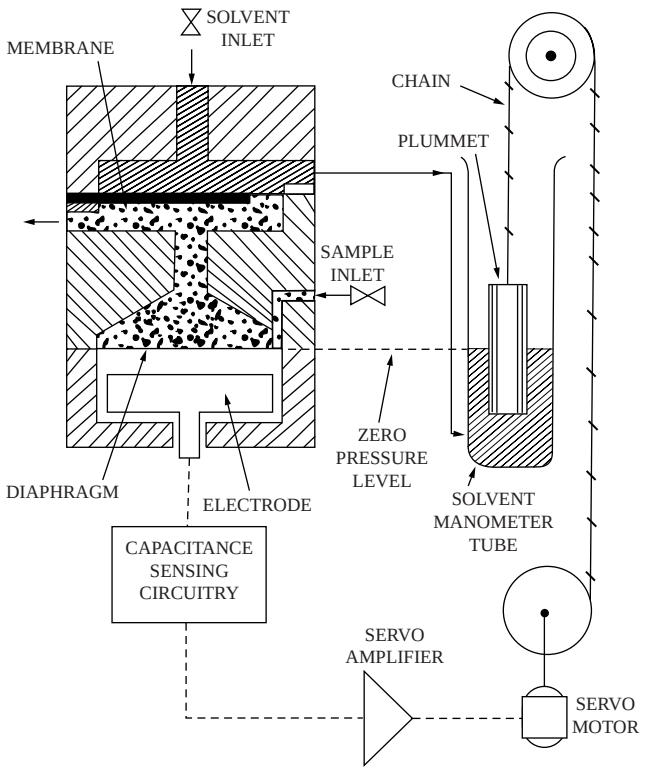

FIG. 8.35b
Automatic osmometer.

Sample: Polystyrene Temperature: 36°C Solvent: Toluene
Density: 0.865 g/cm³ @ 27°C

Concentration C/100cr	0.5	1.5	2.0
Solvent Pressure P_o cm	5.00	5.00	5.00
Sample Pressure P cm	7.00	12.5	16.00
$\pi = P - P_o$	2.00	7.50	11.00
π/C	4.00	5.00	5.5

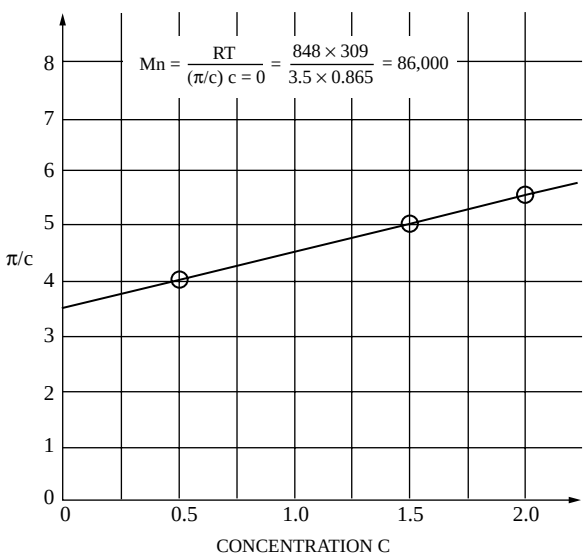

FIG. 8.35c
Membrane osmotogram.

of 10°F (6°C) above ambient to ensure good temperature control. However, for a given sample, the lowest possible operating temperature is selected to ensure longer membrane life and to inhibit possible corrosion.

Static osmometers are not provided with temperature control, so some means of maintaining a constant temperature must be provided. Usually, the measurement is made in a constant-temperature bath. The operating temperature depends on the melting point of the sample and the lowest temperature required to keep it in solution.

Vapor Pressure Osmometers

The vapor pressure of any solvent is lowered by the addition of solute. If a pure solvent and a solution are placed in two containers and connected in a closed system, the pure solvent will evaporate and condense into the solution. The resultant temperature difference, due to the latent heat of evaporation of the solvent, can be detected as an indication of the molecular weight of the solute. In practice, the temperature difference is read as the output voltage of a resistance bridge using high-accuracy temperature sensors (Figure 8.35d).

The relationship between the bridge output voltage ΔV, the solution concentration c, and the average molecular weight Mn is given by Equation 8.35(11).

$$\left(\frac{\Delta V}{c}\right)_{c=0} = \frac{K}{Mn} \qquad \textbf{8.35(11)}$$

where K is the calibration constant for the particular combination of solvent and type of thermistor used.

Although the amount of drop in vapor pressure is only a function of the amount of solute in solution and of the solute molecular weight, ΔV is a relative quantity depending on the

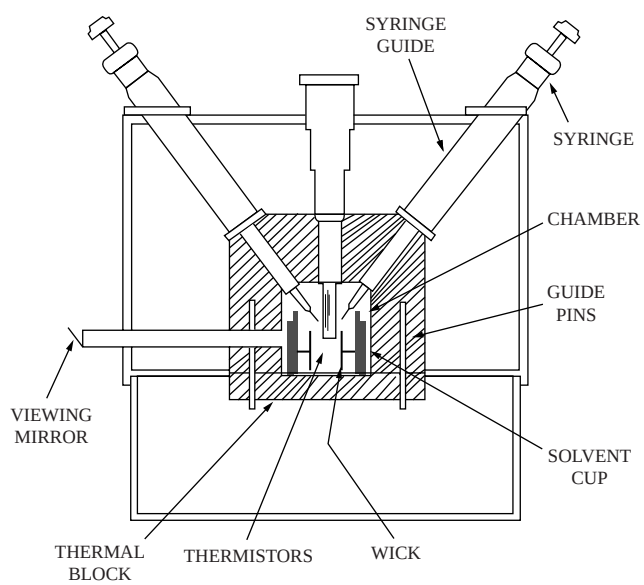

FIG. 8.35d
Vapor-pressure osmometer.

© 2003 by Béla Lipták

Sample: Fatty Acid Temperature: 35°C Solvent: Toluene
Calibration Factor K = 350

Concentration C gm/liter		5	7.5	1.5
1. Output	ΔV	1.40	2.15	4.35
2. Output	ΔV	1.40	2.16	4.35
3. Output	ΔV	1.41	2.14	4.35
	ΔV average	1.40	2.15	4.35
	ΔV/C	0.280	0.287	0.290

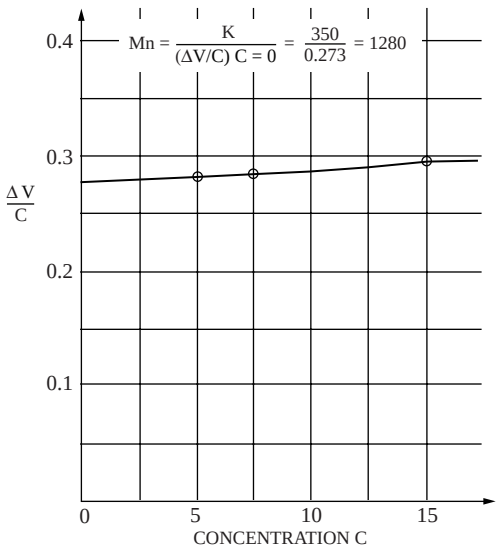

FIG. 8.35e
Vapor-pressure osmotogram.

solvent, operating temperature, and temperature-sensing element used. The instrument, therefore, must be calibrated with a known solution.

In practice, several values of ΔV are obtained at different concentrations, and these are plotted on a graph of ΔV/c vs. c (Figure 8.35e). The graph is than extrapolated linearly to c = o and the value of K determined. Once the value of K is known, Mn can be determined in the same manner for any polymer in the solution.

The vapor-pressure osmometer consists of a thermostated chamber saturated with solvent vapor. Two thermistor beads are suspended in the chamber, and syringe guides are built into the chamber. Using the syringes, a drop of solvent and a drop of solution are placed on the reference and measuring thermistor, respectively.

As the solvent condenses, it warms the measuring thermistor. Therefore, its electrical resistance decreases. The thermistors are part of a resistance bridge whose output is in proportion to the temperature difference between measuring and reference thermistor. The resistance bridge output ΔV is plotted on a graph of ΔV/c vs. c.

The applicability of this instrument is limited because of the small difference in temperatures that need to be detected. Typically, for a 1% solution of 50,000 molecular weight polymer, the temperature difference is on the order of 0.001°F (0.0006°C).

LIGHT-SCATTERING PHOTOMETER

Polymer molecules dissolved in a suitable solvent cause scattering of the incident light. From the intensity and distribution angle of the scattered light, the weight average molecular weight, Mw, can be determined. When the molecules are small in comparison to the wavelength used, the scattered light has the same intensity for all angles of observation except for its polarization. For such molecules, a single observation at 90° to the incident light beam is sufficient.

If molecular size approaches the wavelength of light used, the light is scattered by portions of the molecule, which are widely separated. The light will undergo destructive interference, reducing the intensity of scattering. Destructive interference is a function of the light beam's angle. In other words, interference will be zero in the direction of the incident light and will increase with the angle of observation.

The Zimm Plot

The Zimm plot (see Figure 8.35f) utilizes data taken over as large an angular range as possible and extrapolated to

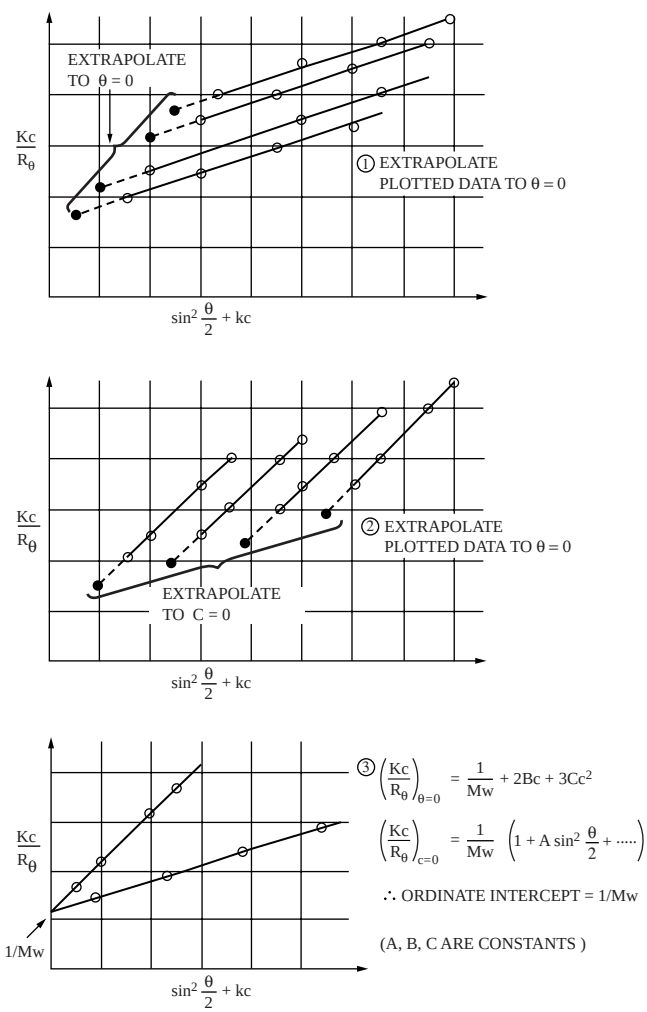

FIG. 8.35f
Zimm plot construction.

© 2003 by Béla Lipták

zero angle. The ordinate is intercepted at zero angle, when the concentration (1/Mw) is zero. The ordinate of the Zimm plot is Kc/R_θ and the abscissa is $\sin^2(\theta/2) + Kc$, where

$$K = \frac{2\pi^2 n^2 \left(\frac{dn}{dc}\right)}{A\lambda^4} \qquad \textbf{8.35(12)}$$

where

n = index of refraction of the solution
A = Avogadro's number
λ = wavelength of light used
θ = angle of observation
$R\theta$ = Rayleigh ratio at the wavelength used for the fluid the sample cell is immersed in (ratio of intensities of scattered light to incident light)
c = solution concentration
K = arbitrary constant chosen to give a convenient spread between data points
$\frac{dn}{dc}$ = change of refractive index with concentration

To obtain the Zimm plot, four concentrations are usually prepared along with pure solvent, and the data are collected at a number of incident light angles (10 or more). The scattered intensity for a reference substance (I_s) is measured at 90°. The change in refractive index with concentration (dn/dc) is obtained with a differential refractometer.

Step 1 $I\theta = I_s$ (calibration factor, which is supplied with instrument)

If the scattered light intensity ($I\theta$) of the material in which the cell is immersed is being measured, $I\theta$ is obtained directly.

Step 2 Correct each measurement for solvent scattering,

$$I_\theta = I_\theta \text{ solution} - I_\theta \text{ solvent}$$

and correct for incident light polarization,

$$I \text{ corrected} - I_\theta \times \alpha$$

where $\alpha = \sin\theta$ for vertically polarized incident light and $\alpha = \frac{\sin\theta}{1+\cos^2\theta}$ for unpolarized incident light.

Step 3 Calculate K from Equation 8.35(12).

Step 4 Calculate the Zimm coordinates from Equations 8.35(13) and 8.35(14).

$$\frac{Kc}{R_\theta} = \frac{K}{I \text{ corrected}} \times \frac{I\theta}{R\theta} (\text{ordinate}) \qquad \textbf{8.35(13)}$$

and

$$\sin^2\left(\frac{\theta}{2}\right) \times kc \text{ (abscissa)} \qquad \textbf{8.35(14)}$$

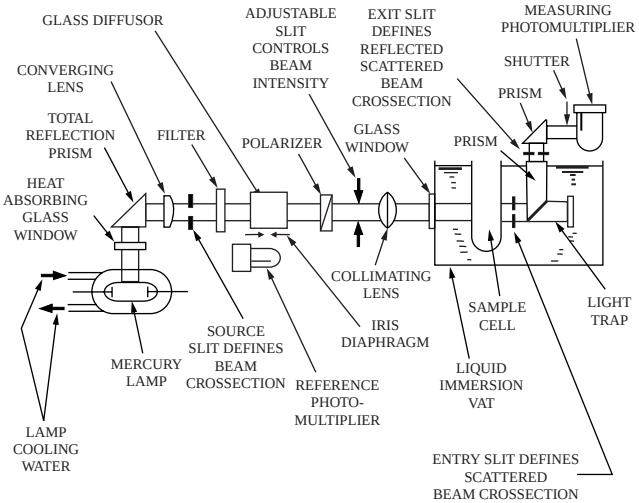

FIG. 8.35g
Light-scattering photometer.

The Photometer

A narrow, high-intensity beam of light is generated by a light source, which usually is a mercury vapor lamp. It is provided with a filter to provide green light at 5461 Å or blue light at 4358 Å (Figure 8.35g). This beam is focused on the sample cell, and light that is passing through the sample cell is absorbed in a light trap to avoid reflective interference with the measurement. The light, which is scattered by the sample, is converted by the measuring photomultiplier to an electrical current whose intensity is measured.

The photomultiplier is mounted on a platform, which can be rotated so that the viewing angle can be varied from 30 to 150° to the incident light beam. Since the light source intensity always varies somewhat, part of the generated light beam is permitted to impinge on a reference photomultiplier. The reference photomultiplier output can then be used to automatically compensate the measurement. Another way to perform the compensation is as follows: $I_\theta = i_\theta/i_s$, where I_θ represents the true measurement intensity, i_θ is the output of the measurement photomultiplier, and i_s is the output of the the reference photomultiplier.

Design variations include the use of an immersion vat for the sample cell. This vat is filled with a fluid whose refractive index is the same as that of glass to eliminate refraction at the sample cell.

The sample for this instrument must be very carefully de-dusted by filtering to remove all suspended particles. The use of a sample vat does not eliminate the requirement for removing all dust from the sample.

VISCOMETERS

The various devices that are available for viscosity measurement are discussed in Sections 8.62, 8.63, and 8.64.

© 2003 by Béla Lipták

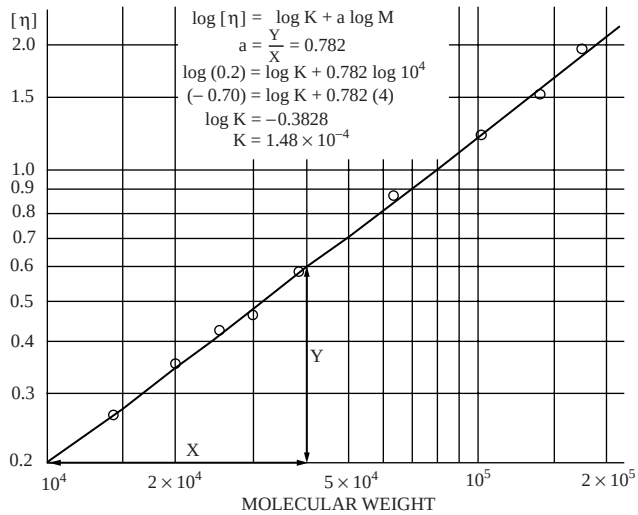

FIG. 8.35h
Viscometer calibration for K and a.

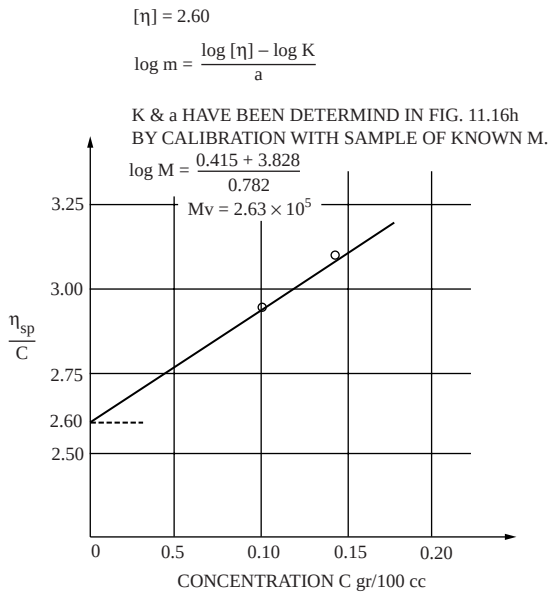

FIG. 8.35i
Determination of intrinsic viscosity and average molecular weight.

Viscosity vs. Molecular Weight

To determine the molecular weight of a polymer from viscosity measurement, the polymer's intrinsic or limiting viscosity must first be determined (Figure 8.35h). Intrinsic viscosity $[\eta]$ is defined by the relationships below:

$$[\eta] = \lim_{c\to 0} \frac{\eta - \eta_0}{\eta_0 c} = \lim_{c\to 0} \frac{\eta_{sp}}{c} \qquad \textbf{8.35(15)}$$

$$\eta_{sp} = \frac{\eta - \eta_0}{\eta_0} \qquad \textbf{8.35(16)}$$

where η is the viscosity of the solution, η_0 is that of the solvent, and c is the solution concentration in grams per milliliter or grams per deciliter.

Another definition of intrinsic viscosity is

$$[\eta] = \lim_{c\to 0} \frac{\text{In } \eta / \eta_0}{c} \qquad \textbf{8.35(17)}$$

Intrinsic viscosity is related to the molecular weight in accordance with the Mark-Houwink equation,

$$[\eta] = KM^a \quad \text{or} \quad \log [\eta] = \log K + a \log M \qquad \textbf{8.35(18)}$$

where K and a are constants for a given polymer-solvent system at the temperature of the viscosity measurement.

Intrinsic Viscosity

Viscosity measurements are made of a well fractionated or monodisperse polymer whose molecular weight is known or has been measured by some other method (Figure 8.35i). The intrinsic viscosity is calculated by plotting $(\eta - \eta_0)/\eta_0$ vs. c and by extrapolating linearly to c = 0. If the plot of $(\eta - \eta_0)/\eta_0$ vs. c does not fall on a straight line, log η/η_0 can be plotted vs. c for better linearity.

The values of intrinsic viscosity $[\eta]$ obtained are plotted as a function of the known molecular weight on log-log paper, and the constants a and K are evaluated. Once K and a are known, Mv for a polydisperse sample can be calculated.

The limitation of this method is that the empirical relationship $[\eta] = KM^a$ is valid only for linear polymers.

GEL-PERMEATION CHROMATOGRAPHY

This technique is based on the chromatographic separation of molecules by size. A solvent stream is split, and a polymer sample is added to one half of the stream. The solution is directed into a column packed with a rigid, cross-linked styrene gel. As the polymer moves into the column, the smaller molecules diffuse into the gel pores while the larger ones cannot penetrate and thus follow a shorter path. Molecules are therefore eluted from the column in the order of their sizes, with the smallest molecules eluting last (Figure 8.35j).

Differential Refractometer Sensor

Solution and solvent are passed through the measuring and reference cells of a differential refractometer in which the difference in refractive index between the sample and solvent is measured (Figure 8.35k). The output curve represents the relative abundance of molecules of a particular size from which a molecular weight distribution can be plotted and average molecular weights can be determined.

The differential refractometer utilizes a collimated light beam, which is passed through the reference and sample solutions and then is reflected back through both solutions by a mirror. The beam is split by another mirror, guaranteeing

© 2003 by Béla Lipták

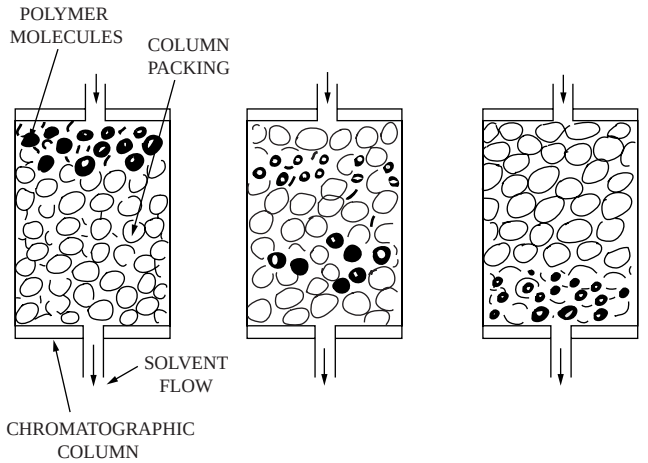

FIG. 8.35j
Three stages in the chromatographic separation of polymers: (left) at sample injection; (center) during separation; (right) at sample elution.

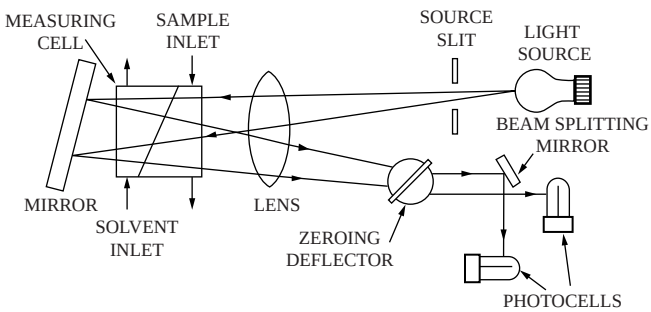

FIG. 8.35k
Schematic of refractometer used with gel-permeation chromatograph.

that equal amounts of light will fall on the two photosensors. The photosensor and two resistors form a resistance bridge whose output is proportional to the difference in the amounts of light falling on the photocells.

Changes in refractive index of the solution cause the light beam to shift so that unequal amounts of light will fall on the two photosensors. These refractive index variations are related directly to solution concentration. Thus, elution time and resistance bridge output will signal the relative abundance of molecules of a particular size.

The Complete Instrument

The instrument consists of a free-standing assembly containing the chromatograph portion refractometer, recorder, and control electronics.

The chromatograph portion consists of two sets of columns with column switching valves, sample injection valves, and solvent loop. Solvent from a reservoir is degassed in a heater, and flow is controlled by a positive displacement pump (Figure 8.13a).

The total solvent flow is split into two equal streams. One half is passed through the sample loop, and the other half serves as the reference. Both the sample and solvent are passed through two column banks, respectively, before entering the refractometer cell. The solvent is then returned to the reservoir, and the sample is discharged to a sample collector. Each 5-ml increment of sample volume discharged is marked automatically on the recorder trace to indicate elution time.

The electronics consist of several subassemblies, including refractometer controls, automatic sample injection controls, and the main control assembly.

Molecular Weight from Chromatograph Output

For the steps used in determining the molecular weight from the refractometer output curve, refer to Figures 8.35l, 8.35m, and 8.35n. To determine molecular weight from the

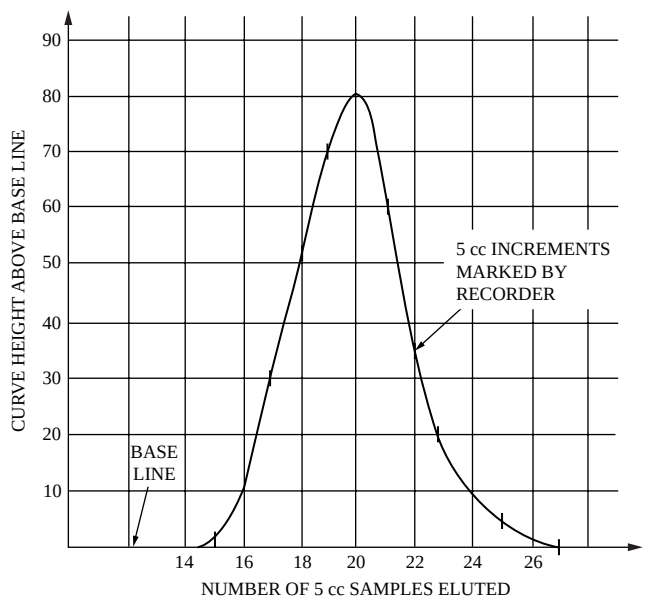

FIG. 8.35l
Chromatograph output distribution curve.

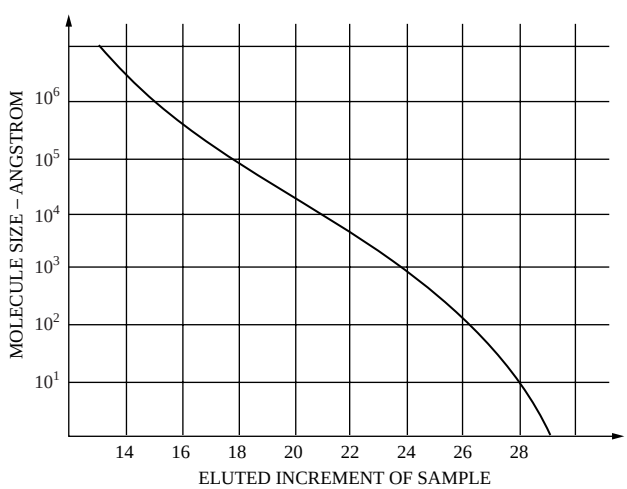

FIG. 8.35m
Calibration curve furnished with instrument.

© 2003 by Béla Lipták

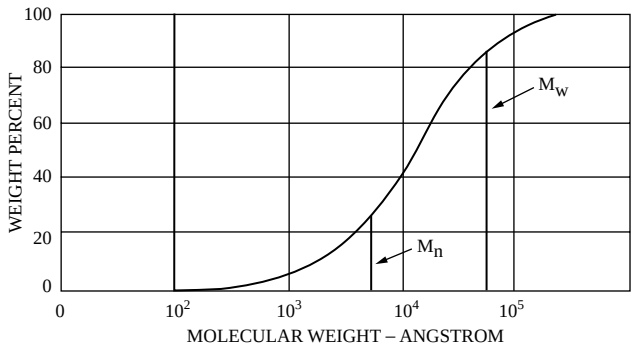

FIG. 8.35n
Weight percent cumulative plot.

gel-permeation chromatograph output, a table similar to Table 8.35o should be prepared. In the table, the columns are obtained as follows:

Column 1 In this column, each successive 5-ml fraction that is obtained from the chromatograph is numbered on the distribution curve (Figure 8.35l).

Column 2 Next, measure the height from the baseline to each numbered point on the distribution curve. The baseline in Figure 8.35l is drawn by the operator as shown in the diagram.

Column 3 Add successive heights to obtain cumulative height as shown.

Column 4 Normalize the data in Column 3 (0–100) by taking the individual cumulative heights and dividing them by the total cumulative height and multiplying the result by 100.

$$\left(\frac{\text{Col 3}}{374}\times 100\right) \qquad \textbf{8.35(19)}$$

Column 5 Tabulate the chain length from the calibration curve of count number vs. chain length in Figure 8.35m.

Column 6 Divide Column 2 by Column 5.

TABLE 8.35o
Determination of Molecular Weight from Chromatograph Output

1	*2*	*3*	*4*	*5*	*6*	*7*
Sample Count	*Height Above Baseline*	*Cumulative Height*	*Cumulative Weight Percent*	*Chain Length (Angstrom)*	*Number of Particles*	*Col. 2 × Col. 5*
14	0	374	100.0	3,000,000	0	0
15	1	374	100.0	1.000,000	0.0000	
	1,000,000					
16	10	373	99.8	450,000	0.0000	
	4,500.000					
17	30	363	97.0	200,000	0.0002	
	6,000,000					
18	50	333	89.0	80,000	0.0006	
	4,000,000					
19	70	283	75.7	30,000	0.0023	
	2,100,000					
20	80	213	57.0	15,000	0.0053	
	1,200,000					
21	60	133	35.5	9,000	0.0067	540,000
22	35	73	19.5	5,000	0.007	175,000
23	20	38	10.2	2,000	0.010	40,000
24	10	18	2.7	900	0.011	9,000
25	5	8	1.3	300	0.017	1,500
26	2	3	0.5	140	0.024	280
27	1	1	0.3	30	0.033	30
Totals	374					1071
	19,565,810					

© 2003 by Béla Lipták

Column 7 Multiply Column 2 by Column 5.

The number average molecular weight is obtained by dividing Column 2 by Column 6 totals.

$$\frac{374}{0.107} = 3500\text{Å} \qquad \textbf{8.35(20)}$$

The weight average molecular weight is obtained by dividing Column 7 by Column 2 totals.

$$\frac{19,565,810}{374} = 352,300\text{Å} \qquad \textbf{8.35(21)}$$

Figure 8.35n is obtained by plotting Column 4 vs. Column 5.

END GROUP DETERMINATION

Molecular weight determination by functional group analysis requires that the polymer molecule contain a known number of distinguishable groups. Such groups are carboxyl and hydroxyl groups or amino end groups. In linear polymers, the number average molecular weight is obtained as

$$\text{Mn} = \frac{2\text{m}}{\text{x}_e} \qquad \textbf{8.35(22)}$$

In Equation 8.35(22), m is the number of pounds of sample and x_e the number of moles of end groups. However, this method can only be used where the number of end groups is known, as is the case with linear polymers. The number of end groups can be determined chemically or by means of an infrared spectrometer, which was calibrated with a known sample. This method fails at molecular weights above approximately 30,000 because the fraction of end groups becomes too small to be detected.

ELECTRON MICROSCOPE

The optical microscope is limited in its power of resolution to the detection of objects that are larger than one-half of the wavelength of the shortest visible light used. This corresponds to approximately 8000 Å.

Electrons, however, do not behave only as particles but also as waves, with a wavelength of about 0.5 Å. Consequently, a beam of electrons can be used to detect particles much smaller than those visible by means of the optical microscope. In the electron microscope (Figure 8.35p), a heated filament provides a stream of electrons, which pass through a magnetic coil, acting as a condensing lens. Upon emerging from the object, the electrons pass through two additional magnetic coils, which act analogous to the objective and projector lenses of the optical microscope.

The focused electron beam impinges on a photographic film, where a much enlarged image is produced. The photographs can be further enlarged without distortion. Magnifications of 100,000:1 are possible. The lower limit of resolution obtainable is on the order of 15 to 20 Å.

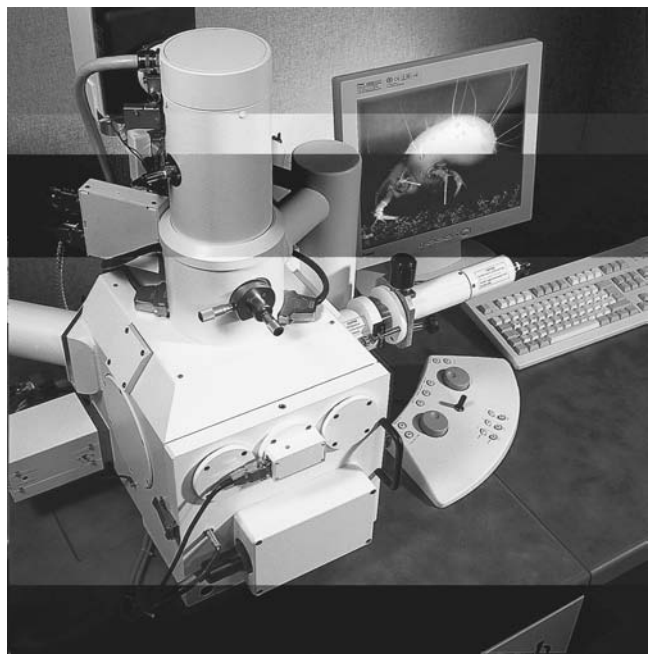

FIG. 8.35p
The electron microscope. (Courtesy of LEO Electron Microscopy.)

Transmission Electron Microscope

Transmission electron microscopes (TEMs) use electrons as *light source*, and their much lower wavelength makes it possible to get resolutions that are 1000 times better than those of a regular light microscope. The electron source at the top of the microscope emits electrons that travel through vacuum. The TEM uses electromagnetic lenses to focus the electrons into a thin beam, which travels through the process sample.

Depending on the density of the sample, some of the electrons will scatter and thereby disappear from the beam. At the bottom of the microscope, the unscattered electrons will hit a fluorescent screeen and produce a *shadow image*. The image can be studied directly by the operator or can be photographed and transmitted for evaluation by others.

Advantages and Limitations

The magnifying power of the electron microscope is sufficient to permit visual observation and measurement of polymer molecules. From a photograph of the polymer sample, the size of the molecules can be measured and plotted as molecular size distribution. Essentially, this distribution curve should be the same as the output curve of the gel-permeation chromatograph shown in Figure 8.35l. However, while the chromatograph automatically counts the number of molecules within each size range, the grouping and counting of molecules must be performed by the operator.

© 2003 by Béla Lipták

Since the microscope shows only molecular size, the makeup of the polymer molecule—the composition of its building blocks and distance between adjacent blocks—must be known before molecular weight can be calculated from the measured molecular size. One advantage of the electron microscope is that the molecular structure can be observed along with molecular size. In other types of measurements, the structure must be determined by independent measurements.

ULTRACENTRIFUGE

Sedimentation and diffusion measurements of polymer solutions both involve the frictional properties of the polymer molecules. Therefore, they are closely related, and both are needed to interpret the data obtained from the velocity ultracentrifuge.

Not all polymers are suitable for analysis by means of the ultracentrifuge. For the measurement to be successful, the polymer and solvent must differ in refractive index, the solvent must have a low viscosity, and the polymer must be soluble near room temperature. Finally, mixed solvents must be avoided because of complex corrections that must be made to the measurement.

Sedimentation Velocity

There are two different types of ultracentrifuge measurements. In the sedimentation velocity method, the centrifuge is operated at from 20,000 to 60,000 rpm rotational speeds. These produce centrifugal fields that equal several hundred thousand times the acceleration of gravity. Under these conditions, the polymer molecules move under the influence of these centrifugal forces against the opposition of frictional forces.

The instrument determines the rate of movement and provides a rapid means of estimating the size, shape, and molecular weight of macrosolutes. It also allows the calculation of the coefficients of sedimentation and diffusion if the sedimenting components are well separated, and it allows the calculation of effective mass of solute components, particle asymmetry, and molecular weight.

The rate of sedimentation is related to the ratio of molecular weight to the frictional force. The frictional force is determined independently by diffusion or viscosity measurement. The fact that a second, independent measurement is required is one of the principal disadvantages of the sedimentation velocity method, because a viscosity measurement alone can also be used to determine the average molecular weight.

Sedimentation Equilibrium

In the sedimentation equilibrium method, the centrifuge is operated at 10,000 to 30,000 rpm speeds for periods of several hours to days or weeks. Under constant conditions, the polymer will not pellet at the bottom of the cell but will be redistributed over time, with increasing concentration of solute as the distance from the center of rotation increases solely as a function of its molecular weight.

After a period of about a day, the effect of centrifugal forces on the solute particles will be balanced by diffusion, and the apparent concentration will no longer change. If the measurements are made with thermodynamically ideal solutions, the weight average molecular weight and higher averages can be obtained. In addition, homogenity with respect to Mw, association constants and aggregation states can also be calculated.

Instrument Construction

The ultracentrifuge consists of an aluminum alloy rotor, which is several inches in diameter, and a solution cell mounted within the rotor near its periphery. The rotor is mounted in an evacuated chamber that is provided with windows for observation of the solution in the cell. The rotor may be driven by air or by an electric motor operated oil turbine. Polymer concentration along the solution cell is measured by refractive index or light absorption detectors along the length of the cell.

CONCLUSIONS

Of the methods available for the determination of polymer molecular weight, none is ideally suited for in-line measurement, but the techniques of gel permeation and viscometry can be applied using automated sampling systems.

None of the methods produces a direct output in terms of molecular weight. Sedimentation and diffusion methods are not very useful for process applications because of the time required to obtain a measurement.

Gel-permeation chromatography, while its analysis time is in the order of 2 to 3 hr, provides a complete molecular weight distribution in addition to molecular weight averages.

Automatic membrane osmometers are relatively fast, but their useful range is between 10,000 and 300,000 molecular weight. At the lower end, special membranes can be used to extend the range to about 5000 molecular weight. Vapor pressure osmometers complement the useful range of the membrane osmometer at the lower end of the scale. The operating range of these instruments is up to approximately 20,000 molecular weight.

The analysis time and range of viscometers are comparable to those of the osmometers; however, their usefulness is limited to linear polymers. In terms of accuracy, range of application, and speed of analysis, the light-scattering photometer and the electron microscope offer the best choice. These instruments, however, are much more costly than other types, and their advantages rarely can justify the expense.

Bibliography

Ahuja, S., *Selectivity and Detectability Optimizations in HPLC,* John Wiley & Sons, New York, 1989.

Annual Book of ASTM Standards, West Conshohocken, PA: American Society for Testing and Materials, 2002, www.normas.com/ASTM/.

© 2003 by Béla Lipták

Bandrup, J., *Polymer Handbook*, John Wiley & Sons, New York, 1989.
Basker, V. R., Dutka, A. P., Crisalle, O. D., and Fricke, A. L., Evaluation of an online torsional oscillatory viscometer for Kraft black liquor, *Paperi ja Puu/Pulp and Timber*, 82(7), October 2000.
Bekturov, E., *Synthetic Water-Soluble Polymers in Solution*, Huethig and Wepf, Basel, Switzerland, 1986.
Berger, D., *The Art of the Scanning Electron Microscope*, Columbia University Press, New York, 1995.
Bullon, H. H., *Shear Rate Determination in a Concentric Cylinder Viscometer*, Defence Science and Technology Organization, NTIS accession Number AD-A315 366/5, July 1996.
Champness, P. E., *Electron Diffraction in the Transmission Electron Microscope*, Bios Scientific Publ., 2001
Control Staff, Supercritical fluid technology moves to the forefront, *Control*, June 1990.
Covey, T., Liquid chromatography/mass spectrometry for the analysis of protein digests, *Methods Mol. Biol.*, 61, 83–99, 1996.
Dolan, J. W. and Snyder, L.R., *Troubleshooting Liquid Chromatography Systems*, Humana Press, 1989.
Dubois, R., van Vuuren, P., and Tatera, J., "New Sampling Sensor Initiative," An Enabling Technology, 47th Annual ISA Analysis Division Symposium, Denver, CO, April 14–18, 2002.
Dutka, A. P., Crisalle, O. D., Fricke, A. L., and Kalotay, P., Evaluation of a capillary-coriolis instrument for online viscosity and density measurements of kraft black liquor, *Proc. TAPPI Process Control, Electrical and Instrum. Conf. (ISA)*, March 1997.
Ewing, G., *Analytical Instrumentation Handbook*, Marcel Dekker, New York, 1990.
Fussell, E., "Molding the Future of Process Analytical Sampling," *InTech*, August 2001, 32.
Helle, H., Valimaki, H., and Lekkala, J., Comparing a 10 MHz thickness-shear mode quartz resonator with a commercial process viscometer in monitoring resol manufacturing process, *Sensors and Actuators B (Chemical)*, B81(2–3), January 2002.
HPLC Columns: Theory, Technology and Practice, Uwe D. Neue, 1997.
Jutila, J. M., Guide for selecting gas and liquid chromatographs, *InTech*, August 1980.
LeRoy, M. J., Jr. and Gorland, S. H., Molecular weight sensor, *Instrum. Control Syst.*, 81–82, January 1971.
Lindsay, S., High performance liquid chromatography, *Analytical Chemistry*, by Open Learning Series, 1992.
Mehl, J. T. and Nicola, A. J., et al. Direct coupling of thin-layer chromatography with matrix-assisted laser desorption/ionization mass spectrometry, *Am. Lab.*, 30–38, 1998.
Meyers, R. A., Ed., *Encyclopedia of Analytical Chemistry: Instrumentation and Applications*, New York: John Wiley & Sons, 2000.
Niessen, W., Liquid chromatography – mass spectrometry, *Chromatographic Sci.*, 79, 1998.
Pasch, H. and Trathnigg, B., *HPLC of Polymers*, Springer Laboratory, 1998.
Quartz resonator with a commercial process viscometer, *Sensor and Abstracts B*, BB1(2–3), 2002.
Reed, G. A. and D. C. Bell, *Energy Dispersive Analysis in the Electron Microscope*, Bios Scientific Publ., 2002.
Sherman, R. E., *Process Analyzer Sample-Conditioning System Technology*, New York: John Wiley & Sons, 2002.
Snyder, L. R., *Practical HPLC Method Development*, John Wiley & Sons, New York, 1998.
Thomson, M., "Interfacing Sample Handling Systems for On-Line Process Analyzers," www.measurementation.com.au/tp-1.htm, January 14, 2002.
Van den Berg, F. W. J., Hoefsloot, H. C. J., and Smilde, A. K., "Selection of Optimal Process Analyzers for Plant-Wide Monitoring," *Analytical Chemistry*, 74(13), 3105–3111, 2002.
Wunderlich, T., Ultrasound pulse doppler method as a viscometer for process monitoring, Flow Meas. Instrum., 10(4), 1999.
Zhang, Z. and Reddy, R. G., Viscosities of Lead Silicate Slags, Minerals and Metallurgical Processing, 19(1), February 2002.

© 2003 by Béla Lipták

8.36 Nitrate, Ammonia, and Total Nitrogen

C. E. HAMILTON (1974, 1982) **B. G. LIPTÁK** (1995)
M. T. LEE-ALVAREZ (2003)

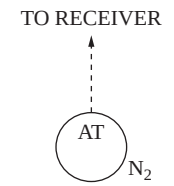

Flow Sheet Symbol

Nitrogen Analysis Method:

1. Ammonia: (1A) direct Nessler; (1B) direct phenate; (1C) distillation-titrimetric; (1D) distillation-Nessler; (1E) distillation-phenate; (1F) microcoulometric; (1G) gas chromatographic; (1H) ion-selective electrodes; (1I) hypochlorite-chemiluminescence
2. Nitrite: (2A) sulfanilic acid; (2B) m-phenylene diamine
3. Nitrate: (3A) phenoldisulfonic acid; (3B) ultraviolet (UV) absorption; (3C) brucine; (3D) reduction; (3E) specific ion-electrode; (3F) ion chromatography
4. Total nitrogen: (4A) Kjeldahl; (4B) combustion-chemiluminescence; (4C) gas chromatograph-chemiluminescence; (4D) combustion-electrochemical detector; (4E) combustion-thermal conductivity detector; (4F) persulfate digestion-colorimeter

Costs:

(1A, 1B, 2A, 2B, 3A, 4F) For an autoanalyzer with colorimetric detection, $35,000; specific-ion electrodes (1H, 3E) range between $350 and $700; (4B) $9,500 for a chemiluminescence detector module added to a TOC analyzer (see Section 8.60) for simultaneous TN and TOC measurements, $30,500 for a laboratory TN only analyzer, and $65,000 for an online TN analyzer; (4C) $20,000 for chemiluminescence detectors for gas chromatographs; (4E) $19,000 to $40,000 (depending on type of samples) for a TN analyzer based thermal conductivity detection

Partial List of Suppliers:

For gas chromatographs, see Section 8.12; for colorimeters, see Section 8.15; for ion-selective electrodes, see Section 8.28; and for UV analyzers, see Section 8.61.

Antek Instruments (www.antek.com) (4C); APS Technologies, Inc. (www.apstek.com) (4D); Bran and Luebbe, Inc. (www.branluebbe.com) (1H, 3B, 4F); Hach (www.hach.com) (1H); Ionics (www.ionics.com) (4C); Leco Corp. (www.leco.com) (4E); Shimadzu Corporation (www.shimadzu.com) (4B); Star Instruments (www.startoc.com) (4A); Tekmar-Dohrmann (www.tekmar.com) (4B); Zellweger Analytics (www.zelana.com) (1H)

INTRODUCTION

The measurement of nitrogen in its different forms (ammonia, nitrite, nitrate, total nitrogen) can involve in a variety of laboratory operations or utilize a variety of process analyzers. The analyzers that can be used in the industrial process environment include chromatographs, ion-selective electrodes, ultraviolet analyzers, and wet chemistry analyzers using colorimetric end-point sensors. Each of these types of analyzers has already been discussed in other sections of this chapter; therefore, in-depth coverage of these analyzers will not be repeated here.

ENVIRONMENTAL SIGNIFICANCE

Although the air is 79% nitrogen, the supply of nitrogen to plants and animals is limited by its availability in the usable chemical compounds. Atmospheric nitrogen is an inert gas that relatively few organisms can convert to usable forms such as ammonia, nitrate, and nitrite. Until the advent of large-scale industrial fixation processes for nitrogen, the major problem with nitrogen was its limited availability. The amount of nitrogen fertilizers produced since 1950 has increased many-fold, and it is estimated that production may exceed 100 million tons by the year 2000.

© 2003 by Béla Lipták

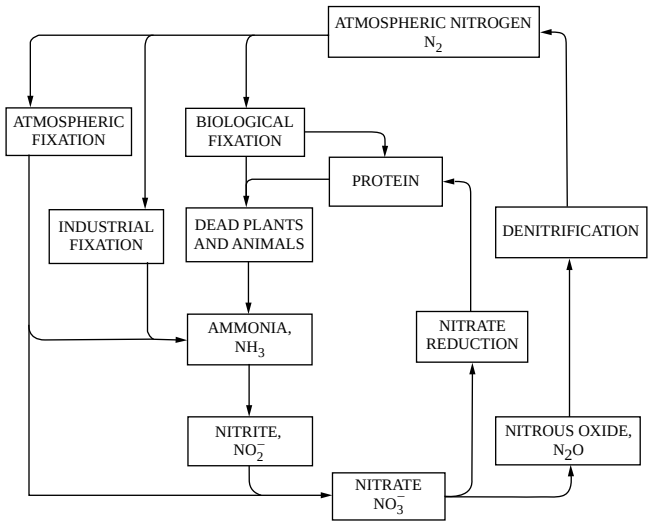

FIG. 8.36a
Nitrogen cycle.

Because not all of the nitrogen fertilizer is retained in the soil long enough for its intended use, several environmental problems have arisen in recent years. Nitrogen compounds in streams and lakes result in an increased growth of algae, which depletes the available oxygen for oxygen-dependent organisms. The rapid eutrophication of lakes is at least partly a result of excess nitrogen compounds in the runoff.

Nitrification and Denitrification

Another process, termed *nitrification*, in which ammonium ion is oxidized to nitrate or nitrite, can also create problems in the aquatic environment by depleting the available oxygen. Ammonium ion in normally alkaline waters is in equilibrium with free ammonia, which is toxic to fish and other aquatic forms. Microorganisms decompose organic nitrogen compounds by a process called *ammonification*, which converts organic nitrogen compounds such as amino acids to ammonium ions. The ammonium ions created add to the problems described.

Another process that is part of the nitrogen cycle, *denitrification*, converts the nitrates or nitrites produced by nitrification into inert molecular nitrogen. Figure 8.36a shows the nitrogen cycle. Nitrate concentration, if higher than 45 mg/l in drinking water, causes an illness in infants called *methemoglobinemia*. The problems caused by nitrogen compounds in water have made it necessary to analyze for nitrogen in its many forms or oxidation states. The oxidation states of nitrogen are listed in Table 8.36b.

AMMONIA NITROGEN[1,2]

The direct Nessler method is sensitive under optimal conditions to about 0.02 mg/l ammonia nitrogen. As a result of interferences such as hardness, iron, acetone, organic amines, and aldehydes, most water samples require a preliminary cleanup distillation. The Nessler reagent produces a yellow-to-brown color that can be compared visually to standards or can be read against a standard curve photometrically between the wavelengths of 400 and 500 nm (1 nm = 1 mμ = 10 A), depending on the photometer light pathlength chosen and on the concentration of the sample.

TABLE 8.36b
Oxidation States of Nitrogen

Oxidation State	*Name*	*Symbol*
+5	nitrate ion	NO_3^{1-}
+3	nitrite ion	NO_2^{1-}
0	nitrogen	N_2
−1	hydroxyl amine	NH_2OH
−3	ammonia	NH_3

The direct phenate method, which uses the reaction of ammonia, hypochlorite, and phenol catalyzed by manganous ion to produce an intense blue color (indophenol), is subject to interferences from acidity and alkalinity. The blue color has a maximum absorbance at the wavelength of about 630 nm. Because of interferences, cleanup distillation is desirable if subsequent determinations are to be made for other forms of nitrogen.

The average relative standard deviation for the sample concentration range of 0.2 to 1.5 mg/l ammonia nitrogen by the above methods has been reported as 20.3% for the direct Nessler and 27.0% for the direct phenate methods. After cleanup distillation, both methods have an average standard deviation of 13%. If the sample is distilled from a phosphate buffered at a pH of 7.4 into a standard boric or sulfuric acid absorbent solution, the excess acid can be titrated with a standard base to determine the ammonia nitrogen. The relative standard deviation for this method, however, averages about 40%.

For certain water samples, it may be useful to distinguish the *free* ammonia nitrogen, distilled from a neutral solution (pH 7.4), the *fixed* ammonia nitrogen, distilled from solution at pH 10.5 or greater, and the *albuminoid* nitrogen obtained by conversion with permanganate and alkaline distillation. Ammonia concentration can be rapidly determined by microcoulometry or by gas chromatography.

Ammonium and Total Nitrogen Probes

Probes are available to detect the ammonium ion concentration or total nitrogen (in the form of ammonium) in liquid streams. The probe measures the change in pH, which occurs in a thin film that is located between a permeable membrane and the pH glass electrode. The ammonia passes through the gas-permeable membrane in quantities proportional to its partial pressure (concentration) and causes a corresponding change in the film pH. Therefore, the measurement of pH

© 2003 by Béla Lipták

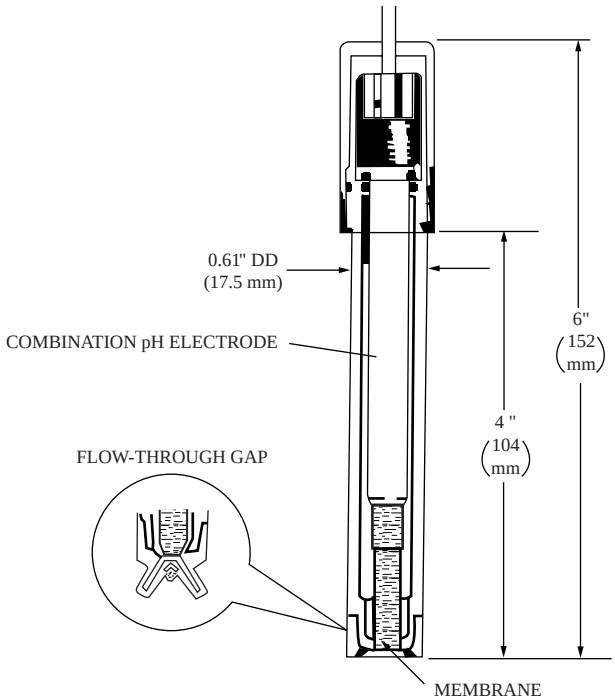

FIG. 8.36c
Probe for the direct determination of ammonia. (Courtesy of Ionics Business Group.)

reflects the concentration of ammonia. Figure 8.36c shows both the probe and the cap that can be added to its tip for use in continuous analysis in a closed-flow system.

Chemiluminescence

A more sensitive method involves the indirect detection of ammonia using chemiluminescence. Chemiluminescence is produced when a chemical reaction produces an electronic excited species. As the excited species returns to the ground state, light is emitted. As ammonia consumes the hypochlorite, the chemiluminescence signal of the luminol-hypochlorite complex decreases leading to negative peaks.[3] Another method involves the reaction of ammonia with hypochlorite, yielding a volatile compound that is combusted at 600°C. The NO produced reacts with ozone, and the resulting chemiluminescence is detected. The total time for the analysis is less than 3 min. Determination limit of as low as 1×10^{-8} M can be achieved using this method.[4]

NITRITE MEASUREMENT

Nitrite, an intermediate stage in the nitrogen cycle, can result from the decomposition of natural protein. Another source of nitrite ion in water is its use as a corrosion inhibitor.

Nitrite analyses by standard methods are based on the diazotization of sulfanilic acid with nitrite in strong acid followed by coupling with alpha naphthyl amine hydrochloride. The purple color formed can be read on a photometer at a wavelength of 520 nm or compared visually to standards. The best concentration range for the use of this method is below 2 mg/l, but higher concentrations can also be determined by appropriate dilution with distilled water.

An alternative method for the higher concentration ranges uses the yellow-brown color of the reactant of nitrite with metaphenylene diamine in acid solution. Both these methods are pH dependent but otherwise suffer few significant interferences except for chlorides when present in concentrations greater than 15,000 mg/l. Many diazotization reactions have been proposed and used to eliminate or minimize these interferences. A critical review by Sawicki[5] compares 52 methods for photometric nitrite analyses.

Another way of measuring nitrite involves its chemical reduction to NO by reducing agents such as NaI, V(III), Ti(III), Cr(III), and Mo(VI) + Fe(II).[4,6] The NO generated is detected using chemiluminescence.

NITRATE MEASUREMENT

Phenol disulfonic acid reacts with nitrate to produce a yellow color that can be measured at the maximum wavelength absorption between 410 to 480 nm, depending on sample concentration range and on colorimeter cell path length. Chlorides, even at 10 mg/l, represent a severe negative interference. Silver ion precipitation of chlorides has been used, but excess silver ion causes a brown precipitate, which interferes with the measurement. Nitrites at concentrations greater than 0.2 mg/l are a positive interference that can be removed with sodium azide.

The ultraviolet absorption at 220 nm wavelength can be used to measure nitrate. Chlorides represent no interference, but organic matter that absorbs at or near the same wavelength causes a positive variable interference. Hexavalent chromium and nitrite ions also interfere. Empirical correction for the normal interferences has been used successfully.

Nitrate can also be directly measured using ion-exchange chromatography.[7,8] Detection limits of 50 mg/L N have been reported.[7] This method allows for sequential analysis of different anions. However, anions that have the same retention time as nitrates will interfere. Furthermore, an excessive amount of chlorides (greater than 400 mg/l) results in decrease in signal for nitrates.[8]

In the brucine method, nitrate reacts with brucine sulfate in a glacial acetic and dilute sulfuric acid mixture. The rate and intensity of color change with time and with temperature so that simultaneous development of the color to its maximum is also necessary for the calibration standards. At concentrations below 1 mg/l, results have significant negative bias. Chlorides above about 1000 mg/l and nitrites both interfere with the measurement.

Nitrate has been analyzed by reduction to ammonia or nitrite,[9] which is then analyzed by one of the several methods

© 2003 by Béla Lipták

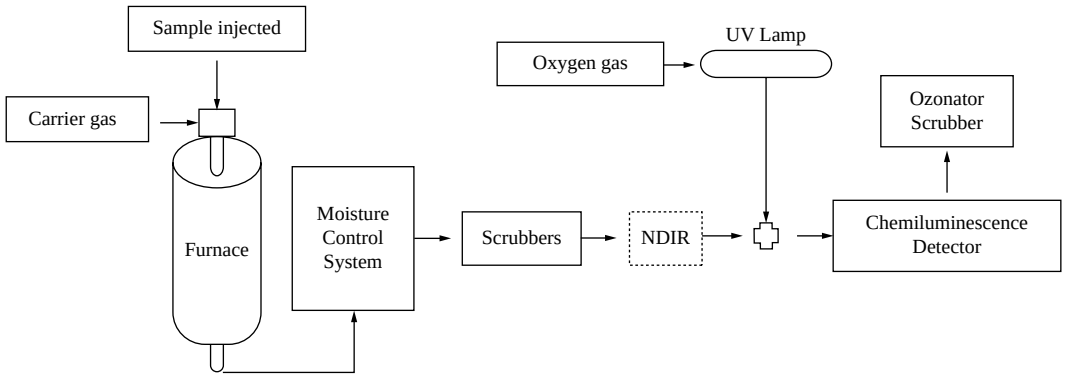

FIG. 8.36d
Chemiluminescence total nitrogen analyzer.

previously described. Several different metals and alloys have also been used to determine nitrate and nitrite, but ferric and fluoride ions interfere with the analysis. An infrared method has also been reported for determining both nitrate and nitrite simultaneously, but it requires extensive concentration and cleanup procedures.

A specific ion electrode for nitrate is available that is sensitive to less than 1 mg/l nitrate ion, but interferences due to the normal ranges of chloride and bicarbonate ion activities make the results far from acceptable. However, for water systems in which these interferences are absent, or for higher nitrate (>10 mg/l) concentrations, the electrode is rapid and convenient. The electrode's liquid ion exchanger deteriorates with time, causing a significant error if it is not recalibrated frequently and rejuvenated at least monthly. Although $C1^{1-}$ and HCO_3^{1-} ions can be removed by precipitation, the procedure is difficult and time consuming. Automated systems have been developed for the several reductions and determinative colorimetric reactions.

TOTAL NITROGEN

The increasing use of organic amines and other nitrogen compounds in manufacturing processes has led to increase in regulation in Europe for wastewater to be treated before being released in the environment. Standards such as ISO/TR 11905 Part 1 and 2, DIN 38 409, and DIN 38 406-E 5–1 include methods for the determination of nitrogen. The European Council requires that all wastewater treatment plants in major cities to measure total nitrogen (TN) by instrumental analysis.[10]

Kjeldahl Method

The total or Kjeldahl nitrogen standard method determines free ammonia and organically bound nitrogen in the –3 valence state but does not determine nitrites, azides, nitro, nitroso, oximes, or nitrates. Organic nitrogen is determined by subtracting the separately determined free ammonia nitrogen from the total nitrogen. The original analysis consists of several hours of digestion in boiling sulfuric aid, addition of toxic mercury compounds, then ammonia distillation and detection. The automated Kjeldahl has improved the inherent hazard of the test to the operator.

Chemiluminescence Analyzer

Figure 8.36d shows a flow diagram for a total nitrogen chemiluminescence analyzer. An aliquot of the sample is injected into a high-temperature furnace in an atmosphere of pure oxygen where nitrogen is converted to NO. The carrier gas transports the resulting steam and gases through the moisture control system. Inside the chemiluminescence detector, the NO formed reacts with ozone to produce an excited state of nitrogen dioxide (NO_2^*).

A photomultiplier tube adjacent to the reaction cell detects the photons (light) emitted as the NO_2^* returns to its ground state. The integrated signal is proportional to the amount of nitrogen in the sample. Concerns about recovery for different types of nitrogen species have been raised. Some manufacturers have employed more efficient catalysts, a NO_x converter, or swept the stream of gases through a reducing chamber containing a very strong reducing agent such as vanadium (III) chloride.[10] Simultaneous measurement of carbon (see Section 8.58) can be conducted by allowing the gas stream to pass through an NDIR detector before the CLD detector.

A typical range of measurement is 0.05 to 4,000 mg/l N. Speciation of the different nitrogen species can be accomplished by using a gas chromatograph with the chemiluminescence detector. For higher levels of TN measurements, such as 30 mg/l to % levels, the NO_x produced during combustion is converted to N_2, which is detected with a thermal conductivity detector.

The NO produced from the combustion of a nitrogen-containing sample can also be analyzed by reacting with an electrolyte in an electrochemical cell. This reaction produces a measurable current, which is directly proportional to the amount of nitrogen in the original sample. The analytical range of measurement is 0.1 to 1,000 mg N/l and precision

© 2003 by Béla Lipták

of 1 to 10% can be achieved, depending on the sample matrix.

References

1. ASTM, Standard Methods, American Society for Testing and Materials, Philadelphia, PA.
2. *Annual Book of ASTM Standards*, Part 23, American Society for Testing and Materials, D 992–71; D 1254067; D 1426–71.
3. Li, J. and Dasgupta, P.K., *Analytica Chimica Acta*, 398, 33–39, 1999.
4. Aoki, T., Fukuda, S., Hosoi, Y., and Mukai, H., *Analytica Chimica Acta*, 349, 11–16, 1997.
5. Sawicki, E., Stanley, T. W., Pfaff, J., and Amico, A. D., *Talanta*, 10, 641.
6. Yang, F., Troncy, E., Francoeur, M., Vinet, B., Vinay, P., Czaika, G., and Blaise, G., *Clinical Chem.*, 43, 657–662, 1997.
7. Davi, M. et al., *J. Chromatography*, 644, 345–348, 1993.
8. Bignami, S., *J. Chromatography*, 644, 341–344, 1993.
9. Fanning, J., *Coordination Chem. Rev.*, 199, 159–179, 2000.
10. Martin, J., Takahashi, Y., and Datta, M., *Am. Laboratory*, 49–53, February 1995.

Bibliography

Bruno, T. et al., *CRC Handbook of Basic Tables for Chemical Analysis*, CRC Press, Boca Raton, FL, 1989.

Cerda, A. et al., Sequential injection sandwich technique for the simultaneous determination of nitrate and nitrite, *Analytica Chimica Acta*, 371, 63–71, 1998.

Cho, S. et al., A fluorescent nitrate sensing system using a reaction cartridge and titanium trichloride, *Talanta*, 54, 903–911, 2001.

Ensafi, A. and Kazemzadeh, A., Simultaneous determination of nitrite and nitrate in various samples using flow injection with spectrophotometric detection, *Analytica Chimica Acta*, 382, 15–21, 1999.

Evans, R. and James, A., *Potentiometry and Ion-Selective Electrodes*, John Wiley & Sons, New York, 1987.

Ewing, G., *Analytical Instrumentation Handbook*, Marcel Dekker, New York, 1990.

Fresenius, W. et. al., *Water Analysis*, Springer-Verlag, Berlin/New York, 1988.

He, Z. et al., *Precise and Sensitive Determination of Nitrite by Coulometric Backtitration Under Flow Conditions, Fresenius J. Analytical Chem.*, 367, 264–269, 2000.

Kissinger, P. and Heineman, W., *Laboratory Techniques in Electroanalytical Chemistry*, Marcel Dekker, New York, 1984.

Libby, P. S. and Wheeler, P., Particulate and dissolved organic nitrogen in the central and eastern equatorial pacific, *Deep-Sea Research* I(44), 345–361, 1997.

Masserini, R. and Fanning, K., A sensor package for the simultaneous determination of nanomolar concentrations of nitrite, nitrate, and ammonia in seawater by flourescence detection, *Marine Chemistry*, 68, 323–333, 2000.

Miranda, K. et al., A Rapid, Simple spectrophotometric method for simultaneous detection of nitrate and nitrite, nitric oxide, *Biol. Chem.*, 5, 62–71, 2001.

Scully, F. et al., Disinfection interference in wastewaters by natural organic nitrogen compounds, *Environ. Sci. Technol.*, 30, 1465–1471, 1996.

Shugar, G. et al., *Chemical Technicians' Ready Reference Handbook*, McGraw-Hill, New York, 1990.

Skoog, D. A. and Leary, J. L., *Principles of Instrumental Analysis*, 4th ed., Saunders College Publishing, 1992.

© 2003 by Béla Lipták

8.37 Nitrogen Oxide Analyzers

R. J. GORDON (1974, 1982) **B. G. LIPTÁK** (1995, 2003)

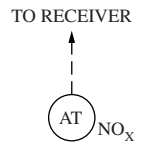

Flow Sheet Symbol

Analysis Methods:

A. Infrared
B. Ultraviolet
C. Chemiluminescent
D. Colorimetric
E. Electrochemical
F. Coulometric
G. Gas chromatography

Reference Method:

Colorimetric, applied to integrated samples collected in alkaline solution

Ranges:

A. 0–500 ppm to 0–10%
B. 0–100 ppm to 0–100%
C. 0–50 ppb to 0–10,000 ppm
D. Down to ppb
E. 0–500 ppm to 0–2500 ppm
G. Down to ppb

Inaccuracy:

Generally 1 to 2% of span, but some microprocessor-based electrochemical designs can be accurate within 2% of reading, and some chemiluminescent units are accurate within 0.5% of span.

Costs:

The installation and the upkeep costs are normally larger than the first costs of purchasing.
A. Single-beam portable or laboratory units, $4,000 to $5,000; an industrial NDIR, $8,000; a multi-gas analyzer pulling in up to five gases from 150 ft (50 m) distance, $25,000 to $27,000; FTIR, $75,000 to $125,000
B. Laboratory spectrophotometers, from $2500 to $5000; industrial units, about $20,000
C. About $10,000 to $20,000
D. About $50,000
E. Pocket-sized personal monitors begin at $750; remote sensor heads begin at $1500; on-site monitors with data loggers begin at $5000; stack gas analyzer with printer, auto calibration, and probe costs $6000 to $8000
G. Installed cost in the range of $50,000 to $100,000

Partial List of Suppliers:

Also refer to the Sections 8.4, 8.12, 8.15, 8.27, devoted to electrochemical analyzers, chromatographic analyzers, colorimetric analyzers, infrared analyzers, and ultraviolet analyzers.

ABB Process Analytics-Bomem (A) (www.abb.com\analytical)
Ametek (A) (www.westernreseach.com)
Anarad (A) (www.anarad.com)
Antek Instruments (C) (www.antek.com)
Bran and Luebbe, Inc. (B, D, G) (www.branluebbe.com)
Bruel & Kjaer (A) (kbinfo@spectristech.com)
CEA (A) (ceainstr@aol.com)
Cole-Parmer Instrument Co. (www.coleparmer.com)
Cosa Instrument Corp. (E) (www.cosa-instrument.com)
Foxboro (A) (www.foxboro.com)
Hamilton Sundstrand (AIT division, Analect) (A) (AIT@HS.utc.com)
Horbia Instruments (A, C) (www.horiba.com)

© 2003 by Béla Lipták

Ionics (C) (www.ionics.com)
Leco Corp. (F) (www.leco.com)
LI-Cor (A) (www.licor.com), Midac (A) (www.Midac.com)
MKS Instruments (A) (mks@mksinst.com)
MSA Instruments (A) (www.msanet.com)
Ocean Optics (A) (www.oceanoptics.com)
Remspec Corp. (A) (www.remspec.com)
Rosemont (A) (www.rauniloc.com)
Sensidyne (A, E) (www.sensidyne.com)
Servomex (A) (www.servomex.com)
Shimadzu Corporation (C) (www.shimadzu.com)
Siemens (A) (www.sea.siemens.com)
Sierra Monitor Inc. (www.sierrainstruments.com)
Teledyne (A) (www.teledyne-ai.com)
Wilks Enterprise (A) (www.WilksIR.com)
Zellweger Analytics (A, C) (www.zelana.com)

INTRODUCTION

The oxides of nitrogen are measured both in ambient air and in the gases emitted by industry. While the types of analyzers used for these two applications do overlap, here, an attempt will be made to separate them. Therefore, in this section the devices more often used for industrial emission monitoring will be discussed first. These include infrared, ultraviolet, chemiluminescent, gas chromatographic, and electrochemical devices. Colorimetric and coulometric analysis is more often used for ambient air analysis and will be discussed later in this section.

INDUSTRIAL EMISSION MONITORING

Paramagnetic Analyzers

Nitrogen oxide is attracted by the magnetic field and therefore is detectable by a paramagnetic analyzer. This instrument is described in this chapter under Oxygen Analyzers (Section 8.42) and is not widely used for the measurement of nitrogen oxide concentration.

Thermal Conductivity Analyzers

The thermal conductivity (see Section 8.57) of nitric oxide (NO) is slightly less than that of air—about 90%. Therefore, although thermal conductivity measurements have been attempted for NO analysis, it is neither a sensitive nor a selective means of measurement.

Nondispersive Infrared Analyzers

Nondispersive infrared (NDIR) analyzers are suitable for the determination of nitric oxide (NO) concentration. These devices are most often used in stack gas analyzer packages, which, in addition to NOx, also detect the concentrations of carbon dioxide, carbon monoxide, sulfur dioxide, and opacity. Section 8.27 described the nondispersive infrared analyzers, and Figures 8.27h and 8.27t show some of their stack-mounted variations.

Ultraviolet Analyzers

The absorbance of nitrogen dioxide in the ultraviolet range is shown in Figure 8.37a. Because, in most combustion processes, there is an interest in determining the concentrations of the both NOx and SO_2, some of the suppliers of ultraviolet analyzers have combined the two tasks into a single analyzer whereby their concentrations are simultaneously measured (Figure 8.37b). Because nitric oxide (NO) is essentially transparent in the visible and ultraviolet regions, it must be converted to NO_2 before it can be measured.

In Figure 8.37b, this conversion is achieved by contacting the sample gas with oxygen pressurized to five atmospheres. Once the NO is converted, the total NO_2 concentration is measured as NOx. Ranges can be as narrow as 0 to 100 ppm or as wide as 0 to 100% NOx, and the measurement error is about 2% of full scale.

Chemiluminescent Analyzers

Another method of nitrogen oxides[1] determination makes use of the fact that nitric oxide (NO) reacts with ozone to form nitrogen dioxide (NO_2), and this reaction is accompanied with the release of light (chemiluminescence).

$$NO + O_3 \rightarrow NO_2 + hv \text{ (light } 0.6 - 3\mu) \qquad \textbf{8.37(1)}$$

If excess ozone is present, the light emission is proportional to the amount of nitric oxide present in the sample. Instruments that operate on the basis of this principle are commercially available.

For the determination of NO_2 (which reacts with ozone rather slowly), some analyzers are provided with a catalytic converter to first reduce NO_2 to NO and then determine the sum of NO_2 and NO directly. The apparatus is schematically shown in Figure 8.37c.

Electrochemical Sensors

Portable or permanently installed probe-type electrochemical sensors are available for NO, NO_2, and NOx measurement

© 2003 by Béla Lipták

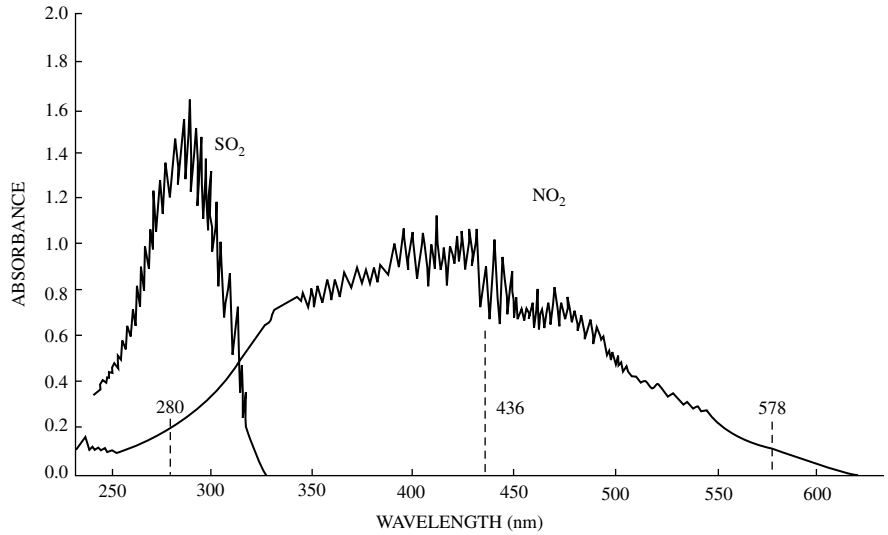

FIG. 8.37a
The absorbance of SO_2 and NO_2 in the ultraviolet range.

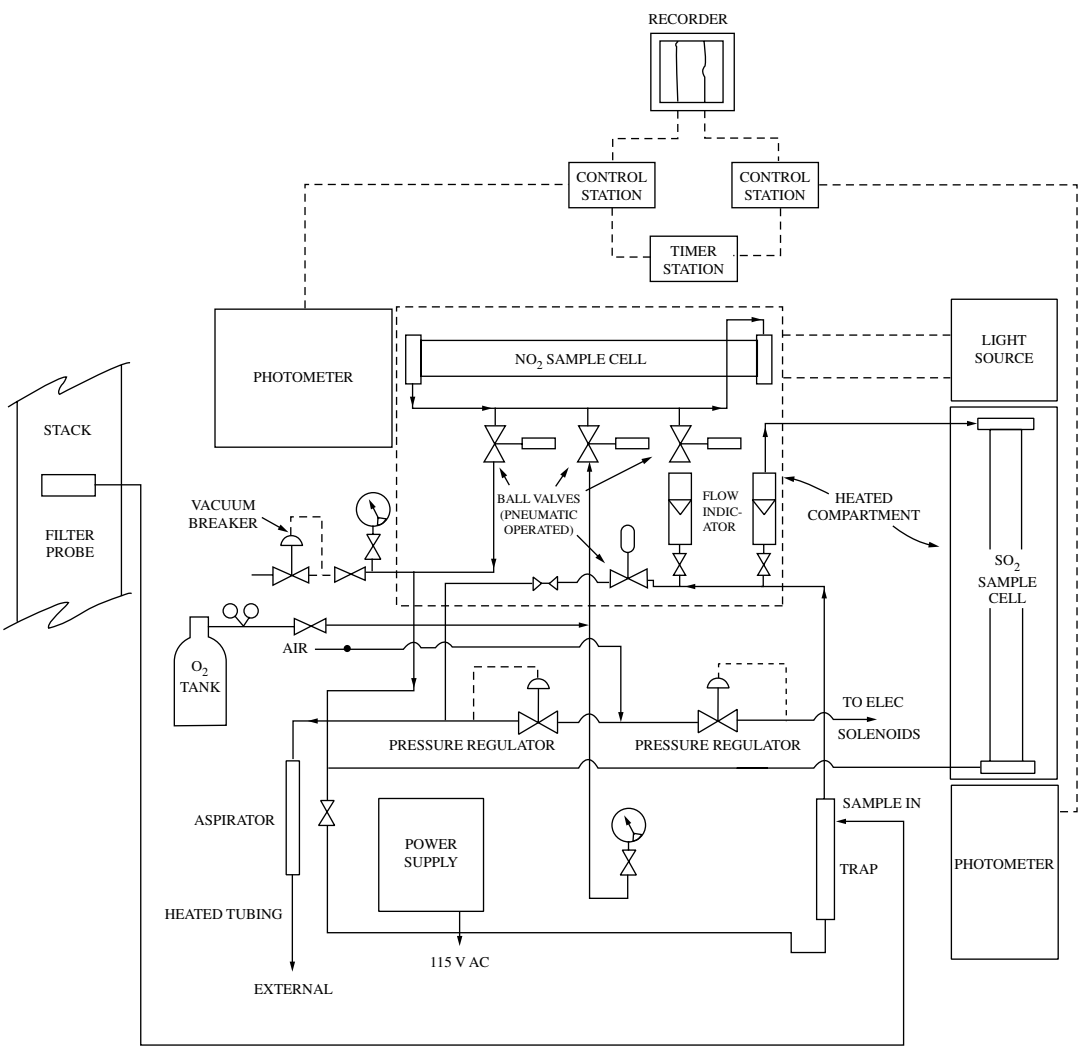

FIG. 8.37b
Ultraviolet analyzer used for the simultaneous measurement of NO_x and SO_2.

© 2003 by Béla Lipták

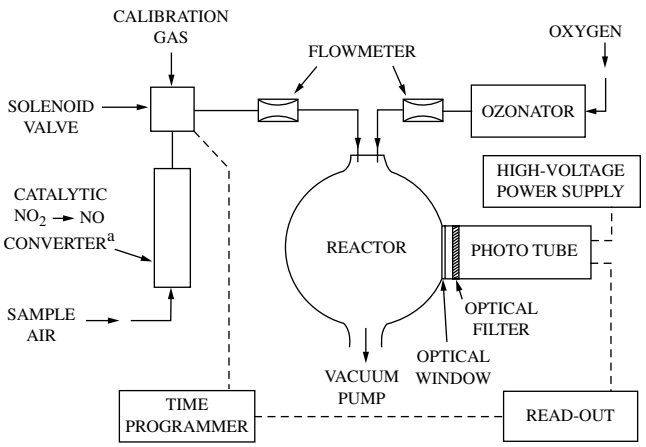

[a] CONVERTER CAN BE OMITTED IF ONLY NO IS MEASURED

FIG. 8.37c
Chemiluminescence nitric oxide analyzer.

in stacks. These units are microprocessor based, are available with 4 to 20 mA transmitter outputs, and include self-diagnostic and self-calibration features. The probe can be exposed to continuous temperatures of 1550°F (850°C), which for short periods can rise to 2200°F (1200°C).

Gas Chromatography

There have been a limited number of reports of applications for analysis of oxides of nitrogen by gas chromatography. Such chromatographic columns are fairly short and are provided with electron capture detectors. These are the same types of chromatographs that are used for the analysis of peroxyacyl nitrates. For added details on gas chromatography, see Section 8.12.

AMBIENT AIR MONITORING

Calibration Methods

The reliability of dynamic calibration of gas analyzers is always superior to that of static calibration, but it is also much more difficult. This is because, in high concentrations, nitric oxide (NO) is rapidly oxidized to nitrogen dioxide (NO_2) by air, and NO_2 condenses and dimerizes at high concentrations. For these reasons, dynamic calibration for NO and NO_2 requires great care. In colorimetric or coulometric analysis, the NO in fact is not measured directly at all but is measured only after its oxidation to NO_2, so these analyzers are calibrated only for NO_2.

Dynamic Calibration Dynamic calibration for NO_2 requires preparation of a sample of inert gas containing a known concentration of NO_2. This sample may be obtained by gas-dilution techniques (with special precautions in handling NO_2), gravimetrically, electrolytically, or by use of a permeation tube. The permeation tube (as used with hydrocarbons) is described in Section 8.25. However, NO_2 permeation tubes are moisture sensitive. Therefore, during storage, these tubes should be protected from moisture, and only dry gases should be used for dilution. If these precautions are observed, the permeation tube is probably the most convenient method for the dynamic calibration of NO_2.

Static Calibration Static calibration is carried out with standard solutions of nitrite. Because this procedure does not detect the components of the gas in the sampling line, it is not as complete a test as is the dynamic calibration, but it is much simpler. The stoichiometric ratio of nitrite to NO_2 under controlled conditions is usually a constant value.

In the Griess–Saltzman method, the consensus (although there has been controversy) is that 0.72 mole of nitrite gives the color of 1 mole of NO_2. Using the Jocobs–Hochheiser method, this factor has been found to be 0.63.

NO–NO_2 Combination Analysis

In continuous analysis, it is customary to determine both NO and NO_2 as NO_2 (Table 8.37d). The NO is oxidized to NO_2 by means of potassium permanganate or dichromate or by chromium trioxide, in various formulations. The efficiencies of conversion seem to depend on the length of service and, for the chromium oxidizers, they also depend on humidity.

TABLE 8.37d
Nitrogen Oxide Analyzers

General Method	*Type*	*Advantages*	*Disadvantages*
Colorimetric	Griess–Saltzman	Precise, thoroughly tested, widely used, continuous analysis	Short life of collected sample, sensitive reagents, NO oxidation required.
	Jacobs–Hochheiser	Precise, stable after collection	Not adapted to continuous analysis, sensitive reagents, NO oxidation required.
Coulometric		Simple apparatus, continuous analysis	Sensitive to other oxidants, NO oxidation required.
Chemiluminescent		Dry gases only, sensitive photometry, continuous analysis	Requires ozone generator NO_2 catalytic reduction.
Gas chromatography		Specific, frequent analysis	Not a developed instrument, expensive and complex.
Electrochemical		Simple apparatus, continuous analysis	Sensitivity not high, NO oxidation required.

© 2003 by Béla Lipták

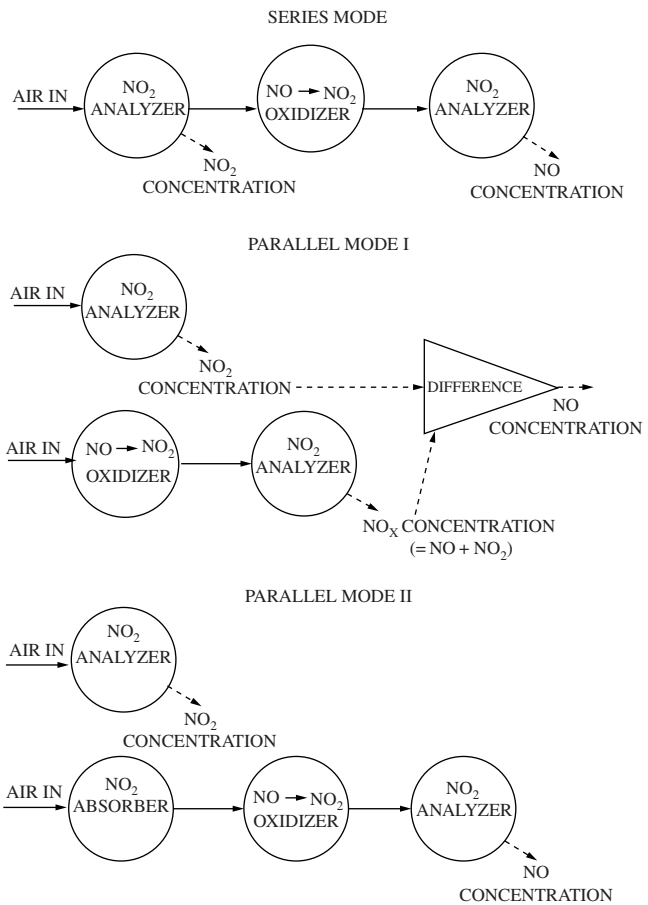

FIG. 8.37e
Nitrogen oxides analyzer modes.

Aqueous permanganate seems to be the best choice, even though it may not be completely efficient (hence, NO may be underestimated).

Series Analysis In series analysis for NO and NO_2 (Figure 8.37e), the air passes through an NO_2 analyzer for measurement and removal of NO_2, then through an oxidizer to convert NO to NO_2, and finally through a second NO_2 analyzer. The second analyzer gives a measure of NO concentration. In one type of parallel analysis, two equal air streams are analyzed for NO_2, one of them after passage through an oxidizer. The latter gives total oxides of nitrogen (NO + NO_2) from which NO is found by difference from the other parallel analyzer. In a second type of parallel analysis, one stream is analyzed directly for NO_2, and the second is scrubbed free of NO_2 by passage through ascarite, followed by oxidation of NO to NO_2 and NO_2 analysis.

Colorimetric Determination

There are two important colorimetric methods[2] for NO_2 determination. They are the Griess–Saltzman and the Jacobs–Hochheiser methods.

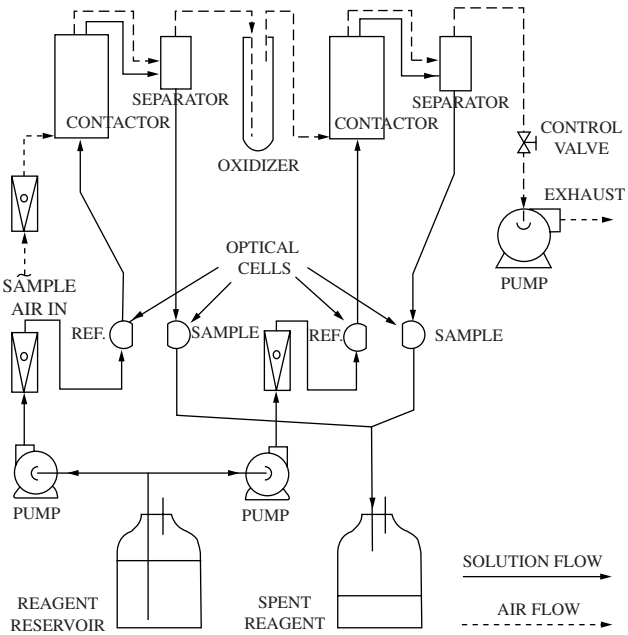

FIG. 8.37f
Colorimetric nitrogen oxides analyzer.

The Griess–Saltzman Method The Griess–Saltzman method is used in most continuous colorimetric NO_2 analyzers. It is based on the reaction of NO_2 with sulfanilic acid to form a diazonium salt that couples with N-(1-napthy1)-ethylenediamine dihydrochloride to form a deeply colored azo dye. Air is passed into the reagent solution for not over 30 min. After that, time is allowed for development, and the color is measured at 550 nm.

The measurable range of concentrations is from 0.02 to 0.75 ppm. In manual use, the color is developed for 15 min and should be read within 1 hr (on a colorimeter or spectrophotometer). In a continuous analyzer (Figure 8.37f), the gas and liquid flow rates are adjusted for optimal response, and the developed color is potentiometrically read in a flow cell using a 550 nm filter. Response times are usually 5 to 15 min.

The Jacobs–Hochheiser Method The Jacobs–Hochheiser method is the standard reference method used for U.S. National Air Quality Standards. The reason for this is that the standards are based on the annual average, and this method allows collection of up to 24-hr integrated samples and delays in analysis of at least 2 weeks. In contrast, with the Griess–Saltzman method, samples must be quickly analyzed.

In the Jacobs–Hochheiser method, the air is passed through aqueous sodium hydroxide so that the NO_2 is concerted to nitrite ion. Sulfur dioxide is removed from the solution by treatment with hydrogen peroxide and is acidified. The rest of the procedure is the same as for the Griess–Saltzman method except that sulfanilamide is used instead of sulfanilic acid. Efficiencies found with this procedure in the U.S. National Air Surveillance Network are approximately 35%.

© 2003 by Béla Lipták

TABLE 8.37g
*Typical Range, Sensitivity, and Alarm Setpoints of Portable Personal Protection Monitors**

Gas	*Range*	*Resolution*	*Alarm Set Points (low/high)*
O_2	0–30%	0.1%	19.5/23.5%
CO	0–500 ppm	1 ppm	35/200 ppm
H_2S	0–100 ppm	1 ppm	10/20 ppm
SO_2	0–20 ppm	1 ppm	2/10 ppm
NO	0–250 ppm	1 ppm	25/50 ppm
NO_2	0–20 ppm	0.1 ppm	1/10 ppm
NH_3	0–50 ppm	1 ppm	25/50 ppm
PH_3	0–5 ppm	0.1 ppm	1/2 ppm
Cl_2	0–10 ppm	0.1 ppm	0.5/5 ppm
HCN	0–100 ppm	1 ppm	4.7/50 ppm

* Abstracted from Cole-Parmer Catalog 2001/2002, Vernon Hills, IL, 2001.

Portable Monitors

For purposes of personal protection, battery-operated portable units are available. These units are usually provided with one or two alarm set-points and with memory for some thousands of data points along with their times and dates. Table 8.37g lists the ranges, resolutions, and alarm set points for a number of gases including NO and NO_2.

These pocket-sized, battery-operated, portable electrochemical detectors are usually provided with digital displays and audible alarms. They can be configured for one or more monitoring channels.

CONCLUSIONS

The most widely used conventional method of ambient air analysis is colorimetric. It is most often based on the use of the Griess–Saltzman reagent (a diazotization method). This is a fairly precise and dependable method but requires a great deal of attention.

The colorimetric method is specific for nitrogen dioxide. To analyze for nitric oxide, an oxidation step is required. Of various oxidizer columns, the most commonly used is the permanganate one, but none is completely satisfactory. It is important to calibrate it over a range of nitric oxide concentrations and at various humidity levels.

The chemiluminescent method utilizes the reaction between ozone and nitric oxide. This is a dry gas method requiring an ozone generator and compressed gas. In the chemiluminescent method, a catalytic reduction of nitrogen dioxide to nitric oxide is required.

For industrial applications, the most often used analyzers are the nondispersive infrared, ultraviolet, and electrochemical types. The chemiluminescent and gas chromatographic techniques are less frequently used.

References

1. Fontijn, A., Sabadell, A. J., and Ronco, R. J., *Analytical Chem.,* 42.
2. *Air Quality for Nitrogen Oxides,* U.S. Environmental Protection Agency, Air Pollution Control Office Publication No. AP-84, Chap. 5.

Bibliography

Dailey, W. V., A novel NDIR analyzer for NO, SO_2 and CO Analysis, *Analysis Instrum.,* 15, 1977.
Ewing, G., *Analytical Instrumentation Handbook,* Marcel Dekker, New York, 1990.
Hommel, C. O. and Sekhar, N., Parameter monitoring for SO_2 and NOx emissions, 1992 ISA Conference, Houston, October 1992.
Landa, I., Visible (VIS) near infrared (NIR) rapid spectrometer for laboratory and on-line analysis of chemical and physical properties, *SPIE,* 665, 286–289, 1986.
Lodge, J. P., *Methods of Air Sampling and Analysis,* 3rd ed., Lewis Publishers, Chelsea, Michigan, 1988.
MacRae, M., Analyzing new options, *Pharm. Tech.,* 26(2), 2002.
Schirmer, R. E., On-line fiber-optic-based near infrared absorption spectrophotometry for process control, *Proc. ISA,* 1229–1235, 1986.
Scully, F. et al., Disinfection interference in wastewaters by natural organic nitrogen compounds, *Environ. Sci. Technol.,* 30, 1465–1471, 1996.
Shugar, G. et al., *Chemical Technicians' Ready Reference Handbook,* McGraw-Hill, New York, 1990.
Skoog, D. A. and Leary, J. L., *Principles of Instrumental Analysis,* 4th ed., Saunders College Publishing, 1992.
Stoeppelwerth, P. B., Utility boiler control system upgrade, 1992 ISA Conference, Houston, October 1992.
Turner, G. S., Design and Performance of an Ambient Level $NO/NO_2/NO_x$ Monitor, *Analysis Instrum.,* 12, 1974.
Van Agthoven, M. A., Mullins, O. C., et. al, Near Infrared Spectral Analysis of Gas Mixtures, *Appl. Spectroscopy,* 56, 2002.
Weiss, M. D., Analyzing stack emissions, *Control,* July 1990.

© 2003 by Béla Lipták

8.38 Odor Detection

A. TURK (1974, 1982) **B. G. LIPTÁK** (1995) **W. P. DURDEN** (2003)

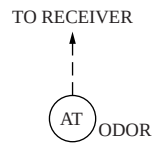

Flow Sheet Symbol

Methods of Detection:

A. Organoleptic
B. Instruments, such as chromatographic, mass spectrographic, thermal conductivity, catalytic combustion, semiconductor, flame ionization, photoionization.
C. Electronic nose

Sensitivity of Detection:

A. About 0.2 ppb
B. About 10 to 200 ppb
C. ppt to ppb, depending on chemical

Costs:

Chromatograph (See Section 8.12 for details), about $100,000 installed with accessories; portable chromatograph with electrochemical sensor, $15,000; mass spectrograph, about $100,000; photoionization, portable, $3,400 to $6,800; solid state gas hydrocarbon portable, about $1200; polymer, MOV, fiber optic, calorimetric, amperometric, gravimetric, $700 to $100,000

Partial List of Suppliers:

Agilent Technologies (www.agilent.com)
Alpha Mos (www.alpha-mos.com)
Baseline–MOCON Inc. (www.baselineindustries.com)
Bloodhound Sensors Ltd. (www.leeds.ac.uk/ulis/Bloodhound/)
Brechbüehler AG (www.brechbuehler.ch/)
Cyrano Sciences Inc. (www.cyranosciences.com)
E2V Technologies (www.e2vtechnologies.com)
EEV Chemical Sensor Systems (www.eevinc.com)
Electronic Sensor Technology (www.estcal.com)
Environics Industry; Gastech Co. LTD. (www.portadetector.com)
Gow-Mac Instrument Co. (www.gow-mac.com)
GSG Analytical Instruments (www.gsganalytical.com)
Honeywell (www.honeywell.com)
HNU Technology (www.hnu.com)
HNU Systems UK Ltd. (www.hnu.co.uk)
Lennartz Electronics (www.lennartz-electronic.de)
Mastiff Electronics (www.mastiff.co.uk)
Mitsubishi Electric (www.mitsubishielectric.com)
Motech (www.motechind.com)
MSA Instrument Div. (www.msanet.com)
Nordic Sensors (www.nordicsensors.com)
Osmetech plc (www.osmetech.plc.uk)
Perkin-Elmer Corp. (www.perkin-elmer.com)
Phoenix Electrode Co. (www.phoenixelectrode.com)
Schott Company (www.schott.com)
LDZ Laboratoire Dr. Zesiger (www.smartnose.com)
Thermo Finnigan Austin (www.tmqaustin.com)

© 2003 by Béla Lipták

INTRODUCTION

Odor is a sensation associated with smell, which can be hard to quantify. The same quantities of different materials cause different odor intensities. The unit of odor intensity is based on the odor of tertiary butyl mercaptan (TBM; W = 1.0). Using that reference, H_2S, for example, has an odor intensity of 0.08 or 8% of TBMs. Most odorant substances contain sulfur. Table 8.38a lists a number of odorant substances and their relative odor intensities (W).

THE MEASUREMENT OF ODOR

This section compares organoleptic and chemical/instrumental methods for odor measurement. The organoleptic methods, which utilize the human olfactory system, are completely subjective. However, techniques are available that can convert subjective measurements into useful objective results.

Recent improvements in technology and increased research in the area of instrumentation have made dramatic improvements in the creation of instruments that are capable of surpassing the human olfactory system. In fact, the instruments of today are approaching the sensitivity of the canine olfactory system, which is thought to be as much as a million times more sensitive than that of humans. These developments have overcome the two major shortcomings generally suffered by chemical/instrumental methods: sensitivity and flexibility.

Sensitivity

The human olfactory system is generally three orders of magnitude more sensitive than currently available chemical/instrumental methods. Humans can detect and identify odors present in quantities to which commercially available instrumentation and chemical methods are completely insensitive.

Flexibility

The human olfactory system is capable of detecting and identifying a wide variety of chemical structures and giving different responses to different materials. Commercially available instrumentation and chemical methods are generally restricted to particular chemical structures and give a similar response to all compounds with that structure.

The Gas Chromatograph

The most successful instrumental method for the measurement of odor has been the gas chromatograph. Gas chromatographs, which monitor the Kraft paper mills and use flame photometric detectors, can determine the concentrations of sulfur dioxide, hydrogen sulfide, and other odorous gases down to about 0.01 ppm.[2] Success in detecting these sulfur-containing compounds using a coulometric cell with platinum electrodes has also been reported.[3] Levels as low as 0.1 ppm were detected by this method.

The threshold levels detected by the human nose[4] are as low as 0.00021 ppm (trimethylamine). Thus, it was apparent that, except for special situations, the human nose, with its attendant sociological, psychological, and physiological complications, was the only odor sensor available for general odor measurement.

However, the detection of odor using chemical or chromatographic methods for determining measurable levels of individual chemicals in a vapor phase is not really odor detection but gas or chemical detection. The detected chemical(s) have an odor and, based on experience, the output of the chromatograph can be interpreted into an odor associated with, for example, the smell of a peach.

True odor analysis will not only determine that the odor is a peach, but whether it is a green, ripe, or rotten peach. Today's instruments can now determine the *quality* of the odor in near real time. These odor detectors and analyzers are trained to recognize the odors and the levels of distinction by

TABLE 8.38a
The Relative Odor Intensity of Different Chemicals[1]

Odor Intensity Abbreviation	*Name*	*Formula*	*(W)*
EM	Ethyl mercaptan ethanethiol	CH_3H	1.08
DMS	Dimethyl sulfide methylsulfide	$(CH_3)_2S$	1.0
IPM	Iso propyl mercaptan 20-propanethiol	$CH_3CHSHCH_3$	0.88
MES	Methyl ethyl sulfide methyl thioethane	$(CH_3)_2CH_2S$	0.66
NPM	Normal propyl mercaptan 1-propanethiol	$(CH_3)CH_2CH_2SH$	0.85
TBM	Tertiary butyl mercaptan 2-methyl 2-propanethiol	$(CH_3)_3CSH$	1.00 (ref)
SBM	Secondary butyl mercaptan 1-methyl 1-propanethiol	$(CH_3)_2CH_2CHSH$	1.99
DES	Diethyl sulfide ethyl sulfide	$(C_2H_5)_2S$	0.22
Thiophane	Thiophane tetrahydrothiophene	C_4H_8S	1.63
EIS	Ethyl isopropyl sulfide		0.07

© 2003 by Béla Lipták

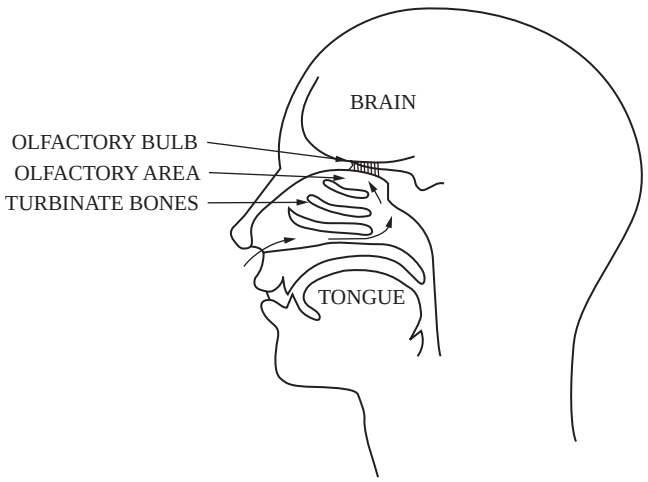

FIG. 8.38b
The human olfactory system.

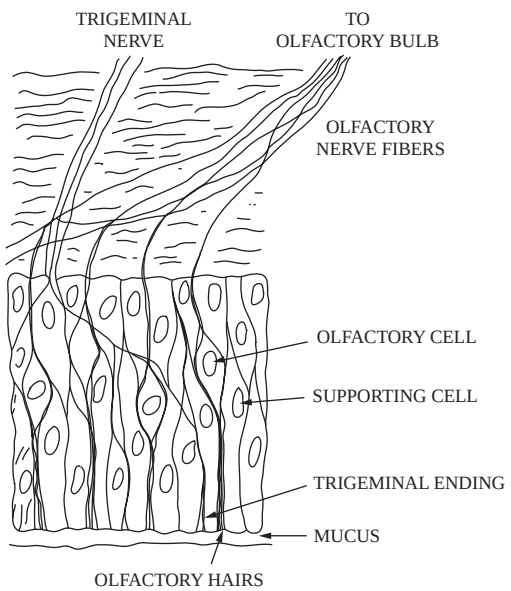

FIG. 8.38c
Section of an olfactory epithelium.

exposure to standards of odor. Once trained, these devices will provide a proportional reading of the odor, much the same as a human olfactory system but without the subjectivity.

THE HUMAN OLFACTORY SYSTEM

The human olfactory system actually involves more than the nose. As a stream of air is drawn in through the nostrils, it is warmed and filtered by passing over the three baffle-shaped turbinate bones in the upper part of the nose (Figure 8.38b). Some of the air swirls past the olfactory receptors located high up in the nasal passages just below the brain.

These odor receptors consist of hairlike filaments attached to the end of the fibers of the olfactory nerve and the trigeminal nerve endings (Figure 8.38c). Upon being stimulated by odorous materials, these receptors send signals to the olfactory bulb, where they are relayed to higher centers of the brain. In these higher centers, the signals are integrated and interpreted in terms of the character and intensity of the odor.

Sample Preparation

Because of the extreme sensitivity of the human nose, the concentrations of odorants in air can be extremely low yet can produce a strong response. These low concentrations present a problem with regard to the manner by which samples are presented to the human sensor. Improper handling of an ambient air sample or improper preparation of an odorant standard can result in erroneous results because of adsorption of the odorants on the walls, incomplete mixing of an odorant with dilution air, or impure dilution air.

Errors can also result from the type of system used to bring the sample in contact with the olfactory sensors. The use of syringes or other means by which the nose is not immersed in the sample yield lower apparent odor intensities than do methods whereby the nose is fully exposed to the sample.[5]

The use of an odor room can also yield misleading results because of natural odors generated by the body and adsorption by clothing. The best approach appears to be the *sniff box* shown in Figure 8.38d. In this case, the human sensor is kept in an air-conditioned room into which charcoal-filtered air is blown to maintain a slight positive pressure. This prevents the sample in the sniff box and other contaminated air from entering the room. For measurement, the whole face is placed in the sample stream within the sniff box.

ODOR PANELS

The use of humans as measurement instruments introduces a variability that is difficult to control. This variability is due to the moods, biases, and other vagaries associated with the human sensor. Each human being is a unique creation, with differences in intelligence, persistence, sensitivity, experience,

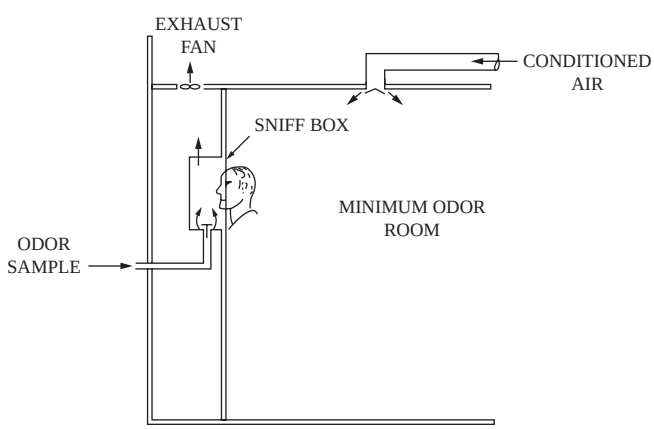

FIG. 8.38d
Diagram of sniff odor test system.

© 2003 by Béla Lipták

and interests. These differences make the response of an individual an unreliable indicator in itself. The use of a panel of individuals for the measurement of odor levels statistically eliminates the unreliability of the individual.

An odor panel generally consists of 5 to 10 people. The people who compose the odor panel need not have unusual olfactory abilities. However, they should be able to distinguish among odors of different intensities, discriminate among different odor qualities, and communicate the perceived sensations in terms of reference standards. They should also be emotionally receptive to making quantitative and discriminatory judgments without expressing their preference.

Training of an Odor Panel

The primary tasks of an odor panel are the following:

1. Judge the relative intensity of an odor at different dilutions.
2. Discriminate among the different odor qualities.
3. Combine the intensity and quality of an odor to give a composite profile that can be communicated to the scientist in charge of the test.

The panelists are expected to follow instructions and also to render independent judgment reflecting their own sensations.

Tests In addition to exposing the panelists to various levels of odors similar to those to be measured, three tests can be used for training purposes. These are the triangle test, the intensity rating test, and the multicomponent identification test. In the triangle test, three samples are presented to the panelist at the same time. Two are identical, and the third is different in either intensity or quality. The panelist must select the odd sample.

The intensity rating test consists of a series of perhaps 20 dilutions of an odorant in an odorless medium. One sample is removed from the series, and the panelist is asked to determine the sample's proper place in the series according to its odor intensity.

The last test is the multicomponent odor identification test, in which three mixtures are presented to the panelist. These mixtures contain, in sequence, two, three, and four odors out of a possible total of eight known standards. The panelist is told how many components to look for and is asked to identify each of them.

This group of three tests develops a panelists' ability to distinguish between different odor intensities, discriminate among odor qualities, and communicate their sensations in terms of predetermined standards. After the group has some experience working together under a competent test director in actual measurement situations, highly accurate measurements of odor levels can be made.

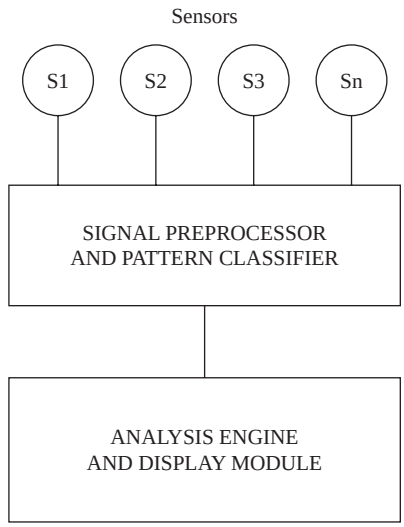

FIG. 8.38e
Typical schematic of an electronic nose.

THE ELECTRONIC NOSE

Advances in technology have led to significant improvements, both in analysis and in size, in the electronic nose. The basic technology relies on the use of solid state sensors—either chemoresitors, chemodiodes, or electrodes. All electronic noses use the same basic method of sensing and analysis (Figure 8.38e).

Primary odors are composed of polar molecules, organic vapors, and phthalocyanines. New sensors such as the chemosensors are devices that convert chemical composition into a quantifiable electrical format. Other new types include conductometric, optical, gravimetric, amperometric, calorimetric, potentiometric, and chemocapacitor sensors.

Polymeric Film Sensors

Conductometric sensors are made up of conductive polymers and metal oxide semiconductors. The first are composed of a polymeric film composite. This technology was developed concurrently in the U.S. and the U.K. The work in the U.S. occurred at the California Institute of Technology in a joint effort with Jet Propulsion Laboratory (JPL). The developments in the U.K. occurred at the University of Manchester Institute of Science and Technology.

In both cases, the developed sensors consist of an array of pairs of electrical contacts that are electrically connected by a composite film. The composite film is composed of a special nonconductive polymer, which is mixed with carbon black in a homogeneous blend. This forms a conductive bridge between the electrical contacts.

The composite film is selected to absorb specific vapor analytes. As it does so, it swells, thereby increasing the distance between the carbon black particles. This first changes its resistance characteristics and then breaks the electrically conductive path in the film. The variance in the resistance

© 2003 by Béla Lipták

between the electrical contacts is used as the output of the sensor. Because of the selected polymer, each sensor in the array is sensitive to a different level of concentration of a chemical. This allows relative concentrations to be determined.

Metal Oxide Sensors

The second type of sensor, metal oxide, employs a similar method of odor detection but uses metal oxide sensors in an array, reacting to the chemicals, changing the semiconductors' conductance, and producing the reading. The use of metal oxide sensors falls into two categories, thin and thick film. The thin film targets NO_x, H_2, and NH_3. The thick film is used for the detection of odors of alcohols, ketones, and combustible materials.

Other Sensors

Potentiometric sensors, using MOSFET semiconductors, react to the chemicals in an odor, which change the resistance of the sensor to generate the reading. Chemocapacitors perform the same function by reacting to the chemicals in the odor by generating a change in the sensor capacitance.

Gravimetric sensors use gas chromatography (GC) coupled with surface acoustic wave (SAW) and quartz crystal microbalance (QCM) measurements. The GC separates the gas and deposits the chemical compound on a vibrating quartz crystal. This causes a change in the acoustic or sound propagation characteristics as a result of the mass change caused by the chemical absorbed. Response time is approximately ten seconds.

Amperometric sensors use the catalytic oxidation of a chemical analyte to generate heat proportional to the amount of chemical present.

Optical sensors use specially coated optical fibers. The coating consists of specifically formulated fluorescent dyes with unique characteristics that cause the fibers to react to very specific chemicals, changing the optical characteristics in proportion to the amount of chemical present.

Calorimetric sensors are thermal sensors that measure the heat generated by the absorption of an analyte into the sensor coating. The more chemical present, the greater the heat generated.

Training

All electronic noses must be trained to recognize the odors as specific smells. Known samples are used to generate defined patterns, odor fingerprints, or (as they have been called) *smell prints*. These standards are used to define the parameters by which the training occurs. A major challenge is to interpret the odor signals into a specific reading of a specific odor with no false readings. The intelligence in the analyzer must emulate the human equivalent of subjective comparison. This is done through prediction algorithms and sophisticated pattern analysis such as multivariate, fuzzy logic, genetic algorithms, cluster analysis, discriminate function analysis, and adaptive models.

Applications

This technology allows the analyzers to be small—at least desktop size and, in some cases, easily handheld. There are indications that credit card size devices will eventually be developed. A sensor can be designed to be as specific or as broad in application as desired. There are many possible applications in industrial and commercial safety, drug interdiction and enforcement, explosive detection, pharmaceuticals, medical, food and beverage, perfumes, breweries, wineries, etc.

Anywhere an odor can be used to detect the presence or even absence of a substance, these electronic noses can be used. The cycle time is typically a few seconds but can be longer, depending on the chemical and the vapor state. Temperature dramatically affects the vaporization of most chemicals, thereby reducing the amount of chemicals to cause an odor. When a sensor/analyzer is used for batch applications, there is an additional time required to purge and clear the sensor array, allowing it to return to a baseline state.

One manufacturer has recently introduced a sensor and analyzer to detect the odor of hydrocarbons in water.

References

1. Kutzleb, R. E., Odotron: a better way to measure gas odorants, *Pipe Line Ind.*, May 1973.
2. Stevens, R. K., O'Keefe, A. E., Mulick, J. D., and Krost, K. J., Gas Chromatography of Reactive Sulfur Gases in Air at the Parts Per Billion Level, 1, *Direct Chromatographic Analysis*, National Air Pollution Control Administration, Cincinnati, OH.
3. Applebury, T. E. and Schaur, M. J., *Analysis of Kraft Pulp Mill Gases by Process Gas Chromatography*, Department of Chemical Engineering, Montana State University, Bozeman, MT.
4. Leonardos, G., The profile approach to odor measurement, *Proc. Mid-Atlantic States Section, Air Pollution Control Association Semiannual Technical Conference on Odors: Their Detection, Measurement and Control*, Rutgers University, New Brunswick, NJ.
5. Reckner, L. R. and Squires, R. E., *Diesel Exhaust Odor Measurement Using Human Panels*, SAE Paper 680444.
6. Defranco, L., The nose knows: Cyrano Sciences' electronic nose, The Scientist web site, www.the-scientist.com/yr1999/july/tools1_990705.html.
7. Staples, E. J., Real time characterization of food & beverages using an electronic nose with 500 orthogonal sensors and VaporPrint imaging, Sensors Expo Convention, Lake Tahoe, May 2000.
8. NOSE web site, www.nose-network.org.

Bibliography

Altpeter, T., *Portable Natural Gas Odorant Analyzed*, Gas Research Institute publication, undated.

Amoore, J. E., Johnston, J. W., Jr., and Rubin, M., The stereochemical theory of odor, *Sci. Am.*, 210(2), 42.

Gardner, J. W., and Bartlett, P. N., *Electronic Noses*, OUP Press, Oxford, 1999.

© 2003 by Béla Lipták

Lee, C., Odor control plan for hyperion treatment, ISA/93 Technical Conference, Chicago, September 19–24, 1993.

Novak, J., *Quantitative Analysis of Gas Chromatography,* Marcel Dekker, New York, 1989.

Pearce, T. C., Schiffman, S. S., Nagle, H. T., and Gardner, J. W., Eds., *Handbook of Machine Olfaction,* Vch Verlagsgesellschaft Mbh, 2003.

Rafson, H. J., Ed., *Odor and VOC Control Handbook,* McGraw-Hill, New York, 1999.

Reid, R. et al., *Properties of Gases and Liquids,* McGraw-Hill, New York, 1987.

Shugar, G. and Dean, J., *The Chemist's Ready Reference Handbook,* McGraw-Hill, New York, 1990.

Sullivan, R. J., *Preliminary Air Pollution Survey of Odorous Compounds,* a literature review prepared under contract no. PH 22–68–25, National Air Pollution Control Administration Publication No. APTD 69–42.

Waarvick, C., Automatic odor control systems, *InTech,* August 1993.

© 2003 by Béla Lipták

8.39 Oil in or on Water

C. P. BLAKELEY (1974, 1982) **B. G. LIPTÁK** (1995) **I. VERHAPPEN** (2003)

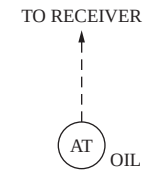

Flow Sheet Symbol

Types of Designs:
A. Reflected light oil slick detector (on-off)
B. Capacitance: available in probe form for interface detection or in a flow-through design or in a floating plate configuration for measuring the thickness of oil
C. Ultraviolet (UV)
D. Microwave (radio frequency): available as an interface probe, as a tape-operated tank profiler, or as an oil in water content detector
E. Conductivity probes for interface detection
F. Nuclear for interface detection

Range:
A. Generally from 0–50 ppm to 0–100%
B. Flow-through dual-concentric detector from 5 to 15% water in oil
C. 0–10 ppm to 0–150 ppm oil in water
D. Oil content detectable from 0 to 100%

Inaccuracy:
A. Generally from 1 to 5% of full scale
B. The flow-through dual-concentric detector has a sensitivity of about 0.05 to 0.1% water
C. 0.1 ppm for a 0 to 10 ppm range
D. Interface is detected to 5%; tank profile, to 1% or 3 cm, and water concentration, to 0.1%

Costs:
For capacitance, conductivity, and ultrasonic level probes, see Section 3.3, 3.4, and 3.20; for conductivity analyzers, see Section 8.17.
C. $12,000 to $20,000 for dual-wavelength unit with auto-zero and 0–10 ppm to 0–150 ppm range

Partial List of Suppliers:
For capacitance, conductivity, and ultrasonic level probe suppliers, see Sections 3.3, 3.4, and 3.20; for conductivity analyzer suppliers, see section 8.17.

Agar Corp. (D) (www.agarcorp.com)
Bailey Controls Div. (www.abb.com)
Caldon (D) (www.caldon.net)
Delta C Technologies (B) (www.delta-c.com)
Endress+Hauser Instruments (B) (www.endress.com)
Invensys (Foxboro Co.) (B) (www.invensys.com)
FMC Invalco (C) (www.fmcinvalco.com)
Ohmart/Vega (F) (www.ohmart.com)
Phase Dynamics (D) (www.phasedynamics.com)
SeCap (C) (www.sentech.no)
Synetix (F) (www.synetic.com)
Teledyne Analytical Instruments (C) (www.teledyne-ai.com)

INTRODUCTION

The measurement of oil in or on water is an important requirement in both industrial and environmental pollution protection related applications. Both applications are discussed in this section, starting with the industrial process applications.

PROCESS INDUSTRY MEASUREMENTS

The most common applications of these sensors are for interface measurements between the layers of oil and water in tanks and pipelines. Conductivity, capacitance, and ultrasonic level probes (Sections 3.3, 3.4, 3.20) and probe or flow-through

© 2003 by Béla Lipták

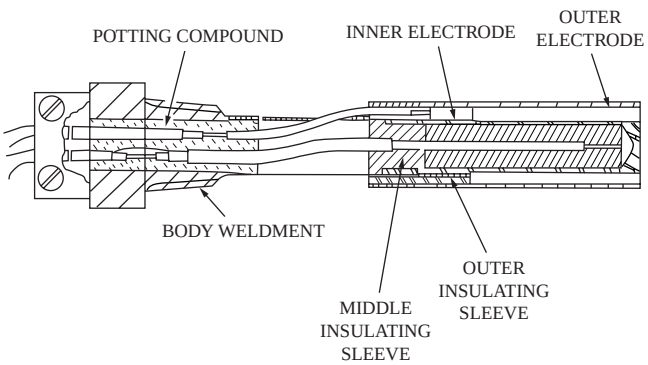

FIG. 8.39a
Dual-concentric capacitance probe for the detection of water in oil.

conductivity analyzers (Section 8.17) are widely used for detecting such interfaces. To avoid redundancy, these devices will not be discussed in this section, but other capacitance and radio-frequency (microwave) types will be covered in the paragraphs that follow.

In other applications, it is desirable to detect the amount of oil that is dispersed in a water stream. Ultraviolet analyzers are well suited for the measurement of oil in water and are discussed in Section 8.61. When the dispersed oil content increases, float- and displacement-type level sensors (Sections 3.7 and 3.8) and density detectors (Chapter 6) can also be considered. A radio-frequency (RF) type oil concentration detector will also be described below.

Capacitance-Type Water-in-Oil Detectors

The capacitance of water is much higher (its dielectric constant is about 80) than that of oil (about 2), so measuring the dielectric constant is a convenient way to tell them apart. In addition to conventional capacitance probes, special dual-concentric designs (Figure 8.39a) are also available to detect the interface between water and oil in tanks. In addition, flow-through sensors are also available for in-pipeline applications.

The flow-through version of the dual-concentric electrode design is illustrated in Figure 8.39b. Here, the electrodes consist of two concentric pipes that are insulated from each other, thereby forming the capacitor through which the process stream flows. The flanged spool piece is available in sizes from 2 to 8 in. (50 to 200 mm) and is designed for operation up to 150 PSIG (10.6 bar) and 212°F (100°C). The unit is available with switching or transmitting (4 to 20 mA) electronics.

The water-in-oil sensor is most often applied for the purpose of setting the maximum amount of water that is allowed to be present in the oil. When that concentration is reached, the flow is diverted or other corrective action is taken.

Radio-Frequency (Microwave) Sensors

When a cup containing water and oil is placed in a microwave oven, the water will heat up, but the oil will not. This is because shortwave RF energy is absorbed much more efficiently by water than by oil.

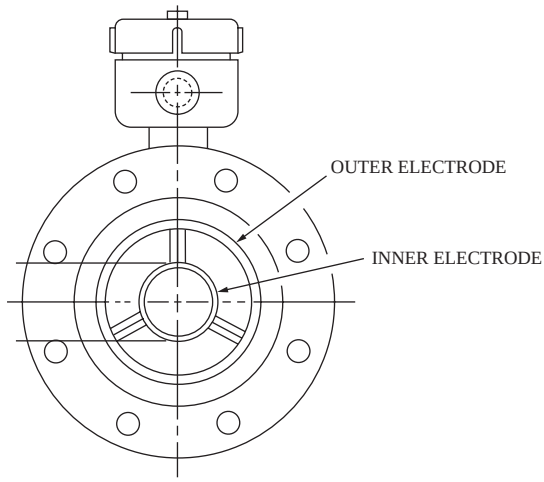

FIG. 8.39b
Flow-through water-in-oil detector utilizing two concentric capacitance electrodes. (Courtesy of Endress+Hauser.)

In a radio-wave detector, the transmitter produces waves that are of fixed frequency and contain a constant amount of energy. The more of this energy that is absorbed by the process fluid (the more water is in the mixture), the lower will be the voltage at the detector. The advantages of this design (relative to capacitance systems) include wider range (0 to 100%), lower sensitivity to buildup, insensitivity to temperature and salinity variations, and suitability for higher-temperature operations (up to 450°F, or 232°C).

Rag Layer and Tank Profiler Sensors The radio-wave oil-in-water sensors are available as probe-type sensors for water–oil interface control. A typical application is free water knockout (Figure 8.39c), in which the probe is installed horizontally at an elevation of one-third of the diameter from the bottom and is set to open the water dump valve when the emulsion concentration drops below 20% oil (80% water). This way, the emulsion (rag layer) will build up above the probe. These instruments can also provide a 4 to 20 mA transmitted output signal and can detect water concentration within an error of about 5%.

A portable tank profiler is also available that uses the same principle of operation. Here, the tape-supported radio-wave element is gradually lowered into a tank, which can be up to 100 ft (30 m) tall. As the sensor is lowered, it measures both the location of the interface (within an error of 0.12 in., or 3 mm) and the emulsion concentration throughout the tank height (from 0 to 100% within an error of 1%) (Figure 8.39d).

Water-in-Oil Probes A water-in-oil monitoring probe is also available that can detect the water concentration over a range of 0 to 100% in tanks or pipelines (Figure 8.39e) within an error of 0.1%. All of these devices are available in explosion-proof construction and can be provided with digital displays.

© 2003 by Béla Lipták

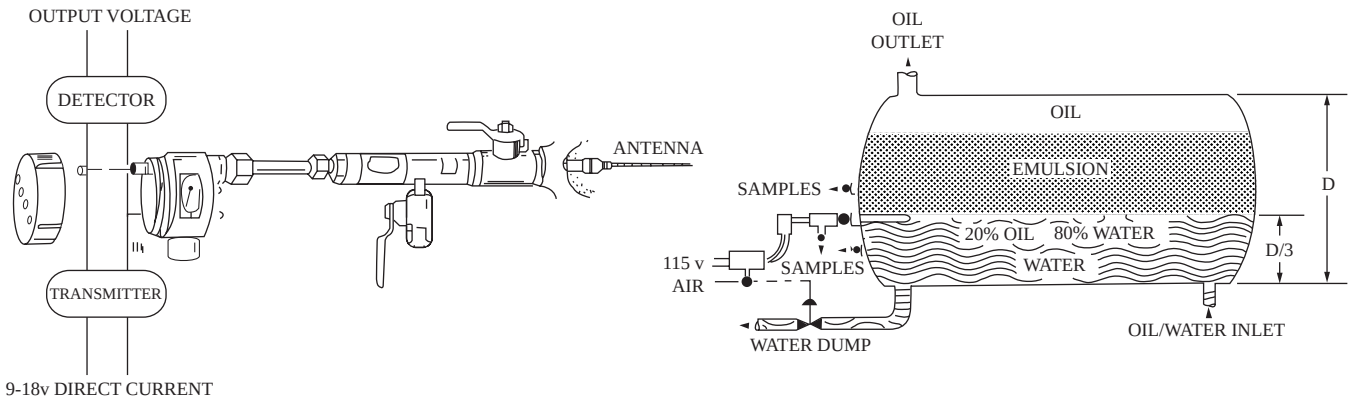

FIG. 8.39c
Radio-wave oil–water interface detector probe. (Courtesy of Agar Corp.)

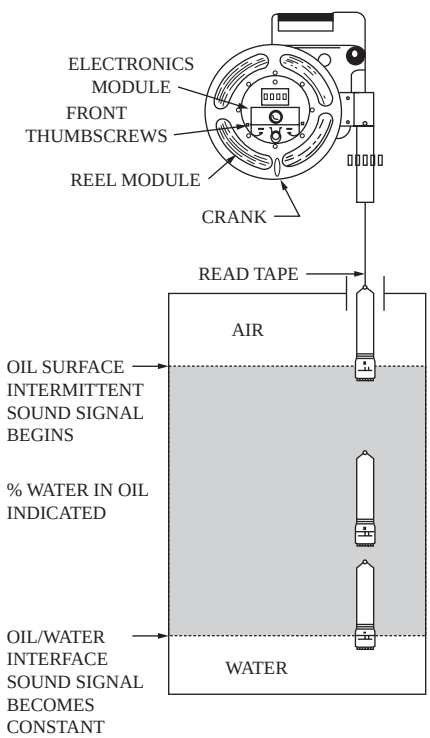

FIG. 8.39d
Tape-type tank profiler using radio-wave oil–water sensor. (Courtesy of Agar Corp.)

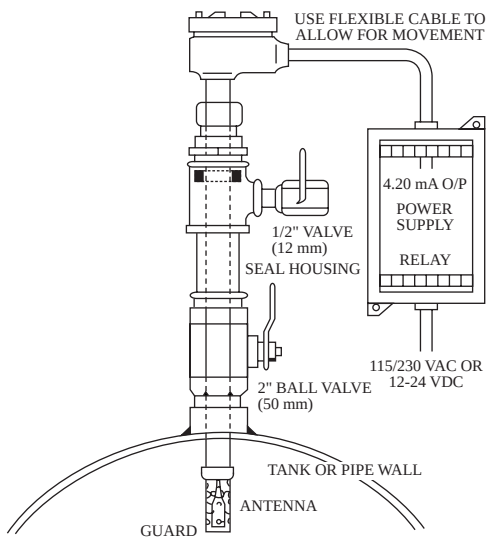

FIG. 8.39e
Water-in-oil concentration can be detected within a 0.1% error. (Courtesy of Agar Corp.)

When applying this technology to measure oil in water, one must remember that there is a crossover point, at around 80% water concentration, at which the solution changes from being *water continuous* to *oil continuous*. This crossover results in a discontinuity in the analyzer output. Therefore, these devices suffer a significant loss in accuracy around this measurement point. In addition, many of these sensors are also sensitive to the salinity of the water phase. This can be corrected through the use of strapping tables, which should be selected by the user during calibration.

Conductivity and Capacitance Sensors

There is a substantial difference between the conductivities of water and hydrocarbons. This difference is often used as the basis for detecting the interface between these two fluids.

Vessel profiles can also be estimated by using an array of self-contained capacitance cells on a common mounting frame. If the appropriate software is available, the resultant capacitance profile of the vessel can be used to signal the multiple interfaces in that vessel to a resolution as good as 1 cm.

Ultrasonic Sensors

As was illustrated in Figure 6.7b, a flow-through ultrasonic densitometer is available for mounting between a pair of pipe flanges. It measures and transmits an analog signal

© 2003 by Béla Lipták

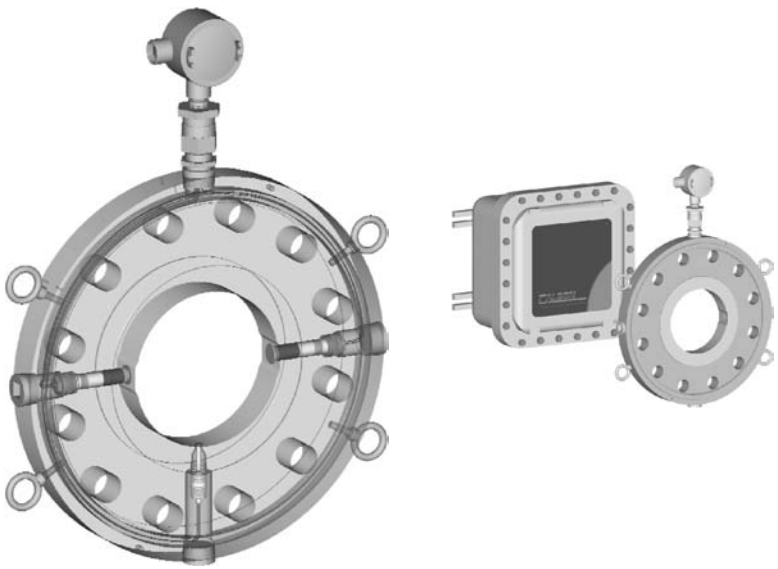

FIG. 8.39f
Wafer-type ultrasonic pipeline interface detector. (Courtesy of Caldon, Inc.)

proportional to the density and, hence, the amount of hydrocarbon in the flowing stream.

By using a number of pipeline interface detectors (Figure 8.39f), it is possible to use this meter to estimate fluid viscosity, thus making it useful as an interface detector between batches of product in a pipeline. The time of passage of the ultrasonic pulse and the attenuation of the signal are used to calculate both the density and the viscosity of the flowing fluid.

The viscosity is calculated from the slight rarefaction and compaction of molecules in the liquid, which cause viscous shearing of the fluid that absorbs acoustic energy. Kinematic fluid viscosity is determined from the energy loss of the meters' acoustic pulses as they pass through the fluid.

The analog outputs, which correspond to relative density and kinematic viscosity, can be used to detect the passing of an interface between two liquids in a pipeline. This information can be used to properly divert the flow into the correct tank. Relative density is determined by the change in sound velocity as a function of density and, because the object of the measurement is to compare the density of water against that of oil, an estimate of water or oil content can be made.

Nuclear Sensors

Several companies use the attenuation of gamma radiation to measure the density of the fluid between a source and detector, thus allowing a complete vessel profile and hence an estimation of the *composition* inside. One manufacturer of this technology uses an array of fixed sources and detectors, and others use a matched source and detector moving up and down in a well to provide a density profile (Figures 8.39g and 8.39h).

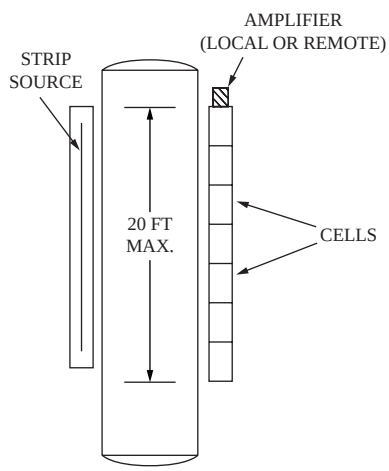

FIG. 8.39g
Strip source and cell receivers can be used for tank profiling.

As was the case for the conductivity array, software is then used to determine the actual interfaces between the phases. This interface is normally at the inflection point between two layers of differing densities.

Ultraviolet Oil-in-Water Analyzer

Figure 8.39i illustrates the sampling system of a continuous oil-in-water analyzer used for the monitoring of steam condensate, recycled cooling water, and refinery or offshore drilling effluents.

The UV analyzer used in this system is a single-beam, dual-wavelength analyzer. This is superior to the single-wavelength designs, because it is able to compensate for variations in sample sediment content, turbidity, and algae concentration, and for window coatings. The cell operates

© 2003 by Béla Lipták

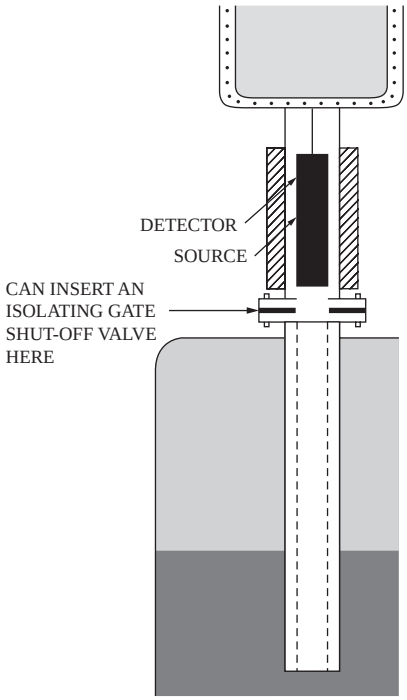

FIG. 8.39h
Backscatter-type traversing detector can detect interface levels while also drawing a specific gravity profile for the tank. (Courtesy of Ohmart Corp.)

according to Beer's law [Equation 8.27(1)], which relates oil concentrations to UV energy absorption by the fixed length cell. The UV measuring band is centered at 254 nm, and the readings are sensitive to 0.1 ppm with a range of 0 to 10 ppm and provide a 90% response in 1 sec.

The instrument is automatically zeroed by the sample water being sent to both the measurement and the zeroing sides of the conditioning system. When in the measurement mode, the sample is sent through a high-speed, high-shear homogenizer, which disperses all suspended oil droplets and the oil, which is adsorbed onto foreign matter so that the sample sent to the analyzer becomes a uniform and true solution.

Once per hour, the analyzer is automatically rezeroed. In this mode, the sample water is sent through a filter that removes all the oil, and, after sparging, it is sent to the analyzer. This oil-free zero-reference sample still contains all the other compounds as contained in the measurement. Therefore, it can be used to zero out this background.

ENVIRONMENTAL POLLUTION SENSORS

Oil floating on water forms a mechanical barrier between the air and the water. It prevents oxygenation and kills oxygen-producing vegetation on the banks of streams. By coating the gills of fish, these materials also prevent breathing and cause the fish to suffocate. Outfalls from ships and municipal or industrial waste treatment plants must therefore be monitored for oil, and oil must be removed to prevent oil-bearing wastes from entering the receiving waters.

Continuous monitors are available to detect any hydrocarbons that are floating on the surface of the water. Oil in the water is equally undesirable, because it contributes to the biochemical oxygen demand (BOD) and can also be toxic to aquatic biota, to the fish food in water, and possibly to the fish themselves.

Optical methods of detection, when used for both types of contamination, require regular, conscientious maintenance for continuous and reliable performance. The capacitance approach used for the monitoring of oil film thickness on the water appears to require less maintenance but is limited to detection of floating oil. Each application must be evaluated separately, because presently available sensors have limited capabilities.

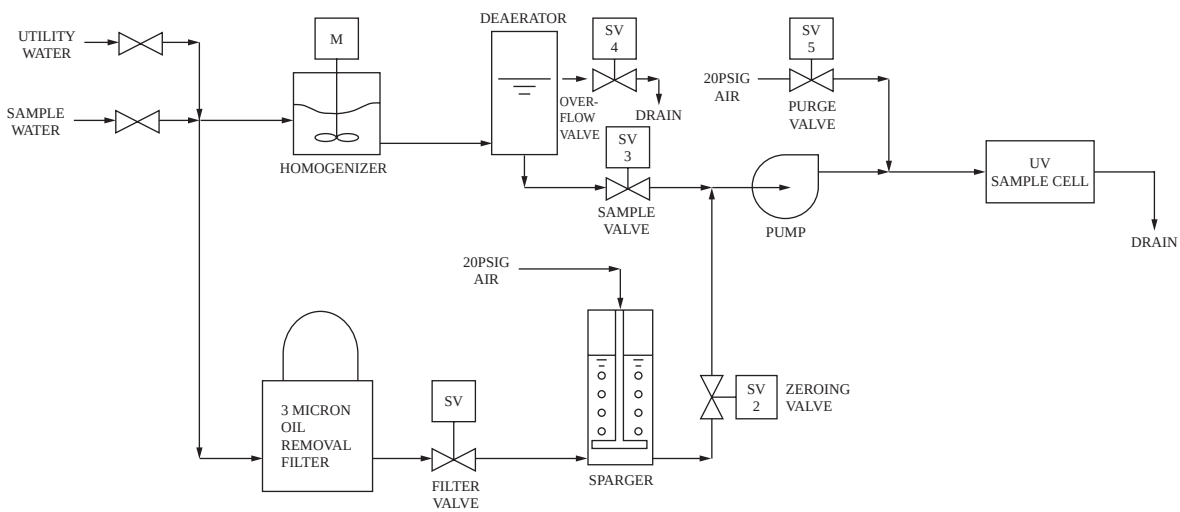

FIG. 8.39i
Ultraviolet oil-in-water analyzer with automatic-zero feature. (Courtesy of Teledyne Analytical Instruments.)

© 2003 by Béla Lipták

On-Off Oil-on-Water Detector

The nephelometer is intended to detect visible oil (hydrocarbon) slicks that are floating on fresh or salt water. It consists of two parts: a sensing head and a controller. The sensing head is inside an explosion-proof housing, which is supported on pontoons or floats in the body of water. An S-shaped baffle directs the flowing water past the sensing head.

A beam of light is focused through a lens onto the surface of the water. A second lens refocuses the reflected light onto a photocell. When there is no oil on the water, only a minimum amount of reflection occurs. When floating oil is present, the reflected light intensity increases substantially.

The measurement is based on the differential between the outputs of the reflected light photocell and a reference photocell, which is measuring the output of the light source itself. This instrument can provide an output signal that is proportional to the intensity of the reflected light, and it can also perform alarm functions.

Care must be taken when using such reflected light measurements to block out sunlight and/or other stray light sources because, if they are allowed to be also reflected, they will introduce an error (typically on the high side).

Continuous Oil-on-Water Detector Sensors similar to that deployed in the on-off detectors are also available to estimate the amount of oil floating on the water. The difference between the two applications is that, in this case, the Lambert–Beer law [Equation 8.27(1)] is used to determine the concentration from the detected light intensity.

Oil-Thickness-on-Water Detector

The previously described devices detect the presence or absence of oil floating on the water. This device permits the measurement of the thickness of the oil layer. The detector consists of a floating sensing head that is connected by a shielded cable to a remote controller. The sensor measures the thickness of the oil layer on the water by capacitance measurement (Figure 8.39j).

The operating principle is that of a series capacitor. The formula given is in Equation 8.39(1).

$$\frac{1}{C} = \frac{t}{\varepsilon A} = \frac{t_{oil}}{\varepsilon_{oil} A} + \frac{t_{water}}{\varepsilon_{water} A} \qquad \textbf{8.39(1)}$$

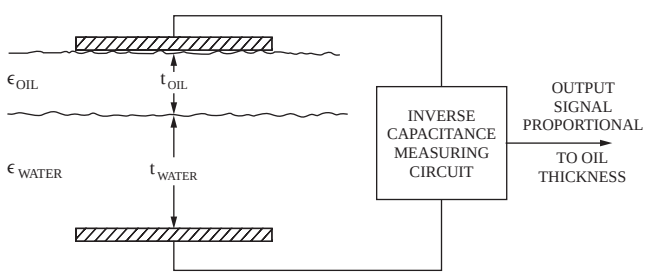

FIG. 8.39j
Parallel-plate capacitor detecting the thickness of an oil layer on water.

where

A = effective area of one capacitor plate
t = thickness
ε = dielectric constant

Because ε_{oil} = 1.9 to 2.1, whereas ε_{water} = 80, Equation 8.39(1) can be simplified by eliminating the second term, as shown in Equation 8.39(2).

$$\frac{1}{C} = \frac{t_{oil}}{\varepsilon_{oil} A} \qquad \textbf{8.39(2)}$$

Thus, the inverse of capacitance is detected as a value that is proportional to the oil thickness. The circuit generates a DC signal in proportion to the inverse of capacitance and is used for remote transmission. The sensor takes advantage of the large differential in dielectric constants between oil and water. It is claimed that it is not confused by the presence of emulsified sludge (having a large dielectric constant) or by oily froth, which cannot pass under the float.

Oil-in-Water Detector

When UV radiation is sent through an oil-contaminated water sample stream at a peak intensity of 365 nm, visible radiation is emitted. The intensity of this radiation can be measured by a photocell. The intensity of this radiation increases as the concentration of the fluorescent substance rises. At low concentrations (below 15×10^{-6}), the relationship between concentration and the visible radiation is essentially linear. In higher concentrations, some nonlinearity is experienced as a result of a saturation effect.

The most common configuration is to pass the process sample through the sensing head in an upflow direction (Figure 8.39k). The head is equipped with two windows that are set at right angles to each other so as to minimize the intensity of direct radiation from the source striking the photocell and also to reduce the effect of multiple scattering of the visible radiation. Optical filters at the incident and at the

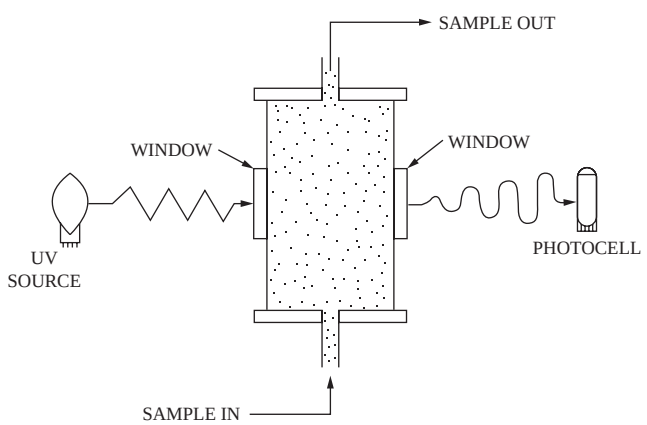

FIG. 8.39k
Oil-in-water detector.

© 2003 by Béla Lipták

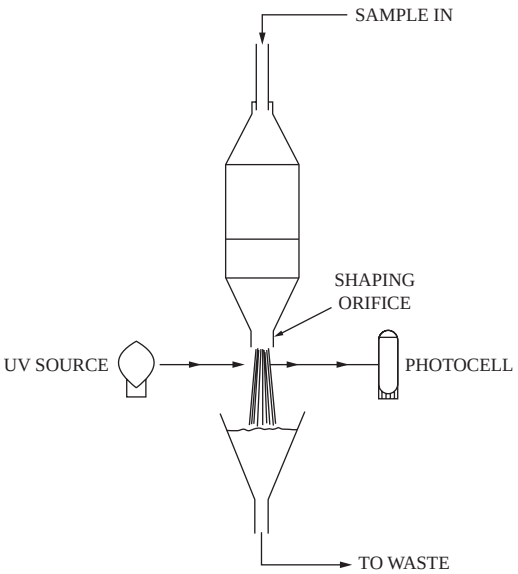

FIG 8.39l
Falling-stream oil-in-water detector.

emergent windows are used (not shown) to reduce this effect to a negligible level.

For the detection of oil concentration in water, a falling-stream type of detector is also available. In this device, the sample stream is shaped into a rectangle (Figure 8.39l) as it falls through the viewing field of the ultraviolet beam and the photocell. Efficient optical filtration is important to overcome the unavoidable effects of direct reflection of incident radiation from the surface of the shaped stream.

CONCLUSIONS

The on-off oil-on-water detector is capable of measuring as little as a few drops of petroleum floating on the surface of water, thus making it possible to detect those oil pollution levels that are visible to the human eye. It therefore serves a useful purpose as an alarm device downstream of plant outfalls and especially during and immediately after oil loading and unloading operations from tankers and tank trucks. This device presents the maintenance problems usually associated with optical measurements, which is that windows must be kept clean. The air column between the water surface and the window does reduce fouling due to splashing, but window cleanliness must be maintained for maximum sensitivity.

The oil-thickness device (Figure 8.39j), being nonoptical, requires less maintenance. Because both devices can detect the absence or presence of oil slicks, they might also find application as oil spill monitors after oil transfer operations.

Floating on the surface of wastewater storage sumps or lagoons, the output of the oil thickness monitor can be used to start and stop oil reclamation equipment. These devices cannot be calibrated for a specific oil fraction, but just respond to any floating hydrocarbon.

The oil-in-water devices are optical, and even the falling-stream types require clean windows, although they are less subject to fouling than the sample chamber types. They must be calibrated for a specific type of oil, and other oil fractions will introduce errors. They were originally developed to monitor engine oil contamination in boiler feed water and condensate, which can be introduced by steam-driven feed water pumps.

These devices detect the presence of a specific hydrocarbon fraction in well segregated waste streams. Where particle size is expected to exceed 5 μm, sample preparation prior to the UV analysis is necessary. Use of a high-shear mixer such as a blender has been found to produce a well dispersed suspension suitable for measurement.

Reference

Zanker, K. J., Radio-frequency interface detector, *Oil & Gas J.*, January 30, 1984.

Bibliography

Adams, V., *Water and Wastewater Examination Manual*, Lewis, Chelsea, MI, 1990.

Arashmid, M. et al., Analysis of the Phase Inversion Characteristics of Liquid-Liquid Dispersions, *AIChE J.*, 26(1), 51–55, January 1980.

Arnold, K. E., Design concepts for offshore produced water treating and disposal systems, *J. Petroleum Technol.*, 276–283, February 1983.

Basrawi, Y., Oil-water sampling & monitoring devices, their application to custody transfer, 47th Analysis Division Spring Symposium 2002, April 2002, ISA.

Casamata, G. et al., Hydrocarbon separation through a liquid water membrane: modeling of permeation in a emulsion drop, *AIChE J.*, 24(6), 945–949, November 1978.

Crawford, H. M., Monitors detect oil in water, API Division of Refining Conference, Houston, May 1966.

Jones, K. W., An optical sensor for the food/water interface in a process pipeline, 1992 ISA Conference, Houston, October 1992.

Lucas, R. N., Performance of heavy oil: dehydrators, J. Petroleum Technol., 1285–1291, October 1969.

Maples, R. R. et al., Interface detector on oil treater cuts oil losses and maintenance, *Chem. Process.*, 88–89, July 1983.

© 2003 by Béla Lipták

8.40 Open Path Spectrophotometry (UV, IR, FT-IR)

J. M. JARVIS (2003)

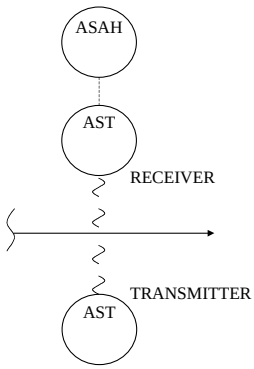

Flow Sheet Symbol

Applications:	Ambient air or fence-line monitoring for the detection of toxic or hazardous vapors for emissions monitoring as well as combustible vapors in personnel safety applications.
Types of Devices:	A. FTIR B. Combustibles detection C. Tunable diode laser D. UV
Costs:	A. $86,000 for minimal instrument configuration; $150,000 typical installed cost B. $5,000 to $7,000 C. $35,000 to 75,000, depending on configuration D. $ 25,000
Partial List of Vendors:	Air Instruments and Measurements (A) (www.aimanalysis.com) AIL Systems Inc. (A) (www.ail.com) Boreal Laser Inc. (C) (www.boreal-laser.com) Detector Electronics (B) (www.detronics.com) Draeger Safety Inc. (B, D) (www.draeger.com) General Monitors (B) (www.generalmonitors.com) Industrial Monitor and Control Corp. (A) (www.imacc-instruments.com) Midac Corporation (A) (www.midac.com) Norsk Elektro Optikk (C) (www.neo.no) OPSIS (C, D) (www.opsis.se) Sieger div. Zellweger Analytics (B) (www.zelana.com) Siemens Environmental Systems (D) (www.siemens.co.uk) Simrad Optronics ASA (B) (www.simrad-optronics.com) Spectrex Inc. (B, D) (www.spectrex-inc.com) Thermo-Environmental Instruments (D) (www.thermoei.com) Unisearch Associates (A, C) (www.unisearch-associates.com)

INTRODUCTION

The information in this section is used to augment the sections on air quality monitoring (8.5), carbon monoxide (8.10), hydrogen sulfide (8.26), nitrogen oxide analyzers (8.37), ozone (8.44), sulfur oxide analyzers (8.56), and toxic gas monitoring (8.59). For combustible monitoring, this section augments information in sections on combustibles (8.16) and hydrocarbons (8.25).

From the standpoint of instrument design, there is also some overlap of information with sections covering infrared analyzers (8.27) and ultraviolet and visible analyzers (8.61).

This section confines itself to the discussion of instruments based on absorption. It omits discussion of LIDAR (acronym for LIght Detection And Ranging, an abbreviation formed in analogy with RADAR) techniques because of their very specialized nature. Also omitted is the discussion of gas cloud imaging technology, which is based on backscatter

© 2003 by Béla Lipták

absorption. This technology is very new and has not yet been widely adopted in practical industrial situations.

Applications

Open path monitoring is used for analytical measurements in remote and inaccessible locations. The technique is also used for perimeter monitoring of structures and facilities. Such monitoring is either to detect the release of low levels of toxic and hazardous vapors, or it is to signal the releases of combustible hydrocarbons at relatively much higher levels. The use of open path monitoring is driven by either the need for probing an area without physical intrusion or by the need to monitor an area that is larger than one that can be cost effectively monitored with a requisite number of point detectors.

Open path monitoring is a subset of the techniques collectively called long path monitoring. Long path monitoring includes the use of multipass reflection cells to cover distances as great as hundreds of meters and achieve high detection sensitivity.

The two general uses of open path vapor detection, toxic and combustible detection, have resulted in instruments that have evolved specifically for each application. Open path toxic gas detection is generally used for very low-level detection—often in fence-line monitoring roles for estimation of emissions from a facility.

There are many more open path combustible hydrocarbon (OP-HC) detectors in use than there are toxic detectors. In a petrochemical plant, there can be as many as 150 OP-HC detectors, but only about half a dozen or fewer open path toxic detectors. Combustible detection requires much less instrument sensitivity, but instruments are highly engineered to provide much more protection against false alarms and to deliver high availability in excess of 99.9%. Immunity to false alarms is very important, because, when an alarm is actuated, executive action is frequently taken. Nondispersive infrared (NDIR) spectroscopy is most often used in OP-HC detectors.

Toxic Sensor Types

The types of open path toxic gas detector designs include open path Fourier-transform infrared (OP-FTIR) spectroscopy. This is a very commonly used technique that utilizes a number of very specific absorption bands in the infrared spectrum. A single instrument can be configured for the measurement of a wide variety of multiple components, and these sensors are highly adaptable for survey work.

In applications in which FTIR does not have sufficient sensitivity, open path ultraviolet (OP-UV) spectroscopy is frequently employed. This methodology can be used for applications involving the detection of homonuclear diatomic molecules (chlorine, bromine, etc.), which have no infrared absorption, or of molecules that absorb only weakly in the IR region, such as benzene, sulfur dioxide, and nitrogen oxides.

Because low-cost, highly reliable, solid state diode lasers have been developed and became available for high-volume telecommunications applications, a new class of open path detectors has been developed and applied to a subset of toxic measurement applications. Instruments in this category utilize the ability of the diode laser to scan over very short wavelength intervals. This method of measurement is referred to as open path tunable diode-laser absorption spectroscopy (OP-TDLAS).

INSTRUMENT DESIGNS

The four measurement technologies, OP-FTIR, OP-UV, OP-TDLAS, and OP-HC, all basically employ spectrophotometers designed for operation in a particular part of the spectrum. All spectrophotometers contain a light source, some transfer optics, a spectral dispersion element or optical filters, and optical detectors.

Figure 8.40a shows the primary components or all four classes of sensors. All these designs have a light source that illuminates the gas in the open path. The light source is collimated with transfer optics and is directed through the open path length to the receiving optics. The light is transferred through dispersing and filtering elements and is finally received by the optical detector. Table 8.40b shows how these elements differ in the four designs.

Note in Figure 8.40a that the dispersion elements can be utilized to predisperse the light prior to its passing through the open path sample, or it can be dispersed after passing through the sample. In OP-FTIR, the interferometer dispersing element is most often configured to modulate and predisperse the light prior to passing through the sample. This configuration

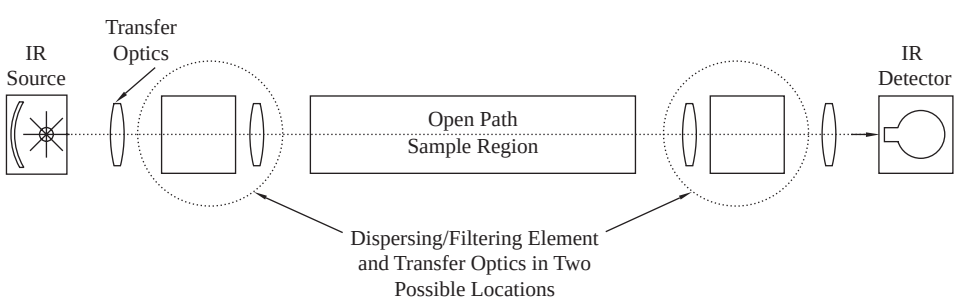

FIG. 8.40a
A schematic of a generalized open path sensor.

© 2003 by Béla Lipták

TABLE 8.40b
Common Components of Open Path Spectrophotometers

	OP-FTIR	OP-HC	OP-TDLAS	OP-UV
Wavelength range (μm)	Atmospheric transmission windows between 2.94 to 4.16 and 8.0 to 14.3	2.3 plus an adjacent reference wavelength band	Single wavelengths between 0.8 and 1.7	Atmospheric transmission window starting at 0.260 extending to visible
Light source	Heated globar	Xenon flash lamp or tungsten filament	Solid-state diode-laser	High pressure xenon arc
Dispersion element	Michelson interferometer*	Narrow-band optical filters*	None required except for electronics to scan laser wavelength	Grating spectrometer
Transfer optics	Gold coated mirrors	Glass lenses or mirrors	Glass lenses or mirrors	Silver mirrors
Optical detector(s)	Liquid nitrogen cooled mercury cadmium telluride photodiode	Indium galium arsenide photodiode	Indium galium arsenide photodiode	Linear CCD array

*These items are not dispersion elements in the classical sense but nevertheless serve the eventual purpose of isolating wavelengths for subsequent radiometric analysis by the optical detectors.

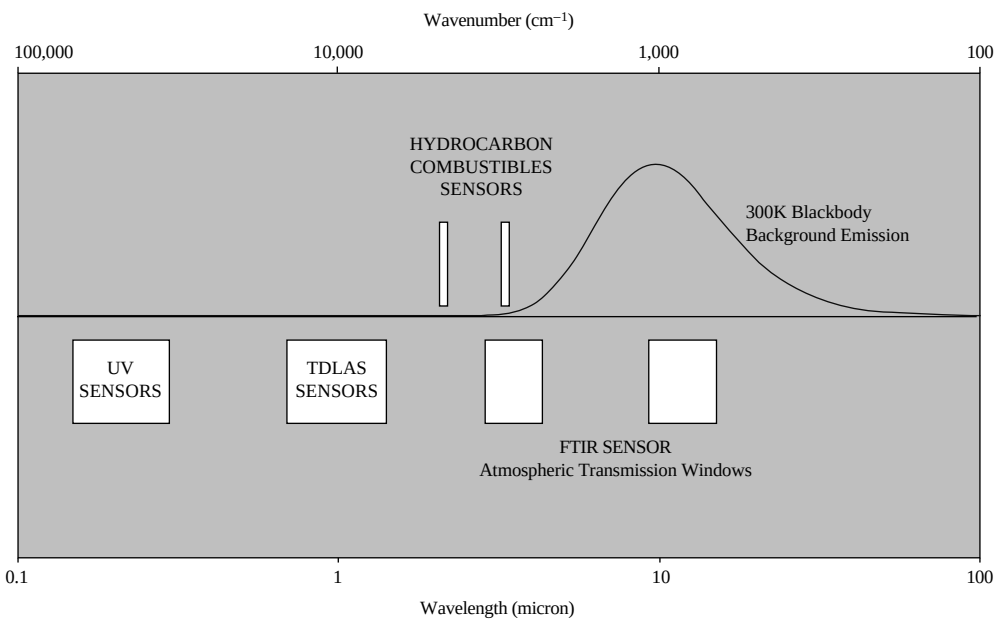

FIG. 8.40c
The regimes of operation in the electromagnetic spectrum for various path sensors. A 300 K (27°C) blackbody emission spectrum is superimposed on the diagram. Note that atmospheric absorption limits the range of FTIR measurements to two atmospheric transmission windows.

prevents thermal (blackbody) radiation from being added to the spectrum of the IR source.

Blackbody Radiation Interference

As shown in Figure 8.40c, there is significant IR emission in the ambient (27°C) blackbody curve that lies within the usable wavelength range of OP-FTIR systems. (The principles behind FTIR are discussed in more detail in Section 8.27.) The effect of uncompensated thermal background radiation is to introduce a bias and/or variability in the measured gas concentrations that have absorption bands that lie in this region.

The amount of ambient blackbody radiation is generally insignificant at the shorter wavelengths and has little affect on OP-HC, TDLAS, and OP-UV measurements. For these instruments, the dispersing element generally resides with the detector. This architecture provides a convenient, compact, and simple instrument implementation.

There can be extenuating circumstances, however, if the detector occasionally is pointed in a direction that has reflected sunlight. Sunlight approximates a 6000 K blackbody and subsequently has significant radiation through the visible portion of the spectrum into the UV. If proper consideration is not given to this potential interference in the

© 2003 by Béla Lipták

design of the instrument, incorrect concentration measurements will be made.

Interferometry

Before the 1980s, infrared measurements were made using dispersive spectrometers employing diffraction gratings. Today, as a result of low-cost computing, improved optical designs, and optical detectors, Fourier transform interferometers have almost totally replaced dispersive spectrometers for this task.

Interferometers have much increased optical efficiency and, as a result, yield readings faster and with higher signal-to-noise ratios, and offer higher spectral resolution than corresponding dispersive instruments. Additionally, as a fundamental consequence of interferometry, wavelength measurement precision is vastly improved over dispersive spectrometers.

However, as advantageous as interferometry is in the infrared portion of the spectrum, the advantages quickly disappear at shorter wavelengths. At visible and UV wavelengths, the optical efficiency advantage is nullified by vastly more efficient optical detectors and light sources. (The principles behind UV spectrometry are discussed in more detail in Section 8.61.) The mechanical tolerances for interferometery at short wavelengths become prohibitive as well. Therefore, dispersive spectrometry is still widely used for short wavelengths.

Beer's Law and Path Integrated Concentrations

Open path absorption spectrophotometry takes advantage of the fact that a beam of photons can interact with molecules in the atmosphere, depending on the photons' wavelength. As the photons interact with and are absorbed by the molecules, they are removed from the beam. The reduction in the number of photons in the beam is a measure of the number (or concentration) of molecules in their path.

Beer's law describes the light absorption phenomenon. For light at a given wavelength, $I(\lambda)$, and a gas concentration profile that varies as a function of position, $c(l)$, over the optical path, L, this phenomenon can be expressed in the differential form in Equation 8.40(1).

$$\frac{dI(\lambda)}{I(\lambda)} = \varepsilon(\lambda) \cdot c(l) \cdot dl \qquad \textbf{8.40(1)}$$

The term $\varepsilon(\lambda)$ is called the absorptivity coefficient. This coefficient is determined by the characteristics of the absorbing molecule and depends strongly on the wavelength and more weakly on the temperature and pressure.

Generally, the concentration profile, $c(l)$, is not known. If the concentration is assumed to be a constant and uniform average value over the optical path, $\bar{c}$, refered to as the path average concentration (PAC), then the equation can be integrated to a more familiar form of the Beer's law in Equation 8.40(2).

$$\int_{Io}^{I} \frac{dI(\lambda)}{I(\lambda)} = \varepsilon(\lambda) \cdot \int_{0}^{L} c(l) \cdot dl \Rightarrow -\ln\left[\frac{I(\lambda)}{Io(\lambda)}\right] = \varepsilon(\lambda) \cdot \bar{c} \cdot L \qquad \textbf{8.40(2)}$$

In this equation, $Io(\lambda)$ is the original intensity of the optical beam at a given wavelength, and $I(\lambda)$ is the intensity of the beam after absorption by the molecules in the atmosphere. The fraction $I(\lambda)/Io(\lambda)$ is termed the *transmittance*, as it denotes the fraction of transmitted light through the atmosphere. The negative logarithm of the transmittance is termed *absorbance*.

Path Integrated Concentration The concentration profile integrated over the path length is termed path integrated concentration (PIC). It is simply the PAC multiplied by the measurement path length. PIC has units of mass per unit volume (often $\mu g/m^3$) times pathlength in meters. Using the ideal gas law, the temperature and pressure at which the measurements were made and the molecular weight of the species being measured, these units can be converted to the more familiar volumetric units of ppm*m or ppb*m in the case of toxic vapor determination. For combustible gas determination, the more appropriate units are in terms of the lower explosive limit, LEL*m.

An open path instrument natively measures PIC. This is frequently misunderstood by newcomers to the field. An open path instrument operating over a 100-m path length will produce the same PIC reading for a narrow, concentrated 1-m thick plume having a vapor concentration of 300 ppm as it will for a 3-ppm vapor cloud dispersed across the entire 100-m path length. In each of these situations, the PAC would be 3 ppm. This is illustrated in Figure 8.40d.

OPEN PATH FTIR SPECTROMETRY

Open path FTIR (OP-FTIR) instrumentation consists of five major components: an IR light source, interferometer, transmitter and receiver transfer optics, IR detector, and data system/controller. The IR light source is generally a glow bar with high emissivity across the IR spectrum.

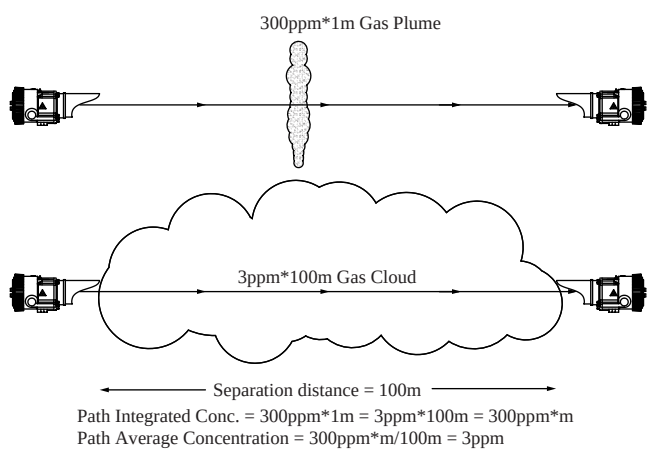

FIG. 8.40d
Illustration of path integrated concentration and relationship to path average concetration for narrow plumes and widely dispersed vapor clouds.

© 2003 by Béla Lipták

Interferometer

The interferometer is generally one of the Michelson variants and is used to modulate the light as a function of wavelength. The interferometer utilizes a moving mirror to generate an optical path difference between two beams of light that are allowed to interfere with each other. The position of the moving mirror must be measured to a tolerance of a fraction of the wavelength of light. This is frequently accomplished by using a highly stable tracking laser and counting interference fringes.

The moving mirror and the requirement for high-precision measurement of the optical path difference are two of the vulnerabilities of the interferometer mechanism. They limit reliability over time, operating temperature, and vibration. Much effort has been put into the design of interferometer systems to increase their reliability.

Transfer Optics and the Detector

Transfer optics are generally telescopes of the Newtonian or Cassegrainian configuration. Reflective optics are required, because inexpensive lenses that can cover the full useful range of wavelengths are not available.

The optical detector receives the modulated light. A cooled mercury cadmium telluride (MCT) detector is most often used to obtain the required sensitivity for the measurement. The detectors are cooled using liquid nitrogen (LN_2) or by a Sterling cycle heat pump.

The LN_2 dewar must be refilled every few days, which adds to operating maintenance costs. Sterling cycle coolers reduce the daily maintenance burden but are relatively expensive and have relatively short lifespans. In some applications, in which a relatively low-resolution measurement can be tolerated, deuterated triglycine sulfate (DTGS) detectors operating at room temperature can be used to address this maintenance issue.

Data System/Controller

Finally, the data system/controller performs a myriad of functions. It monitors the operation of the interferometer and synchronizes the collection of spectral data from the IR detector. It demodulates the spectral data using a fast Fourier transform algorithm and then does spectral manipulation to ratio the background and to compensate for background interferences and variation. As a final step, the corrected spectrum is processed by a pattern recognition and/or quantification algorithm that calculates path average concentration (e.g., average ppm) or path integrated concentrations (e.g., ppm*m).

Configurations

There are a number of instrumental configurations for OP-FTIR instruments. The simplest OP-FTIR systems are the so-called *bistatic* configurations. In these configurations, either a light source illuminates the open path region and is postmodulated with the interferometer, or the light source is premodulated before illuminating the open path region. The arrangement of the components of this design is shown in Figure 8.40e. This configuration derives its name from the fact that both the transmitter and receiver must be fixed in a static position and precisely aimed at each other.

The first real-time OP-FTIR systems had a direct source, postmodulated bistatic configuration. This configuration has the advantage of simplicity and hence is the least expensive design, but it also has a major disadvantage. This a result of the varying thermal emission of near field objects that produce a varying spectral background at frequencies below 2000 cm^{-1}. If uncompensated, this background will produce a negative bias on the measured concentration.

Most of this varying background emission and its effects can be compensated. This is done by turning off the source and by subtracting the spectrum while it is off. The direct source configuration has the advantage of being easily adaptable to a passive monitoring configuration where the thermal emission from the background or hot gas plumes act as the infrared source.

The premodulated bistatic configuration solves the background emission problem, because the source modulation occurs much faster than do changes in background emissions. However, since the detector and interferometer are separated by some distance, an additional cable is required to communicate between them.

Bistatic configurations in general have the requirement of supplying power at both the receiver and transmitter, which can be a disadvantage in some locations. Additionally, there is a requirement for alignment at both receiver and transmitter, which can be time consuming for mobile systems. It may be less of an issue for permanent fixed systems.

The so-called monostatic configurations were developed to address issues raised with bistatic designs. In a monostatic configuration, all of the optical components of the transmitter and receiver are in the same location, and a retroreflector is used to return the light from the transmitter to the receiver. This configuration derives its name from the fact that only the transceiver portion of the instrument needs to be precisely pointed, as the retroreflector returns light to its source regardless of orientation. A diagram of two monostatic configurations is shown in Figure 8.40f.

The single-telescope monostatic configuration is relatively simple to implement and is inexpensive. The use of a single telescope makes alignment simpler and lowers costs. The corner-cube array returns the light to the direction from which it came. This property reduces the divergence of the beam on its return path back to the detector compared to the divergence that would result from a flat mirror. Also, the retroreflector array can be very large so as to capture and return essentially all of the divergent signal from the telescope.

However, this design requires a beam splitter in the optical path that removes 50% of the light from the outgoing beam and 50% of the light from the return beam for an overall loss of 75% of the total light intensity.

The dual-telescope monostatic configuration has greater optical efficiency, as it does not utilize a beam splitter in the

© 2003 by Béla Lipták

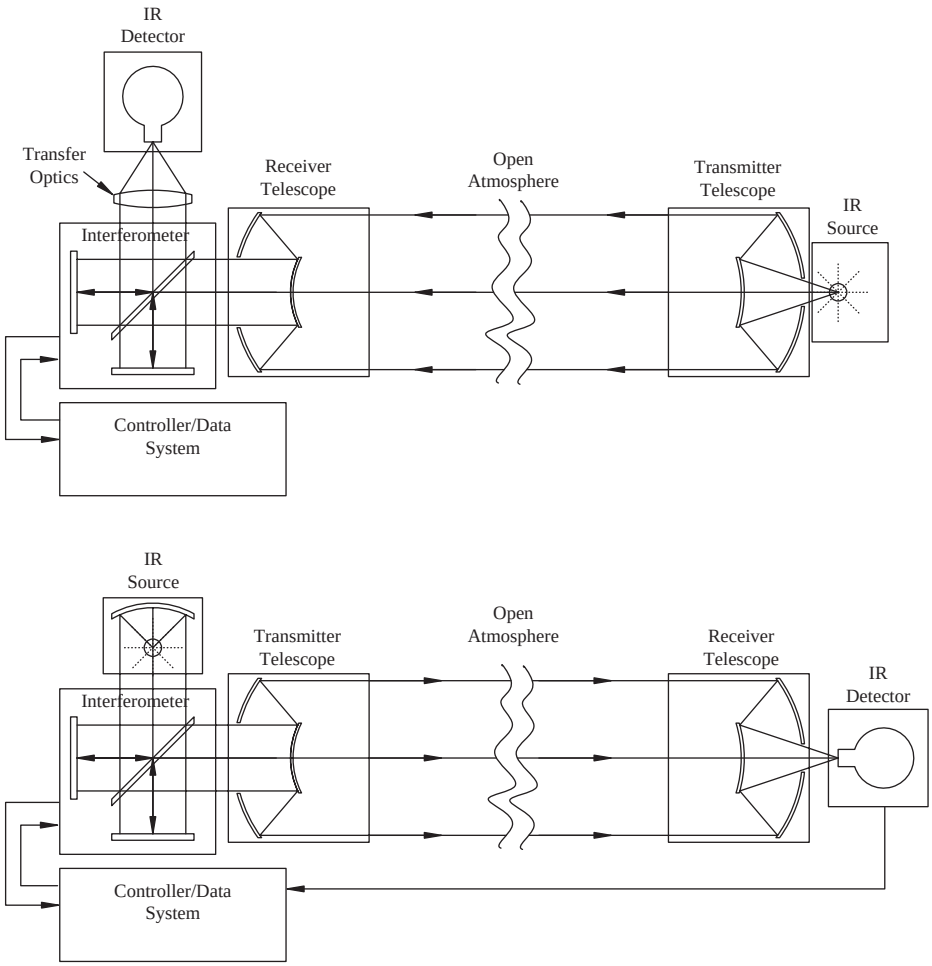

FIG. 8.40e

Bistatic configurations for OP-FTIR. Post-modulated configuration (top) uses interferometer to modulate the light after it passes through the open path. The premodulated configuration (bottom) uses the interferometer to modulate the light prior to passing through the open path.

optical path. It utilizes a translating retroreflector, which is essentially a portion of a very large cube. This single, large retroreflector does not have the divergence reversal properties of the corner cube array. The second telescope adds cost and complexity to the system.

OP-FTIR sensitivities for various molecular species are listed in Table 8.40g.

OPEN PATH ULTRAVIOLET SPECTROMETRY

Open path ultraviolet (OP-UV) spectrometry can be used to measure vapors or gases that have weak absorption characteristics and therefore low sensitivities in the IR spectrum. These include such compounds as nitrogen oxides, sulfur dioxide, benzene, and also homonuclear diatomic molecules, such as chlorine, that have no IR absorption spectra but acceptably strong UV absorption.

The UV spectra are much less specific than the IR spectra and do not have well-defined and separated absorption features. The number of compounds that can be determined by UV are much fewer than ones that are absorbing in the IR spectra. Still, the above listed and environmentally very important compounds make OP-UV an important complementary methodology.

The OP-UV Spectrometer

A schematic of an OP-UV spectrometer with a monostatic configuration is shown in Figure 8.40h. Bistatic configurations are available as well and are generally provided with fixed source.

Sources are generally high-pressure xenon arc lamps that emit a continuum from the UV to the visible spectra. The spatial extent of the arc can be very small, on the order of 250 μm, which lends itself to collimation with very low divergence. As a result, UV instruments can operate with path lengths up to several kilometers.

The long distances are facilitated by the low optical divergence and by the fact that water vapor and carbon dioxide do not absorb in the UV spectra as they do in the infrared. On the other hand, the short UV wavelengths can be strongly

© 2003 by Béla Lipták

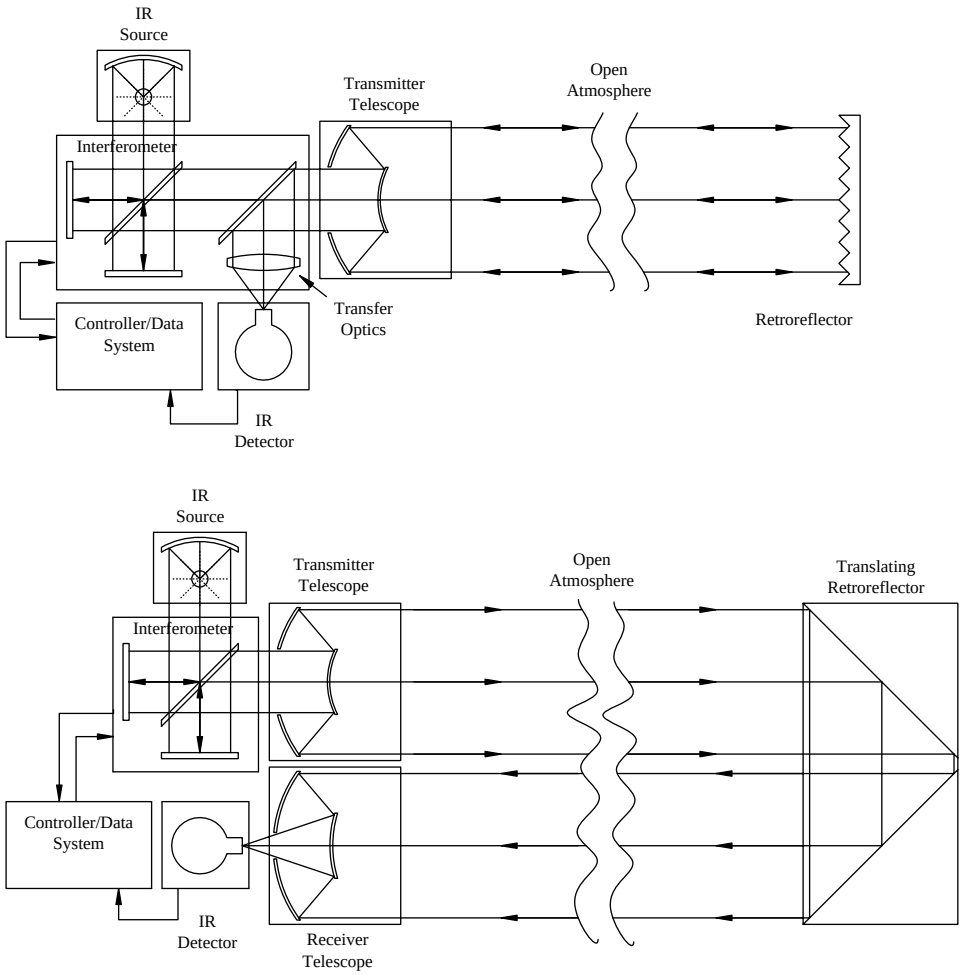

FIG. 8.40f

Two monostatic configurations for OP-FTIR both using premodulated configurations. The single telescope configuration (top) uses a corner-cube retroreflector array and is less optically efficient. The dual telescope configuration (bottom) is more optically efficient, but requires more telescope complexity.

scattered by aerosols such as fog, snow, smoke, and dust, which greatly degrade their performance. The short wavelength limit is determined by interference of molecular oxygen at wavelengths shorter than 260 nm.

The detector depicted in Figure 8.40h is a solid state array detector such as a CCD. The array detector permits the acquisition of intensities from multiple wavelengths simultaneously and without mechanically moving parts.

The spectra of many molecules in the UV, notably SO_2 and NO, in most cases have periodic absorption patterns resulting from the interaction of the vibrational energy levels with the electronics absorption. The overall absorption band can be quite wide and broadly overlapping. However, the periodicity can be used to identify the absorbing species. A Fourier transform of the UV absorption spectrum is often used to pretreat the data to isolate the absorbing species based on the spatial periodicity. The peaks thus produced can be further treated with spectral quantification algorithms such as the classical least squares method.

OP-UV has been used to detect and quantify the following gases: NO, NO_2, NO_3, formaldehyde, ozone, SO_2, benzene, toluene, and o, m, p-xylenes. Table 8.40i lists selected gases and detection limits available with OP-UV.

OPEN PATH TUNABLE DIODE LASER SPECTROMETRY

Open path tunable diode laser spectrometry (OP-TDLAS) is a relatively recent technology that has been applied commercially only to air monitoring within the past decade. Recently, these instruments have been made sufficiently rugged and reasonably simple to use in other applications.

Previously, lead salt diodes were used, emitting laser radiation in the 3–20 μm mid-IR portion of the IR spectrum. Instruments based on these lasers were capable of making very sensitive measurements, sometimes in the parts-per-trillion range. They were also very fast, having measurement times as low as 1/10 sec.

© 2003 by Béla Lipták

TABLE 8.40g
*Typical Detection Limits for Open Path FTIR**

Species	*PI-MDC Field Data** (ppm*m)*	*PI-MDC Noise Limited (ppm*m)*	*Species*	*PI-MDC Field Data (ppm*m)*	*PI-MDC Noise Limited (ppm*m)*
acetaldehyde	6	0.081	hydrocarbon continuum	3	0.06
acetic acid	1.5	0.088	hydrogen chloride	0.6	0.071
acetone	9	1.3	hydrogen cyanide	1.5	0.016
acetonitrile	15	0.13	hydrogen sulfide	90	51.2
acetylene	0.6	0.006	isobutane	0.6	0.027
acrolein	1.5	0.15	isobutanol	1.2	0.071
acrylic acid	3	0.088	isobutyl acetate	1.5	0.024
acrylonitrile	1.8	0.179	isobutylene	1.2	0.064
ammonia	0.6	0.057	isoprene	1.2	0.06
benzene	7.5	0.6	isopropanol	3	0.084
1,3-butadiene	0.6	0.054	isopropyl ether	3	0.038
butanol	4.5	0.114	methanol	1.2	0.077
1-butene	3	0.145	methylamine	6	0.137
cis-2-butene	7.5	0.276	methyl benzoate	6	0.038
trans-2-butene	3	0.145	methyl chloride	18	0.289
butyl acetate	1.5	0.027	methylene chloride	1.5	0.068
carbon monoxide	0.3	0.086	methyl ether	3	0.089
carbon tetrachloride	0.6	0.01	methyl ethyl ketone	12	0.197
carbonyl sulfide	0.6	0.014	methyl isobutyl ketone	4.5	0.072
chlorobenzene	3	0.159	methyl mercaptan	12	0.462
chloroethane	3	0.16	methyl methacrylate	1.5	0.06
chloroform	0.6	0.021	2-methyl propene	0.6	0.03
m-cresol	6	0.132	morpholine	0.6	0.016
o-cresol	1.2	0.063	nitric acid	0.3	0.037
p-cresol	3	0.077	nitric oxide	7.5	0.26
cyclohexane	0.9	0.01	nitrogen dioxide	15	0.045
1,ibromoethane	1.5	0.101	nitrous acid	1.5	0.013
m-dichlorobenzene	0.9	0.027	ozone	0.9	0.104
o-dichlorobenzene	0.9	0.025	phosgene	0.3	0.015
p-dichlorobenzene	0.6	0.05	phosphine	0.6	0.109
1,1-dichloroethane	3	0.104	propane	3	0.057
1,2-dichloroethane	9	0.095	propanol	6	0.137
1,1-dichloroehtylene	0.6	0.03	propionaldehyde	3	0.186
dimethylamine	6	1.72	propylene	1.2	0.107
dimethyl disulfide	3	0.101	propylene dichloride	3	0.247
1,4 dimethyl piperazine	0.9	0.034	propylene oxide	3	0.157
1,4 dioxane	0.6	0.037	pyridine	6	0.057
ethane	3	0.094	silane	0.3	
etanol	3	0.158	styrene	0.3	0.138
ethyl acetate	1.2	0.025	sulfur dioxide	9	0.046
ethylamine	6	0.131	1,1,1,2-tetrachloroethane	1.2	0.059
ethylbenzene	6	0.119	1,1,2,2-tetrachloroethane	6	0.174
ethylene	0.3	0.041	tetrachloroethylene	0.6	0.059

© 2003 by Béla Lipták

TABLE 8.40g Continued
*Typical Detection Limits for Open Path FTIR**

Species	PI-MDC Field Data** (ppm*m)	PI-MDC Noise Limited (ppm*m)	Species	PI-MDC Field Data (ppm*m)	PI-MDC Noise Limited (ppm*m)
ethylene oxide	3	0.025	toluene	7.5	0.073
ethyl mercaptan	15	0.14	1,1,1-trichloroethane	1.2	0.031
formaldehyde	1.5	0.139	1,1,2-trichloroethane	3	0.067
formic acid	0.6	0.034	trichloroethylene	0.6	0.06
furan	0.9	0.02	trimethylamine	3	0.038
halocarb-11 (CCl3F)	0.3	0.012	1,2,4-trimethylbenzene	1.5	0.098
halocarb-12 (CCl2F2)	0.3	0.016	vinyl chloride	1.2	0.097
halocarb-22 (CHClF2)	0.3	0.017	m-xylene	3	0.111
halocarb-113 (CFCl2CF2Cl)	0.6	0.033	o-xylene	6	0.044
hexafluoropropene	0.3	0.019	p-xylene	6	0.102

*Courtesy of Industrial Monitoring and Control Corporation.
**PI-MDC = Path Integrated-Minimum Detectable Concentration.
Field data typical for atmospheric path with 20,000 ppm H_2O, 360 ppm CO_2, and other atmospheric gases present.
Noise-limited levels assume an RMS noise of 5×10^{-5} using reasonably accessible bands.

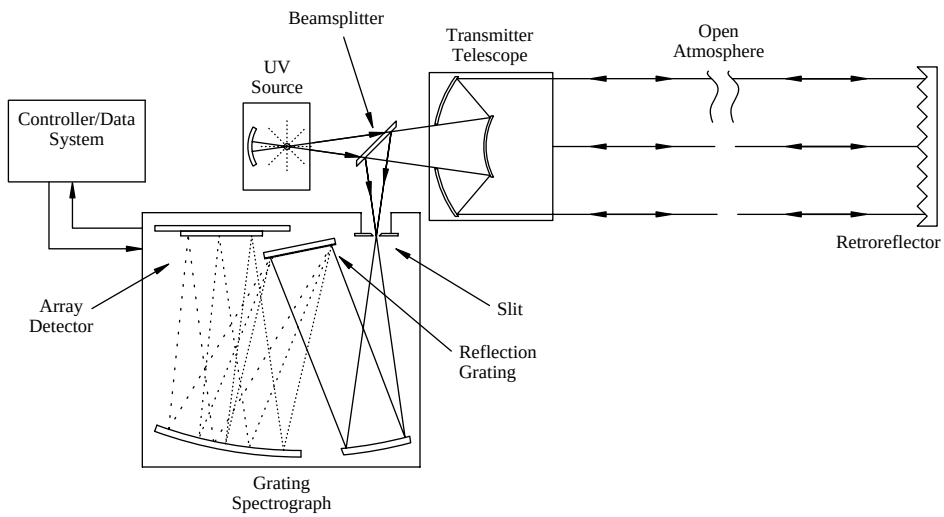

FIG. 8.40h
Schematic representation of an OP-UV spectrometer.

TABLE 8.40i
*Minimum Detection Limits for Selected Gases by OP-UV**

Species	Detection Limit (ppb*m)**
Nitrogen Oxide	100–225
Benzene	42–150
Ammonia	310–5870

*From Reference 1.
**Integration times vary from 1 to 5 min. Pathlength varied from 100 to 250 m.

On the other hand, complexity and cost limited their commercial acceptance. The lead salt lasers required liquid nitrogen cooling for operation, and IR absorptions accessible to the lasers were subject to pressure broadening effects, which limited their use to point monitoring applications using multipass cells operating at reduced pressure.

Diode Lasers

Diode lasers originally developed and manufactured in large volumes for telecommunications applications have been adopted to OP-TDLAS applications.

© 2003 by Béla Lipták

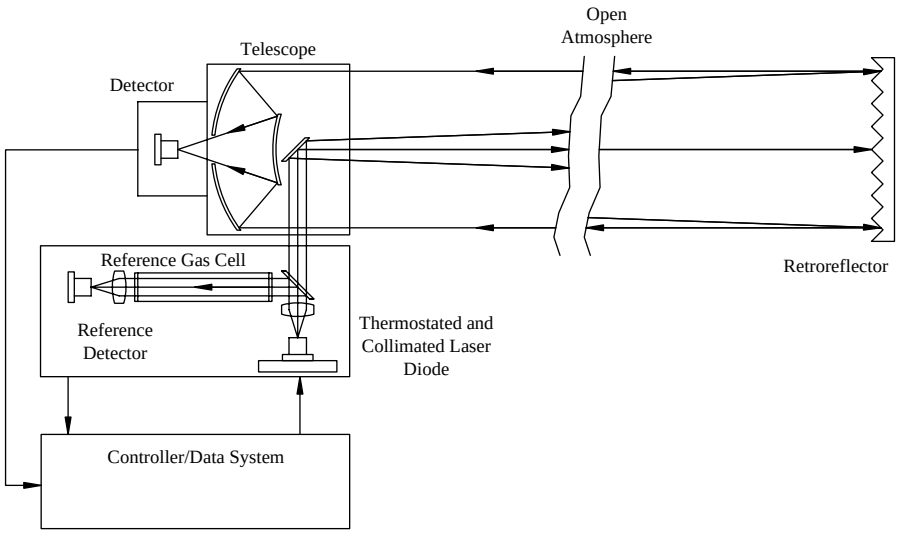

FIG. 8.40j
Schematic representation of an OP-TDLAS spectrometer in monostatic configuration.

Various diodes operate at or near room temperature and emit radiation between 0.6 and 2.5 μm in the near-IR portion of the spectrum. Wavelength tuning over relatively short wavelength ranges is achieved by temperature tuning as well as by varying the injection current into the diode itself. Temperature tuning is most often performed using a thermostat, which controls a thermoelectric cooler. Current tuning is performed using a programmable current source and is done at relatively high frequencies in the kilohertz range.

The absorption ranges that are accessible with these near-IR wavelengths are less sensitive than those in the mid-IR, but they are less susceptible to pressure-broadening effects. This permits their use in the open path monitoring applications. The reduction in detection sensitivity is partially recovered by the use of high-frequency wavelength modulation and by improved signal-detection techniques. Detection limits in the range of low ppm*m of target molecules are generally achievable.

Because these diode lasers are used in large volumes for telecommunications applications, their costs are an order of magnitude or two lower than those of lead salt diodes. Additionally, with near-IR wavelengths, traditional and low-cost glass optical materials can be used to fabricate the supporting optical assemblies instead of exotic and expensive mid-IR optical materials.

Applications

Molecules having absorption spectra that are accessible with diode lasers include NO, NO_2, HF, HCl, HCN, HI, NH_3, C_2H_2, CO, CO_2, H_2S, and CH_4. In some fortuitous instances, diode lasers have wide enough tunability to simultaneously measure multiple gases that have closely spaced absorption features. This is the case with HF and CH_4 and with CO and CO_2. Generally, however, a separate laser is required for each gas analyte of interest. Some commercial devices permit the fitting of more than one laser into a device so that multiple gases can be measured.

Principle of Operation

A schematic diagram illustrating the principle of operation of an OP-TDLAS is shown in Figure 8.40j. The monostatic configuration using a retroreflector is representative of commercial architectures.

In this configuration, laser light from a diode laser is directed to a beam splitter and then onto a steering mirror in the telescope, which directs the light out into the open atmosphere. The light interacts with the target gas molecules over a one-way optical path of up to 1 km and eventually falls onto a retroreflector array. The retroreflector array returns the light back to the telescope, which serves to focus it onto the optical detector.

The small portion of the light intercepted by the beam splitter is directed through a reference cell where a sample of the target analyte gas is present. The absorption of light by the gas in the reference cell is used to generate a feedback signal to the diode laser thermostat to keep the laser wavelength accurately tuned to the center of a gas absorption line.

Wavelength Modulation Spectrometry All commercial OP-TDLAS devices use some form of wavelength modulation to perform the measurement. The principle of wavelength modulation spectrometry is shown in Figure 8.40k. With this methodology, the laser, which is tuned to the center of an absorption line, is modulated at high frequency about the absorption maximum.

Temperature tuning is used to adjust the diode laser output to the center of the absorption line. Current tuning using a programmable current source is used to modulate the laser wavelength at kilohertz frequencies. As the laser wavelength

© 2003 by Béla Lipták

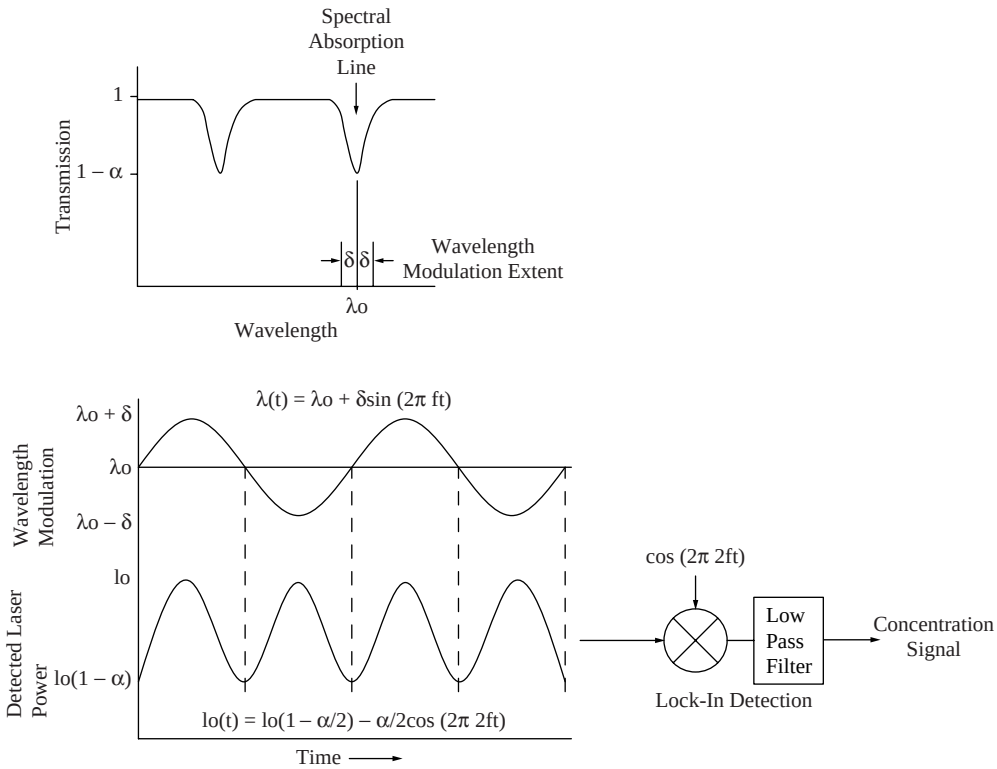

FIG. 8.40k

Principle of wavelength modulation spectrometry—The laser wavelength is tuned to an absorption line and modulated at frequency f. The laser intensity as it passes through the sample is modulated at frequency 2f. The concentration signal is recovered using lock-in detection techniques.

passes through the peak absorption wavelength, the detected laser intensity drops and then increases as the laser moves to one side of the line or the other.

A laser wavelength modulation frequency of f produces an intensity modulation of the laser at frequency 2f because of absorption of the analyte gas. The 2f intensity modulation is detected using lock-in detection. Lock-in detection at high frequency provides signal-to-noise enhancement that somewhat negates the general low absorptivity of the absorption lines. Measurements are typically made at a rate of one sample per second.

Table 8.40l lists some representative gases of interest for air monitoring that can be measured using TDLAS along with their approximate detection limits. For industrial applications, HF monitoring by OP-TDLAS has proven to be very useful because of the low detection limits achievable and because of the lack of interference.

TABLE 8.40l*

Some Representative Gases and Approximate PIC Detection Limits for OP-TDLAS Assuming Ability to Measure Absorbance to 1 Part in 10^5

Species	*Detection Limit (ppm*m)*
HF	0.2
H_2S	20
NH_3	5.0
CH_4	1.0
HCl	0.15
HCN	1.0
CO	40
NO	30
NO_2	0.2

*From Frish, M. B., White, M. A., and Allen, M. G., SPIE Paper No. 4199–05, 2000.

OPEN PATH DETECTION OF COMBUSTIBLES

A very important use of open path gas detection is to measure the concentration of combustible vapors. These vapors typically are hydrocarbons such as methane, ethylene, and so on, so the abbreviation OP-HC is frequently used. Detection is not strictly limited to pure hydrocarbons but can also be used to detect a number of organic vapors having a near-IR absorption spectrum due to CH bonds.

In terms of numbers of detectors sold, this application far dominates the market. OP-HC detectors can be found in the hundreds in oil and gas production facilities and, in lesser

© 2003 by Béla Lipták

numbers, in downstream transportation and distribution facilities as well as petrochemical facilities. In recent years, OP-HC detectors have seen increased usage to augment detection by traditional point hydrocarbon detectors, especially in situations where the probability of detecting a leak with a point detector is low.

OP-HC detection is especially useful for perimeter monitoring of tank farms, process areas, and other places where combustible vapor leaks can happen over a widely dispersed area. Because the emphasis is on safety applications, these detectors are optimized for low maintenance, avoidance of false alarms, and low costs.

These detectors typically are housed in flameproof enclosures and are suitable for deployment into Class 1, Division 1, or CENELEC Zone 1 hazardous areas. These devices typically have on-board heaters to melt snow and ice so that they can operate unattended and uninterrupted in inclement weather.

OP-HC Detector Design

Figure 8.40m shows a simplified schematic representation of an OP-HC detector. The bistatic configuration is most commonly used. Monostatic configurations using a retroreflector require electrical power for heaters and subsequent flameproofed enclosure, which somewhat reduces the advantage of that configuration for this application.

The detection principle relies on a two-channel nondispersive photometer. The active channel is equipped with an optical filter that limits light to the detector to the hydrocarbon absorption region of the spectrum. The reference channel observes the intensity of light in an adjacent portion of the spectrum that is free from hydrocarbon absorption. The optical filters are carefully specified to minimize false gas signals from differential absorption resulting from moisture as well as changes in the spectral output characteristics of the source over time.

Sources and Interference These devices utilize bright, modulated sources with receiver detection electronics tuned to the modulation frequency. Typically, a xenon flash lamp is used; less typically, a modulated tungsten filament or microfabricated IR source is used. The source is modulated to mitigate against solar interference, either directly as the sun enters the field of view of the detector at sunrise or sunset or indirectly as reflections from waves in offshore installations or other background objects.

Solar radiation that falls within the field of view of the receiver and that has intensity modulated frequency components within the acceptance bandwidth of the receiver electronics can result in a false gas signal. Source modulation is performed at frequencies where there is minimal solar modulation. The short pulse duration of the xenon lamp permits the utilization of a very narrow acceptance bandwidth filter in the receiver electronics.

Transmitter–Receiver Separation Distances between the transmitter and receiver vary typically between 10 and >120 m. Most vendors supply at least two models: a short-range unit for operation from 10 to 60 m, and a longer-range unit operating to the >120-m distance. The primary difference between the units is the efficiency of the collimation and condensing optics. In most cases, the worst-case visibility, resulting from fog and other atmospheric phenomena, presents the practical limit to transmitter–receiver separation.

Table 8.40n illustrates this point by showing how the maximum acceptable transmitter–receiver separation varies

TABLE 8.40n*

Typical Maximum Distance Between Transmitter and Receiver Over Which Proper OP-HC Operation can be Maintained at a Worst-case Fog Visibility

*Worst-Case Visibility in Fog** (m)*	*Transmitter/Receiver Separation Distance (m)*
6	10
15	25
18	30
24	40
30	50
36	60

*Courtesy of Detector Electronics.

**As measured by Meteorological Optical Range.

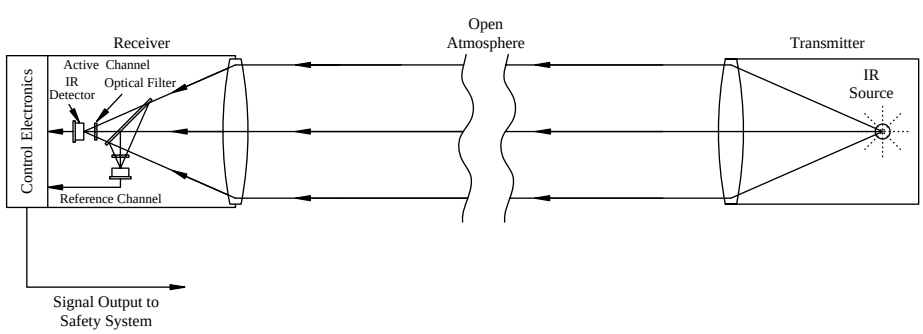

FIG. 8.40m

Schematic representation of an NDIR-based OP-HC detector.

© 2003 by Béla Lipták

with visibility in fog. Additionally, for very short-range applications <10 m, such as in ventilation ducts and small enclosures, the units can be equipped with optical attenuators fitted to the transmitter to keep the intensity of light within acceptable levels for the receiver.

The PIC range of the devices are usually set at around 0 to 5 LEL*m (LEL = lower explosive limit). This corresponds to a range of from 0 to 25%*m for methane (where 1 LEL of methane is 5%). Low and high alarms are generally set for 2 and 3 LEL*m, respectively.

Advantages and Limitations The use of PIC for open path has been the source of much debate and confusion, especially when attempts are made to correlate the range with point hydrocarbon detectors that are generally ranged from 0 to 1 LEL (0 to 100% LEL). Using PIC, it is clearly possible that the concentration of gas will exceed, in some location, in the beam's path the lower explosive limit. On the other hand, many point sensors would be required to be able to place a point detector at the precise location where such localized concentrations occur.

Much discussion and research has been done to arrive at a rational range setting strategy for OP-HC devices. There has been considerable work done at the Christian Michelson Institute in Norway on vapor cloud explosions. It has been found that, for oil and gas facilities, where largely unconfined explosions can be expected, flame front velocities below 100 m/s will not produce significant damage to personnel or facilities. Experiments have also demonstrated that flames need a run-up distance of approximately 5.5 m. Therefore, vapor clouds with dimensions less than this may not cause substantial damage.[3,4]

The primary signal output from an OP-HC detector is almost always a 4 to 20 mA current loop. The output is generally tied into a dedicated fire and gas safety system that can trigger some form of executive action in the facility. Secondary outputs are frequently available as well. Digital protocols such as HART and Modbus are common and permit the devices to be tied to PLCs and asset management computer systems.

References

1. Myers, J. et. al., Environmental Technology Verification Report, Opsis Inc. AR-500 Ultraviolet Open-Path Monitor, ETV Advanced Monitoring Systems Center, Battelle, Columbus, OH, September 2000.
2. Frish, M. B., White, M. A., and Allen, M. G., Handheld laser-based sensor for remote detection of toxic and hazardous gases, SPIE Paper No. 4199–05 in Water, Ground and Air Pollution Monitoring, Boston, MA, November 5, 2000.
3. Nolan, D. P., *Handbook of Fire and Explosion Protection Engineering Principles for Oil, Gas, Chemical, and Related Facilities*, Noyes Publications, Westwood, NJ, 1996.
4. Christian Michelson Institute, *Gas Explosion Handbook*, version 1.2, Publication No. CMR-93-A25034, Bergen Norway, 1993.

Bibliography

Brassington, D. J., Tunable diode laser absorption spectroscopy for the measurement of atmospheric trace species, *Adv. Spectroscopy*, 24, 83–148, 1995.

Childers, J. W., Russwurm, G. M., and Thompson, E. L., Instrumental parameters and their effect on open-path FT-IR data, *Proc. 89th Annual Meeting and Exhibition of Air and Waste Management Association*, Nashville, TN, June 23, 1996.

Kagan, R. L., Fundamental principles of IR and UV spectroscopic air quality sensors: instrumentation, *Proc. 89th Annual Meeting and Exhibition of Air and Waste Management Association*, Nashville, TN, June 23, 1996.

Kita, D., Schiff, H. I., and Gervase, I. M., Hydrogen fluoride measurement utilizing tunable diode laser absorption spectroscopy, *Proc. 41st Annual ISA Analysis Division Symposium*, Framingham, MA, April 21, 1996.

Kosterev, A. A. et. al., Thermoelectrically cooled quantum cascade laser based sensor for continuous monitoring of ambient atmosphere CO, *Appl. Optics*, 41(6), 2002.

Kosterev, A. A. et. al., Trace-gas detection in ambient air with a thermoelectrically cooled, pulsed, quantum cascade distributed feedback laser, *Appl. Optics*, 39(36), 2000.

Leo, M. R. et. al., Evaluation of open-path FTIR and UV air monitoring for use at the McColl superfund site, *Proc. 88th Annual Meeting and Exhibition of Air and Waste Management Association*, San Antonio, TX, June 18, 1995.

Phan, H. and Auth, J., Measurements of chemical emissions using FTIR spectroscopy, *Am. Lab. News*, August 1993.

Schiff, H. I. et. al., innovative optical methods for air and emission monitoring, *Proc. First North American Converence and Exhibition on Emerging Clean Air Technologies and Business Opportunities*, Toronto, September 26, 1994.

Schmidt, C. E., Evaluation of open path air monitoring (FTIR/UV) for first alert monitoring, fenceline monitoring, and estimating emission rates, *Proc. 88th Annual Meeting and Exhibition of Air and Waste Management Association*, San Antonio, TX, June 18, 1995.

Spellicy, R. L., Analytical methods for optical remote sensing, *Proc. 89th Annual Meeting and Exhibition of Air and Waste Management Association*, Nashville, TN, June 23, 1996.

Spellicy, R. L., Development and evaluation of a modular FT-IR Monitor for industrial use, *Proc. National Air and Waste Management Association (AWMA) Conference*, Salt Lake City, UT, June 18, 2000.

Tate, J. D., Chauval, P., and Taylor, K., Performance considerations for operating open-path FTIR (OP-FTIR) continuously in an industrial facility, *Proc. 88th Annual Meeting and Exhibition of Air and Waste Management Association*, San Antonio, TX, June 18, 1995.

Tate, J. D., Chauval, P., and Taylor, K., Industrial applications of optical sensing, *Proc. 89th Annual Meeting and Exhibition of Air and Waste Management Association*, Nashville, TN, June 23, 1996.

Vaughan, W. M., Introduction to IR/UV remote sensing of vapors, *Proc. 89th Annual Meeting and Exhibition of Air and Waste Management Association*, Nashville, TN, June 23, 1996.

© 2003 by Béla Lipták

8.41 Oxidation-Reduction Potential (ORP)

R. T. OLIVER (1972) **R. H. JONES** (1982) **D. M. GRAY** (1995)
B. G. LIPTÁK (2003)

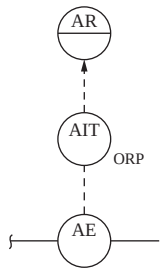

Flow Sheet Symbol

Design Pressure:	Vacuum to 150 PSIG (10.6 barg) is standard; special assemblies are available for up to 500 PSIG (35 barg)
Design Temperatures:	Generally from 23 to 212°F (–5 to 100°C)
Materials of Construction:	Mounting hardware available in stainless steel, Hastelloy, titanium, PVC, CPVC, polyethylene, polypropylene, epoxy, polyphenylene sulfide, Teflon,® and various elastomer materials; electrodes available in platinum or gold
Assemblies:	Submersion, insertion, flow-through, and retractable
Cleaners:	Ultrasonic, water or chemical jet washer, brushes
Range:	Any span between –2000 mV and +2000 mV
Inaccuracy:	Typically ±10 mV and a function of the condition of the noble metal electrode and of reference electrode drift; repeatability about ±3 mV
Costs:	Electrodes from $100 to $500; portable or bench-top laboratory display and control units from $300 to $1000; transmitters from $500 to $2000; cleaners available from $500 to $2000
Partial List of Suppliers:	ABB (www.abb.com) Analytical Technology Inc. (www.analyticaltechnology.com) Advanced Sensor Technologies Inc. (www.astisensor.com) Adwa Co. (www.adwa.com.tw) Broadley James (www.broadleyjames.com) Capital Controls Co. (www.capitalcontrols.com) Custom Sensors and Technology (www.customsensors.com) Electro-Chemical Devices (www.ecdi.com) EID Corp. (www.eidusa.com) Endress + Hauser (www.endress.com) Flow Corp. (www.flowlineoptions.com) The Foxboro Company (www.foxboro.com) George Fischer Inc. (www.us.piping.georgefischer.com) GF Signet (www.gfsignet.com) GLI International (www.gliint.com) Hamilton Co. (www.hamiltoncompany.com) Hanna Instruments (www.hannacan.com) Honeywell (www.honeywell.com) Horiba Instruments, Inc.(www.horiba.com)

© 2003 by Béla Lipták

Knick (www.knick.de)
Lakewood Instruments (www.waterdrop.com)
Mettler-Toledo (www.mt.com)
Nieuwkoop b.v. (www.nieuwkoopbv.nl)
Osmonics Lakewood (www.osmonics.com)
Pfaudler Inc. (www.pfaudler.com)
Phoenix Electrode Co. (www.phoenixelectrode.com)
Polymerton (www.polymerton.com)
Rosemount Analytical (www.rauniloc.com)
Sensorex (www.sensorex.com)
TBI-Bailey Controls (www.tbi-bailey.com)
Thermo Orion (www.thermo.com)
Thornton (www.thorntoninc.com)
Universal Analyzers (www.universalanalyzers.com)
Van London Co. (www.vanlondon.com)
Yokogawa (www.yca.com) (most popular are GLI, Rosemount, TBI-Bailey, and Yokogawa)

INTRODUCTION

The measurement and control of oxidation-reduction potential (also called ORP or redox potential) is applied in many applications in both industrial processing and in wastewater treatment. The more important applications include the following:

1. In ore leaching, metal is leached from the ore and converted to the desired state for further processing.
2. Toxic cyanides are oxidized to harmless reaction products in an oxidation-reduction reaction as part of the process to remove toxic heavy metals (Figure 8.41a).
3. In the pulp and paper industry, pulp is bleached with a variety of oxidants under ORP measurement and control.
4. Hexavalent chromium is reduced to the trivalent oxidation state as part of the process for removal of toxic chromium from metal finishing or from cooling tower blow-down wastewaters (Figure 8.41b).
5. The manufacture of chlorine bleaches is controlled by ORP.
6. In sanitary wastewater treatment, ORP is used to control the addition of an oxidant for odor control.

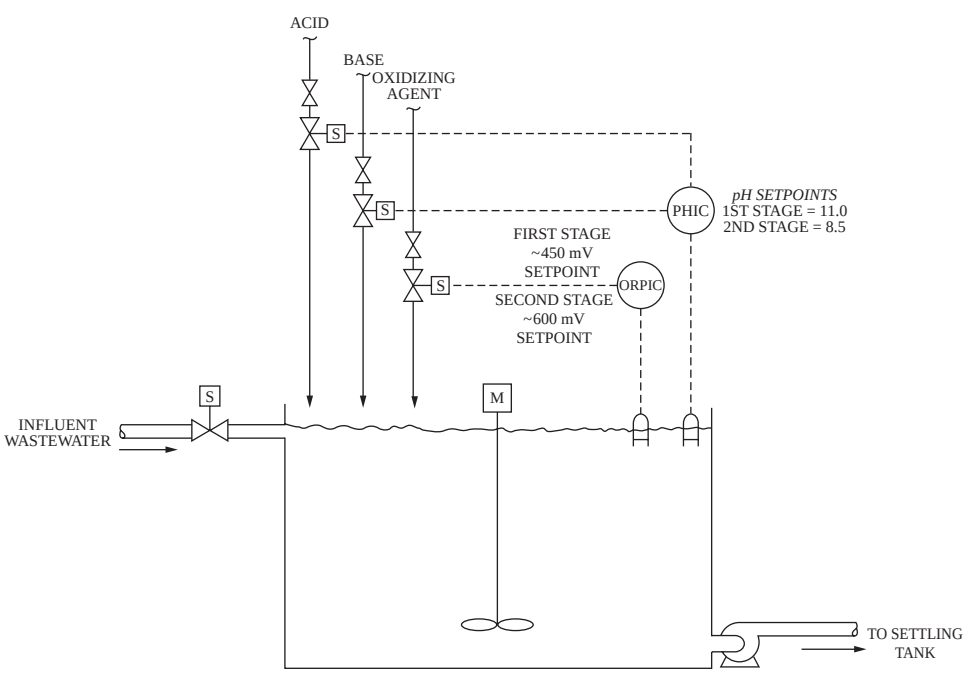

FIG. 8.41a
Batch oxidization of toxic cyanides.

© 2003 by Béla Lipták

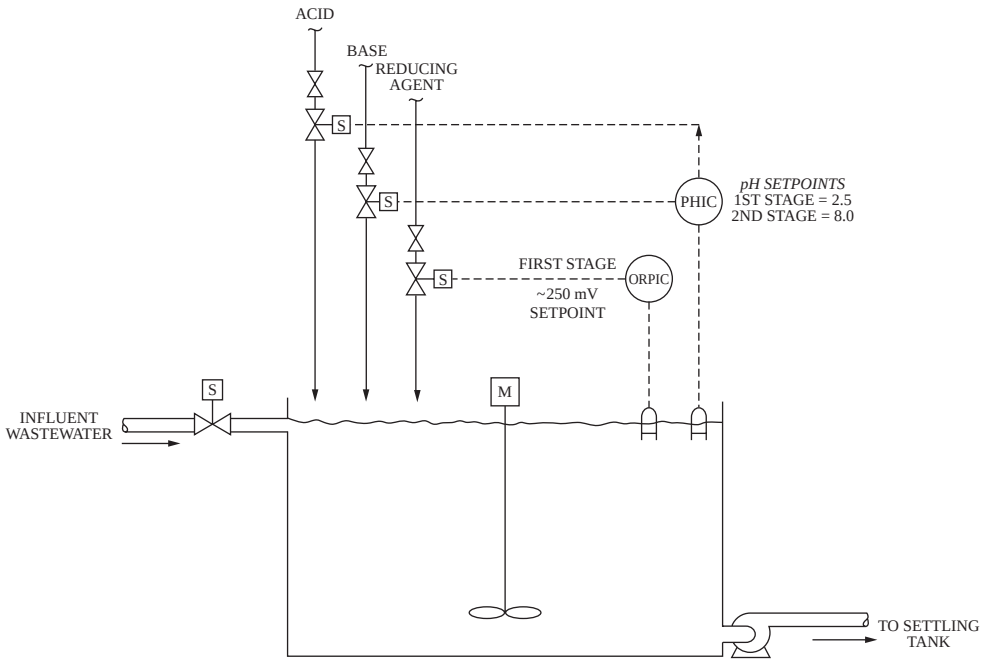

FIG. 8.41b
Batch reduction of toxic hexavalent chromium.

ORP MEASUREMENT PRINCIPLES

The reacting molecules in the oxidation-reduction reactions either gain or lose electrons and therefore end up with different electron configurations after the reaction.

Oxidation in a chemical reaction is the overall process by which a molecule loses one or more electrons and increases its state of oxidation. An oxidant is a substance that is capable of oxidizing another chemical specie in a process in which it acquires one or more electrons, which are lost by the specie being oxidized. In this overall process, the oxidant itself is reduced.

Reduction is the overall process in which a specie in a chemical reaction gains one or more electrons and decreases its state of oxidation. A reductant is a substance that is capable of reducing a chemical specie. The reductant loses the electrons, which are gained by the specie and is itself oxidized in the overall process.

The ORP Reaction

An ORP reaction involves an electron exchange that is capable of doing work. This capability is expressed in terms of potential for a half-cell, or electron, reaction. The potentials listed in Table 8.41c are for standard conditions, that is, where reactants and products are at unit activity. Voltages in this table are referenced to the standard hydrogen electrode (SHE), which is assigned the value of 0.000 V.

Note that the Table 8.41c reactions are written as reductions, which is the most often used convention. The term *ox/red* is used to indicate the oxidized form on the left side of the equation and the reduced form on the right. For example, the standard potential for ferric iron, Fe^{3+}, being reduced to ferrous, Fe^{2+}, is written as

$$E°Ox/Red = +0.770\ V \qquad \textbf{8.41(1)}$$

It will be noted that $E_{Red/Ox} = -E_{Ox/Red}$, which simply means that polarity is reversed when the reaction is written as an oxidation reaction. For example,

$$Fe^{2+} = Fe^{3+} + e.^{-}\ E°_{Red/Ox} = -0.770\ V \qquad \textbf{8.41(2)}$$

Half-Cell Reactions It is customary in dealing with oxidation-reduction reactions to write down separately the two half-cell reactions that make up the overall reaction. These are written so that known reactants are on the left and known products

TABLE 8.41c
Reduction Potentials of Solution in ORP Measurement

Reduction	*E°, Volts*
$O_3 + 2H_3O^+ + 2e^- = O_2 + 3H_2O$	+2.070
$Cr_2O_7^{2-} + 14H_3O^+ + 6e^- = 2Cr^{3+} + 21H_2O$	+1.330
$ClO^- + H_2O + 2e^- = Cl^- + 2OH^-$	+0.890
$Fe^{3+} + e^- = Fe^{2+}$	+0.770
Ag/AgCl electrode 4 M KCl	+0.199
$2H_3O^+ + 2e^- = H_2 + 2H_2O$	0.000
$Zn^{2+} + 2e^- = Zn$	−0.763
$CNO^- + H_2O + 2e^- = CN^- + 2OH^-$	−0.970
$Na^+ + e^- = Na$	−2.711

© 2003 by Béla Lipták

on the right. The following is a general equation in which the hydronium ion participates in the reaction, and therefore the potentials are pH-dependent.

Half-Reaction

$$aOx_2 + yH_3O^+ + n_2e^- \rightleftarrows bRed_2 + wH_2O \quad E_{Ox_2/Red_2} \qquad \textbf{8.41(3)}$$

Half-Reaction

$$cRed_1 \rightleftarrows dOx_1 + n_1e^- \quad E_{Red_1/Ox_1} \qquad \textbf{8.41(4)}$$

Overall Reaction

$$n_1aOx_2 + n_2cRed_1 + n_1yH_3O^+ \rightleftarrows n_1bRed_2 + n_2dOx_1 + n_1wH_2O \qquad \textbf{8.41(5)}$$

The Cell Potential

$$E_{overall} = E_{Ox_2/Red_2} + E_{Red_1/Ox_1} \qquad \textbf{8.41(6)}$$

At any point in the reaction, the solution or cell potential is given by

$$E_{cell} = E_{Ox_2/Red_2} + E_{Ox_1/Red_1} \qquad \textbf{8.41(7)}$$

which, at 77°F (25°C), is

$$E_{Ox_2/Red_2} = E^\circ_{Ox_2/Red_2} + \frac{0.059 \log}{n_2} \frac{[Ox_2]^a[H_3O^+]^y}{[Red_2]^b[H_2O]^w} \qquad \textbf{8.41(8)}$$

and

$$E_{Ox_1/Red_1} = E^\circ_{Ox_1/Red_1} + \frac{0.059}{n_1} \log \frac{[Ox_1]^d}{[Red_1]^c} \qquad \textbf{8.41(9)}$$

Setting Equations 8.41(8) and 8.41(9) to equal each other and rearranging, we get

$$(n_1 + n_2)E_{cell} = n_2E^\circ\ Ox_2/Red + n_1E^\circ_{Ox_1/Red_1} + 0.059 \log \times \frac{[Ox_2]^a[Ox_1]^d}{[Red_2]^b[Red_1]^e} + 0.059 \log H_3O^{+y} \qquad \textbf{8.41(10)}$$

Two other relationships can also be given, one for any reaction point and the other for the equivalence point. At any point in the reaction after the start,

$$Red_2 = \frac{n_1b}{n_2d}[Ox_1] \qquad \textbf{8.41(11)}$$

and at the equivalence point,

$$Ox_2 = \frac{n_1a}{n_2c}[Red_1] \qquad \textbf{8.41(12)}$$

Cell Potential at Equivalence Point Substitution of the ratio relationship Ox_2^a/Red_2^b or Ox_1^d/Red_1^c, as derived from Equations 8.41(11) and 8.41(12), into Equation 8.41(10), will provide the cell potential for the equivalence point. It can be an interesting exercise to see how this equivalence point potential changes when differing values of H_3O^+ (that is, pH) are substituted into Equation 8.41(10). By so doing, the profound effects that pH can have on equivalence and control point potentials will become apparent. This then shows that when hydronium, H_3O^+, or hydroxyl, OH^-, ions participate in ORP reactions, close control of pH may become just as important as close control of ORP.

Note again Equations 8.41(7), 8.41(8), and 8.41(9), which state that

$$E^\circ_{Ox_2/Red_2} + \frac{0.059}{n_2} \log \frac{[Ox_2]^a[H_3O]^y}{[Red_2]^b[H_2O]^w} = E^\circ_{Ox_2/Red_2} - E^\circ_{Ox_1/Red_1} + \frac{0.059}{n_1} \log \frac{[Ox_1]^d}{[Red_1]^c} \qquad \textbf{8.41(13)}$$

and

$$\frac{0.059}{n_1n_2} \log \frac{[Red_2]^{n_1b}[Ox_1]^{n_2d}[H_2O]^{n_1w}}{[Ox_2]^{n_1a}[Red_1]^{n_2c}[H_3O^+]^{n_1y}} = E^\circ_{Ox_2/Red_2} - E^\circ_{Ox_1/Red_1} \qquad \textbf{8.41(14)}$$

The equilibrium constant is given by

$$\frac{[Red_2]^{n_1b}[Ox_1]^{n_2d}}{[Ox_2]^{n_1a}[Red_1]^{n_2c10}} = \left(\frac{E^\circ_{Ox_2/Red_2} - E^\circ_{Ox_1/Red_1}}{0.59/n_1n_2} \right) \times [H_3O^+]^{n_1y} \qquad \textbf{8.41(15)}$$

Again, using the relationships of Equations 8.41(11) and 8.41(12) and substituting them into Equation 8.41(15), it is possible to determine the reaction's degree of completion for the specie of interest at the equivalence point for various pH levels.

Chromium Example As an example, consider a common industrial process in which hexavalent chromium is reduced with a ferrous sulfate solution. The half-reactions are as follows:

$$Cr_2O_7^{2-} + 14H_3O^+ + 6e^- = 2Cr^{3+} + 21H_2O$$

$$E^\circ_{Ox_2/Red_2} = 1.330$$

$$\frac{Fe^{2+} = Fe^{3+} + 16e^-}{Cr_2O_7^{2-} + 6\ Fe^{2+} + 14H_3O^+ = 2Cr^{3+} + 6\ Fe^{3+} + 21\ H_2O}$$

$$E^\circ_{Red_1/Ox_1} = -0.770 \qquad \textbf{8.41(16)}$$

© 2003 by Béla Lipták

For this reaction, we have the following:

$$Ox_1 = Fe^{3+},\ \ Red_1 = Fe^{2+}\ n_1 = 1\ \ a = 1\ \ b = 2\ \ y = 14$$

$$Ox_2 = Cr_2O_7^{2-},\ \ Red_2 = Cr^{3+}\ n_2 = 6\ \ \ c = 1\ \ d = 1\ \ w = 21$$

8.41(17)

Assume pH = 0, that is, $[H_3O^+] = 1$, and that at equivalence point $[Cr^{3+}] = 10^{-3}$. The equivalence point is calculated from Equation 8.41(10) as follows:

$$(n_1 + n_2)E_{cell} = n_2 E^\circ_{Ox_2/Red_2} + n_1 E^\circ_{Ox_1/Red_1} + 0.059 \log \frac{[Ox_2]^a[Ox_1]^d}{[Red_2]^b[Red_1]^c} + 0.059 \log [H_3O]^y.$$

8.41(18)

Using the ratio relationships determined from Equations 8.41(11) and 8.41(12), we get

$$7E_{cell} = 6(1.330) + 0.770 + 0.59 \log \frac{1}{2[Cr^{3+}]} + 0.059 \log [H_3O^+]^{14}$$

8.41(19)

and for varying levels of H_3O^+, we get the following equivalent point potentials:

$$\text{for } H_3O^+ = 1 \qquad E_{cell} = 1.273 \text{ V}$$

$$\text{for } H_3O^+ = .01 \qquad E_{cell} = 1.037 \text{ V}$$

$$\text{for } H_3O^+ = 10^{-4} \qquad E_{cell} = 1.793 \text{ V}$$

Using Equation 8.41(15) along with Equations 8.41(11) and 8.41(12), we can determine the degree of completion at the equivalence point. This equation reduces to

$$\frac{[Cr^{3+}]^8}{[Cr_2O^{7]^7}} = \frac{3^6}{6^6} 10^{56.9} [H_3O^+]^{14}$$

8.41(20)

$$[Cr_2O_7] = (10^{-24} \times 6.4 \times 10^{-58.9} \times [H_3O^+]^{14})^{1/7}$$

and therefore the following values can be calculated:

$$pH = 0, [H_3O^+] = 1 \qquad [Cr_2O_7^{=}] = 4.9 \times 10^{-12}$$

$$pH = 2, [H_3O^+] = 0.01 \qquad [Cr_2O_7^{=}] = 4.3 \times 10^{-8}$$

$$pH = 4, [H_3O^+] = 10^{-4} \qquad [Cr_2O_7^{=}] = 4.9 \times 10^{-4}$$

It now becomes obvious that the reaction is not complete at pH 4.0 but is substantially complete at pH 2.0, assuming that a concentration of 10^{-6} M is considered to be completion.

In industrial and laboratory work, the ORP cell potentials are measured not against a SHE electrodes but against an Ag/AgCl, 4 M KCl reference, with $E^\circ_{Ox/red} = +0.199$ V, or against a saturated calomel electrode (SCE) whose E° = 0.244 V. To convert to the measured potential, designated as $E_{AgCl\ ref}$, we use

$$E_{meas} = E_{cell} - E_{AgCl} \qquad \textbf{8.41(21)}$$

For example, the E° for the following cell:

$$Fe^{3+} + e^- - Fe^{2+}\ E_{Ox/Red} = 0.770 \text{ vs SHE} \qquad \textbf{8.41(22)}$$

and the potential measured vs. the silver-silver chloride reference is

$$E_{meas/AgCl\ ref} = +.770 \text{ V} - .199 \text{ V} = 0.571 \text{ V} \qquad \textbf{8.41(23)}$$

Absolute potentials in ORP measurement are not always used. Most equipment manufacturers use slightly modified pH analyzers for ORP measurement. These instruments are normally provided with the standarized or zero adjustment of the parent pH meter. Futhermore, in general, the polarity is reversed merely by reversing inputs.

Microprocessor-Based Units Microprocessor-based ORP analyzers generally provide wide rangeability with high-resolution digital displays, alarm/control set points, and output signal scaling limits.

Most chemical reactions that involve electron exchange are controlled near the equivalence point. A controlled excess of reagent is added to ensure that the reaction is driven to completion. Thus, most ORP reactions will be controlled just beyond the steep portion of the titration curve.

ORP SENSORS

The basic instrumentation used for ORP measurement closely parallels that used for pH measurement. In fact, many instrument suppliers use slightly modified pH analyzers for ORP detection, the main difference being changed sensitivity and a millivolt (mV) scale in place of a pH scale. The electrode hardware (that is, the equipment used to install the electrodes in the process stream) is generally the same as that used in pH systems (Figures 8.41d and 8.41e).

There are two major differences between an ORP system and a pH system. One is the sensing electrode, which in case of ORP measurement, is normally a noble metal (typically platinum or gold), although other metals and carbon have also been used on occasion. The second major difference is in temperature compensation. Process pH systems are typically temperature compensated, whereas ORP systems almost never are.

© 2003 by Béla Lipták

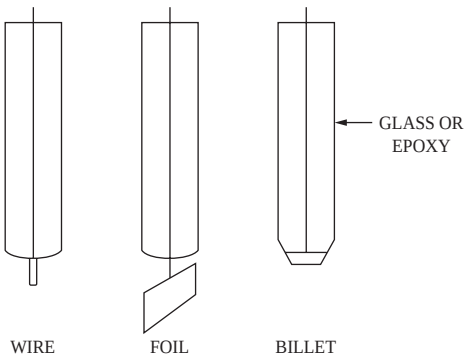

FIG. 8.41d
The various types of metallic ORP electrodes.

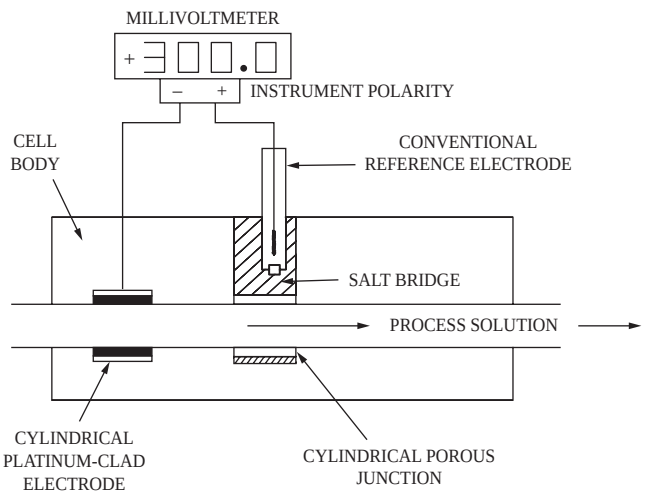

FIG. 8.41e
Cylindrical ORP electrode cell.

The Nernst Equation

The basic thermodynamics apply to both pH and ORP, expressed by the classical Nernst equation. For oxidation-reduction half-cell reactions, this may be represented as follows:

$$E_{cell} = E^{\circ}_{Ox/Red} + \frac{2.303\ RT}{nF} \log\left[\frac{Ox}{Red}\right] \qquad \textbf{8.41(24)}$$

where

E° = potential under standard conditions of unit activity referred to the SHE
R = the gas constant, 1.986 cal per mol degree
F = Faraday's constant
T = temperature in Kelvins
n = the number of electrons exchanged in the reaction

In the Nernstian representation of pH, n always equals 1. Note that, even in the very abbreviated listing of Table 8.41c, the n values vary among reactions. This, plus the fact that a given ORP reaction may encompass side reactions, makes it quite clear why it is difficult, if not impossible, to temperature compensate an ORP reaction.

In Equation 8.41(24), the standard potential $E^{\circ}_{Ox/Red}$ can be found in handbook tables, and values are usually given relative to the standard hydrogen electrode. Therefore, E_{cell} in Equation 8.41(24) for the prevailing concentration is also relative to SHE.

E_{meas} is the value that is read on the meter. If E_{cell} is known from calculation or from actual measurement, its potential value for other systems can be readily converted by

$$E \text{ vs SHE} = E \text{ vs SCE} + E_{SCE/Red} \qquad \textbf{8.41(25)}$$

or

$$E \text{ vs SCE} = E \text{ vs SHE} - E_{SCE/Red} \qquad \textbf{8.41(26)}$$

or

$$E \text{ vs Ag/AgCl Ref} = E \text{ vs SHE} - E_{Ag/AgCl/Red} \qquad \textbf{8.41(27)}$$

Electrode Mounting

ORP and pH electrodes can often be mounted in the same tees or flow-through chambers and can have practically identical appearances. The electrode shown in Figure 8.41f is a ruggedized, flat glass electrode having identical dimensions for both pH and ORP services. In case of the ORP probe, the only difference is the gold or platinum wire tip.

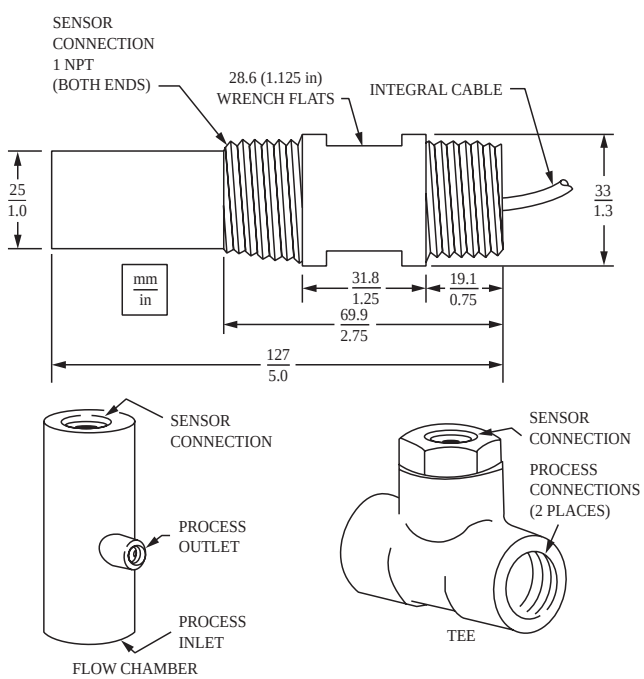

FIG. 8.41f
ORP and pH probes are packaged and mounted in the same way. (Courtesy of The Foxboro Co.)

© 2003 by Béla Lipták

ORP APPLICATIONS

It is certainly possible by use of the equations developed earlier to determine the equivalence potential for an ORP control reaction. For a reaction involving H_3O^+ or OH^- ions, Equation 8.41(10) shows the rather profound effects of pH on the equivalence point potential. Equation 8.41(15) can be used to calculate the degree of completion of the reaction, and, again, this relationship also shows the effects of pH. A reaction that pointedly illustrates these effects is the reduction of hexavalent chromium with sulfur dioxide or with bisulfite. However, many prefer a more empirical approach, as exemplified by chromium reduction.

Chromium Reduction

The chromium reaction typically takes place at a pH of about 2.0 to 2.5 (Figure 8.41b). At this pH, there is a smell of sulfur dioxide when the sulfite ion is in slight excess. An experienced operator might adjust the control point potential to attain a slight odor of sulfur dioxide and then make further adjustments based on laboratory analysis for hexavalent chromium.

It is certainly possible to set up a system based on calculation when all reactants and products are known. However, this is seldom the case in industrial processes, and only the very innocent would proceed without analytical verification of the results.

The ORP responses in two of the most common ORP applications are illustrated by the titration curves in Figures 8.41g and 8.41h. These curves are only examples. Response can vary considerably from one specific installation and from one process composition to another. Actual control points must be finely adjusted after the startup of a system. For details on how to configure and operate such control systems, refer to the *Process Control* volume of this handbook.

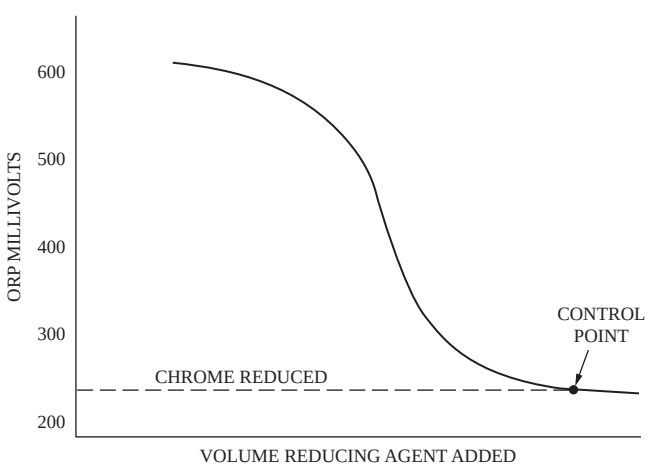

FIG. 8.41g
Chrome reduction titration curve.

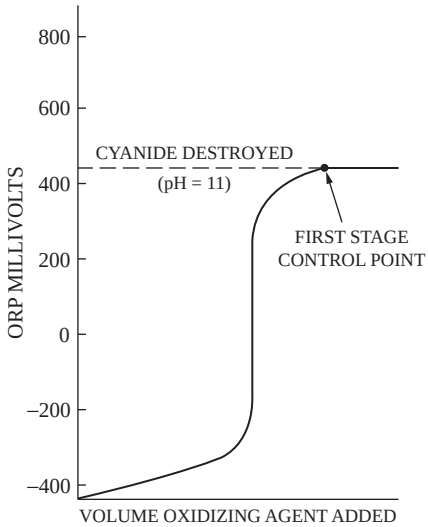

FIG. 8.41h
Cyanide oxidation titration curve.

ORP MAINTENANCE

Maintenance of an ORP measuring and control system is generally comparable to that of a similar pH system. This includes the need to keep the probes clean, which can be accomplished by scrubber-type probe cleaners shown in Figure 8.41i. However, because standards analogous to pH buffers are less common, there is sometimes a tendency to shortcut maintenance. The single most pressing problem source in case of ORP detectors is the noble metal electrode. It is subject not only to coating but also to poisoning, both of which may result in sluggish or inaccurate measurement of potential. This measurement error, in turn, may result in charging the wrong amount of reagent and not maintaining the desired reagent excess.

Jones[1] recommends utilizing standards that use quinhydrone-saturated pH buffers to establish known potentials as a check on the condition and response of the electrode system. When either a change in span or a shift in potential is noted, the recommended corrective treatment is cleaning with aqua regia. Data for selected quinhydrone-saturated buffers are given in Table 8.41j.

ORP CONTROL

ORP instruments are usually installed for control purposes. Because the measurement of ORP is quite similar to that of pH, it follows that many pH control considerations also hold for ORP. If, for example, an oxidizing solution such as dichromate in acid media is titrated with a reducing solution of ferrous ion, a titration curve that is quite similar to that of an acid-base titration can be generated. However, a more common practice is the reduction of hexavalent chromium with gaseous sulfur dioxide. Whereas it would be quite simple to catch samples of an acid waste and to titrate these samples

© 2003 by Béla Lipták



FIG. 8.41i
Scrubber type probe cleaner. (Courtesy of Universal Analyzers Inc.)

TABLE 8.41j
ORP Values (in Millivolts) of Quinhydrone-Saturated pH Buffer Solutions (Using Saturated Silver-Silver Chloride Reference Electrode[2])

	pH Buffer 68°F (20°C)	*77°F (25°C)*	*86°F (30°C)*
4.01	267	263	259
6.86	100	94	88
7.00	92	86	80
9.00	−26	−32	−39
9.18	−36	−43	−49

with a standard sodium hydroxide solution, doing a titration of hexavalent chromium with sulfur dioxide would present some problems.

A more expedient way of determining reagent demand is by catching representative samples and having them analyzed chemically to determine hexavalent chromium. The reagent demand of sulfur dioxide can then be determined from the balanced oxidation-reduction overall reaction. From these data, a number can be assigned to the trivalent chromium concentration at the equivalence point and the operating pH level assigned. From Equation 8.41(10) and 8.41(15), equivalence point potential and unreacted hexavalent chromium at the equivalence point can be determined.

Residence Time

Unlike acid-base neutralizations in which the reaction is virtually instantaneous, ORP reactions are frequently time dependent. The reaction vessel might be sized accordingly to provide the required residence time. A case in point is the oxidation of cyanide with available chlorine.

The reaction between free cyanide, CN^-, with the hypochlorite ion, OCl^-, is quite rapid. However, in many cases where cyanide oxidation is employed, part of the cyanide may exist as metal-cyanide complex ions. The fraction of free cyanide ions is extremely small. For some metal cyanide complexes, many hours of reaction time may be necessary to completely destroy the cyanide.

As was emphasized earlier, in ORP reactions involving hydronium, H_3O^+, or hydroxide, OH^-, ions, the measured potential at the equivalence point and the degree of completion of the reaction are both pH dependent. Therefore, pH control becomes as important as is ORP control (see Figures 8.41a and 8.41b). A constant potential is not indicative of an excess of reactant if pH is variable.

Most of the pH-related considerations that will be discussed in Section 8.48 also apply to ORP control. Of special importance is the provision of facilities to equalize the reagent demand by use of equalizing tanks or bleed-in tanks used to store and slowly emit strong solutions to the reaction vessel.

References

1. Jones, R. H., Oxidation reduction potential measurement, *JISA*, November 1966.
2. Derived from *Conversion Tables—Voltage to pH*, Leeds & Northrup Publication 077679, North Wales, PA, 1979.

Bibliography

Adams, V., *Water and Wastewater Examination Manual*, Lewis Publishers, Boca Raton, FL, 1990.

Control staff, How can pH probe fouling be reduced?, *Control*, October, 1992.

Dick, J. G., *Analytical Chemistry*, McGraw-Hill, New York, 1973.

Fresenius, W., *Water Analysis*, Springer-Verlag, Berlin/New York, 1988.

Gray, D. and Marshall, J., ORP Measurements in water and wastewater, *Ind. Water Treatment*, October 1993.

Latimer, W. M., *Oxidation Potentials*, Prentice Hall, Englewood Cliffs, NJ, 1952.

Light, T. S., Standard solution for redox potential measurements, *Anal. Chem.*, 44(6), 1038–1039, May 1972.

McNeil, B. M. and Harvey, L. M., *Fermentation: A Practical Approach*, Oxford University Press, New York, 1994.

Milazzo, G. and Caroli, S., *Tables of Standard Electrode Potentials*, John Wiley & Sons, New York, 1978.

Pauling, L., *General Chemistry*, W. H. Freeman, San Francisco, 1970.

Ross, M., Treating Water at ORP Speed, *Water Technol.*, May 1996.

Rushton, C. and Bottom, A., Measuring pH in low conductivity waters, *Kent Tech. Rev.* (G.B.), 24, March 1979.

Shinskey, F. G., *pH and pIon Control in Process and Waste Streams*, John Wiley & Sons, New York, 1973.

Weiss, M. D., Teaching Old Electrodes New Tricks, *Control*, July 1991.

© 2003 by Béla Lipták

8.42 Oxygen in Gases

R. K. KAMINSKI (1969, 1982) **M. RAZAQ** (1995), **REVIEWED BY B. G. LIPTÁK** (1995)
J. F. TATERA (2003)

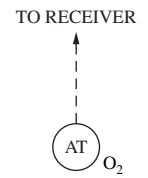

Flow Sheet Symbol

Design Types:
A. Deflection-type paramagnetic, dynamic dumbbell
B. Thermal-type paramagnetic
C. Dual-gas (differential pressure) paramagnetic
D. Catalytic combustion
E. Low-temperature electrochemical (galvanic, coulometric, polarographic)
F. Zirconium oxide, voltage-mode high-temperature electrochemical
G. Zirconium oxide, current-mode high-temperature electrochemical
H. Alarm, pocket-size, battery-operated
I. NIR spectroscopy

Sample Requirement:
All require a sampling system except F, G, and I, which can be inserted into the process as probes or utilize fiber optics process interfaces.

Sample Pressure and Flow:
Generally, near atmospheric pressures and low flow rates in the range of a few SCCM to a few SCFH

Materials of Construction:
Most are suitable for corrosive service, and types F, G, and I are also suitable for high-temperature service.

Speeds of Response:
Most will reach 90% of full scale in <1 min; response times of types F and G are in milliseconds, I and J are in seconds.

Operating Temperatures:
Most designs are suited for 200°F (93°C) service. Types F and G can operate at up to 1150°F (621°C) with stainless steel, up to 2200°F (1204°C) with mullite, and up to 2900°F (1593°C) with silicon carbide materials.

Ranges:
A, B. 0 to 25%
C. 0 to 100%
D. 0 to 2000 ppm
E. From 0 to 1 ppm up to 0 to 25%
F, G. Most often used for 0 to 5%, 0 to 10%, and 0 to 25%, but can be obtained with ranges as wide as 1 ppm to 20% or 0.5% to 100%
H. Usually set to alarm at about 18% oxygen concentration
I. From 100 ppm, typically 0 to 2% or 0 to 100% range

Inaccuracy:
Generally between 1% and 2% of full scale
A. Error 0.02% oxygen between 98% and 100% oxygen
D. 5% of span

Costs:
B, C. $6,000 to $10,000
D. $5000
E. Portable monitoring units from $1,200; industrial analyzers with spans in the ppm range from $5,000 to $20,000
F, G. $5,000 to $15,000
H. Portable, battery-operated, pocket-size, low-oxygen alarms $500 to $1000
I. $20,000 to $25,000

Partial List of Suppliers:
ABB Inc. (B, C, E, F) (www.abb.com or www.abb.com/analytical)
Ametek Inc. (D, F) (www.ametek.com or www.ametekpi.com)

© 2003 by Béla Lipták

Bacharach Inc. (E) (www.bachrach-inc.com)
BW Technologies (E, H) (www.gasmonitors.com)
California Analytical (www.gasanalyzers.com)
City Technology Ltd. (E) (www.citytech.co.uk)
Cole Parmer Instrument Co. (H) (www.coleparmer.com)
Compur Monitors (E, H) (www.compur.com)
Cosa Instrument Corp. (E, F) (www.cosa-instrument.com or www.cosaic.com)
Delphi Corporation (F) (www.delphi.com and www.delphiauto.com)
Delta F Corp. (E) (www.delta-f.com)
Delta Instrument LLC (F) (www.deltainstrument.com)
DET-TRONICS (E) (www.detronics.com)
Draeger Safety Inc. (E, H) (www.draeger.com)
Enmet Corp. (H) (www.enmet.com)
Gas Tech Inc. (D, E) (www.gastech-inc.com and www.thermogastech.com)
Horiba Ltd. (E) (www. horiba.com)
Illinois Instruments Inc. (F) (www.illinoisinstruments.com)
Industrial Scientific Corp. (E) (www.indsci.com)
Land Combustion Inc. (F) (www.landinst.com)
Meeco Inc. (E, F) (www.meeco.com)
MSA Instruments Div. (E, H) (www.msagasdetection.com)
M&C Products Analysis Technology Inc. (A, H) (www. mac-products.com)
Neutronics Inc. (E) (www.neutronicsinc.com)
Norsk Elektro Optikk A/S (I) (www.neo.no)
OPSIS AB (I) (www.opsis.se)
Panametrics Inc. (B) (www.panametrics.com)
Quatrosense Environmental Ltd. (E, H) (www.qel.dedesco.com)
Rosemount Analytical Inc. (A, F, G) (www.emersonprocess.com)
Servomex Co. (A, B) (www.servomex.com)
Siemens Energy & Automation (A) (www.sea.siemens.com)
Sick Maihak Inc. (B, E, F) (www.sickmaihak.com)
Sierra Monitor Corp. (E, H) (www.sierramonitor.com)
Teledyne Analytical Instruments (A, E, F) (www.teledyne-ai.com)
Thermo Electron Corp. (E, F) (www.thermo.com)
Unisearch Associates Inc. (I) (www.unisearch-associates.com)
Yokogawa Corporation of America (F) (www.yca.com)
Yokogawa Electric Corp. (G) (www.yokogawa.com)
Zellwegner Analytics Inc. (E, H) (www.zelana.com)

INTRODUCTION

Oxygen (O_2) is vital to a large variety of industrial and biological oxidation and combustion processes. Many industries use pure oxygen or inert gases that are allowed to contain only a few parts per billion of oxygen as a contaminant, and both of these applications usually require analyzers to determine their oxygen concentrations.

Specialized oxygen detectors are used for each type of application. Oxygen analyzers can depend on the paramagnetic and electrochemical properties of oxygen or can utilize the catalytic combustion techniques. Some spectroscopic techniques are also gaining in use and popularity to monitor O_2 while also monitoring other constituents in the process.

PARAMAGNETIC OXYGEN DETECTORS

Oxygen has a strong affinity for the magnetic field. This uncommon property, called *paramagnetism*, is shared by a few other gases such as nitric oxide, which has a susceptibility of about 43% of that of oxygen (Table 8.42a). These gases

TABLE 8.42a
*The Magnetic Susceptibility of Different Gases, with Oxygen Given as 100**

Acetylene (C_2H_2)	–0.24
Ammonia (NH_3)	–0.26
Argon (Ar)	–0.22
Carbon dioxide (CO_2)	–0.27
Carbon monoxide (CO)	+0.01
Ethylene (C_2H_4)	–0.26
Hexane (normal) (C_6H_{14})	–1.7
Hydrogen (H_2)	+0.24
Methane (CH_4)	–0.2
Nitric oxide (NO)	+43.0
Nitrogen (N_2)	0.0
Nitrogen dioxide (NO_2)	+28.0
Oxygen (O_2)	+100.0

*From *Guide to the Selection of Oxygen Analyzers,* Delta F. Corp.

© 2003 by Béla Lipták

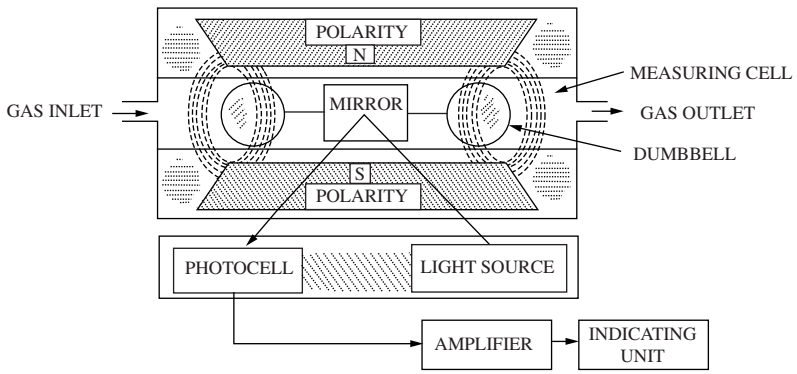

FIG. 8.42b
Deflection- or dynamic-type paramagnetic oxygen and analyzer.[1]

are not normally encountered in processes where oxygen analysis is required.

Some gases are repelled by the magnetic field. This diamagnetic effect is exhibited by methane, ethane, ethylene, carbon monoxide and dioxide, hydrogen, and argon. Of this group, methane exhibits the greatest negative susceptibility, about −1% relative to the positive susceptibility of oxygen.

The paramagnetic property of gaseous oxygen has been utilized in three oxygen analyzer designs.

1. The *deflection type* design requires that the paramagnetic property of the background gases be constant so as to permit the accurate measurement of oxygen concentration.
2. The *thermal* design depends on the decrease of the paramagnetic effect as the temperature of the paramagnetic gas (oxygen) increases.
3. In the *reference-gas* design, two gases with different oxygen contents are combined in a magnetic field, and a differential pressure is generated.

Deflection Analyzer

In the deflection-type analyzer (Figure 8.42b), the magnetic force acts on a test body that is free to rotate about an axis. The force is in proportion to the difference in the volume magnetic susceptibilities of the test body and of the gas around the body.

The dumbbell element is usually made out of glass and is filled with nitrogen or some other low magnetic susceptibility gas. Due to the nitrogen filling, the dumbbell deflects slightly away from the point of maximum magnetic strength. When the sample gas contains oxygen, this oxygen is attracted to the point of maximum field strength and thereby displaces and rotates the dumbbell farther from the point of maximum field strength. The highly paramagnetic oxygen concentrates the magnetic field, and the resultant rotation or imbalance force on the test body can be detected as a linear function of the oxygen concentration.

When the test body begins to swing out of the magnetic field, the mirror also rotates, thus upsetting the light balance. The result is a corrective imbalance in the electrostatic force on the test body. This imbalance force is opposite and almost equal to the magnetic force, which is a function of the oxygen concentration. This delicate sensor is mounted on shock absorbers. Dirt in the sample is likely to cause major difficulties; therefore, sample filtering should ensure the cleanliness of the stream.

The most significant limitations of the dumbbell-type paramagnetic oxygen analyzer are its delicate nature and its sensitivity to vibration and precise positioning. Variations in the magnetic susceptibility of the background gases in the sample or variations in sample temperature (if not compensated) can also contribute to errors. The applications of this unit include the monitoring of combustion efficiency and the monitoring of purity of breathing air or of protective atmospheres.

Thermal Analyzer

A flow-through type of *ring* element is illustrated in Figure 8.42c. In other designs, the sample gas diffuses into dead-ended cavities. In the case of the flow-through element

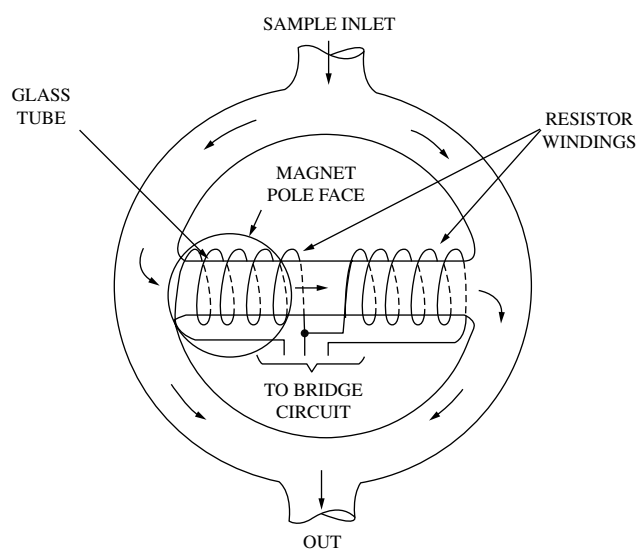

FIG. 8.42c
Measuring element in a thermal paramagnetic O_2 analyzer.

© 2003 by Béla Lipták

illustrated, the paramagnetic oxygen content of the sample—after it enters the ring—is attracted by the magnetic field in the horizontal tube, where resistors heat the gases. These resistors are connected in a Wheatstone bridge circuit to detect the resistance variations resulting from changes in flow rate.

The oxygen in the heated sample loses much of its paramagnetism, thus attracting cooler oxygen from the incoming sample, which then displaces the hot, less magnetic oxygen. This action produces a convection current commonly called a *magnetic wind*. The wind flow rate is a function of oxygen concentration and is detected by thermistors (thermal loss sensing heated resistors). The gas flow cools the left-hand winding and heats the right-hand winding, and the resulting temperature difference unbalances the bridge.

Because the heating and cooling of the resistors is not only a function of the flow rate but also of the composition and pressure, errors can be introduced by variations in these properties. The presence of diamagnetic materials can also introduce errors by affecting the magnetic wind. Errors can also occur as a result of a change in sample pressure, because the magnetic susceptibility of oxygen varies as the square of the static pressure.

Some manufacturers offer pressure compensation in the form of special cells with compensating resistors that are also made part of the Wheatstone bridge circuit. Other suppliers require that precise pressure regulation be provided, within a few inches H_2O. Variations in barometric pressure can also cause measurement errors of up to ±2% on narrow ranges, because the effect of atmospheric pressure change is about 0.02% O_2 per inch H_2O (250 Pa).

In comparison to the dumbbell-type dynamic sensor, the advantage of the magnetic wind analyzer is its rugged design. Its disadvantages include the need for compensating for both temperature and for the thermal conductivity variations in the background gases of the sample. High temperatures can also cause degrade stability and reliability.

Dual-Gas Analyzer

Figure 8.42d shows a dual-gas cell. Two gases with different oxygen contents are brought together, producing a differential pressure. The reference gas can be 100% oxygen, nitrogen, or air. The reference gas passes through two ducts, one of which meets the sample gas in the magnetic field. Because both ducts are connected, the pressure, in proportion to the oxygen content of the gas sample, produces a flow that can be measured. All wetted parts can be made of stainless steel or tantalum.

The dual-gas or differential-pressure-type oxygen analyzer is rugged, but it is sensitive to vibration, for which some manufacturers are able to compensate. As with all other paramagnetic analyzers, this one is also limited in its sensitivity to the percentage range and is not suited for trace oxygen measurements.

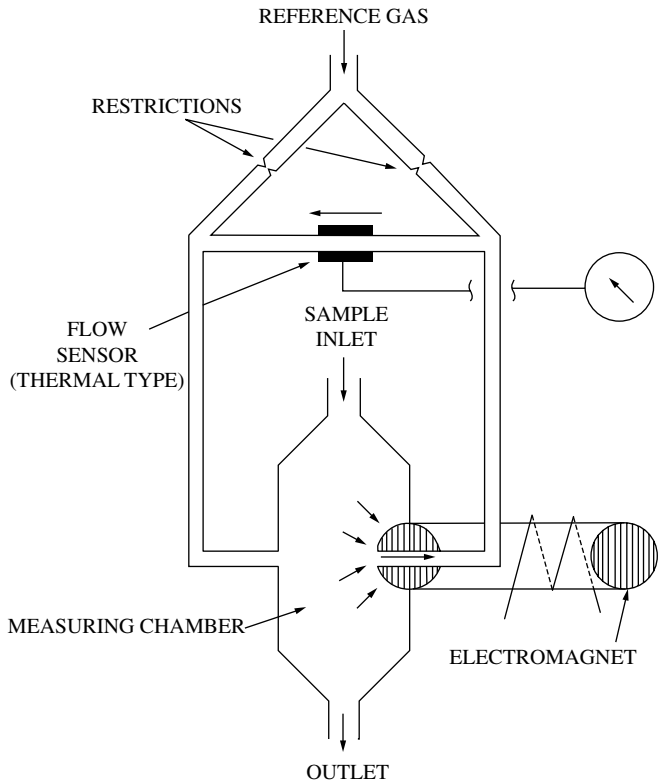

FIG. 8.42d
Measuring element in a dual-gas paramagnetic O_2 analyzer.

CATALYTIC COMBUSTION OXYGEN DETECTORS

This approach to oxygen analysis is very similar to the techniques outlined in Section 8.16 in connection with combustible gas detection, and the reader is referred to that section for additional details (Figures 8.16c and 8.16d).

Analysis is accomplished by oxidizing a fuel and measuring the amount of heat generated. The sensor consists of a measuring cell and a reference cell, with a filament in each. The measuring filament is provided with a catalytic surface to oxidize the fuel, while the reference filament serves only to compensate for variations of temperature and thermal conductivity in the sample. In some designs, the unit is thermostatically maintained at a constant temperature (see Figure 8.42e). The filaments are connected in a bridge system.

First, the sample and fuel are mixed, and then they enter both the measuring and reference cells. In the measuring cell, the fuel is burned in the presence of the noble metal catalyst filaments. The resulting filament temperature is measured by detecting its resistance, which is a measure of the oxygen content of the gas sample.

In the reference cell, the temperature of the mixture is sensed, but no combustion takes place. The temperature difference between the two cells is attributed to the heat generated by combustion in the measuring cell and is used to calculate the amount of oxygen that was present to support the combustion.

© 2003 by Béla Lipták

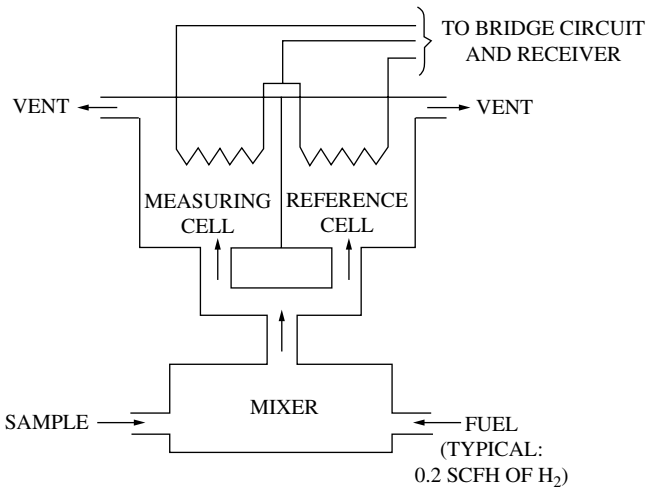

FIG. 8.42e
Catalytic combustion oxygen analyzer.

ELECTROCHEMICAL OXYGEN DETECTORS

Electrochemical oxygen detectors fall into three main categories, which are

1. The high-temperature fuel cell detectors, utilizing the conduction of oxygen ions (O^{-2}) from one electrode to another through a solid oxide electrolyte (e.g., zirconium oxide)
2. Ambient-temperature galvanic detectors, which operate by oxygen reduction at the cathode and dissolution of an active anode such as cadmium or lead in an electrolyte
3. The polargraphic detectors, consisting of three electrodes (cathode, anode, and a reference) and an electrolyte

The operation of a polargraphic detector is similar to that of the galvanic detectors except that, here, an external potential is applied to the cathode to drive the oxygen reduction reaction.

The high-temperature fuel cell oxygen detectors are used for measurements of gaseous oxygen, whereas the galvanic and polargraphic oxygen detectors can be used for both gaseous and dissolved oxygen measurements in liquids.

All three types of electrochemical oxygen detectors measure the partial pressure of oxygen and require either temperature control or temperature compensation. Some galvanic-type oxygen detectors also require the control of gas flow rate or compensation for its variation.

High-Temperature Zirconium Oxide Fuel Cells

In these oxygen detectors, the oxygen is ionized in both a sample and a known reference gas stream. The sensing cell consists of a calcium-stabilized zirconium oxide solid electrolyte, which is provided with porous noble metal (typically platinum) electrodes on the inner and outer surfaces of the solid electrolyte (Figure 8.42f).

The cell typically operates at temperature of (147°F) 800°C. When sample and reference gas streams come in contact with the electrode surfaces, the oxygen ionizes into O^{-2} ions. The oxygen ion concentration in each of the streams is a function of the partial pressure of oxygen in the stream.

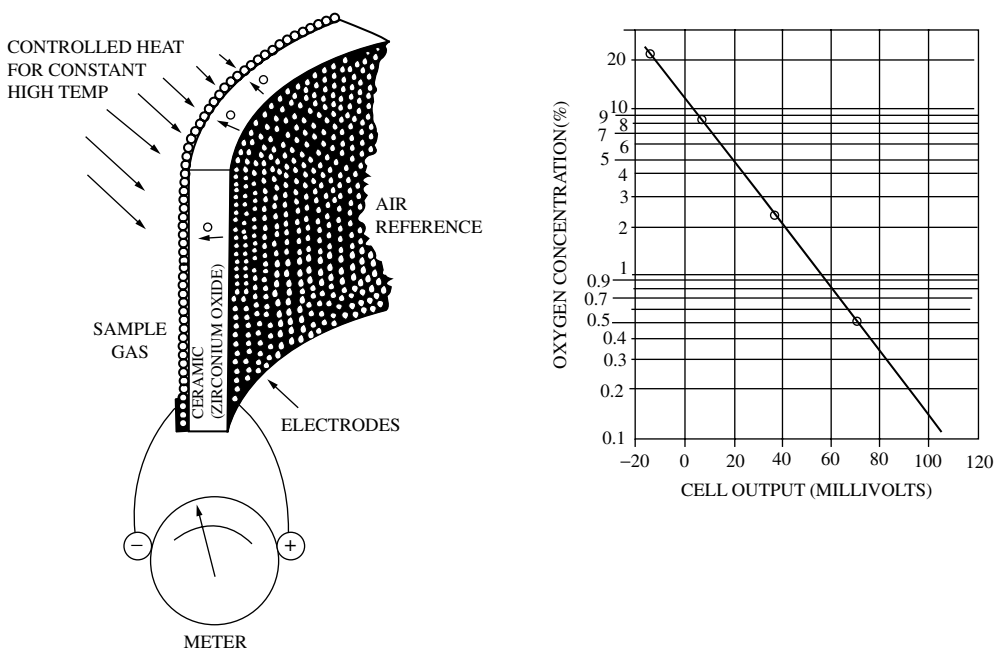

FIG. 8.42f
The flow of oxygen ions through the hot zirconium oxide electrolyte causes a voltage difference across the thickness of the element. (Courtesy of Ametek Inc.)

© 2003 by Béla Lipták

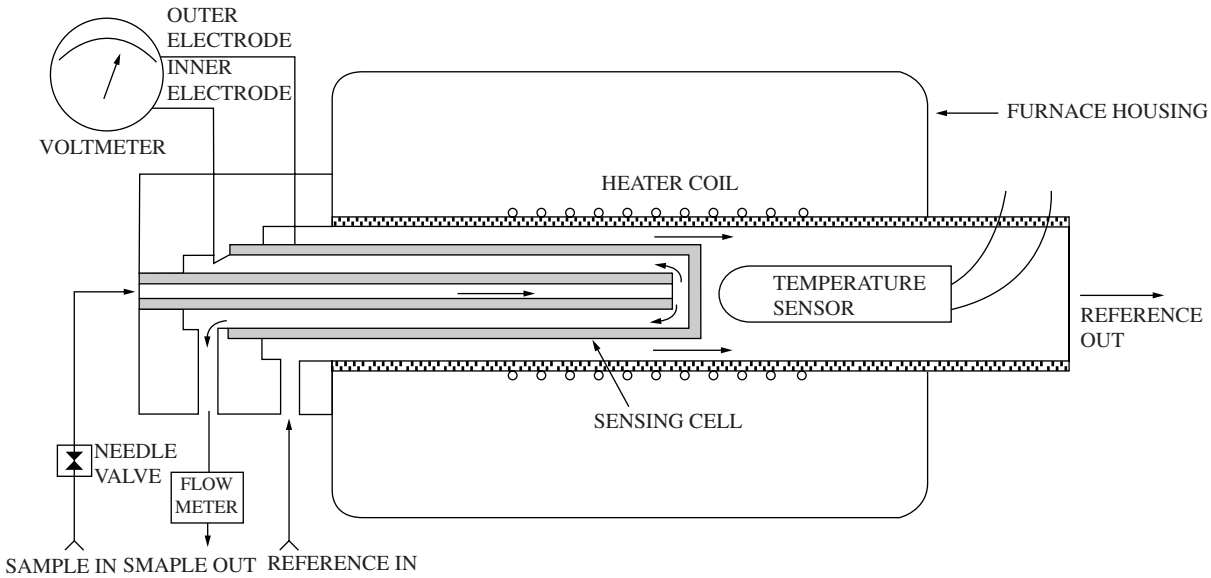

FIG. 8.42g
High-temperature electrochemical oxygen detector.

The potential at each electrode depends on the partial pressures of oxygen in the gas stream.

The electrode with higher potential (higher oxygen concentration) will generate oxygen ions, whereas the electrode with lower potential (lower oxygen concentration) will convert oxygen ions into oxygen molecules. The cell reaction at the two electrodes can be expressed as

$$O_2 + 4e^- \rightarrow 2O^{-2} \quad \text{(at the cathode)} \qquad \textbf{8.42(1)}$$

$$2O^{-2} \rightarrow O_2 + 4e^- \quad \text{(at the anode)} \qquad \textbf{8.42(2)}$$

The open-circuit voltage relates to oxygen partial pressure by Equation 8.42(3), which is also referred to as the Nernst equation,

$$E = \frac{RT}{nF} \ln \frac{O_2 \text{ partial pressure in reference gas}}{O_2 \text{ partial pressure in sample gas}} \qquad \textbf{8.42(3)}$$

where

E = the open-circuit voltage developed
R = the universal gas constant
T = the temperature
n = the number of electrons transferred per molecule of oxygen
F = Faraday's constant

From the above equation, it can be seen that the cell output signal changes logarithmically with the partial pressure of oxygen in the sample stream when the partial pressure of oxygen in the reference stream is constant.

The maximum detectable oxygen concentration in the sample stream is equal to the oxygen concentration in the reference stream. When the oxygen concentration in the sample reaches this point, the open-circuit voltage will be zero. If the oxygen concentration in the sample stream exceeds the oxygen concentration in the reference stream, the oxygen ions will move in the opposite direction, and the open-circuit voltage will be of the opposite polarity.

It should also be noted that the open-circuit potential is directly related to the temperature of the cell. Therefore, accurate control of the cell temperature or temperature compensation is required.

Cell Design and Limitations Figure 8.42g illustrates the design of a typical cell. The temperature of the cell is maintained at about 1472°F (800°C). The sample and reference gas streams flow near the porous platinum electrodes, which are in contact with the solid oxide electrolyte. Oxygen ionizes at the electrode surfaces. Equilibrium between oxygen and oxygen ions is established at the electrode surfaces, and the concentration of oxygen in the sample stream is determined by measuring the open-circuit voltage.

Such oxygen detectors should be used only for those applications in which the sample contains no combustibles, because, at the elevated temperatures, the oxidizable material in the sample gas will stoichiometrically combine with oxygen. Consequently, if combustibles are present, the oxygen concentration in the sample gas will decrease, thereby causing an error in measurement. This limitation reduces the possibility of applying such oxygen detectors for the measurement of oxygen at sub-ppm levels.

Some versions of this design are available as transmitters, and others are marketed with integral indicators for both portable and permanent installations. These analyzers are available with very wide ranges. An analyzer scale might have graduations between 1 and 200,000 ppm or might cover a range of 0.5 to 100%.

© 2003 by Béla Lipták

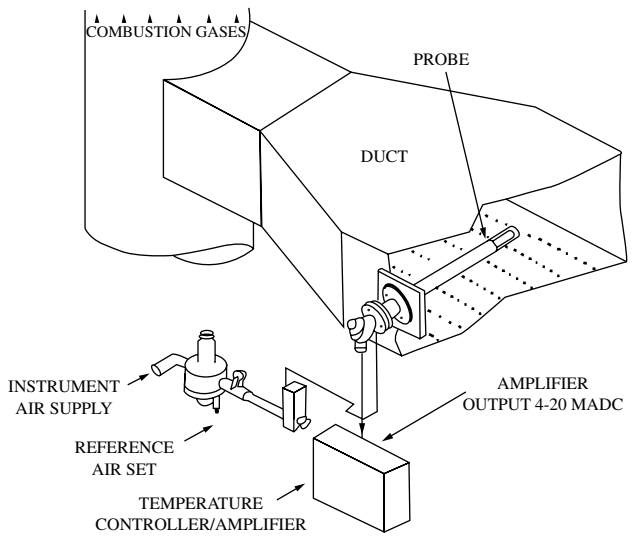

FIG. 8.42h
In-leakage through the duct joints and operating temperature must both be considered in selecting the location for installing the probe.

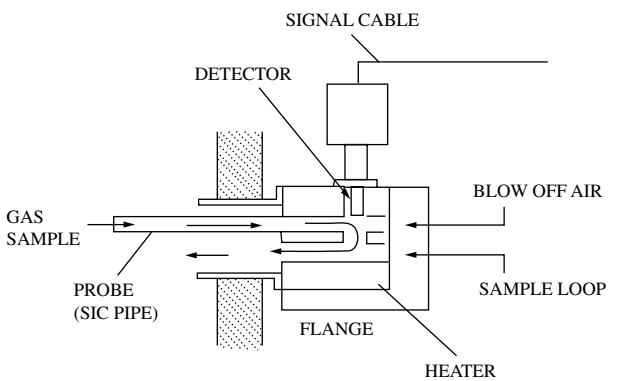

FIG. 8.42i
Self-cleaning high-temperature probe allows for use at operating temperatures up to 2990°F (1593°C), due to built-in temperature-controlled cooler.

Self-Diagnostics and Self-Cleaning Zirconium oxide stack probe analyzers are available with features of in-place calibration and self-diagnostics. Some designs can be serviced without removing the probe from the stack.

Probes are available in lengths of 1.5, 3, 6, 9, and 12 ft (0.5, 1, 2, 3, and 4 m) and should be inserted to 40 to 50% of duct diameter to reach the most representative area. In some designs, the zirconium oxide sensing element is located at the tip of the probe (Figure 8.42h). In that case, the installation must be made at a location where the operating temperature is under 1472°F (800°C); otherwise, the sensor could not be maintained at its constant temperature of 1472°F (800°C).

In other designs, the sensing element is located outside the duct, and aspirators are used to bring the samples to it. These designs can be utilized for samples with higher operating temperatures, because the gases can be cooled as they are brought to the sensor (Figure 8.42i).

Because ductwork is likely to leak, and because combustion processes are operated under vacuum, the farther the sample point is from the burner, the larger is the potential for measurement error caused by oxygen in-leakage. Therefore, zirconium oxide probes should be installed as close to the burner as their temperature limitation allows.

Other limitations of this sensor include its relatively short life (1 to 2 years) and its relatively high replacement cost. Sensor failure can be caused by shorting out the cell, which results in the diffusion of the platinum electrodes through the zirconium oxide layer. As the sensor ages, it also becomes more difficult to calibrate it. For these reasons, these analyzers are not recommended for trace oxygen measurement in the ppm range. Their primary application is in measuring the percentage of excess oxygen in combustion or steel-producing blast furnace processes.

High-Temperature Current-Mode Oxygen Detectors

In this detector, a zirconium oxide cell to which a small excitation has been applied has a cavity in which it has reduced the oxygen partial pressure to near zero. As oxygen diffuses into the cavity and is pumped out by cell action, positive current flow is generated in the excitation circuit. The output is in direct proportion to the oxygen content of the sample (Figure 8.42j).

The cell can be used with samples of high sulfur dioxide content and can operate at temperatures of up to 2880°F (1582°C).

Galvanic Detectors

Similar to the high-temperature solid metal oxide fuel cell O_2 detectors, galvanic-type O_2 detectors consist of a cathode, an anode, and an electrolyte. The principle of operation of

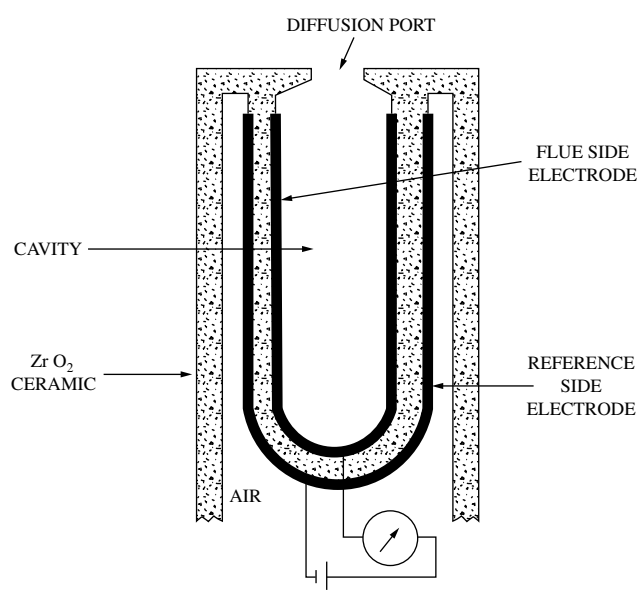

FIG. 8.42j
High-temperature diffusion-limited current-mode cell.

© 2003 by Béla Lipták

the galvanic-type O_2 detectors will be described in more detail in Section 8.43.

The sensitivity of these detectors is determined by their construction and by the choice of sensing cathodes. These analyzers are used for a variety of applications from ppm-level measurements to breathing air applications (20 to 25%).

Material technology advances have enabled manufactures to develop fuel cells that are made of a variety of polymeric and composite materials. Galvanic detectors can be made very small and can operate at very low voltage and current levels. Consequently, they are extensively used for intrinsically safe and portable (even pocket-sized) applications.

Capillary Systems In addition to sample introduction through the traditional membrane, some fuel cell designs utilize a capillary system to introduce the sample. Like most changes, these have advantages and disadvantages. For example, the capillary systems adjust more quickly to pressure and concentration changes but are also more prone to problems caused by the presence of mists and condensables.

In contrast, the membrane designs are less responsive to pressure changes and fast concentration changes and are more prone to problems caused by coating with dusts and powders. The capillary designs therefore offer us an additional option to meet application requirements. Several manufactures offer both capillary and membrane systems.

Detector Design The O_2 detectors that employ smooth metal cathodes can achieve sensitivity for gaseous oxygen to sub-ppm levels with an excellent signal-to-noise ratio. However, sensitivity for gaseous oxygen in the sub-ppb level is achieved by using a high surface area, metal-catalyzed gas diffusion electrode as the O_2-sensing cathode. The high surface area metal-catalyzed gas diffusion electrode consists of a porous hydrophobic electronically conductive Teflon®-carbon backing layer bonded to a thin layer of high surface area metal catalyst dispersed on a carbon support.

This type of electrode provides an effective surface area of up to 600 times the geometric area of the electrode, thus generating high signal output per unit O_2 concentration.

A typical galvanic O_2 detector utilizing a high surface area metal-catalyzed gas diffusion electrode with a sensitivity for gaseous oxygen of 1 ppb is illustrated in Figure 8.42k. The main body of the detector is made of a polymeric material and generally has a U-shaped configuration that contains electrolyte, an anode, and a thermistor. The cathode is mounted on one side of the detector wall.

A stainless steel plate with gas inlet and outlet tubes is attached to the same wall, with an O-ring between the plate and the detectors wall. The top of the detector is sealed with a stainless steel plate and an O-ring to eliminate the exposure of inner components to ambient air. This place also contains a port to fill the detector with electrolyte or charge the detector with water for continuous operation. The O_2 dissolved in the electrolyte is removed by bubbling oxygen-free gas through the porous frit at the bottom of the detector to minimize interference during analysis.

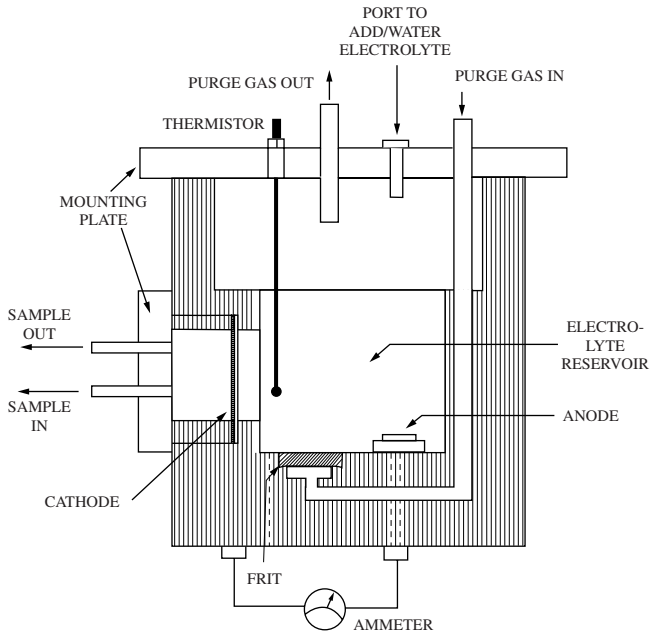

FIG. 8.42k
Electrochemical oxygen detectors utilizing high-surface-area metal-catalyzed gas diffusion electrode as the oxygen-sensing cathode. (Courtesy of Teledyne Analytical Instruments.)

The gas to be analyzed enters the cathode cavity via an inlet tube and then leaves via the outlet tube. During this process, it diffuses through the porous backing layer, reaches the catalyst surface exposed to the electrolyte, and immediately reacts, generating an electrical signal proportional to the partial pressure of O_2 in the gas mixture. Such detectors generally require temperature and gas flow rate compensation.

Advantages and Limitations A significant advantage of this type of O_2 detector is the reduced susceptibility to contamination of the sensing element by particulates in the sample gas. This is because particulates cannot enter the main cell body. The sensing element allows the diffusion of gases only through the back surface of the electrode to the catalyst surface exposed to the electrolyte. Analyzers utilizing such O_2 detectors are useful for long-term on-line operations.

The galvanic sensor is insensitive to shock and vibration but might read low as a result of a loss of sensitivity from aging. Therefore, it might need periodic recalibration. Also, if exposed to large concentrations of oxygen, the sensor can take a long time to recover from the *oxygen shock*.

Its applications include such things as ppb trace measurements to validate semiconductor quality gases used in potentially hazardous or explosives atmospheres, food-processing and storage, and more traditional percentage level measurements of stack gases and breathing air. It is not suitable for most high-temperature applications, as galvanic sensors tend to dry out the electrolyte and accelerate cell aging.

© 2003 by Béla Lipták

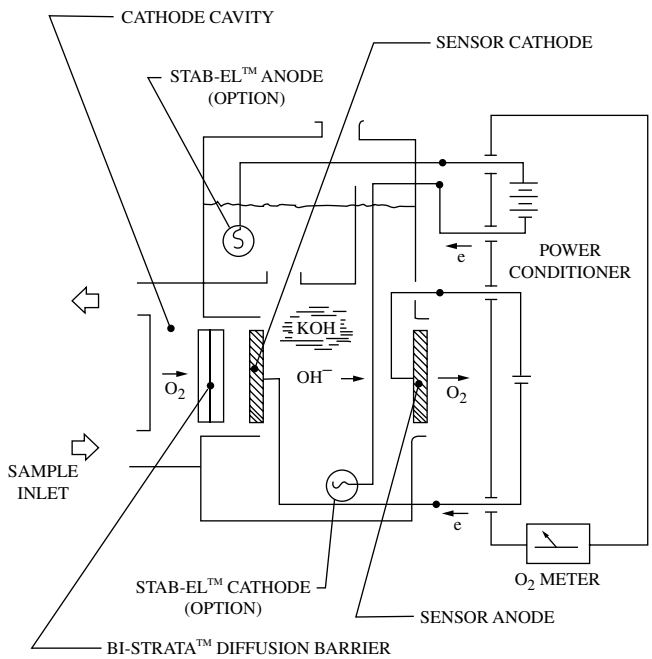

FIG. 8.42l
The coulometric electrochemical oxygen analyzer. (Courtesy of Delta F Corp.)

Coulometric Sensor

In the coulometric sensor, the sample gas diffuses through a diffusion barrier to the cathode of the electrochemical cell, where it is reduced to hydroxyl ions. Because of the conductivity of the potassium hydroxide electrolyte, the ions migrate to the anode, where they are oxidized back to oxygen. An external voltage drives this reaction, which results in a cell current that is proportional to the oxygen concentration in the gas sample (Figure 8.42l).

A main advantage of this design is its nondepleting nature, as neither electrode undergoes a chemical change during measurement. On the other hand, the effective area of the electrodes can change with time as a result of contaminant deposition on the electrodes. Therefore, the sensor could require periodic recalibration and eventual replacement.

Furthermore, this sensor could also be subjected to oxygen shock similar to galvanic-type sensors, which use a gas diffusion barrier to control the amount of oxygen that enters the sensor. This sensor is suited for ppb, ppm, and percentage measurements up to 25%. Its areas of application are similar to those of the galvanic sensor.

Polarographic Sensor

The polarographic cell is shown in the next section (Figure 8.43b). It consists of a sensing electrode (cathode), a reference electrode (anode), and an electrolyte, which is usually potassium chloride. The cathode is separated from the sample gas by a permeable membrane that permits the diffusion of oxygen through the electrolyte onto the sensing surface of the cathode. A voltage is applied between the two electrodes, causing the oxygen to be electrochemically reduced and producing an ionic current that is linear with the oxygen content of the sample.

This sensor is rugged and is insensitive to position and sample flow-rate variations. On the other hand, it is slow to respond, because of the time required for the oxygen to diffuse through the membrane. It also requires pressure and temperature compensation and periodic (about yearly) replacement, as both the anode and the electrolyte are consumed during operation. This sensor is seldom used on gas services; its most common application is in dissolved oxygen measurement in liquids (Section 8.43).

SPECTROSCOPIC OXYGEN DETECTION

In this handbook, the spectroscopic techniques are discussed in depth in Sections 8.27, 8.29, 8.40, and 8.61. They will be discussed here only briefly.

It might seem like overkill to consider using a spectrophotometer to measure oxygen when there are so many simpler, less expensive and effective ways to detect it. On the other hand, one might need to monitor a process for more than just oxygen, and it might be an advantage to monitor multiple components simultaneously. On yet another hand, the use of the same analyzer for multiple-component measurements also increases the consequences of instrument failure. Therefore, critical measurements always should be made by dedicated instruments, and the only reason why spectroscopy is even being mentioned here is that it is being used increasingly in applications where oxygen-specific analyzers were used in the past.

Mass Spectroscopy

Mass spectroscopy is used to monitor oxygen in a number of applications, including semiconductors, fermentation, pharmaceuticals, and other specialized areas. This instrument ionizes the sample and separates the ions according to their mass. In these applications, mass spectrometers are sometimes called *residual gas analyzers* because of the way they are used. Mass spectrometers (Section 8.29) are used when the determination (qualitative and quantitative) of more than one component is required in the sample. The application of this technique for the measurement of oxygen is in no way unique or special. The same techniques that are used for most other gases are also utilized for oxygen.

Near Infrared Spectroscopy

Many gas concentrations can be measured by monitoring their ability to absorb light in the infrared region. Near infrared (NIR) spectroscopy (Section 8.27) has been marketed for stack monitoring and other gas monitoring applications that include an oxygen measurement.

© 2003 by Béla Lipták

For a molecule to absorb infrared light and be measured in the infrared region, traditional thinking leads one to believe that it must have an electric dipole moment with which the IR radiation can interact. This typically requires a molecule that is made up of atoms in a structure that has generated an unbalanced electric field. Homonuclear molecules such as H_2, O_2, and N_2 contain two identical atoms and do not have a dipole moment. For this reason, they have long been thought of as being invisible in the IR spectrum.

For example, HCl has a hydrogen and a chlorine atom and is bound in a way that results in the chlorine being more electronegative than the hydrogen. The resulting molecule has an electrical dipole moment with which IR radiation can interact easily. By contrast, most homonuclear molecules absorb radiation only in the ultraviolet region of the spectrum. Molecular oxygen is one of the few exceptions.

The detection of molecular oxygen by the NIR spectroscopic technique involves a measurement that is often described as "a forbidden transition." Many molecules can absorb radiation (energy) and enter a temporary excited or radiative state. Usually, they quickly release this extra energy in the form of radiation. These levels of excitation typically occur within the bounds of traditional quantum rules, and the released energy (reradiation) is typically described as fluorescence. The lifetime of these excited states is a small fraction of a second in duration.

Sometimes, when the reradiation is not in compliance with the more traditional quantum rules, phosphorescence instead of florescence can be obtained, and the reradiation can experience large time delays from the initial absorption. In the case of molecular oxygen, there is such a transition that can be monitored in the NIR region of the spectrum near 760 nm. It is described as a highly forbidden singlet delta state of oxygen. The fact that the state lies close to the oxygen molecular ground state means that oxygen can be measured in this "forbidden region" by NIR methods such as tunable diode laser absorption spectroscopy (TDLAS).

TDLAS Designs For a more detailed discussion of TDLAS, see Section 8.40. TDLAS that, in the NIR region, is successfully used to make oxygen measurements is called *single line absorption spectroscopy*, in which a diode laser is scanned across a chosen absorption line. The selection and application of the O_2 spectral line is proprietary to most vendors, but it is usually one of the oxygen lines around 760 nm (Figure 8.42m).

Suppliers employ wavelength modulation to enhance sensitivity. The laser source wavelength is modulated slightly as the absorption line is scanned. The resulting output signal is mathematically massaged (i.e., decomposed into frequency components; usually, the second harmonic is used to generate the measurement). The result is an oxygen measurement by a spectroscopic technique that previously was not considered possible. It has been made possible only by advancements in laser technology, computing, and optics.

These analyzers are being used in incinerator stacks and other applications where samples are typically dirty or corrosive, and if high detection speeds are required. The incorporation of fiber optic technology provided a high degree of installation flexibility. Figures 8.42n and 8.42o depict several of the installation layouts and sampling configurations that are in use.

Although neither NIR nor mass spectroscopic techniques will probably ever be used to measure oxygen only, they can be justified to simultaneously measure oxygen and a multiplicity of other components in a sample.

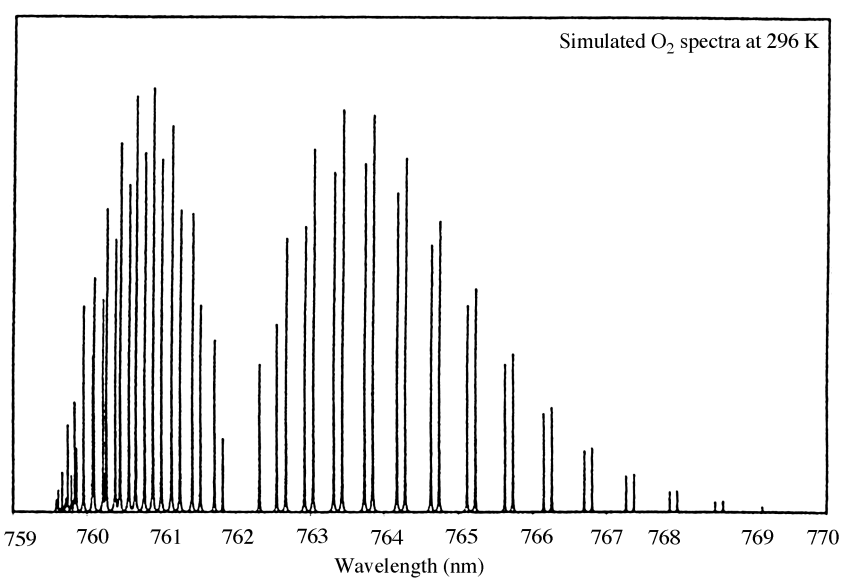

FIG. 8.42m
Simulated NIR O_2 Spectra. (Courtesy of Unisearch Associates Inc.)

© 2003 by Béla Lipták

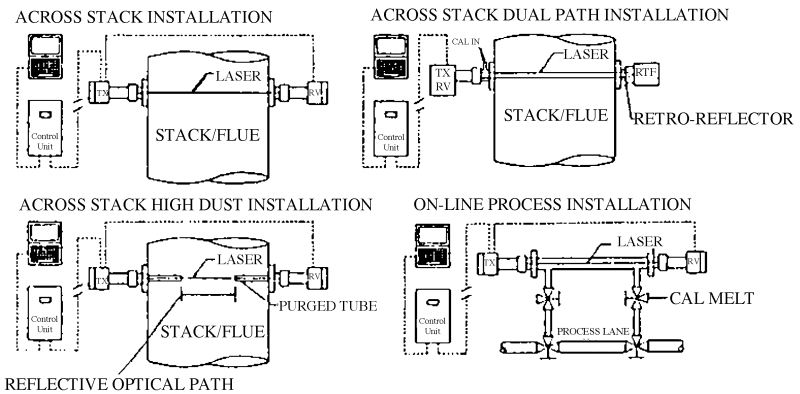

FIG. 8.42n
NIR Tunable Diode Laser Instrument Layouts. (Courtesy of Analytical Specialties for Norsk Elektro Optikk A/S.)

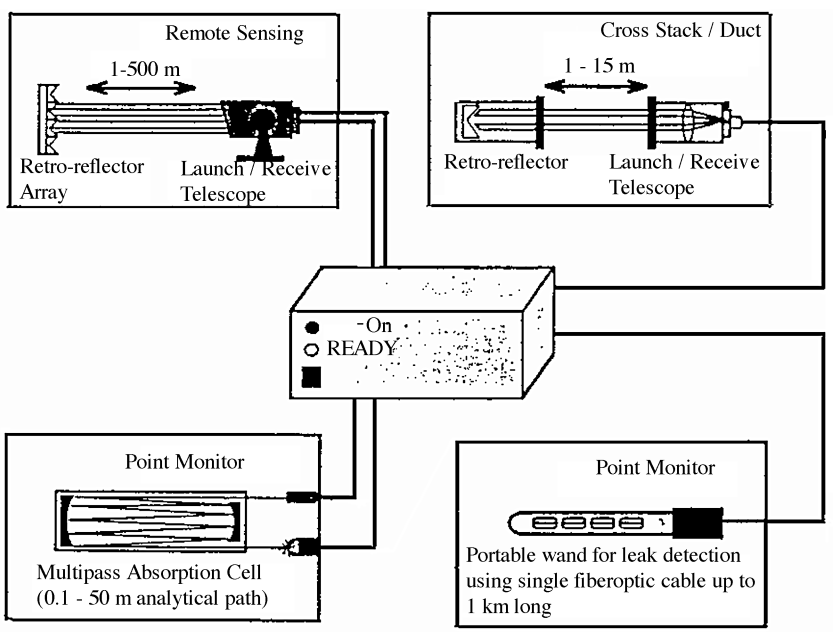

FIG. 8.42o
Examples of Fiber Enabled NIR Sampling Configurations. (Courtesy of Unisearch Associates Inc.)

OTHER OXYGEN DETECTION METHODS

Several additional methods of oxygen detection can be considered, especially if sample components other than oxygen are of interest. For example, gas chromatography (Section 8.12) can be valuable for atmospheric analysis and to check the levels of oxygen, hydrogen, carbon monoxide and dioxide, organic solvents, Freon, methane, and others.

Chemical analyzers of the manual Orsat type are also available for a large variety of ranges from 0–20% to 100% oxygen. Orsat gas analyzers have been designed for specific applications, such as combustion and blast furnace testing, and for checking the purity of medical and industrial oxygen.

Reference

1. *Guide to the Selection of Oxygen Analyzers,* Delta F Corp., Woburn, MA.

Bibliography

Buonauito, R. P., Oxygen measurements in the presence of acid gases, *Meas. Control,* September 1984.

Fusaro, D., Environment, energy concerns resuscitate oxygen analyzers, *Control,* February 1992.

Gallagher, J. P., Oxygen analyzers, *Meas. Data,* May–June 1975.

International Standard IEC 61207–3, Gas Analyzers–Expression of Performance–Part 3, Paramagnetic Oxygen Analyzers, IEC, Geneva, 1998.

Kolmer, J. W. and Neuberger, E. D., Programmed O_2 set point optimizes combustion control, *Instrum. Control Syst.*, 33–38, December 1977.

© 2003 by Béla Lipták

Kraf, D., Establishing cost/benefit and payback for a flue gas analyzer, *Pollution Eng.,* 44–46, April 1979.

Meyer, E., Magnetic oxygen analyzer, *Meas. Control,* June 1993.

Nelson, R. I., *New Developments in Closed Loop Combustion Control Using Flue Gas Analysis*, ISA, Research Triangle Park, NC, 1980.

Neuberger, E. D., Reliable oxygen measurements reduces process costs, *Westinghouse Eng.,* January 1975.

Rayburn, S., *The Foundations of Laboratory Safety,* Springer-Verlag, New York, 1990.

Razaq, M., A New Sensor and a Microprocessor-Based Analyzer for Monitoring Low Parts-Per-Billion Oxygen Contamination in High Purity Process Gases, ISN Preprint 91–0535.

Sayles, D. A., Combustion control strategies for fuel conservation, *Oil, Gas & Petrochem. Equip.,* February 1981.

Scruggs, W. E. and May, D. L., Instrument for controlling energy costs, *Proc. ISA Conference,* Houston, TX, October 1973.

Sherman, R. E. and Rhodes, L. J., *Analytical Instrumentation: Practical Guides for Measurement and Control,* ISA, Research Triangle Park, NC, 1996.

West, H. and Zinn, C. D., Impact of OSHA/EPA process safety regulations on controls systems, *Proc. 1992 ISA Conference,* Houston, TX, October 1992.

White, L. T., *Hazardous Gas Monitoring,* William Andrew Publishing, Norwich, NY, 2000.

© 2003 by Béla Lipták

8.43 Oxygen in Liquids (Dissolved Oxygen)

R. K. KAMINSKI (1969, 1982) **B. G. LIPTÁK, G. J. RORECH** (1995)
M. P. DZIEWATKOSKI (2003)

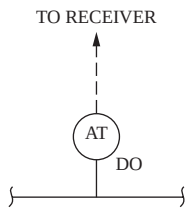

Flow Sheet Symbol

Types:	A. Polarographic B. Galvanic C. Coulometric D. Multiple-anode E. Thallium F. Fluorescence
Operating Pressure:	Up to 50 PSIG (3.5 barg) or submersion depths of up 25 ft (8.3 m)
Operating Temperature Range:	32 to 122°F (0 to 50°C); special designs up to 175°F (80°C)
Flow Velocity at Sensing Membrane:	Preferably in excess of 1 ft/sec (0.3 m/s); some can operate down to 0.2 ft/sec (0.06 m/s)
Materials of Construction:	Typical material for sensor housing: PVC or stainless steel; possible electrode materials: platinum, gold, silver, zinc, lead, cadmium, and copper; for membrane assembly, ABS plastic or stainless steel mesh-reinforced silicone and/or Teflon® membrane
Speed of Response:	90% in 30 sec; 98% in 60 sec
Ranges:	Common ranges are 0 to 5, 0 to 10, 0 to 15, and 0 to 20 ppm; special units are available with ranges up to 0 to 150 ppm or down to the 0 to 20 ppb range used on boiler feedwater applications. Systems can also be calibrated in partial pressure units.
Inaccuracy:	Generally, ±1 to ±2% of span; industrial transmitter errors are generally within 0.02 ppm over a 0 to 20 ppm range. Thallium cells are available with a 0 to 10 ppb range and can read the dissolved oxygen (DO) within an error of 0.5 ppb.
Costs:	Portable, battery-operated, 1.5 to 2% FS units that also read temperature cost from $500 to $2000; replacement probes range from $250 to $1000; 1% FS, microprocessor-based portable benchtop units for laboratory or plant service cost from $1000 to $2000; industrial-quality (0.02 ppm error limit) DO probe and 4 to 20 mA transmitter range from $2000 to $3500; cleaning assemblies cost from $500 to $2000.
Partial List of Suppliers:	ABB Inc. Instrumentation (www.abb.com) ABB TBI Bailey (www.tbi-bailey.com) Analytical Technology, Inc. (www.analyticaltechnology.com) Automated Aquarium (www.automatedaquariums.com) Broadley-James Corporation (www.broadleyjames. com) Endress + Hauser Inc. (endress.com) Extech Instruments (www.extech.com) Global Water Instr. Inc. (www.globalw.com) Great Lakes Instruments Inc. (www.gliint.com) Greenspan Technology Pty Ltd. (www.greenspan.com.au) Hanna Instruments (www.hannainst.com)

© 2003 by Béla Lipták

Honeywell Inc. (www.honeywell.com)
Horiba Ltd. (www.horiba.com)
IC Controls Ltd. (www.iccontrols.com)
Innovative Sensors Inc. (www.innovativesensors.com)
Invensys-Foxboro (www.foxboro.com)
Lazar Research Laboratories Inc. (www.lazarlab.com)
Mettler Toledo Ingold Inc. (www.mt.com)
Ocean Optics Inc. (www.oceanoptics.com)
Orbisphere Laboratories (www.orbisphere.com)
Rosemount Analytical, Liquid Division (www.emersonprocess.com)
Royce Technologies (www.royceinst.com)
Sensorex (www.sensorex.com)
Techne Inc. (www.techneusa.com)
Teledyne Analytical Instruments (www.teledyne-ai.com)
Waltron Ltd. (www.waltronltd.com)
Uniprobe Instruments Ltd. (www.uniprobe.co.uk)
Van London Company Inc. (www.vanlondon.com)
Yokogawa Corp. of America (www.yca.com)
YSI Inc. (www.ysi.com)

INTRODUCTION

Section 8.42 was devoted to the discussion of oxygen analyzers in gas. This section deals with oxygen analysis in liquids. The distinctions between the analyzers used for these two services are not clear cut. The different electrochemical cell-type sensors (e.g., polarographic, galvanic, coulometric) can be used for both applications, as discussed in the previous section. Therefore, their treatment is somewhat shortened in this section. The most commonly used dissolved oxygen (DO) probe is the polarographic type.

Probe Cleaners and Newer Sensors

Similarly, probe cleaners have already been discussed in Sections 8.1, 8.2, 8.28, 8.33, 8.41 and will also be discussed in Section 8.48 in connection with pH probes. Therefore, their treatment here will also be abbreviated, although Figure 8.43a does describe a vibratory paddle-type probe cleaner. This unit cleans the membrane surface by a back-and-forth motion close to the surface. The agitator paddle is coated with a biological growth-inhibiting substance that minimizes the biological growth on the membrane surface.

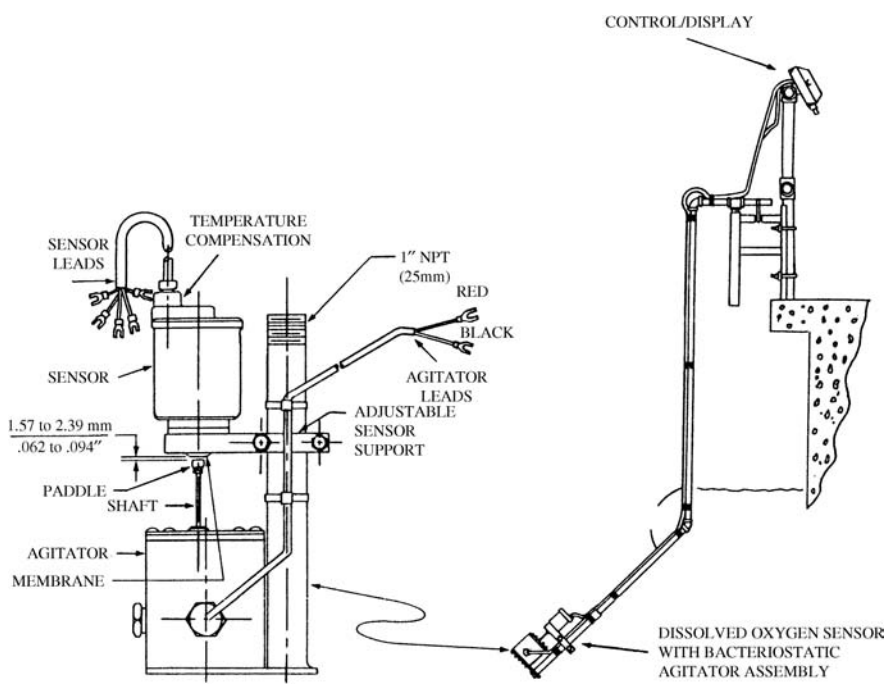

FIG. 8.43a
Cleaner assembly for keeping the membrane surface of a dissolved-oxygen probe free of buildup or biological growths.

© 2003 by Béla Lipták

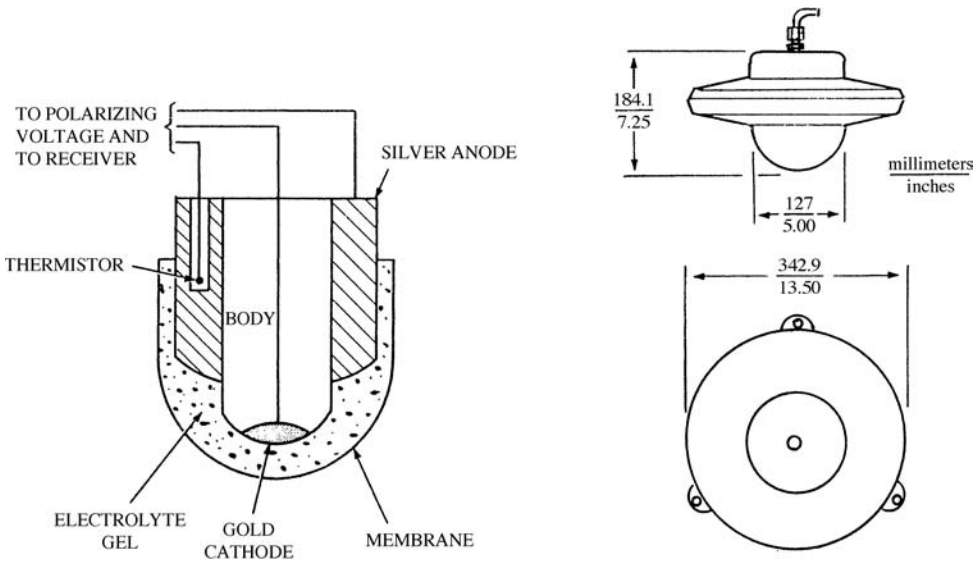

FIG. 8.43b
Probe-type polarographic cell oxygen detector and flotation collar in which it can be mounted.

Galvanic and polarographic sensors continue to dominate the dissolved oxygen measurement applications for both on-line and off-line analysis. However, significant advances have been made with the introduction of equilibrium-state voltametric and fluorescence-based probes. These have the advantage of analyte sensitivities, which are relatively independent of membrane coating, and, since they consume little or no analyte as a result of the measurement process, they are able to work in processes where there is little or no flow past the face of the sensor.

All oxygen detectors used for gaseous samples can also measure the oxygen concentration in liquid streams if the oxygen is first removed from the liquid. This approach has the major advantage that only a clean gas mixture will contact the oxygen detector.

POLAROGRAPHIC CELL

The basic polarographic cell is illustrated in Figure 8.43b. It is very similar to the galvanic cell discussed in the next paragraph. However, the polarographic cell has *two* noble-metal electrodes and requires a polarizing voltage to reduce the oxygen.

The dissolved oxygen in the sample diffuses through the membrane into the electrolyte, which usually is an aqueous KCl solution. If there is a constant polarizing voltage (usually 0.8 V) across the electrodes, the oxygen is reduced at the cathode, and the resulting current flow is proportional to the oxygen content of the electrolyte. This current flow is detected as an indication of oxygen content. The oxidation-reduction reactions, in the case of a gold-silver cell and with KCl electrolyte, are as follows:

At the gold cathode,

$$O_2 + 2H_2O + 4 \text{ electrons} \rightarrow 4(OH^-) \qquad \textbf{8.43(1)}$$

and at the silver anode,

$$4Ag + 4(Cl^-) \rightarrow 4AgCl + 4 \text{ electrons} \qquad \textbf{8.43(2)}$$

A variety of designs are available to extend the working life of the cell to several months. These include a number of membrane and electrolyte reservoir designs in addition to the use of a larger silver anode. The silver chloride at the anode can be converted back to silver by reversing the polarizing voltage.

Sample Temperature and Flow

The polarographic cell, like galvanic cells, is affected by temperature. Therefore, it is necessary to either control the sample temperature or to provide temperature compensation to attain high-precision measurements. In case of DO measurement, high precision corresponds to ±1 to ±2% error. If the sample temperature is allowed to vary between 32 and 110°F (0 and 43°C), the measurement error in some designs will rise to approximately ±6%.

Both galvanic and polarographic cells require a minimum sample flow velocity. This is necessary to eliminate stagnant layers of sample over the membrane, which otherwise would interfere with the continuous transfer of oxygen into the cell. The higher sample velocities are also beneficial because of their scrubbing action. Some suppliers provide a combination cell that, for maximum cleaning effect, includes a sample pump that directs a 5 ft/sec (1.5 m/s) flow velocity against the membrane.

GALVANIC CELL

The operating theory of the dissolved oxygen galvanic cell is the same as that of the galvanic cell used for gaseous samples. With the exception of the considerations related to

© 2003 by Béla Lipták

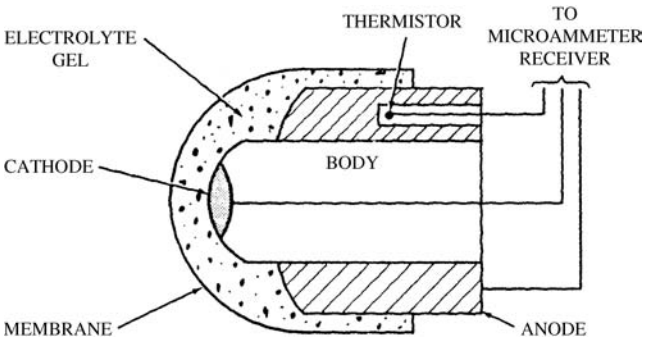

FIG. 8.43c
Probe-type galvanic cell oxygen detector.

the drying-out problem, all the design considerations are identical. The main difference is that most dissolved oxygen sensors are installed in dirty water, so they require special cleaners, agitators, and specialized sample systems.

The ranges of the galvanic cell dissolved oxygen analyzers can be as low as 0 to 20 ppb for applications such as the measurement of dissolved oxygen (DO) content of boiler feedwater.

Cell Designs

All galvanic cells consist of an electrolyte and two electrodes (Figure 8.43c). The oxygen content of the electrolyte is equalized with that of the sample. The reaction is spontaneous; no external voltage is applied. In this reaction, the cathode reduces the oxygen into hydroxide, thus releasing four electrons for each molecule of oxygen [Equation 8.43(3)]. These electrons cause a current flow through the electrolyte. The magnitude of the current flow is in proportion to the oxygen concentration in the electrolyte.

The most common electrode materials are gold, silver, copper, and lead, and the most frequently used electrolyte is potassium hydroxide (KOH). The cathode must be a noble metal (silver or gold) for the cathode potential to reduce molecular oxygen when the cell circuit is closed. A base metal is selected for the anode (lead, cadmium, copper, zinc, or silver) with good stability and without any tendency toward passivation. The electrolyte [KOH, potassium chloride (KCl), or potassium bicarbonate ($KHCO_3$)] is selected to minimize its dissolution of the anode when the cell is open.

In the case of a lead anode, the cell reactions can be expressed as follows:

$$\text{Cathode: } O_2 + 2H_2O + 4 \text{ electrons} \rightarrow 4(OH^-) \qquad \textbf{8.43(3)}$$

$$\text{Anode: } 2Pb \rightarrow 2(Pb^{++}) + 4 \text{ electrons} \qquad \textbf{8.43(4)}$$

The galvanic-cell designs are subject to various degrees of contamination by background gases in the process stream. As a very general rule, the following background gases can be considered harmless: argon, butane, carbon monoxide, ethane, ethylene, helium, hydrogen, methane, nitrogen, and propane. However, the following gases are likely to contaminate the cell: chlorine and other halogens, high concentrations of carbon dioxide, hydrogen sulfide, and sulfur dioxide.

Special and Flow-Through Cells

Special cells have been developed to minimize the effect of the background gases. When an acid gas (such as CO_2) is present that would neutralize a potassium hydroxide electrolyte in the background, a potassium bicarbonate electrolyte can be considered. Special cells are also available for the measurement of oxygen in acetylene and fuel gases.

In flow-through cell designs, sampling systems are usually required to bring the process stream to the analyzer and to filter it, scrub it with caustic, or treat it in other ways as preparation for the measurement. The probe-type membrane design does not require a sampling system if it can be located in a representative process area where the pressure, temperature, and velocity of the process stream are compatible with the cell's mechanical and chemical design.

Probe Design

In this design (Figure 9.43c), the electrodes are wetted by an electrolytic solution that is retained by a membrane (usually Teflon) that acts as a selective diffusion layer, allowing oxygen to diffuse into the electrolyte solution while keeping foreign matter out. The sensor is usually mounted in a thermostatically controlled housing, and a thermistor is provided to compensate for minor temperature variations.

The ion current established in the electrolyte can be expressed by the following equation:

$$i_x = \frac{nFAPmCs}{L} \qquad \textbf{8.43(5)}$$

where

- i_x = the ion current
- n = the number of electrons involved in the electrode reaction
- A = the area of the cathode surface
- F = Faraday's constant
- Pm = the permeability coefficient of the membrane
- L = the thickness of the membrane
- Cs = oxygen concentration

Equation 8.43(5) shows the relationship among the cell components. The Nernst equation [Equation 8.43(1)] also applies to the galvanic cell and explains why electrode potentials are a function of the absolute temperature. In addition, the ionic activity also varies with temperature, thus causing additional temperature sensitivity.

The characteristics of the membrane are critical to performance. The ideal membrane would be inert, stable, strong, permeable to oxygen, and impermeable to water molecules or other ions. In most cases, a compromise solution is accepted.

© 2003 by Béla Lipták

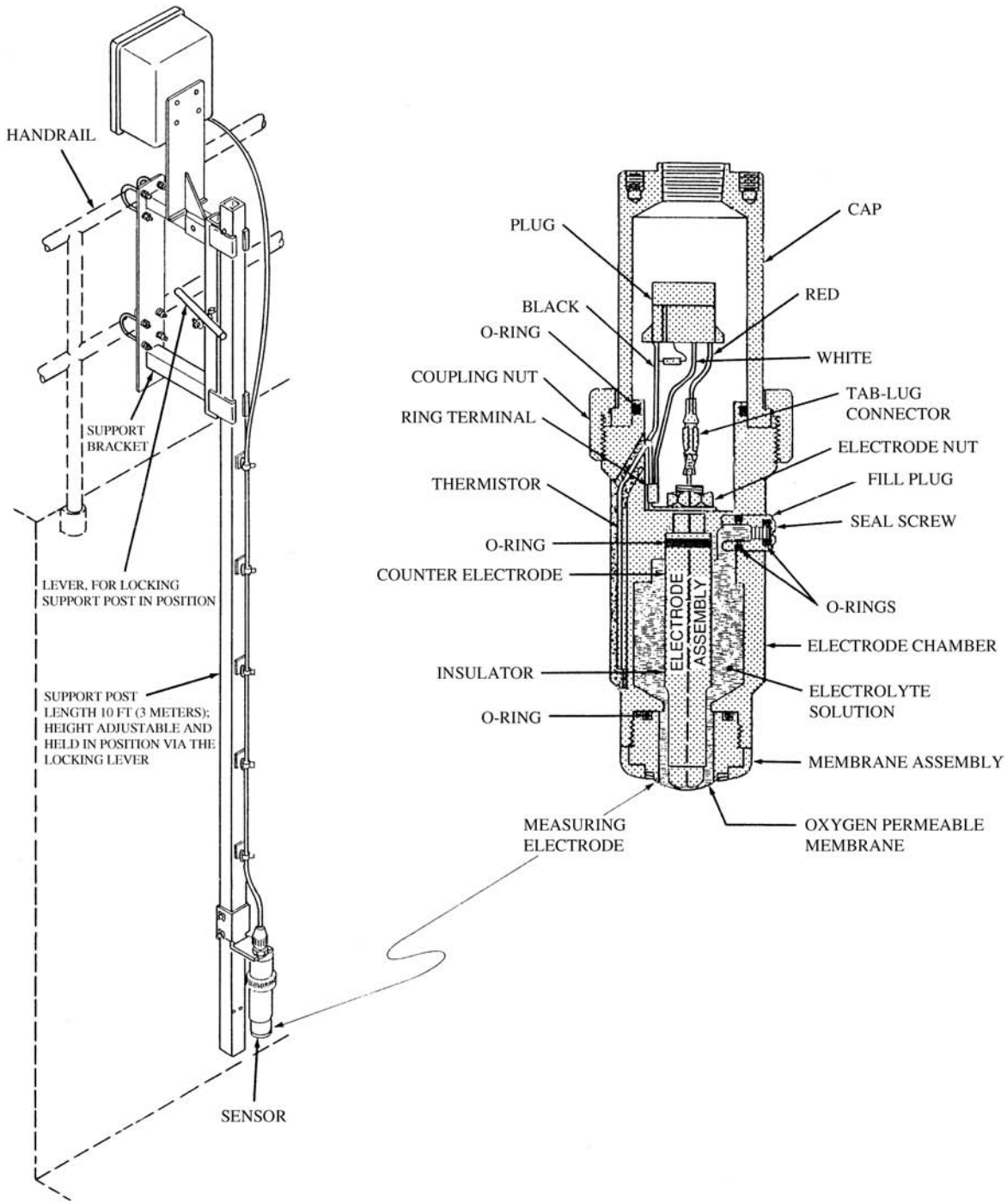

FIG. 8.43d
The design of a galvanic DO cell and its rail mounting installation. (Courtesy of ABB Inc., formerly Fisher & Porter Co.)

Installation The design of a galvanic (amperometric) cell with gold-copper electrodes designed for rail mounting is shown in Figure 8.43d. The maintenance requirements of this design have been reduced by providing an electrolyte supply that lasts for two to three years and by making the membrane assembly easily replaceable. These analyzer systems are available in weatherproof housing, with 1% of span inaccuracy and with 4 to 20 mA transmitter output.

Flow-Through Design

In the flow-through cells, the process sample stream is bubbled through the electrolyte. The oxygen concentration of the electrolyte is therefore in equilibrium with the sample's

© 2003 by Béla Lipták

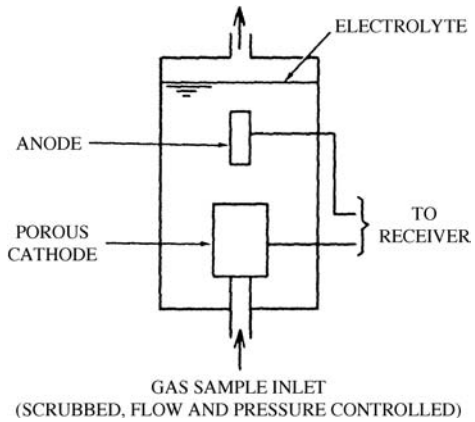

FIG. 8.43e
Flow-through trace oxygen analyzer cell.

oxygen content, and the resulting ion current between the electrodes is representative of this concentration.

In some trace analyzer designs, the cathode is made out of a porous metal, and the sample gas passes through this electrode, immersed in the electrolyte. Oxygen reduction tends to be complete within the pores of this electrode (Figure 8.43e).

These types of cells are usually provided with sampling consisting of (but not limited to) filtering and scrubbing components and flow, pressure, and temperature regulators.

COULOMETRIC SENSOR

In the coulometric sensor, the sample gas diffuses through a diffusion barrier to the cathode of the electrochemical cell, where it is reduced to hydroxyl ions. Due to the conductivity of the potassium hydroxide electrolyte, the ions migrate to the anode, where they are oxidized back to oxygen. An external voltage drives this reaction, which results in a cell current that is proportional to the oxygen concentration in the gas sample.

A main advantage of this design is its nondepleting nature, as neither electrode undergoes a chemical change during measurement. Also, there is no need for periodic sensor replacement, and the unit is not subject to *oxygen shock*. This sensor is suited for ppb, ppm, and percentage measurements up to 25%. The areas of application of the coulometric analyzer are similar to those of the galvanic sensor.

MULTIPLE-ANODE DETECTOR

The multiple-anode detector (Figure 8.43f) has three electrodes. Two are interspaced (noted by + and – in the figure) and covered with electrolyte. Oxygen is consumed at many cathodes but is generated at many anodes.

$$2H_2O \rightarrow O_2 + 4H^+ + 4e^- \qquad \textbf{8.43(6)}$$

Because a balance exists in this cell, there is no net generation of products. A number of advantages are claimed

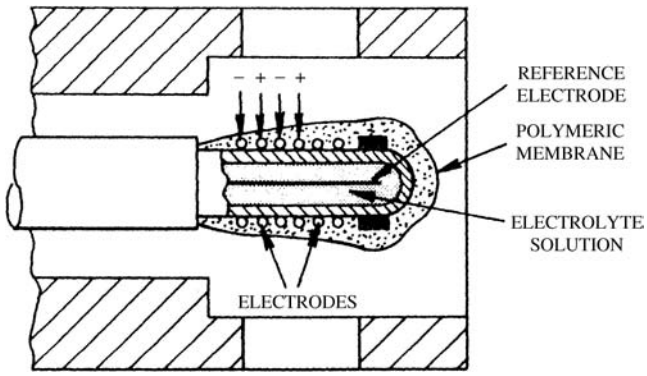

FIG. 8.43f
Multiple-anode oxygen detector.

for this technique. These include that fouling affects only the response time, there is no deterioration of electrodes, and membrane replacement is not required.

THALLIUM CELLS

Thallium cells are somewhat unique in their operating principle and cannot be classified into the category of either galvanic or polarographic cells. At the same time, they are of the electrochemical type. One thallium-electrode cell design is somewhat similar in appearance to the unit illustrated on Figure 8.43b except that it has no membrane or electrolyte. This cell has a thallium outer-ring electrode and an inner reference electrode. When oxygen contacts the thallium, the following reaction takes place:

$$4TI + O_2 + 2H_2O \rightarrow 4TI(OH) \rightarrow 4(TI^+) + 4(OH^-) \qquad \textbf{8.43(7)}$$

The potential developed by the cell is a function of the thallous ion concentration at the face of the electrode, and the ion concentration is in proportion to the concentration of dissolved oxygen.

Thallium Differential Conductivity Analyzer

Another cell involving the reaction between thallium and oxygen is the thallium differential conductivity analyzer. This sensor detects the amount of thallous hydroxide formed by the measurement of conductivity. The sample conductivity is sensed both before and after the reaction, and the difference in conductivities is detected as a measure of dissolved oxygen content.

To eliminate temperature gradient problems, the actual instrument has both a sample and a reference flow stream. They are maintained at the same rate, and they flow through a similar flow path. Due to the high sensitivity of this measurement, accuracies of ±0.5 ppb are obtained over the minimum range of 0 to 10 ppb. The response speed of this sensor is relatively slow; 95% of the response can be expected in about three minutes.

© 2003 by Béla Lipták

FLUORESCENCE-BASED SENSORS

A new class of dissolved oxygen sensors operates on the principle of fluorescence quenching. Some chemical compounds have the ability to absorb light of a particular wavelength and then to re-emit light at a different (longer) wavelength. The intensity of the emitted light can be diminished when another chemical compound interacts with the compound responsible for the fluorescence. Because its intensity is lower than expected, the emitted fluorescence intensity is said to be *quenched*. This phenomenon can be used for the measurement of oxygen.

Sensor Design and Operation

In this case, a compound containing ruthenium is immobilized in a gas-permeable matrix called a *sol-gel*. Sol-gels are very low-density, silica-based matrices suitable for immobilizing chemical compounds such as the ruthenium compound used in this measurement technique. Effectively, the sol-gel is equivalent to the membrane in a conventional DO sensor.

Using fiber optics, light from a light-emitting diode is transferred to the backside of the sol-gel coating. The emitted fluorescence is collected from the backside of the sol-gel with another optical fiber and its intensity is detected by a photodiode. A simplified sensor design is shown in Figure 8.43g. If no oxygen is present, the intensity of the emitted light will be at its maximum value. If oxygen is present, the fluorescence will be quenched, and the emitted intensity will decrease.

The ratio of the emitted intensity when no oxygen is present (Io) to the emitted intensity in the presence of oxygen (I) can be related to the oxygen partial pressure (which can be converted to concentration) through the Stern–Volmer equation below:

$$\frac{I_O}{I} = 1 + K(P_{O2}) \qquad \textbf{8.43(8)}$$

where

K = a temperature dependent constant
P_{O2} = the partial pressure of oxygen

This equation shows that, in the absence of oxygen, the ratio I_O/I will be 1.0 and that it will increase linearly as the oxygen concentration increases.

To determine the oxygen content of a solution, it is first necessary to determine I_O when the oxygen concentration is zero. Hence, calibration consists of a minimum of two points; one measurement is made in a zero-oxygen environment, and the other is at near normal oxygen concentrations where measurements are to be made.

The dynamic range for this sensor type is from single-digit ppb through 40 ppm. Response times are approximately 30 sec, and inaccuracy is typically 1% of the measurement range. The sensing element can be damaged by solutions having pH values greater than 10 and by solutions containing high levels of aggressive solvents such as aromatic compounds and ketones. The sol-gel membranes are available with a coating (such as silicone) to provide protection against abrasion.

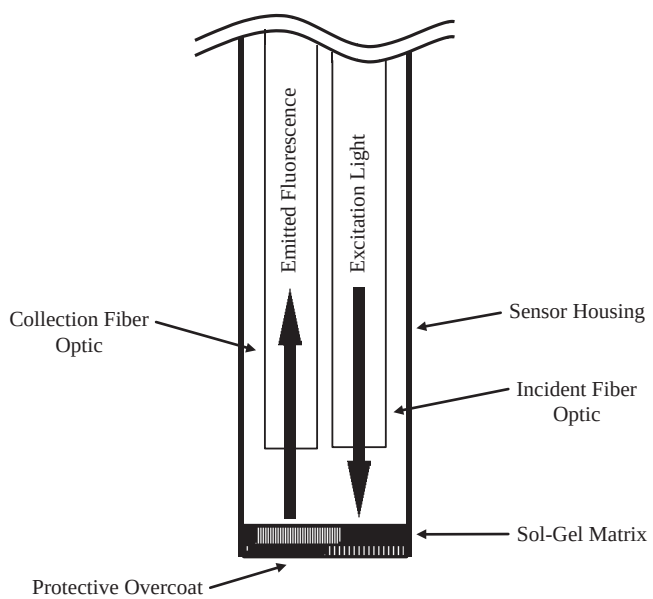

FIG. 8.43g
Simplified diagram of a fluorescence-based dissolved oxygen sensor.

OTHER DETECTION METHODS

Another method of dissolved oxygen detection involves wet-chemistry analyzers. These devices operate intermittently by taking a small sample and adding reagents to it. The reagents develop a color in the sample if a certain component is present. This technique can be applied to dissolved oxygen detection (in addition to many other applications) by colorimetrically determining the concentration of the unknown component.

OPERATIONAL CONSIDERATIONS FOR ALL SENSORS

For the purposes of the discussion that follows, it is assumed that oxygen is dissolved in ordinary water. For most applications, the sensors are actually inserted into more complex solutions. However, the major component is usually water and thus, for the sake of the discussion that follows, the physical and chemical properties of such a solution usually can be treated as pure water.

Dissolved oxygen sensors can also be used for measurements in solutions consisting primarily of organic solvents. In this case, one must be aware that the solubility characteristics of oxygen in such a solution can be very different from that in a solution consisting primarily of water. Therefore, the oxygen solubility algorithms preprogrammed into the transmitter for water may not accurately reflect the true oxygen concentration in a solvent.

© 2003 by Béla Lipták

Calibration Methods

Many dissolved oxygen systems are designed to operate over a very wide concentration range—for example, from 0 to 100 mg/l or up to 500% saturation. Calibration can be based on either one or two points. Additionally, calibration can be performed in air- or oxygen-saturated media or in air (or oxygen) that is saturated with water vapor. The method of calibration will have an influence on accuracy and is often dictated by the desired measurement range.

Given this, manufacturers may suggest different calibration schemes based on the level at which the determination is to be made. For example, if all measurements are to be made at concentrations greater than 0.5 mg/l, then a one-point calibration will usually suffice. (This is not true for fluorescence-based sensors, as was discussed earlier.) In this case, the intercept of the calibration plot is set to equal zero current at zero concentration. This assumption is often valid, given that the background current for most sensors is usually very small in comparison to the values being measured.

On the other hand, if measurements are to be made at levels below 0.5 mg/l, then one will want to set the low calibration point (the zero signal) in an oxygen-free medium and then set the second calibration point in a medium of higher (and known) oxygen content. This procedure will ensure greater accuracy at lower concentrations.

Special care must be observed when calibrating membrane-covered sensors that consume oxygen (e.g., polarographic or galvanic) in a zero-oxygen environment. For this case, the sensor must be exposed to the oxygen-free medium (and polarized) for approximately 1 hr prior to calibrating the zero point. Otherwise, residual oxygen in the electrolyte within the sensor will cause an erroneously high current measurement.

Temperature Compensation

Temperature is an important factor in dissolved oxygen measurements for two reasons. First, the solubility of oxygen in a liquid is temperature dependent and, second, the rate at which oxygen moves across the permeable membrane is also temperature dependent. The change in solubility is inversely proportional to solution temperature, as shown in Figure 8.43h(I). If the user is interested in oxygen concentration values, then a solution temperature change must reflect a

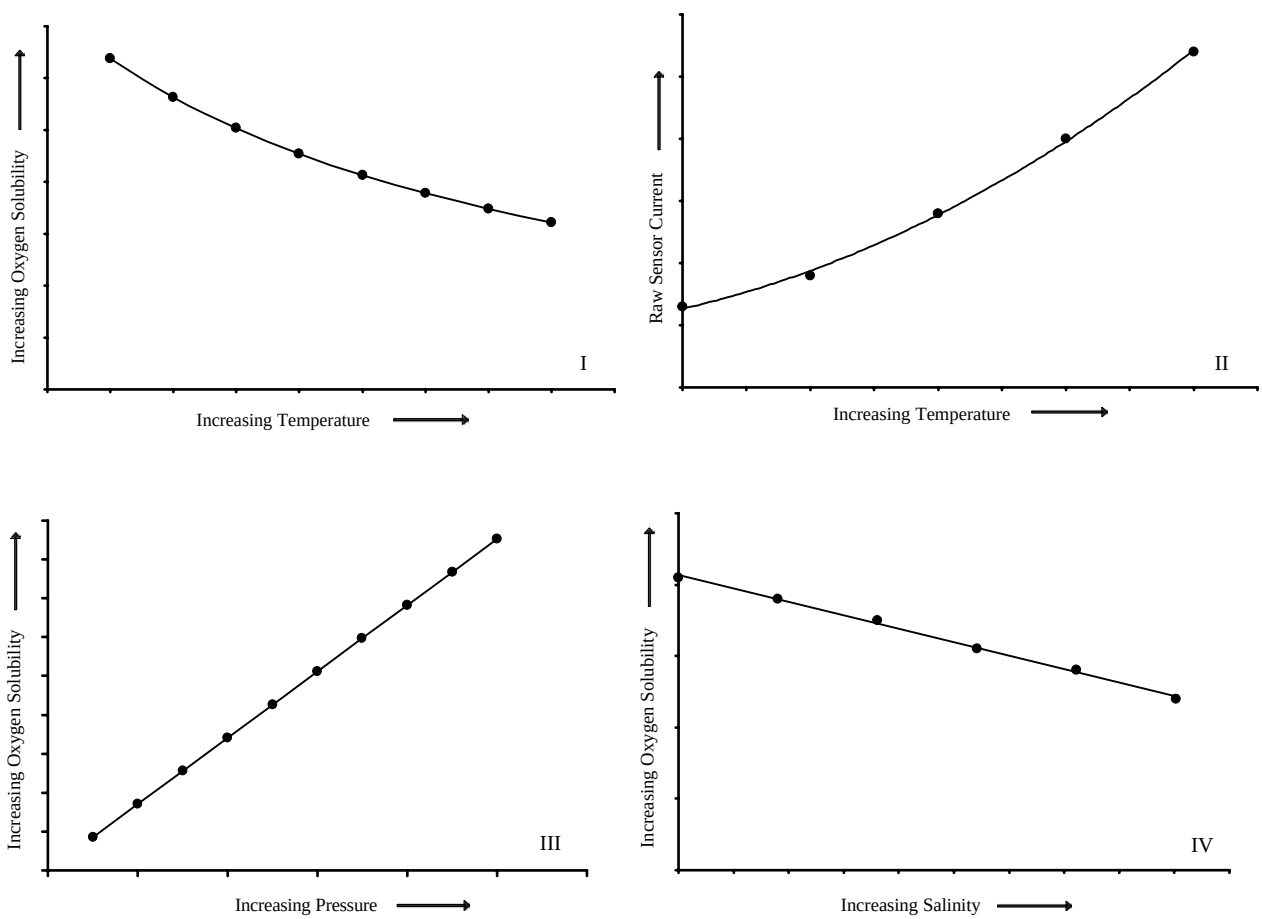

FIG 8.43h

Variation of (I) dissolved oxygen concentration with liquid temperature, (II) sensor current with temperature, (III) dissolved oxygen concentration with pressure (total pressure or oxygen partial pressure), and (IV) dissolved oxygen concentration with salinity. (Graphs generated from data tabulated in Hitchman, M. L., Measurement of Dissolved Oxygen, John Wiley & Sons, New York, 1978.)

© 2003 by Béla Lipták

change in oxygen concentration on the transmitter display. Practically all dissolved oxygen meters/transmitters employ an algorithm to determine oxygen concentration based on a solution temperature measurement.

Dissolved oxygen sensors are designed to operate under steady-state oxygen transport across the membrane. Ideally, the membrane permeability should never change after calibration. However, membrane permeability increases with increasing temperature. Hence, the sensor signal will increase with temperature, as shown in figure 8.43h(II). For an uncompensated sensor, the change in signal with temperature can be 1 to 6% per degree Celsius.

Erroneous results will be obtained if we do not account for this. Therefore, all dissolved oxygen sensors employ specific algorithms to correct for this effect. Algorithms are usually manufacturer specific, because membrane materials play an important role in determining the final mathematical form.

Both solubility and membrane permeability factors are accounted for by temperature compensation employed by the measurement loop. Dissolved oxygen sensors have built-in or adjacent temperature measuring devices that are actively monitored by the transmitter.

Pressure Effects

Dissolved oxygen sensors respond to the amount of oxygen that is present in a liquid. Because oxygen is a gas under normal conditions, the amount of oxygen in a liquid is usually expressed as the partial pressure of oxygen (P_{O2}) or the mole fraction of oxygen (X_{O2}, equal to 0.209 for air). The two quantities are related through the total gas pressure (P_T) of the system as follows:

$$P_{O2} = X_{O2} P_T \qquad \textbf{8.43(9)}$$

Furthermore, the solubility (concentration) of oxygen dissolved in a liquid at a given temperature and pressure follows a relatively simple relationship known as Henry's law,

$$S_{O2} = K_H P_{O2} = K_H X_{O2} P_T \qquad \textbf{8.43(10)}$$

where K_H is a constant that depends on both temperature and liquid composition. This equation shows that solubility varies linearly with partial pressure and total pressure [Figure 8.43h(III)].

This is an important relationship, because dissolved oxygen transmitters require the input of a pressure value (barometric or system pressure) during calibration and operation. Some will even provide real-time pressure corrections using input from an external pressure sensor.

Some dissolved oxygen analyzers are suitable for measurements in both gas and liquid-phase applications. Additionally, calibration can be performed in either the gas or the liquid phase. In this case, the contribution of water vapor pressure to the total gas pressure (and hence the oxygen partial pressure) must be accounted for so as to achieve the highest possible accuracy. Therefore, some dissolved oxygen transmitters are designed so that the influence of water vapor can be entered as a relative humidity value during calibration and operation.

For example, oxygen sensors can be calibrated in water saturated with air, in air saturated with water vapor (in each case, the relative humidity being essentially 100%), or in ordinary air (in which case, the relative humidity is less than 100%). In each case, the appropriate water vapor (relative humidity) correction factor can be entered into the software.

Salinity Effects

The salinity (i.e., the amount of a salt dissolved in water) is usually expressed in terms of mass of salt per mass of solution or mass of salt per volume of solution (gr/1000 gr, $^{o}/_{oo}$). In more general terms, this quantity can be expressed as the mass of chloride per volume of solution (gr/l). A salinity value is directly obtainable from conductivity measurements.

The solubility of oxygen in water decreases nonlinearly with increasing salinity, as shown in Figure 8.43h(IV). The effect is most noticeable for salinity values greater than 2 gr/1000 gr. For comparison purposes, saltwater has a salinity of approximately 35 gr/1000 gr. At 20°C and 1 atm of pressure, the solubility of oxygen in salt water is approximately 7.3 mg/l. The solubility of oxygen in pure water at the same temperature and pressure is 9.l mg/l. Therefore, if salinity compensation were ignored, an error of almost 20% would result.

Application Considerations

The applications in which dissolved oxygen sensors are used include biopharmaceutical, water and wastewater, food and beverage, and chemical processing. Each application category dictates slightly different requirements for the sensor and transmitter. Biopharmaceutical applications require that the sensor body be of a hygienic design to allow for cleanability and to resist clean-in-place and sterilize-in-place conditions. Therefore, the sensor bodies are usually polished stainless steel and have no exposed grooves or crevices where matter can accumulate.

Additionally, membranes usually have an outer layer of Teflon to resist the buildup of coating. In contrast, in wastewater applications, the specifications are less stringent, so sensors are usually constructed from polymer materials, have lower temperature and pressure ratings, and are less resistant chemically.

Similar to biopharmaceutical applications, food and beverage usage usually requires that the sensor be of a hygienic design. However, it does not necessarily need to withstand sterilization conditions. Often, in food and beverage applications, the sensor is exposed only to temperatures that are high enough to pasteurize the process liquid.

© 2003 by Béla Lipták

Chemical process applications require sensor characteristics similar to those for biopharmaceutical and food and beverage applications. In these applications, too, the materials used must withstand higher temperatures and pressures than polymer materials can provide and must have good chemical resistance characteristics. For hazardous area applications, an intrinsically safe sensor must be considered, and manufacturers are usually able to supply intrinsic-safety-related information.

Mounting Considerations The specific application will determine whether a housing or other mounting structure is required. Dissolved oxygen sensors other than portable-unit types are usually mounted in a support structure that offers a secure mounting point or protection from the process environment.

The mountings used for dissolved oxygen sensors are essentially the same as the ones used for pH sensors (Section 8.48). For simple wastewater applications, the sensors are usually mounted in plastic pipe such that the electrical connections are protected from moisture and debris. In more demanding applications, sensors are mounted in a sturdier (usually stainless steel) housing that is resistant to high temperature, high pressure, and aggressive chemical environments. In these cases, the sensor/housing combinations are most often mounted in a weld-in socket on the process vessel or pipe.

Dissolved oxygen sensors can also be mounted in retractable housings; however, this is usually done only for applications in which the sensor can be cleaned, calibrated, and perhaps sterilized within the housing after being retracted from the process.

Bibliography

Bond, A. and Anterford, C. D., Comparative study of a wide variety of polarographic techniques with multifunctional instruments, *Anal. Chem.*, 44, 721, 1972.

Buonauito, R. P., Oxygen analyzers, *Meas. Control*, February 1990.

Cali, G. V., Improvements in pH Control & Dissolved Oxygen Instrumentation For Industrial & Municipal Waste Treatment, *Proc. Conf. on Application of U.S. Pollution Control Technology in Korea*, Seoul, Korea, March 22, 1989.

Cardis, T. M., Managing data from continuous analyzers, *Proc. 1992 ISA Conference*, Houston, October 1992.

D888–92 Standard test methods for dissolved oxygen in water, ASTM International, West Conshohocken, PA, 1996.

D5462–02 Standard test method for on-line measurement of low-level dissolved oxygen in water, ASTM International, West Conshohocken, PA, 1997.

DuCross, M. J. F., Automated methods for assessing water quality come of age, *Env. Sci. Technol.*, October 1975.

Fatt, I., *The Polarographic Oxygen Sensor: Its Theory of Operation and Its Application in Biology, Medicine and Technology*, CRC Press, Boca Raton, FL, 1976.

Filer, S. and Hebert, B., PPB dissolved oxygen measurement—calibration and sampling techniques, *Ultrapure Water*, 15, 37, 1998.

Flato, J., The renaissance in polarographic and voltametric analysis, *Anal. Chem.*, 44, 75A, 1972.

Gallagher, J. P., Oxygen analyzers, *Meas. Data*, May-June 1975.

Guide to the Selection of Oxygen Analyzers, Delta F Corp., Woburn, MA.

Heinzle, F., Bucher, B., Dunn, J., Griot, M., Moes, J., and Sandmeiser, F., Measurement and control of dissolved oxygen below 100 ppb, *Annals of the New York Academy of Sciences*, May 1986, 469, 178–189.

Hitchman, M. L., *Measurement of Dissolved Oxygen*, John Wiley & Sons, New York, 1978.

Höffner, E., The on-line measurement of low level dissolved oxygen, *PowerPlant Chem.*, 3, 406, 2001.

Linek, V., Sinkule, J., and Vacek, V., *Dissolved Oxygen Probes*, Institute of Chemical Technology, Prague, Czech Republic, and Pergamon Press, Oxford, U.K., and New York, 1985.

McLennan, F. and Kowalski, B. R., *Process Analytical Chemistry*, Blackie Academic & Professional, London, 1995.

Molvar, A. E., Instrumentation and automation experiences in wastewater-treatment facilities, EPA Document 600/2–76–198, October 1976.

Neuberger, E. D., Reliable oxygen measurement reduces process costs, *Westinghouse Eng.*, January 1975.

Razaq, M., A new sensor and a microprocessor-based analyzer for monitoring low parts-per-billion oxygen contamination in high purity process gases, ISA Preprint 91–0535.

Shinskey, F. G., *pH and pION Control in Process and Waste Stream*, John Wiley & Sons, New York, 1973.

Smith, G. R., *Oxygen Dynamics*, University of Maryland, Baltimore, MD, 1992.

Wang, H. Y., Transient measurement of dissolved oxygen using membrane electrodes, *Biosensors*, 1989, 4(5), 273–285.

Wattenberg, H., *Atlas of the Dissolved Oxygen Control*, Ashgate Publishing, Aldershot, U.K., 1995.

White, A. F., Peterson, M. J., and Solbay, B. D., Measurement and interpretation of low levels of dissolved oxygen in ground water, *Ground Water*, 28(4), 584–590.

Wolfbeis, O. S., Fiber-optic sensor and biosensors, *Anal. Chem.*, 74, 2663, 2002.

© 2003 by Béla Lipták

8.44 Ozone in Gas

L. J. BOLLYKY (1974 to 2003)

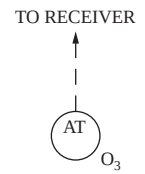

Flow Sheet Symbol

Methods of Detection:	A. Ultraviolet light absorption A1. Single-beam A2. Double-beam B. Amperometric C. Thin-film semiconductor D. Acoustic
Sample Flow Rate:	0.5 to 5 l/min (0.13 to 1.3 SCFM)
Ranges:	0 to 10 ppm by volume (low concentration); 0 to 25% by weight (high concentration)
Sensitivity of Reading:	0.001 ppm by volume (low concentration); 0.001% by weight (high concentration)
Inaccuracy (% of Reading):	A. 1% B. 1 to 5% C. 10% or more D. 0.5%
Cost:	A1. $3,500 to $7,000 A2. $3,000 to $15,000 B. $1,200 to $8,000 C. $400 to $1,500 D. $1,500
Partial List of Suppliers:	Analytical Technology Inc. (ATI), (B) (www.analyticaltechnology.com) Anseros GmBH., (A1) (www.anseros.de) BMT Messtechnik GmBH, (A2) (www.bmt-berlin.de) Capteur Sensors (www.capteur.co.ok) City Technology (www.citytech.com) Eco Sensors Inc., (C) (www.ecosensors.com) Ebara Jitsugyio Co. Ltd. (A-1, C) (ej-kikaku@pop16.odn.ne.jp) In USA Inc., Northeast Controls Inc. (A1, C, D) (www.nciweb.net/in-usa) Orbisphere Laboratories (B) (www.orbisphere.com) OSTI, Inc. (A2) (www.lexcomp.com) PCI–Wedeco Environmental Technologies (A1) (www.pci-wedeco.com) Rosemount Div. Of Emerson Process Management (www.emersonprocess.com) Sota Instruments (www.sotainstruments.com) Teledyne Advanced Pollution Instrumentation Inc. (A1) (www.teledyne-api.com/)

INTRODUCTION

Ozone is an unstable gas that occurs naturally in the atmosphere. Its concentration is usually below 0.1 ppm at sea level but can be substantially higher concentrations at high altitudes[1] or in urban areas during the summer, where outdoor ozone can reach 0.2 ppm or more.

At ground level, it is produced by nature through the interaction of sunlight with the oxygen in the air. In the upper atmosphere, it is produced by electrical storms, and in the lower atmosphere by lightning, or by the interaction of sunlight, oxygen, and organic pollutants (such as hydrocarbons) at ground level. The concentration of ozone at ground level (in smog) has been used as an indicator of the extent of pollution in the air.

© 2003 by Béla Lipták

Ozone is a powerful oxidizing agent and a very strong disinfectant. In industry, it is generated from air or oxygen by means of electrically powered devices called ozone generators. The major uses of ozone include the following:

1. Ozone can be used for the oxidation of pollutants (e.g., organic vapors, odorous materials) and also for disinfection.
2. It is also used for the oxidation of pollutants in water and wastewater treatment, for micro-flocculation, and for disinfection.
3. In the process industries, ozone is used for the bleaching of pulp paper, as a chemical oxidant, and for decolorization.

Ozone Monitoring

Gas phase ozone monitoring and analysis is most frequently done on air or oxygen streams, serving one of the following purposes:

1. Monitoring atmospheric ozone concentrations
2. Monitoring and controlling the ozone concentration in the output of ozone generators
3. Monitoring ozone concentrations in the off-gas streams of ozone treatment systems
4. Monitoring ambient ozone concentration in ozone generator rooms

For workspace safety, the Occupational Safety and Health Administration limits the allowable ozone concentration to 0.1 ppm. In areas where the general public is present, many guidelines and regulations set the limit at 0.05 or even 0.03 ppm.

Ozone monitoring devices can have "cross sensitivities" with oxides of nitrogen (NOx) and with chlorine compounds. For these reasons, it is recommended that the areas where ambient ozone is monitored not only be isolated from the outdoor air but also be separated from chlorine and hydrocarbon fumes.

The ambient ozone monitors should be installed at the height of the operators' head so as to detect the air that is breathed. The monitor should be located in still air, isolated from the outside air. It also should be kept out of sunlight, because sunlight can create interfering gases as it strikes plastics or hydrocarbons. If the ozone monitor is provided with a high alarm, it should be set just below 0.1 ppm, or the required limit.

After the ozone monitor is installed, its calibration should be checked on a quarterly basis. If the area of operation is dusty, wet, or potentially damaging in any other way, the calibration should be checked monthly.

Monitor Designs

References 2 and 3 list several methods that been used for the analysis and monitoring of ozone concentration in gas streams. The most commonly used ozone monitors employ ultraviolet (UV) spectroscopy as the method of detection (see Section 8.61).

Other methods include the amperometric method, in which an electrochemical cell is isolated from the sample gas stream by a gas-permeable but liquid-impermeable membrane, similar to the ones used in dissolved oxygen measurement (Section 8.43). This method permits the use of the same monitor for both gas and liquid phase measurements.

For ozone leak detection applications, the small and portable thin-film semiconductor-type monitor is well suited.

ULTRAVIOLET ANALYZER

Ozone is a strong UV absorber at the wavelength of 253.7 nm (See Tables 8.1c and 8.1v). These instruments are available in a wide variety of complexity and sophistication, as is discussed in some detail in Section 8.61.

The generally accepted value of the ozone absorption coefficient is 3000 ± 30 M^{-1} cm^{-1} at 273 K and at 1 atm.[4] The UV measurement is an absolute method for the detection of ozone in the gas phase, because it does not need to be calibrated by using some other type of sensor.

Single-Beam Design

The single-beam design uses one UV light absorption cell. Figure 8.44a illustrates both a ppm and a percent concentration design. In these designs, every 5 to 20 sec, the sample gas stream and the ozone-free reference gas stream are alternately passed through the absorption cell. The UV light detector measures the intensity of the UV radiation as it leaves the sample cell.

The difference between the UV intensities that are detected when the sample is flowing and when the ozone-free reference sample is used is the basis for computing the ozone concentration in the sample. The computation is based on the Bee–Lambert law below:

$$A = abc = \log_{10} \frac{I_0}{I} \qquad \textbf{8.44(1)}$$

where

A = absorbance
I = UV light intensity-reaching detector with sample in beam path
I_0 = UV light intensity-reaching detector with no sample in beam path
a = absorption coefficient of pure component of interest at analytical wavelength; the units depend on those chosen for b and c
b = sample path length
c = concentration of sample component

Double-Beam Design

The double-beam monitor employs two UV light absorption cells. One monitors the sample stream and the other the ozone-free reference gas stream. Because this design does not require the frequent switching of gas streams, it requires less maintenance. It is also capable of correcting for monitor

© 2003 by Béla Lipták

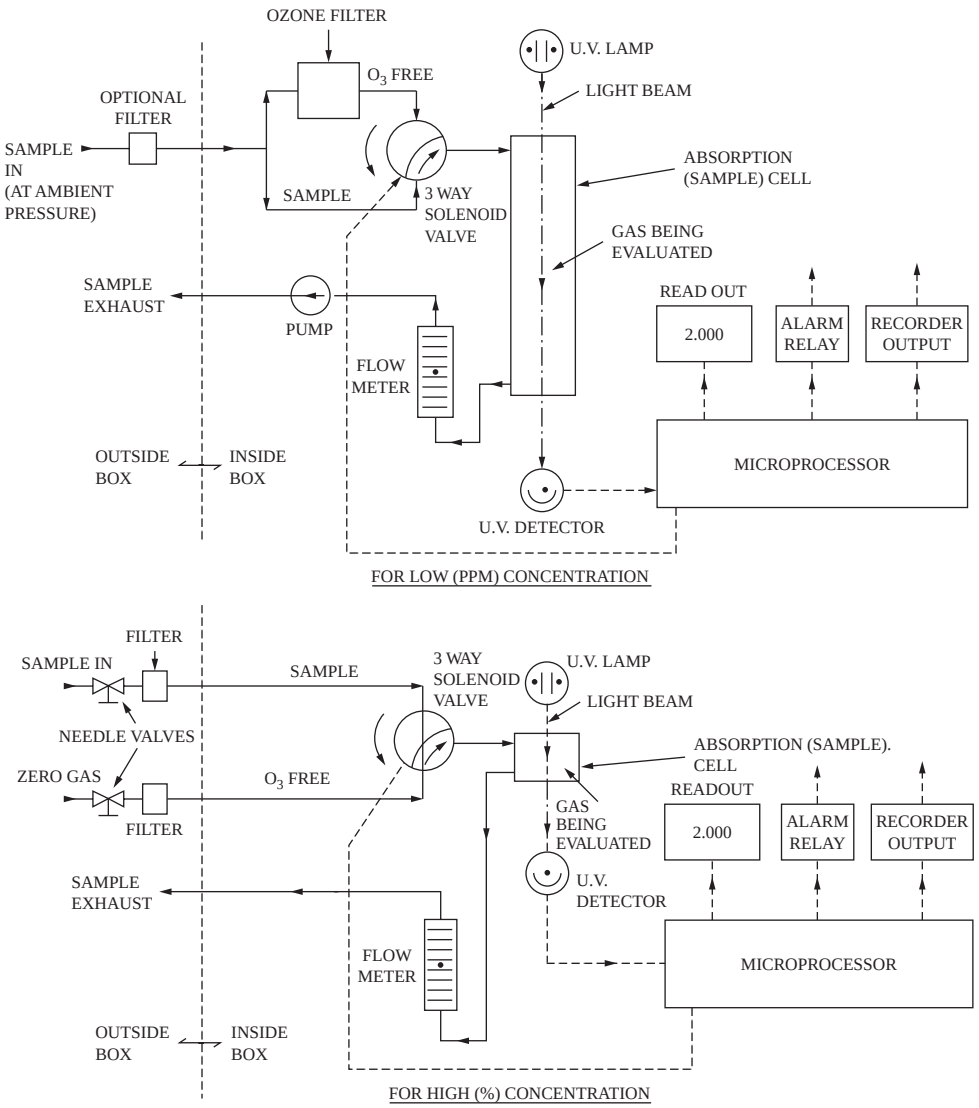

FIG. 8.44a
Single-beam ultraviolet analyzer can be used for both ppm and percent concentration detection of ozone.

cross sensitivity to the presence of other gases in the sample gas streams and for dirt buildup on the windows.

Both types of UV monitors are available with pressure and temperature compensation. UV measurement is usually specific to ozone, because components normally present in the atmosphere or in the off-gases of ozone water treatment systems do not absorb UV at the 253.7 nm wavelength. Naturally, if ozone is being detected in an atmosphere that contains NOx or chlorine, the UV measurement will not be specific, and compensation is required.

AMPEROMETRIC DESIGN

Figure 8.44b illustrates an amperometric electrochemical cell.[5] The cathode is gold, the anode is silver, and the electrolyte is aqueous potassium bromide (similar to Figure 8.43c).

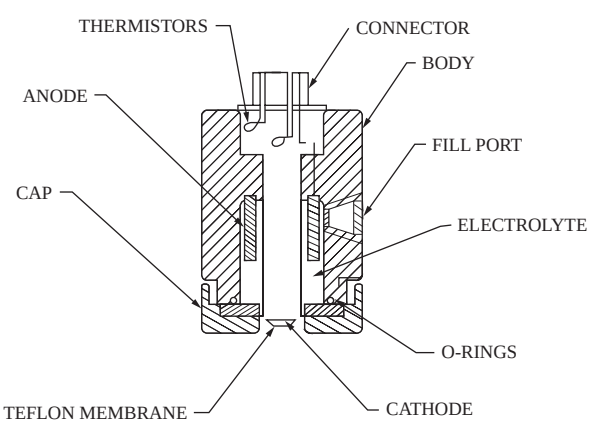

FIG. 8.44b
Membrane type amperometric probe.

© 2003 by Béla Lipták

The cell is isolated from the sample by a gas-permeable, water-impermeable perfluoroalkoxy (PFA) membrane. The cathode and anode reactions are as follows:

$$\text{Cathode:} \quad O_3 + H_2O + 2e^- = O_2 + 2OH^- \qquad \textbf{8.44(2)}$$

$$\text{Anode:} \quad Ag + KBr = AgBr + K^+ + e^- \qquad \textbf{8.44(3)}$$

Calibration

The instrument can be calibrated by chemical methods,[2] against UV-type monitors, or by the air calibration method. The latter method is based on the fact that the ratio of permeation rates of any two gases is constant. Therefore, air calibration involves the determination of the current from the cell when the power supply is –0.7 V and the cell is in the air (which has a known oxygen concentration).

Once this "air current" is determined, the ozone concentration in the gas sample can be computed from the "ozone current" signal of the sample measured at 0.25 V and from the known O_2/O_3 permeation ratio. This air calibration method renders the monitor more convenient to use, but it also makes it less accurate relative to UV or chemical reference calibrations. The inaccuracy of the monitor is about 5% when air calibration is used.

THIN-FILM SEMICONDUCTOR DESIGN

This monitor uses a sensor consisting of an alumina substrate sandwiched between a thin-film platinum heater and a thin-film platinum electrode (Figure 8.44c). The electrode is coated with a thin film of semiconductor.

During measurement, the semiconductor is kept at an elevated temperature by the heater. Because of the adsorption and decomposition of ozone, the resistance of the semiconductor varies substantially in the presence of ozone. The change in resistance is measured, and a corresponding voltage signal is generated that is linearly proportional to the ozone concentration.

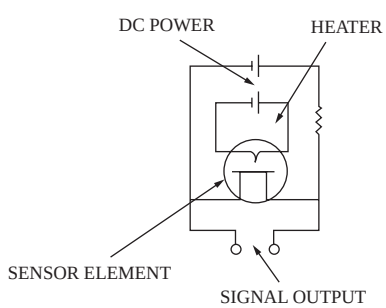

FIG. 8.44c
Thin-film semiconductor ozone monitor.



FIG. 8.44d
Shirtpocket Size Ozone Sensor. (Courtesy of ECO Sensors Inc.)

The unit is available with a 0 to 10 ppm range and a 0.02 ppm sensitivity. It is a portable ozone monitor that is available with a belt clip pouch. It weighs about 6 oz and can be powered by 12 Vdc batteries (Figure 8.44d).

References

1. Bollyky, L. J., *Ozone in Wastewater Treatment and Industrial Applications*, International Ozone Association, Zurich, Switzerland, 1989, 231–245.
2. Rice, R. G., Bollyky, L. J., and Lacy, W. J., *Analytical Aspects of Ozone Treatment of Water and Wastewater*, Lewis Publishers, Boca Raton, FL, 1986.
3. Bollyky, L. J., *Ozone in Wastewater Treatment and Industrial Applications*, International Ozone Association, Zurich, Switzerland, 1989, 562–592.
4. American Water Works Association Research Foundation, Companie Generale des Eaux, *Ozone in Water Treatment Application and Engineering*, Lewis Publishers, Boca Raton, FL, 1991, 98–100.
5. Clark, L. C., Electrochemical Device for Chemical Analysis, U.S. patent no. 2913386.

Bibliography

Ozone monitoring, Chapter 3 in *Air Now,* U.S. Environmental Protection Agency, Washington, D.C. (www.epa.gov/ttn).

© 2003 by Béla Lipták

8.45 Ozone in Water

L. J. BOLLYKY (1974 to 2003)

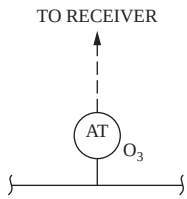

Flow Sheet Symbol

Methods of Detection:	A. Amperometric A1. With bare electrodes A2. With membrane B. Stripping and gas phase detection C. Ultraviolet absorption D. Colorometric [Note: In the past, oxidation-reduction potential (ORP) analyzers have also been used, but now they are only employed in such noncritical installations as in swimming pools, where they signal the presence or absence of ozone.]
Sample Requirements:	Flow: 100 to 500 cc/min for most, but type B requires 1.5 l/min. Types C and D cannot tolerate the presence of suspended matter.
Sensitivity (ppm = mg/l):	A1 and A2. 0.01 ppm B and C. 0.001 ppm D. 0.05 ppm
Ranges (ppm = mg/l):	A1 and B. 0 to 2 ppm A2. 0 to 200 ppm C. 0 to 5 ppm D. 0 to 1.5 ppm
Inaccuracy (ppb or Percent of Reading):	A1. 1 ppb A2. 5 ppb to 1% B. 1% C. 3% D. 1.5%
Costs:	A1. $8,000 A2. $2,500 to $8,000 B. $5,500 to $8,500 C. $3,000 to $5,000 D. $300 to $3,000
Partial List of Suppliers:	Analytical Technology Inc. (ATI), (A2) (www.analyticaltechnology.com) Anseros GmBH, (A1, B) (www.anseros.de) BMT Messtechnik GmBH, (A2) (www.bmt-berlin.de) Capteur Sensors (www.capteur.co.ok) Eco Sensors Inc., (B) (www.ecosensors.com) Hach Corporation (D) (www.hach.com) In USA Inc. Northeast Controls Inc. (B, C) (www.nciweb.net/in-usa) Orbisphere Laboratories (A2) (www.orbisphere.com) OSTI, Inc. (C) (www.lexcomp.com) Polymerton SA, (A2) (www.polymerton.com) Rosemount Div. Of Emerson Process Management (A2) (www.emersonprocess.com) Sota Instruments (www.sotainstruments.com) Teledyne Advanced Pollution Instrumentation Inc. (C) (www.teledyne-api.com/)

© 2003 by Béla Lipták

INTRODUCTION

Dissolved ozone concentrations can be detected from as low as ppb to as high as 200 gr/m^3. Ozone monitoring is used for (1) dissolved ozone measurement in water treatment, (2) in ozone treatment of wastewater, (3) ozone contactor monitoring, and (4) industrial ozone treatment process monitoring.

Ozone is primarily used for the treatment of water, wastewater, and water slurries such as paper pulp.[1–3] For these applications, ozone is generated from air or from oxygen by electrically powered ozone generators. The output of a typical ozone generator contains 1 to 10% ozone by weight.

The ozone is transferred into the water in *ozone contactors*, which act as mass transfer devices as well as reactors for the treatment. The efficiency of the mass transfer in the contactor is monitored by measuring the ozone concentrations in the gas phase (see Section 8.44) at both the contactor's inlet and discharge. The dissolved ozone concentration in the ozone contactor is an indication of the progress of the treatment reaction or of disinfection.

In most water and wastewater treatment applications, when the ozone is generated from air, its solubility under ambient conditions is approximately 4 mg/l. When the ozone is generated from oxygen, its solubility is 15 mg/l.[4]

In these applications, the ozone is used for disinfection, chemical oxidation, or microflocculation. In paper pulp applications and in some wastewater treatment processes, it is also used for decolorization, bleaching, and disinfection.

Drinking Water Disinfection

The Surface Water Treatment Rules of the U.S. EPA[5] specify the use of CT values as the standard for drinking water disinfection using ozone or other chemical disinfectants. The CT value is the product of ozone (or disinfectant) concentration (C) in mg/l and the time of exposure of the water to the disinfectant in minutes (T). Therefore, to ascertain that the disinfection meets the U.S. EPA standard, the ozone concentration in the water (C) must be accurately monitored.

The methods in use for the monitoring and analysis of ozone in water solutions[6] fall into two categories.

1. *Methods specific to ozone*. These methods are able to determine the ozone concentration with no or very little interference from the other chemicals. These methods are suitable for monitoring the progress of disinfection or of chemical oxidations. They include the indigo method, the amperometric-membrane method, the stripping and gas phase detection method, and the UV method (for deionized high-purity water).
2. *Methods that are not specific to ozone*. These methods determine the concentration of total oxidants and, if no other oxidant is present, they are suitable for controlling ozone generators or for controlling the rate of dosing ozone into the water. These methods include the amperometric-bare electrode method and the potassium iodide chemical method.

AMPEROMETRIC SENSORS

Amperometric analyzers utilize an electrochemical cell for the determination of ozone.[7] Two types are in use. In the first design, the bare-metal electrodes are in direct contact with the water, whereas, in the second design, the electrochemical cell is separated from the process water by a semipermeable membrane, as in Figure 8.44b.

Bare Metal Electrodes

In the bare-metal electrode design of the amperometric ozone monitor, the water, as it flows through the galvanic cell, serves as the electrolyte. The oxidizing agents present in the water are reduced at the cathode. The generated current is proportional to the concentration of all the oxidants. Therefore, ozone monitors of this type are not specific for ozone. Measurement errors caused by the presence of other oxidants and oxidation by-products can be mitigated by the proper choice of the galvanic electrode pairs (e.g., Au/Cu, Au/Ag, Pt/Cu, and Ni/Cu), and this choice depends on the other oxidants that are expected to be present.

In water treatment plants, when the predominant oxidant is ozone and the concentration of other oxidants is zero or is nearly constant, the rugged and reliable bare-metal-electrode monitors can be used effectively. They can control both the ozone generators and the settings of ozone dosage controllers (Figure 8.45a).

Membrane-Type Designs

Membrane-type amperometric ozone monitors are more selective to ozone, because the membrane keeps most of the other

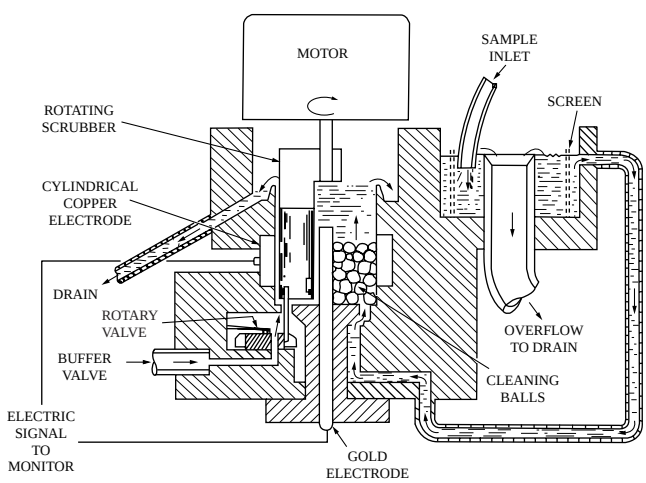

FIG. 8.45a
Amperometric ozone detector.

© 2003 by Béla Lipták

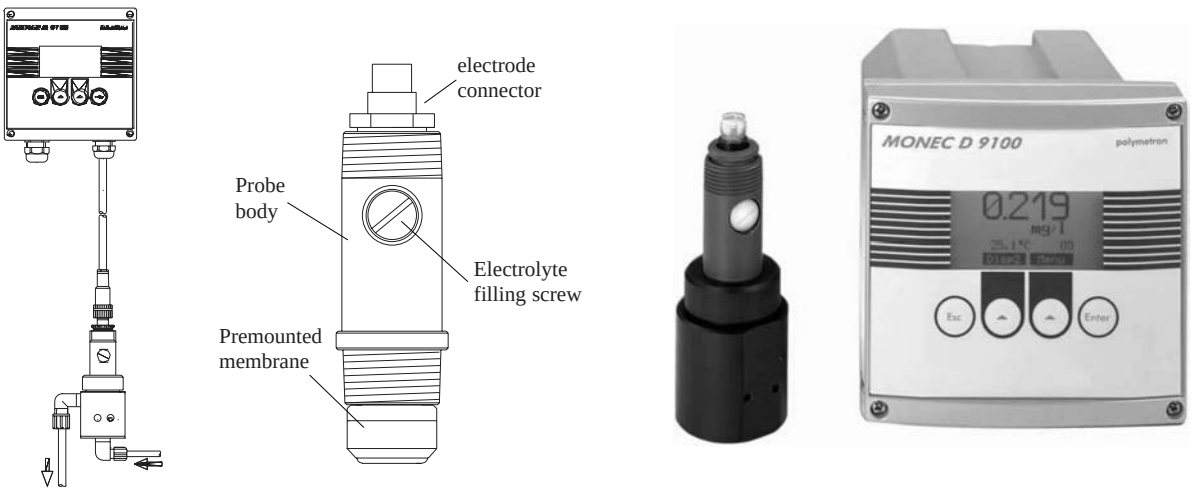

FIG. 8.45b
On-line dissolved oxygen monitor for water treatment plants. (Courtesy of Polymerton SA.)

oxidants out of the electrochemical cell. The membrane is permeable only to gas—not to water. These monitors can be employed for the measurement of ozone in both water solutions and in the gas phase (Section 8.44). However, when the membrane is semipermeable to water, the monitor can measure ozone only in water solutions—not in the gas phase.

The unit illustrated in Figure 8.45b has a gold cathode, a silver anode, and a measuring cell that can be made out of PVC or 316L SS. It has a measuring range of 0 to 2 ppm and a repeatability that is the greater of 5 ppb or 5% of measurement. Its response time is 60 sec. It is available with two smart outputs, four dry-contact NO/NC relay outputs, and automatic recognition of its own status.

Amperometric ozone analyzers need to be calibrated every one or two months against some reference method such as the stripping, the UV, or the colorimetric indigo methods, which are described below.

STRIPPING AND GAS PHASE MONITORS

In this method, the dissolved ozone is stripped from the water by the use of inert gases such as nitrogen, oxygen, and air, which are bubbled through a packed-tower-type scrubber. UV monitors are used to analyze the gaseous ozone, which is stripped from the water. This method eliminates the potential interference by oxidants that are present in the water.

The stripping method is cumbersome and is subject to operational problems such as incomplete stripping, ozone decomposition during the stripping, and entrainment of liquid droplets into the gas sample. Therefore, calibration by a more reliable method is desirable. This can be obtained by determining the dissolved ozone concentration in the water prior to stripping by means of the indigo method.

ULTRAVIOLET ABSORPTION

The concentration of dissolved ozone in water can be measured by the absorption of ultraviolet (UV) light at wavelengths from 253.7 to 260 nm. However, there is an uncertainty concerning the molar absorption coefficient of aqueous ozone in natural waters. Values of 2600 to 3600 M^{-1} cm^{-1} are reported in the literature.[3]

Another complication is caused by the fact that water from natural sources such as lakes, rivers, and wells is likely to contain dissolved organic compounds that have strong UV light absorption at the wavelengths that are used for ozone detection. Therefore, the use of the UV absorption method is recommended only for the measurement of dissolved ozone in deionized, high-purity waters. UV absorbance of ozone in pure water is reported to be 2950 M^{-1} cm^{-1} at 258 nm.[8]

COLORIMETRIC METHOD

The best known, most frequently used colorimetric method is the indigo trisulfonate method for the measurement of ozone dissolved in water. This method was developed by Hoigne and Bader from 1979 to 1982.[8] It is considered to be the most selective, sensitive, precise, and fast method among all chemical methods. Interference by manganese ions, chlorine, hydrogen peroxide, and by the decomposition and oxidation products of ozone are all the lowest for this method.

The Indigo Method

The indigo method utilizes the decolorization of the the stock solution of blue potassium indigo trisulfonate by dissolved ozone. The disappearance of this blue color is monitored spectrophotometrically at the wavelength of 600 nm. The dissolved

© 2003 by Béla Lipták

ozone concentration is calculated from the difference in light absorption of an untreated blank and of a treated sample, as follows:

$$\text{dissolved } O_3 \text{ mg/l} = \Delta \text{ absorption} \times 100/f \times b \times v \quad \textbf{8.45(1)}$$

where

b = path length of the cuvette in cm

v = the volume of the ozone-containing sample added in ml (normally 90 ml) to raise the total volume of the sample plus the indigo solution to 100 ml

f = 0.42 ± 0.1 cm^{-1} per mg/l indigo, based on molar absorptivity = 20,000 M^{-1} cm^{-1}

The grab sample analysis can be carried out with standard laboratory wares when the method is used for the calibration of other methods.

The indigo method is employed in the "AccuVac Ampul" ozone measurement. For this measurement, all the necessary chemicals are prepackaged under vacuum into a cuvette-ampul device. The sealed glass tip of this device is submerged in the ozone-containing water sample, and the tip is broken open to allow the water to enter the device and dissolve the chemicals therein. The cuvette-ampul is used directly for the spectrophotometric determination of the dissolved ozone.

The indigo method can also be automated by the use of gas diffusion-flow injection.[9] In this procedure, the dissolved ozone in the sample stream is allowed to diffuse into an indigo solution stream through a 0.45-μm pore size Teflon® membrane. This causes the decolorization of the treated indigo solution stream, which is analyzed spectrophotometrically.

References

1. Bollyky, L. J., *Ozone in Water Treatment*, International Ozone Association, Zurich, Switzerland, 1989.
2. Bollyky, L. J., *Ozone in Wastewater Treatment and Industrial Applications*, International Ozone Association, Zurich, Switzerland, 1989.
3. American Water Works Association, Research Foundation, Companie Generale des Eaux, *Ozone in Water Treatment, Application and Engineering*, Lewis Publishers, Boca Raton, FL, 1991.
4. Perry, R. H. and Green, D., *Perry's Chemical Engineer's Handbook*, 6th ed., McGraw-Hill, New York, 1984.
5. *Federal Register*, 52(212), November 3, 1987.
6. Rice, G., Bollyky, L. J., and Lacy, W. J., *Analytical Aspects of Ozone Treatment of Water and Wastewater*, Lewis Publishers, Boca Raton, FL, 1986.
7. Clark, L. C., Electrochemical Device for Chemical Analysis, U.S. Patent no. 2913386.
8. Bader, H. and Hoigne, J., Determination of ozone in water by the indigo method: a submitted standard method, *Ozone Sci. Eng.*, 4, 169–176, 1982.
9. Straka, M. R. et al., Residual aqueous ozone determination by gas diffusion flow injection analysis, *Anal. Chem.*, 57, 1799, 1985.

Bibliography

Binder, D. M. and Bollyky, L. J., Ozone removal of herbicides in drinking water, *Proc. Eleventh Ozone World Congress*, 1, 5-3-16, San Franciscom 1993.

Bollyky, L. J., Benefits of ozone treatment for bottled water, *Proc. Int. Ozone Assoc.*, 2002 Pan American Group Conference, May 18–22, Raleigh-Durham, NC, 2002.

Bollyky, L. J., Two stage AOP treatment of drinking water at celina, OH, application and optimization of ozone for potable water treatment, *Proc. International Ozone Association Conference*, 85, Ottawa, Ontario, Canada, 1996.

Bollyky, L. J., Zebra mussel control with side stream ozonation: design considerations, ozone for drinking water treatment, *Proc. International Ozone Association Conference*, 183, Cambridge, MA, 1995.

Bollyky, L. J., Ozone contactor design for drinking water treatment, emerging technology in practice, *Proc. AWWA Conference*, Cincinnati, OH, 1990.

Bollyky, L. J. and Seiler, J., Removal of tributyl phosphate from water by advanced ozone oxidation methods, in *Ozone in Water Treatment*, L. J. Bollyky, Ed., Port City Press, New York, 1989.

Joost, R. and Bollyky, L. J., Optimization of ozone contactors for drinking water disinfection, , in *Ozone in Water Treatment*, L. J. Bollyky, Ed., Port City Press, New York, 1989.

Mazzei, A. L., Meyer, R. M., and Bollyky, L. J., Mass transfer of high concentration ozone with high efficiency injectors and degassing separators, ozone for drinking water treatment, *Proc. Int. Ozone Assoc. Conference*, 161, Cambridge, MA, 1995.

Mazzei, A. L. and Bollyky, L. J., Optimization mass transfer efficiency and ozone utilization with high efficiency venturi injectors, ozone in the Americas, *Proc. Int. Ozone Assoc. Conference*, 197, Toronto, Canada, 1991.

Misco, T. J., Schiflacqua, M., and Bollyky, L. J., Ozone Treatment for Cryptosporidium Control at Milwaukee, WI, USA, *13th Ozone World Congress Proc.*, Kyoto, Japan, 1, 91–7, 1997.

Ozone measurement in potable water, *Water and Wastewater Ind.*, August 2002.

Ozone monitoring, Chapter 3 in *Air Now*, U. S. Environmental Protection Agency, Washington, D.C. (www.epa.gov/ttn).

© 2003 by Béla Lipták

8.46 Particulates, Opacity, Dust, and Smoke

R. A. HERRICK (1974) **G. F. McGOWAN** (1982) **B. G. LIPTÁK** (1995, 2003)

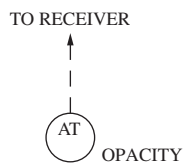

Flow Sheet Symbol

Sample and Monitor Types:
A. High-volume sampler
B. Dichotomous sampler
C. Tape sampler
D. Manual stack sampler
E. Piezoelectric crystal mass balance
F. Impaction devices
G. Radiometric devices
H1. Charge transfer
H2. Surface ionization
I. Light attenuation/transmissometer
J. Light scattering
K. Visual observation
L. Remote sensing
M. Stack gas monitors
M1. Sampling probes

Potential Applications: Visibility (I, J, K); fire/smoke detection (G, I); particle sizing (B, F, I, J)

Type of Sample and Installation: *In situ* (G, H, I, J, I, K, L); extractive (A, B, C, D, E, F, G); ambient air (A, B, C, D, E, F, G, I); flue/stack gas (D, F, G, H, I, J, K, L)

Reference Methods: EPA 40 CFR 50 Appendix B (A); ANSI/ASTM D1704–78 (C); EPA 40 CFR 60 Appendix A, Method 5; ANSI/ASTM D2928–71; ANSI/ASTM D3685–78 (D); EPA 40 CFR 60 Appendix B, Perf Spec 1 (I); EPA 40 CFR 60 Appendix A, Method 9; ANSI/ASTM D3211–79 (K)

Standard Smoke Density Ranges: In units of % opacity, 0 to 18.7%, 0 to 33.9%, 0 to 64.5%, 0 to 87.4%, and 0 to 98.4%; in units of optical density, 0 to 0.09, 0 to 0.18, 0 to 0.45, 0 to 0.9, and 0 to 1.8

Inaccuracy of Smoke Density Transmissometers: ±3% of range

Costs:
A and H1. <$2500
B, C, D, E. $2500 to $6500
F. $1200 to $5000
G, H2, I. $5000 to $20,000
J, L. $5000 to $100,000
M. $5000 to $7000 for portable O_2, CO, NO_x, and SO_2 detection packages and $25,000 to $35,000 for a package to continuously monitor the emissions of CO, CO_2, SO_2, NO, NO_x, O_2, and opacity. (For costs of analyzers for individual stack gases, see Sections 8.9 and 8.10 for CO and CO_2; Section 8.25 for hydrocarbons; Section 8.42 for O_2; Section 8.37 for NO_x; and Section 8.56 for SO_x analyzers.)
M1. Probes only in 3- to 10-ft (1- to 3-m) lengths with glass, quartz, or stainless steel lining: from $1300 to $2500 [For a complete EPA (Reference Method 5) particulate-sampling system, $10,000 to $15,000.]

Partial List of Suppliers: For types I, J, and L, also refer to the supplier's lists in Sections 8.27, 8.40, and 8.61.
ABB Inc. – Analytical Products (M) (www.abb.com/analytical)
Adcantech Automation Corp. (A, B, M) (www.advantech.com)
Ametek Thermox (M) (www.thermox.com)
Babbitt International Inc. (C, M) (www.babbittlevel.com)
Bacharach Inc. (D, M1) (www.bacharach-inc.com)

© 2003 by Béla Lipták

Baldwin Environmental Products (M1) (www.bei-reno.com)
CEA Instruments Inc. (M) (www.ceainstr.com)
Control Instruments Corp. (A, B, M) (www.controlinstruments.com)
Cosa Instrument Corp. (M) (www.cosa-instrument.com)
Flow-Tech Inc. (M) (www.flowtechonline.com)
Fluid Components Int. (A, B, M) (www.fluidcomponents.com)
Hamilton Standard (C, M) (www.hs-ait.com)
Hays Cleveland (M) (www.hayscleveland.com)
Horiba Instruments Inc. (I, M) (www.nettune.net/horiba.com)
KNF Neuberger Inc. (M) (www.knf/.com)
Kurz Instruments Inc. (M) (www.kurz-instruments.com)
Lear Siegler Australia (A) (www.learsiegler.com.au)
Midac Corp. (M) (www.midac.com)
MKS Instruments Inc. (M) (www.mksinst.com)
MGP Instruments (D, M1) (www.mgpi.com)
MSA Instrument Div. (C, F, M) (www.msanet.com)
Neutronics (B, M) (www.neutronicsins.com)
Panametrics Inc. (M) (www.panametrics.com)
PCME Ltd. (B, D, M) (www.pcme.co.uk)
Perma Pure (M) (www.permapure.com)
Racwill Environment (D) (www.pacwill.ca)
Rosemount Analytical Inc. (I, M) (www.processanalytic.com)
Rupprecht & Patashnick Co. (M1) (www.rpco.com)
Sensidyne, Inc. (D, M1) (www.sensidyne.com)
Servomex (M) (www.servomex.com)
Sick Maihak Inc. (I, M) (www.sickmaihak.com)
Siemens Applied Automation (M) (www.sea.siemens.com)
Sierra Monitor Corp. (A, B, F, M1) (www.sierramonitor.com)
Teledyne Analytical Instruments (D, M, M1) (www.teledyne-ai.com)
Testo Inc. (M) (www.testo.com)
Thermo Anderson (D) (www.thermoandersen.com)
TSI Inc. (M) (www.tsi.com)
Yokagawa Corp. of America (M) (www.yca.com)
Westinghouse Process Control (M) (www.westinghousepc.com/)

INTRODUCTION

This section is devoted to smoke and dust density measurement, which is performed most often by detecting opacity, or optical density. There are two major families of applications for these types of instruments. One is the measurement of the quality of ambient air, and the other is stack emission monitoring. The two applications overlap somewhat and some of the sensors discussed in this section can be used for both applications. Ambient air quality detectors are also described in Sections 8.5 and 8.40 of this chapter, and the subject of stack emission samplers is covered in Section 8.3.

This section is so organized that the definitions and theoretical concepts applicable to particulate measurement are discussed first. This is followed by the discussion of stack gas monitoring and the analyzers used for ambient air monitoring are discussed last.

DEFINITIONS AND THEORETICAL CONCEPTS

Suspended solids in gas will absorb, reflect, and scatter radiation (Figure 8.46a). These effects all attenuate the energy of radiation that is received at the detector. If the particle size is smaller than the wavelength of radiation, the attenuation is caused mostly by absorption. When the particle size is equal to or larger than the wavelength, the dominant form of attenuation is scattering.

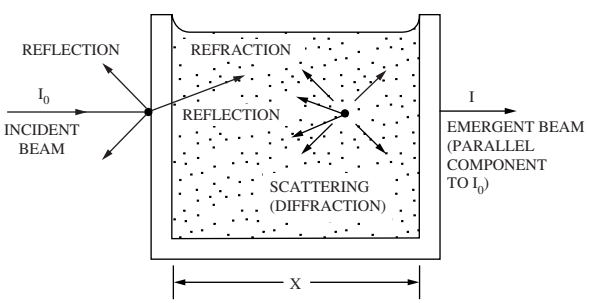

FIG. 8.46a
When parallel mononchromatic (single-wavelength) light (I_0) enters a stack, parts of it are reflected, refracted, scattered, and absorbed, and only the remaining attenuated (I) light emerges from the stack.[1]

Most particle sizes in industrial emissions fall between 0.1 and 50 μm, and the wavelength of light used for opacity measurement is in the range of 0.38 to 0.78 μm. Because light attenuation decreases with particle size when measuring

© 2003 by Béla Lipták

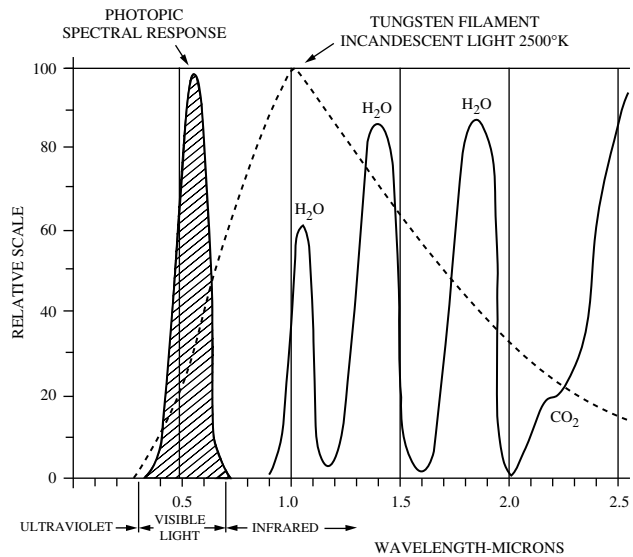

FIG. 8.46b
The spectral responses of "photopic" and "incandescent" light sources. With incandescent light, errors resulting from water absorption and low readings of submicron particulates will occur.[2]

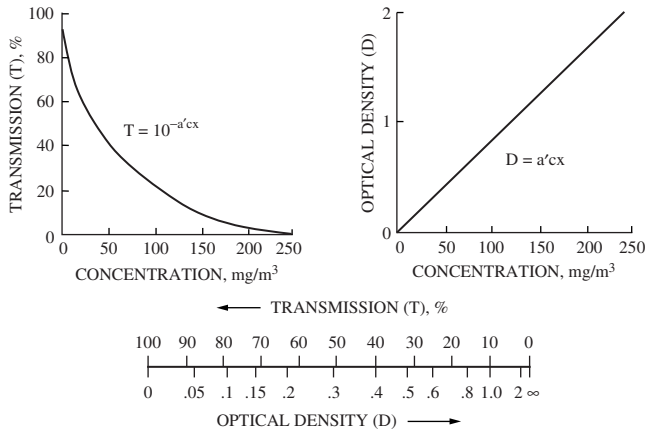

FIG. 8.46c
The relationship between transmission (T), concentration or dust loading, and optical density (D).

submicron particles, it is desirable to use short wavelengths (0.38 to 0.78 μm) when measuring particulates in stacks.

Opacity Measurement

The objective of opacity measurement is to observe visible emissions the same way they are observed by the human eye. The spectral sensitivity of the light-adapted human eye is *photopic*, having its maximum sensitivity at a wavelength of about 0.55 μm. To reproduce the human eye, the spectral distribution of the light source in an opacity meter should also be photopic.

Figure 8.46b shows the outputs of both a photopic and an incandescent light source. If an incandescent light source is used in an opacity meter, the readings will be in error. One component of the error will be the result of water absorption in the near-infrared region, and the other error component, which will cause a low reading, will be caused by the effect of submicron particulates, to which the human eye is more sensitive. Therefore, transmissometers used for compliance with opacity regulations must operate in the visible photoptic spectrum.

Units and Definitions

The ratio of I/I_0 (Figure 8.46a) is called transmittance (T). It is usually expressed as a percentage, with 100% corresponding to zero attenuation ($I = I_0$). Percent opacity (O) is the difference between 100% opacity and transmittance (T) ($O = 100 - T$). The Beer–Lambert relationship defines transmittance (T) as follows:

$$T = e^{-naql} \qquad \textbf{8.46(1)}$$

TABLE 8.46d
*Standard Ranges of Smoke Density Monitors**

Optical Density	*% Opacity*
0 to 0.09 and 0.18	0 to 18.7 and 33.9
0 to 0.18 and 0.45	0 to 33.9 and 64.5
0 to 0.45 and 0.90	0 to 64.5 and 87.4
0 to 0.90 and 1.80	0 to 87.4 and 98.4

*Courtesy of Lear Siegler Inc.

where

T = fraction of light transmitted (transmittance)
n = number of particles per unit volume
a = mean particle projected area
q = particle extinction coefficient
l = length of effluent path
e = base of natural logarithm

The product of n, a, and q is often referred to as the *turbidity attenuation coefficient*.

Dust Loading The Lambert–Beer law can also be used to determine the dust loading in the stack (mg/m^3), because dust loading can be determined for transmittance (T), as shown in Figure 8.46c. Optical density is a measure of light attenuation and is proportional to both path length and particulate concentration.

$$D = \text{opacity density} = \log_{10}[1/(1 - \text{opacity})] \qquad \textbf{8.46(2)}$$

Therefore, optical density can also be determined (Figure 8.46c) once the dust loading (mg/m^3) is known. Numerically, one might say that transmittance becomes very small (<10%) or opacity very large (>90%) when optical density reaches 1.0; when it rises to 2.0, transmittance is almost 0%, and the substance is completely opaque. Some of the standard ranges for stack monitoring applications are given in Table 8.46d in both units of percent opacity and of optical density.

© 2003 by Béla Lipták

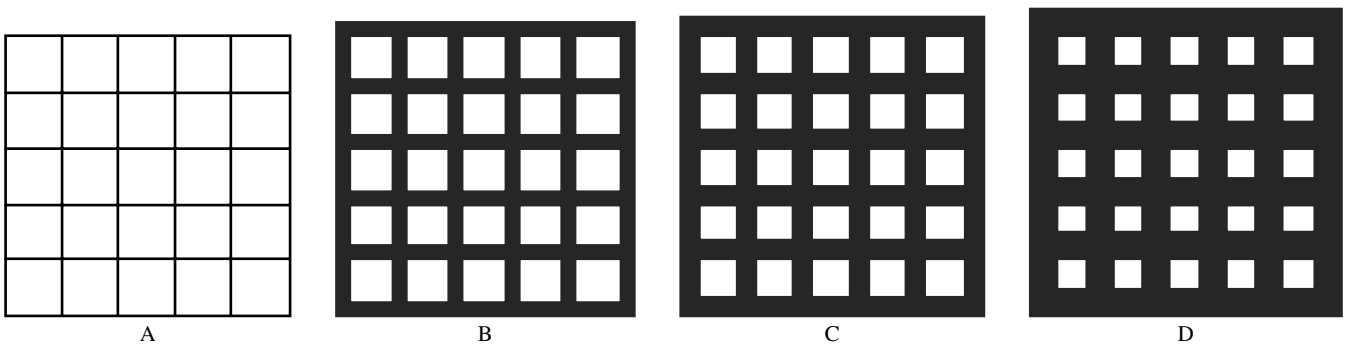

FIG. 8.46e
Ringelmann's scale for grading smoke density. A, Card 1 (equivalent to 20% black) has black lines 1 mm thick, 10 mm apart, leaving white spaces 9 mm square; B, Card 2 (equivalent to 40% black) has black lines 2.3 mm thick, 10 mm apart, leaving white space 7.7 mm square; C, Card 3 (equivalent to 60% black) has black lines 3.7 mm thick, 10 mm apart, leaving white space 6.3 mm square; D, Card 4 (equivalent to 80% black) has black lines 5.5 thick, 10 mm apart, leaving white spaces 4.5 mm square. Not shown: Card 0 (all white) and Card 5 (all black).

Ringelmann Card Numbers Another opacity measurement unit is based on Ringelmann card numbers. Ringelmann cards consist of a series of five cards that present graduated shades of gray from white to black for the evaluation of smoke density or opacity. The system utilizes a rectangular grill of black lines of definite width and spacing on a white background, which can be accurately reproduced (Figure 8.46e). The rule by which the chart may be reproduced is as follows:

Card 0. All white
Card 1. Black lines 1 mm thick, 10 mm apart, leaving white spaces 9 mm square
Card 2. Lines 2.3 mm thick, 10 mm apart, leaving white spaces 7.7 mm square
Card 3. Lines 3.7 mm thick, 10 mm apart, leaving white spaces 6.3 mm square
Card 4. Lines 5.5 mm thick, 10 mm apart, leaving white spaces 4.5 mm square
Card 5. All black

STACK GAS AND PARTICULATE MONITORING

When all the components in the stack gas are to be simultaneously monitored, a combination system is required. This is because the absorption bands of the different components of interest are in different parts of the radiation spectrum.

Particulate Sampling

Particulate sampling has already been covered in Section 8.3 and therefore it is only briefly mentioned. A complete Environmental Protection Agency (EPA) particulate-sampling system (Reference Method 5) is composed of a pitot probe, a sampling unit, and a control unit with a vacuum pump. Figure 8.3a has shown this EPA particulate-sampling train.

In some of these sampling packages, a microprocessor directs the automatic sampling (Figure 8.46f) method, which can be selected to follow U.S. EPA Method 5 or other international methods specified by VDI, BS, or ISO. The microprocessor stores all measurements, reviews and diagnoses all inputs, controls the required parameters, calculates isokinetic conditions, and reports the results either in a printed form or by transferring it to a floppy disk.

Besides the controller, such a package usually consists of a probe, a filter (hot) box, a cold box, a flexible sample line, glassware, a node box, and a monorail system. The probe is usually 3, 5, 7, or 10 ft (0.9, 1.5, 2.1, or 3 m) and made of stainless steel with a glass liner. Most probes are jacket heated and are provided with both a liner thermocouple and a stack temperature thermocouple.

Stack Gas Monitoring Packages

Opacity is measured in the visible region (Table 8.46d); SO_2 and NO_2 absorption bands fall in the ultraviolet region (Figure 8.46g), whereas the absorption bands of CO, CO_2, and hydrocarbons fall in the infrared region (Figure 8.46h).

Some of these stack monitoring packages have been discussed in Sections 8.3, 8.27, and 8.42, and that coverage is not repeated here. On the other hand, it is important to realize that packages for multicomponent analysis are available (Figures 8.46i and 8.46j), and some of them can also include excess oxygen analysis (Figure 8.42n).

Light Attenuation and Transmissometers

Transmissometers are the most accepted and frequently used means for the automatic and continuous monitoring of particulate in stack gases.[4] In its most basic form, a transmissometer consists of a light source and a detector (Figure 8.46k). By referencing all measurements of the partially obstructed optical path to the clear path measurement, the transmissometer essentially provides a measurement of light attenuation, which can be expressed in units of optical density or opacity.

Optical density, which is sometimes called *extinction*, varies linearly with particulate concentration if a relatively uniform distribution of particle size, composition, and path length exists.[5] Opacity, on the other hand, varies from 0 to

© 2003 by Béla Lipták

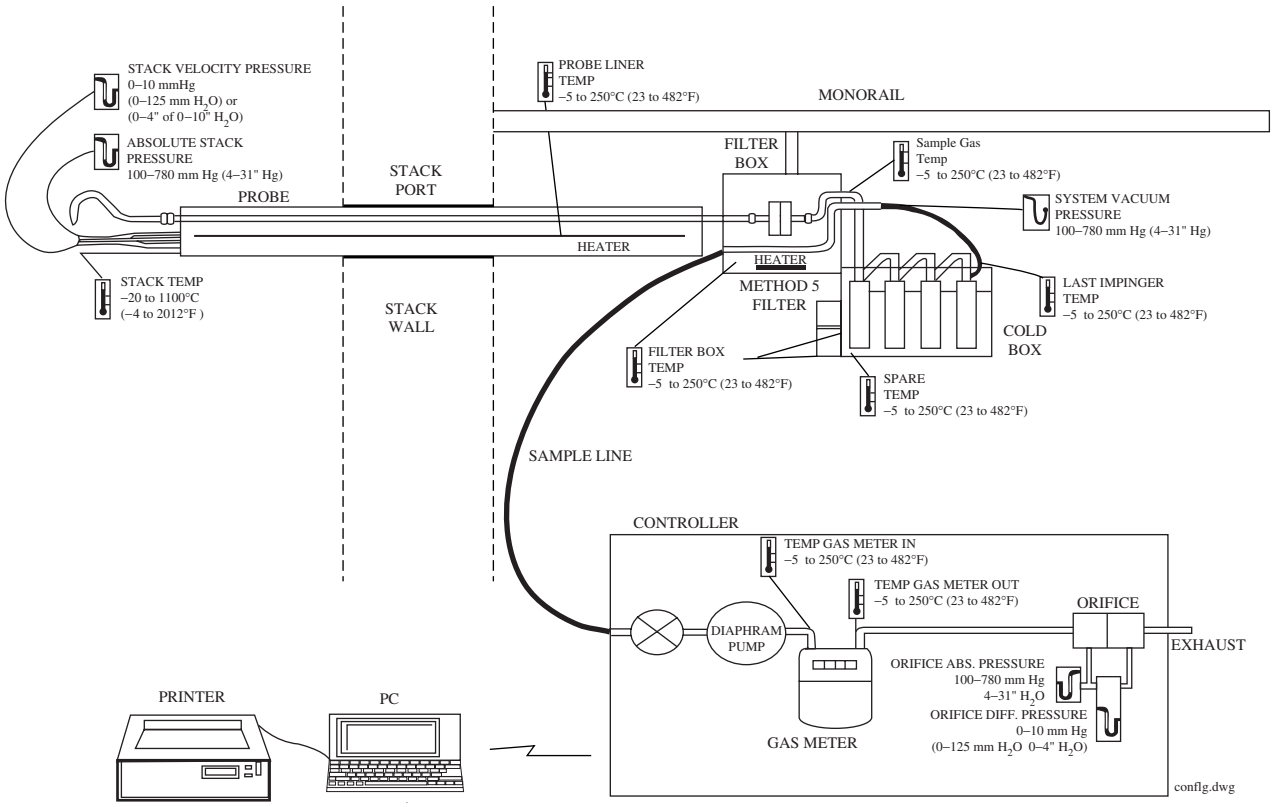

FIG. 8.46f

Components of an automatic sampling train – ATS. (Courtesy of ThermoAndersen.)

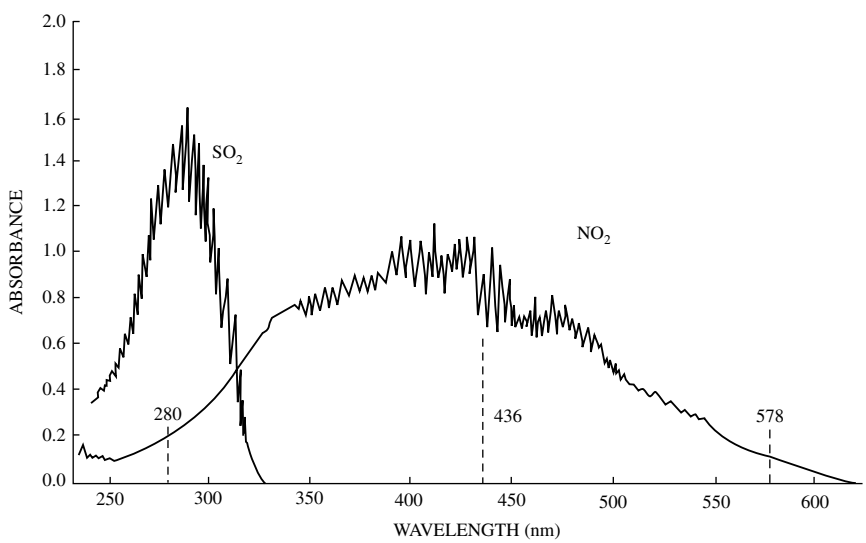

FIG. 8.46g

The absorbance of SO_2 and NO_2 in the ultraviolet range.

100%—from clear to opaque conditions, respectively. Opacity can be related linearly to the Ringelmann numbers used by human observers. It is also the parameter typically regulated by the EPA to ensure proper operation and maintenance of particulate control equipment.

Transmissometers have become rather sophisticated, having been developed to achieve exceptional accuracy and reliability.[6]

Single-Pass Configuration In a single-pass system, the light source is mounted on one side of a duct, and the detector is mounted on the other (Figure 8.46k). Consequently, the light passes through the gas or medium of interest only once. The major difficulty imposed by this configuration is its calibration. This is because the detector cannot be easily calibrated or exposed to a known light source without adding an additional

© 2003 by Béla Lipták

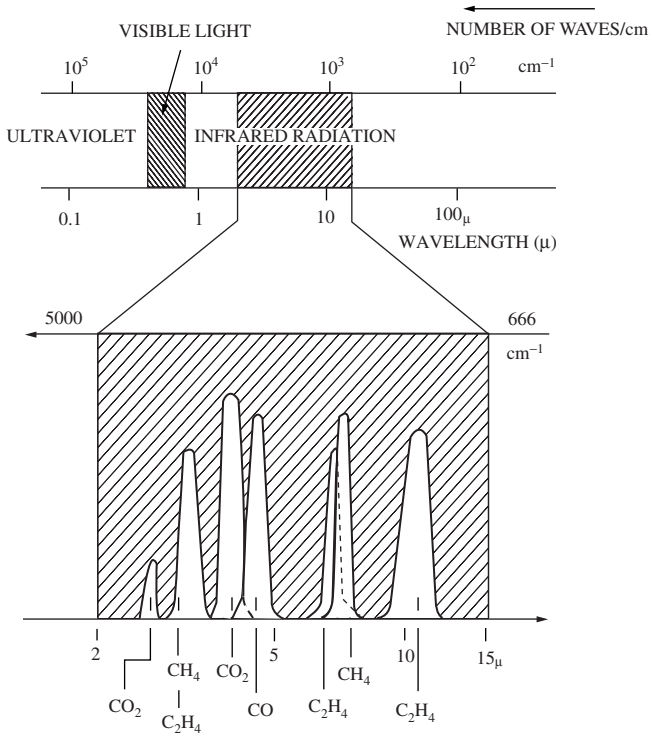

FIG. 8.46h
The absorption bands of CO_2, and CO_2 and hydrocarbons fall into the infrared region.

light source specifically for that purpose, or by using other means that are not required in the normal measurement.

Double-Pass Configuration A double-pass system incorporates both a light source and a detector on the transceiver side of the stack, and it provides a retroreflector on the opposite side. With this configuration, the light passes through the gas of interest twice, thereby increasing the sensitivity of the

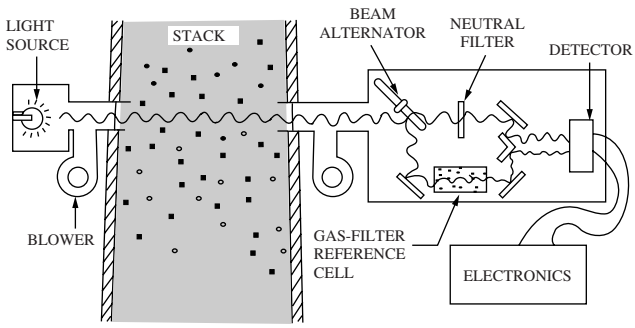

FIG. 8.46i
Dual-beam IR analyzer for multicomponent stack emission monitoring.

measurement. Furthermore, this configuration allows all the active components to be contained in the transceiver and permits a simple solenoid-mounted reflective surface to be incorporated into the transceiver to provide a simulation or calibration check of the zero-opacity condition. Internal filters can be activated sequentially to provide upscale checks of calibration.

The operation of the double-pass opacity analyzer shown in Figure 8.46k is as follows. The light from the lamp is filtered to generate a *photoptic* light energy profile as described in connection with Figure 8.46b. The chopper wheel A_1 (with holes in it) is located at the focal point of the condenser lenses. The half-mirror beam splitter splits the light beam into measuring and reference light beam segments. By the use of the beam gating wheel (A_2), the measurement single is periodically gated, making the analyzer insensitive to variations in ambient light.

The reference beam is established and used as a continuous indication of the intensity of the unattenuated light source. When the measuring beam is allowed to pass through the stack, it traverses the distance to the retroreflector (R_2), thereby increasing measurement sensitivity as it passes

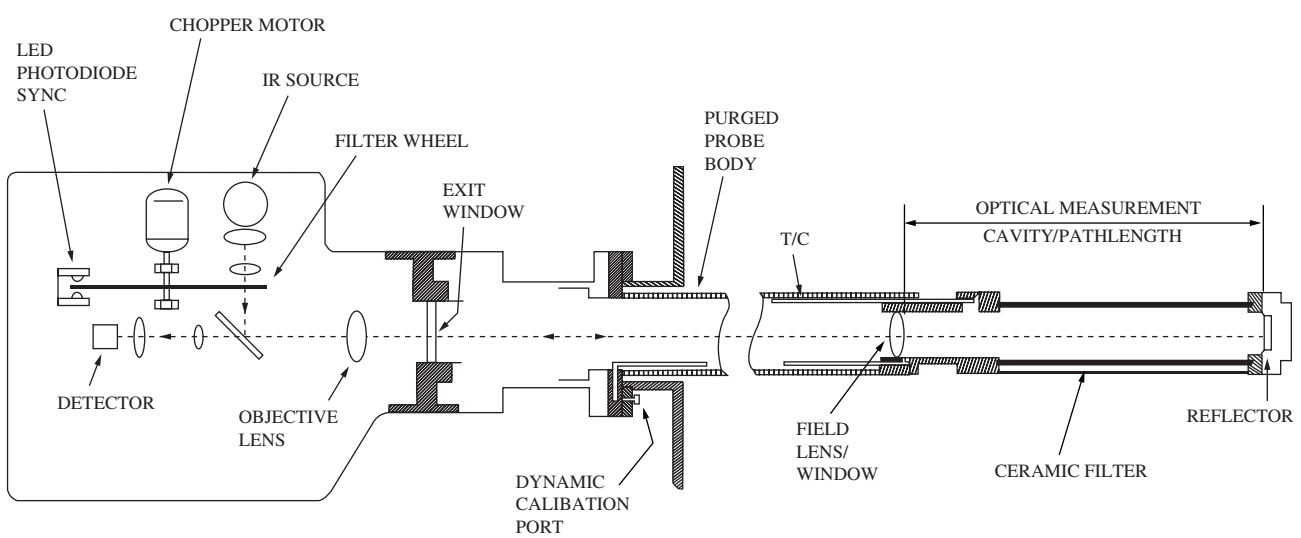

FIG. 8.46j
Stack gas monitor with ceramic diffusion cell.

© 2003 by Béla Lipták

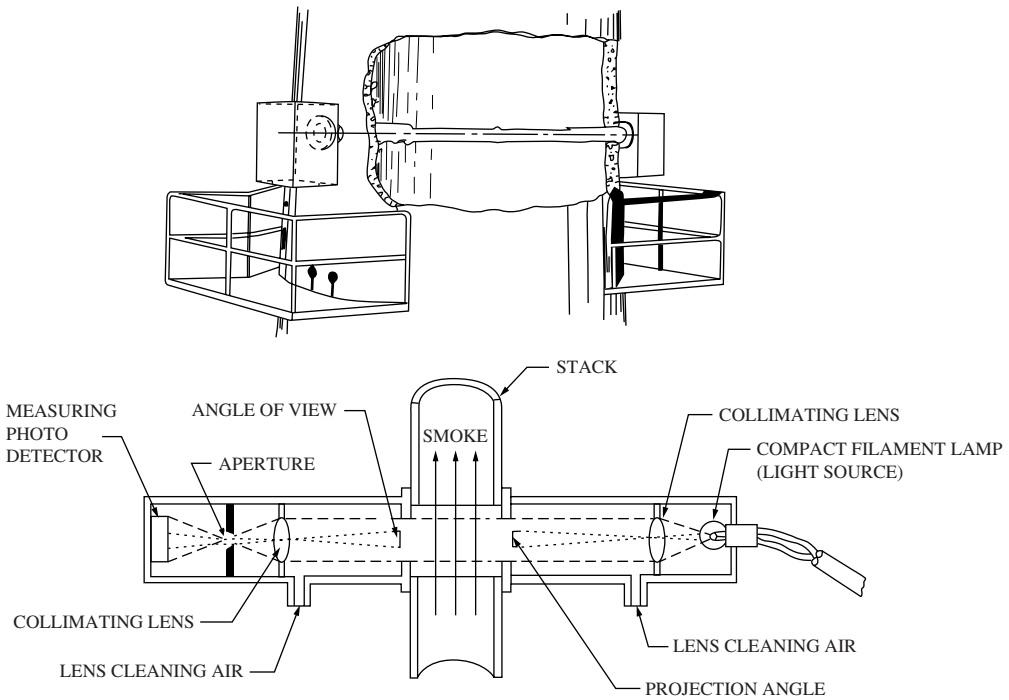

FIG. 8.46k

Single-pass transmissometer can detect smoke opacity. It is insensitive to minor alignment error or vibration but is affected by light again and by dirt building on the optics.[3]

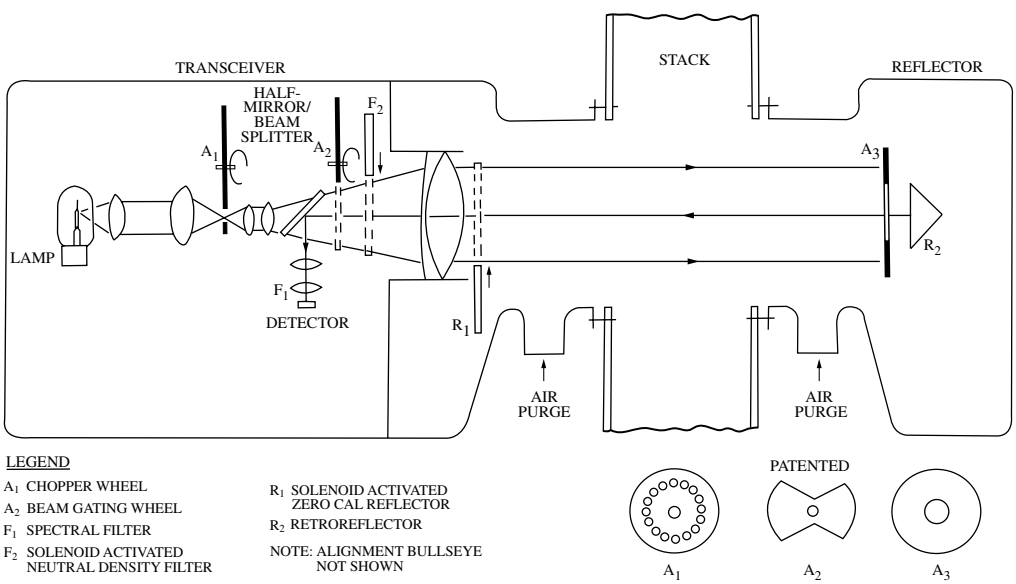

FIG. 8.46l

Double-beam, double-pass transmissometer. (Courtesy of Lear Siegler Corp.)

through the stack twice. The zero calibration reflector (R_1) is used to automatically rezero the instrument and thereby correct for dirt buildup on the windows; the neutral density filter (F_2) allows for span correction. The zero and span checks correct for lamp aging, dirt buildup, and drift. These checks can be performed automatically, under microprocessor control, once every hour.

Relative Performance Single-beam configurations (Figure 8.46k) essentially measure the detected light without compensation for changes in optics or in source or detector characteristics. Obviously, this is the simplest, most inexpensive, but least accurate technique.

Dual- or double-beam configurations (Figures 8.46j and 8.46l) internally split the light emitted from the source into

© 2003 by Béla Lipták

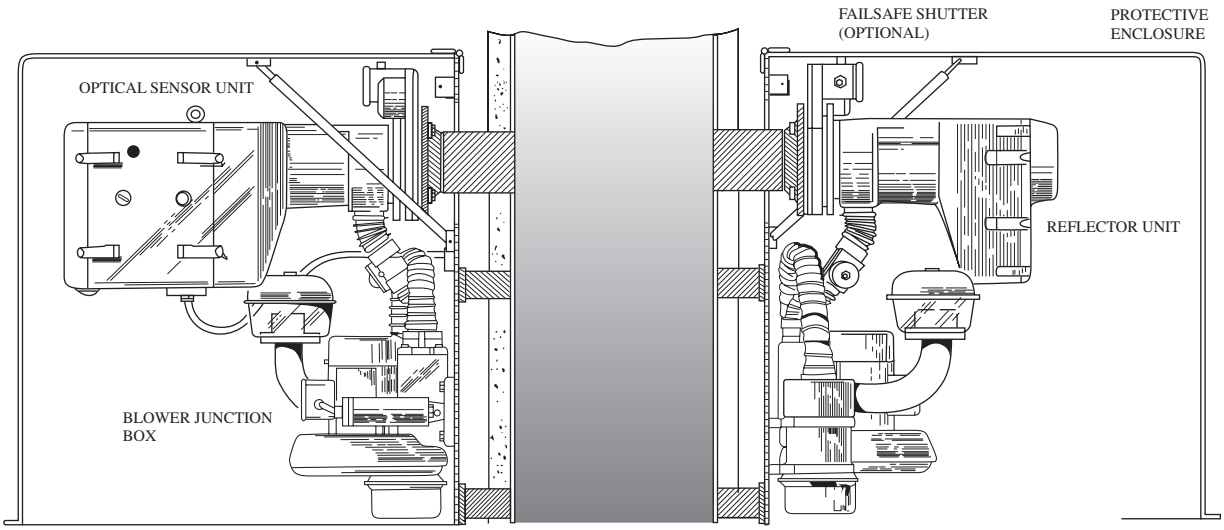

FIG. 8.46m
A 60 SCFM (1.7 m^3/min) fan is provided to provide a curtain of clean and cold air between the instrument and the gases in the stack. (Courtesy of Lear Siegler Corp.)

two beams. The measurement beam is projected through the optical medium of interest and is referenced to the second (reference) beam, which is totally contained within the instrument. If a separate detector is provided for each beam, as is done in so-called dual-beam configurations, compensation is continuously provided for light source variations. Furthermore, as long as the detectors for each beam are matched, only their differential errors appear in the overall measurement.

If the two beams can be modulated or time-sequentially gated into a single detector, automatic compensation is provided for both light source and detector variations, which is typical of the more advanced forms of double-beam measurement systems (Figure 8.46l). Measurement accuracy can be further improved by the regulation of lamp voltage supplies and by automatic control of reference light levels.

Optical Divergence The angles of both viewing and projection should be minimized to reduce the potential interference of scattered light. Most precision units exhibit less than 5° total angular divergence.

Spectral Characteristics The spectral response of the system determines its sensitivity to particulate size. Typically, the systems are matched to the photopic response of the light-adapted human eye so that the transmissometer sees exactly as does the human eye. This characteristic provides a peak response at 550 nm and provides a somewhat uniform response for particles as small as 0.3 μm. Longer wavelengths, such as 3.39 μm, can be used to provide more uniform response with respect to particle size as desired of a mass monitor.[7] Multiwavelength devices have been designed that provide some indication of relative particle size distribution.

Optical Characteristics Typically, the more modern and precise instruments also incorporate a chopped light system, which makes the instrument insensitive to variations in ambient light. Also, by providing a uniformly illuminated beam much larger than the reflector or detector and by using an autocollimated retroreflector technique, the overall system can be made essentially insensitive to variations in alignment such as those caused by temperature and wind. Alignment bullseyes are usually provided to facilitate installation and to allow proper alignment to be maintained.

Air Purge Nearly all stack-mounted systems are provided with a forced-air purge system, which ensures a curtain of clean air between the exposed optical surface and stack gas. These units include both an air filtration system and a blower (Figure 8.46m).

Manual Stack Samplers

Manual stack sampling techniques have been established by both the EPA and the American Society for Testing and Materials (ASTM). The stack sampling equipment required by the EPA technique designated as Reference Method 5 is shown in Figure 8.46n.[8]

This method uses an isokinetic sampling technique whereby the velocity of the sample gas being drawn into the probe is made equal to the velocity of the flue gas at the sampling point. Correspondingly, the sample probe assembly incorporates a sampling nozzle, an S-type pitot tube, and (usually) a thermocouple for sensing gas temperature. In practice, the operator draws samples from a variety of points within the stack cross-sectional area to minimize the effects of particulate and velocity stratification within the gas volume of interest. The probe is inserted or withdrawn manually from various access ports on the stack to achieve the desired sampling strategy.

© 2003 by Béla Lipták

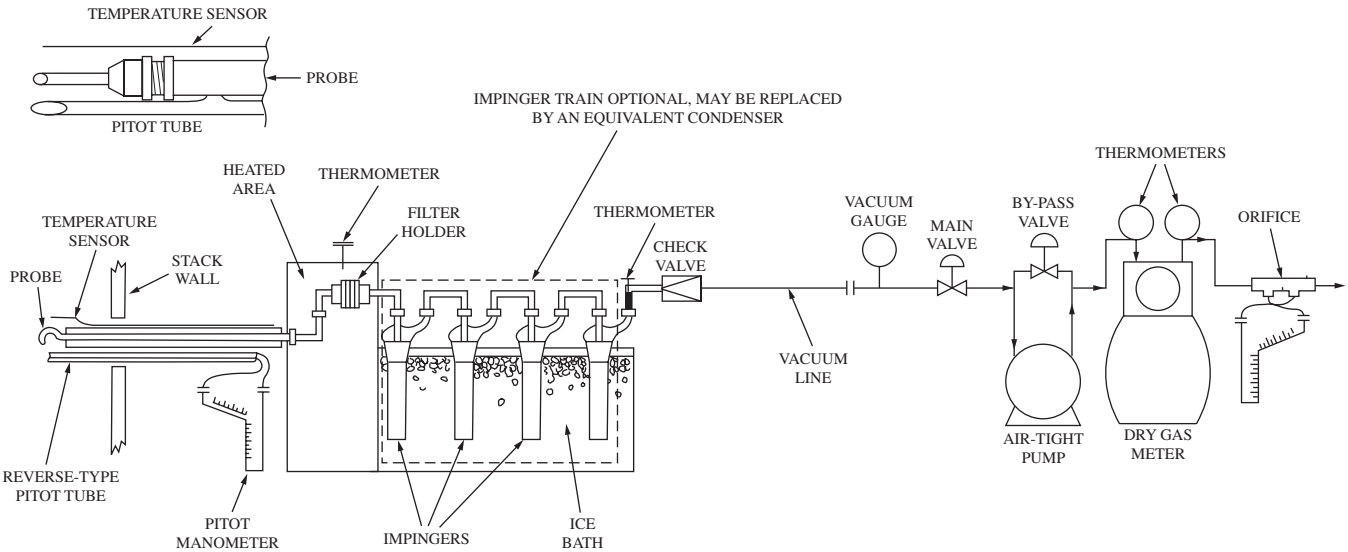

FIG. 8.46n
Manual stack sampler.

The probe is attached to an adjacent hot box where the particulate is separated from the gas on a filter paper and/or cyclone separator. After removal of particulate, the gas proceeds to a cold box where the gas is cooled to 32°F (0°C) by a series of ice bath-cooled impingers. The gas then flows through a heated umbilical to the control unit where the gas flow is controlled and timed. The stack gas velocity and temperature are also read out from this unit.

Automatic Stack Samplers As discussed earlier, a variety of options have been developed to make the system both easier to use and expandable to other gas measurements. Automatic microprocessor-controlled systems (Figure 8.46f) have been introduced that greatly reduce the required operator time and attention.

EPA Method 5 is one of the most widely used techniques available today and has been used to establish the data base for particulate-emitting stationary sources.

Broken Bag and Runway Visibility Sensors

Simplified transmissometer configurations are often used for detecting bag breaks in bag-house particulate control applications.[9] Transmissometers have also been widely used for highway visibility, runway visual range, highway tunnel, and roof vent monitoring. Exceptional accuracy and drift characteristics are required in such applications.

Typically, stack-mounted transmissometers are capable of up to 75-ft (22.5-m) separation, whereas visibility-monitoring units may have larger optics that provide path lengths of several hundred meters. For a more detailed discussion of open path spectrometry, refer to Section 8.40.

AMBIENT AIR OPACITY MONITORING

Particulate matter is the world's most ubiquitous air pollutant. Its natural sources include fires, volcanic action, vegetation, and the wind. Man-made sources include combustion, heating and abrasion processes, and material-handling activities, and these constitute another major source of the particulate burden on the atmosphere.

Airborne material can be measured as particulate matter in a wide range of sizes and characteristics, but larger sizes are limited as a result of the associated higher settling velocities. Small, inhalable particulate matter less than 15 μm in mass is the most damaging to human health. Consequently, techniques have also been developed to characterize and measure the size distribution of particulate matter (Section 8.47).

Particulate Concentration

Particulate material in ambient air is typically measured in terms of concentration, or weight per unit volume, although its presence may also be observed and measured in terms of visibility or light attenuation. The monitoring of air pollution has already been discussed in Sections 8.5 and 8.40.

Visibility as a measured variable is a much more complex parameter than particulate concentration, as it involves the characteristics of the human eye. In addition to light attenuation, visibility is a function of contrast and background luminance, which are required to establish visual range measurements of runways for airport applications.

Particulate matter generated by combustion can also be measured in terms of concentration, but it is often specified according to optical density or opacity, which are light-

© 2003 by Béla Lipták

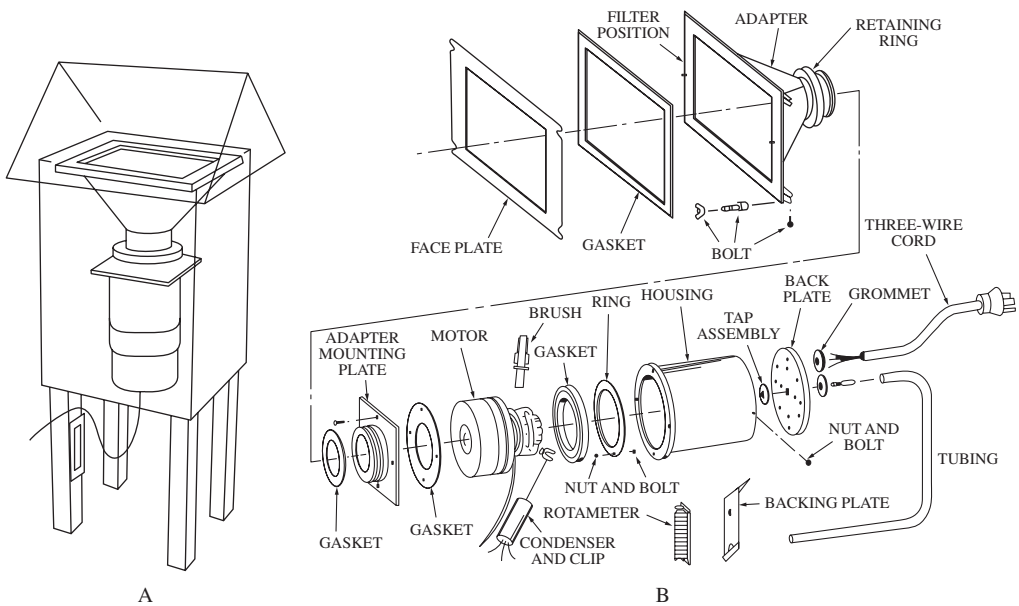

FIG. 8.46o
High-volume sampler. (A) Assembled sampler and shelter, (B) exploded view of typical high-volume air sampler.

attenuation measurements. Opacity of smoke plumes is often related to the visual effects seen by a human observer.

Particulate concentrations range from that corresponding to a visibility of 50 mi (80 km) to the nearly opaque smoke plume arising from a coal-fired boiler without particulate emission controls. To measure such a range of concentrations, a wide variety of techniques have been developed for such monitoring.

In situ techniques generally mean those that can be used to measure particulate concentration in place. *Extractive* techniques include those that remove a sample from the medium to be measured and transport that sample to the measuring instruments.

High-Volume Sampler

The basic instrument for determining the airborne concentration of particulate matter in the United States is the high-volume sampler (Figure 8.46o). The high-volume sampler provides data on the actual mass concentration of particulate matter in the air. A high-speed, multistage blower is used as the suction source. An adapter section allows the use of a flat 8 × 10 in. (203 × 254 mm) glass fiber filter. This filter has an efficiency of well over 99% for 0.3-μm particles.

An orifice plate is included on the back of the blower, which allows the monitoring of the airflow rate through the sampler. Twenty-four hours is a common sampling time period. During this period, the buildup of particles increases the filter resistance and decreases the airflow rate. When the decrease is small (e.g., less than 10%), the initial and final readings are averaged to determine the sampling rate.

If the decrease is significant, as might be expected in locations where the particulate concentration is high, it is desirable to use a recorder and determine the flow rate from that record. Alternatively, more precise measurements can be obtained by using instruments that include a self-regulating flow controller, which maintains a constant flow rate independent of filter loading.

The roof of the standardized sampling shelter has an annular opening sized so that particles larger than a nominal size of 100 μm are not drawn into the sampler. Because of the varying airflow rate and the effect of winds, this method provides only an approximation of a particle size. On the other hand, it can furnish a large body of ambient air quality data, and air quality standards have been promulgated based on the use of this standardized instrument.

EPA Air Quality Goals As shown in Table 8.46p, and as discussed in more detail in Section 8.5, the U.S. Environmental Protection Agency (EPA) has selected some ultimate air quality goals (secondary standards). These include that the maximum 24-hour concentration of particulates must not exceed 150 $\mu g/m^3$ more than once per year and that the annual geometric mean, as measured by the high-volume sampler, must not exceed 60 $\mu g/m^3$.[10]

Dichotomous Sampler

Subsequent to the EPA's promulgation of the total suspended particulate standards, efforts have been made to establish the health effects of particulates in relation to their size. As a result of these studies, further data have been collected on the harmful effects of inhalable particulates less than 15 μm in size. In concert with this regulatory activity, the dichotomous sampler has been developed to meet the need for size-specific particulate collection.

© 2003 by Béla Lipták

TABLE 8.46p
Secondary Air Quality Standards
(Levels of air quality that are deemed adequate to protect the public welfare from any known or anticipated adverse effects)

Pollutant	*Long-Term Concentration Level ($\mu g/m^3$)*	*Short-Term Concentration Level* ($\mu g/m^3$)*
Particulate	60—annual geometric mean	150—maximum 24-hr concentration
Sulfur dioxide	60 (0.02 ppm)—annual arithmetic mean	260 (0.1 ppm)—maximum 24-hr concentration
Carbon monoxide	—	10,000 (9 ppm)—maximum 8-hr concentration or 40,000 (35 ppm)—maximum 1-hr concentration
Photochemical oxidants	—	160 (0.08 ppm)—maximum 1-hr concentration
Hydrocarbons	—	160 (0.24 ppm)—maximum 3-hr concentration (6–9 AM)
Nitrogen dioxide	100 (0.05 ppm)—maximum arithmetic mean	

*Stated concentration not to be exceeded more than once per year.

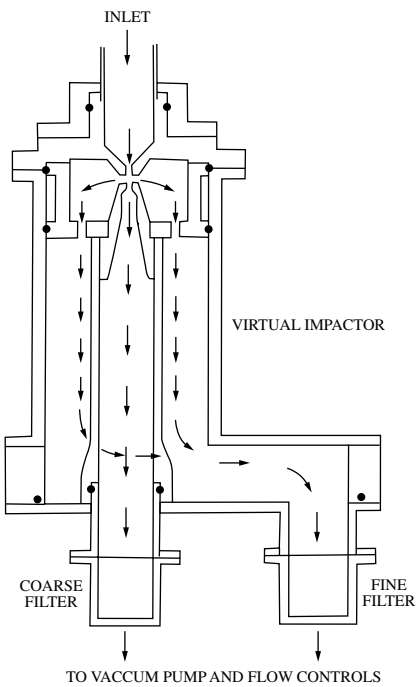

FIG. 8.46q
Virtual impactor.

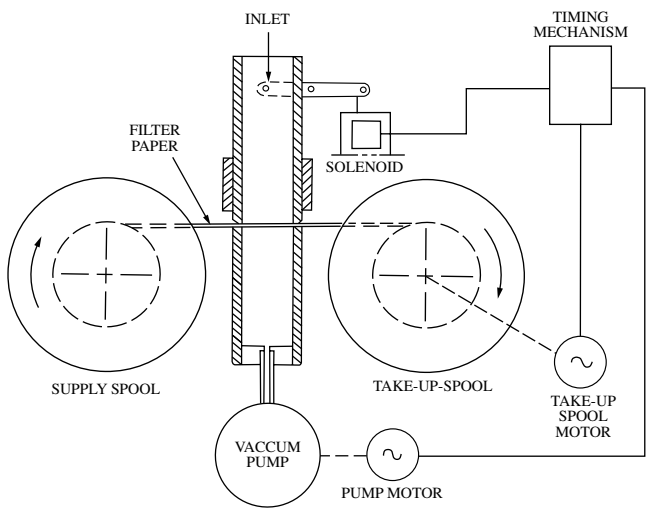

FIG. 8.46r
Tape sampler.

The dichotomous sampler is generally designed to remove the particulates that are greater than 15 μm at the very the inlet sampling and transport mechanism. The remaining sample stream is then segregated into two size-specific regions, hence the name *dichotomous*.

A virtual impactor (shown in Figure 8.46q) is often used to draw off particulates that are smaller than 2.5 μm. As shown in Figure 8.46q, two sample streams are created. When these streams are collected on filters, one yields the particulate in the 15 to 2.5 μm size range and the other in the $\leq$2.5 μm size range.

Filters are typically 1.46 in. (37 mm) in diameter and may be of either glass fiber or membrane construction. Flow rates are accurately controlled to ensure the stability of the size cut points. Both automatic and manual models are available. Automatic units also provide for the automatic changing of the filters after a preselected sampling time interval has passed. Filters are also often analyzed using x-ray fluorescence to determine the elemental composition of the particulate.[11]

Tape Sampler

The tape sampler (Figure 8.46r) provides an indication of the soiling properties of the sampled air. It operates by drawing air through a paper tape at a rate of about 0.75 actual cubic feet per minute (ACFM) for periods of one, two, or more hours. Both filter paper and membrane tapes have been used.

The soiling index (optical properties) of the filtered particulate is measured either by reflectance or transmittance. These optical measurements cannot be directly correlated with the mass concentration of particulate matter in the atmosphere except where particle size, shape, and color are constant and a series of comparative tests have been made using the high-volume sampler.

© 2003 by Béla Lipták

Soiling Index Soiling index results are expressed in coefficients of haze per 1000 linear feet (COH/1000 LF) for transmittance measurements and in reflectance units of dirt shade (RUDS) for reflectance measurements. Coefficient of haze (COH) units are defined as 100 times the optical density determined by transmittance.

The reflectance unit of dirt shade is defined as 100 times the optical density determined by reflectance. RUDS are expressed either in terms of 10,000 LF of air (American Society for Testing and Materials unit) or 1000 LF of air.

Some older tape samplers use an air pump, which is quite sensitive to system resistance. It is advisable to measure the airflow rate through both a clean spot and a dirty spot to determine whether an air volume correction to an average rate is advisable. The diameter of the spot is not a variable, because the results are expressed in terms of the length of the air column that is drawn through the spot.

Light Scattering

When light strikes a particle, it scatters as a function of the particle's size, shape, and color. Light scatter can be measured as forward scatter, angular scatter, or backscatter.

Suspensions of particulate matter in the air scatter the light in all directions. Sophisticated devices are available for determining the concentration of particles in air and the size of these particles. Laser-based scattering devices measure particulate concentration and/or particulate size distribution. Such devices appear to be particularly useful in evaluating the behavior of particulate control equipment. For an in-depth discussion of open path laser spectrometry, refer to Section 8.40.

Nephelometers The nephelometer has had some use in air pollution studies. This device measures the angular scatter of light over a wide range in a flowing air sample. The instrument measures the scattering coefficient, which is in inverse proportion to the visual range. Thus, the nephelometer can be used to obtain a point measurement of visual range. The span of measured range with the nephelometer is from approximately 1 to 100 mi (1.6 to 160 km).

In industrial applications, instruments based on the Tyndall effect have been built. These instruments (nephelometers) utilize the phenomenon that particles that are invisible when viewed directly in the path of a strong light become visible when viewed from the side. The reflected Tyndall light intensity is proportional to the number of particles in the path of the light. This analyzer consists of a cylindrical sample cell with two Tyndall windows at each end, with their common axis perpendicular to the path of the entering light.

Piezoelectric Crystal Mass Balance

Some crystals, when excited by an alternating current, exhibit a resonant frequency that is proportional to the crystal mass. Quartz is commonly used and is readily available for this purpose. This principle is used to continuously monitor the mass concentration of particulate matter in air by trapping particulate from the impinging air stream on the sensing crystal while keeping the reference crystal clean.

Thereby, the resonant frequency of the sensing crystal changes, and a beat frequency develops. The particle mass is determined based on the mass vs. the frequency response characteristics of the crystal. Commercially available quartz crystals show a frequency shift of 2000 Hz/μg of material deposited.

A major limitation is the deposition and retention of particles on the sensing crystal. Two techniques, impaction and electrostatic precipitation, have been used commercially. Both approaches have weaknesses in collecting and retaining particles over the wide size range encountered in atmospheric aerosols.

Impaction Devices

Determination of the particle size distribution in aerosols is frequently desired. Although light-scattering devices can provide an indication of particle size distribution, most atmospheric measurements are made using impaction devices. In principle, more inertial energy is required to impact small particles than large ones when they are impinged on a plane surface. This characteristic has been utilized through a series of impaction stages, with succeeding stages operated at higher velocities (Figure 8.46s).

The upper practical size limit for impaction devices is about 10 μm. They are particularly useful in the size range of 0.5 to 7 μm, which corresponds to the approximate size range of most particulate matter in the ambient air.

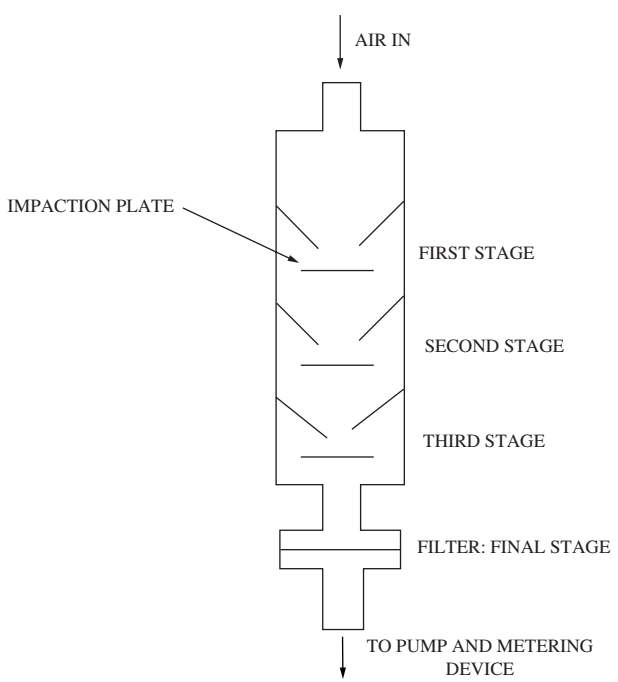

FIG. 8.46s
Impaction device schematic.

© 2003 by Béla Lipták

A cascade impactor can be added to a manual stack sampling probe to evaluate stack emissions, and a fractionating sampler can be added to a high-volume sampler for ambient air analysis. In most cases, the impaction plate is removed from the sampling device and is weighed to determine the amount of sample. High plate tare weight is a potential source of inaccuracy.

Calibration Calibration of impaction devices is difficult. The normal practice involves the generation of a mono-disperse aerosol of known particle size. Polystyrene spheres, such as manufactured for latex paint, have been used. Assuming that the dispersion technique generates a monodisperse aerosol (often the most difficult part of the procedure), the calibration is performed using a series of sizes. The calibration is in terms of aerodynamic size; that is, the inertial properties, which are a combination of particle size and specific gravity. The results from impaction sampling must state the specific gravity, whether measured or assumed, with the stated size distribution.

Radiometric Devices

Radiometric measurements of particulate are primarily accomplished using a radiation attention technique or by measuring the ionization effect of a radioactive source on ambient air. Typically, low-energy beta-type radioactive sources are used to minimize the human exposure considerations and associated regulatory problems.

In the typical beta gauge shown in Figure 8.46t, the air to be measured is drawn through a tape filter medium, where the particulate is collected. The radiometric transmission or attenuation of the filter medium is measured in the clean state (before collection) and in the dirty state (after collection). By appropriate processing of these two measurements, a measure is obtained that corresponds to the mass of collected particulate. The gas volume is usually accurately controlled so that the sample volume is precisely defined.

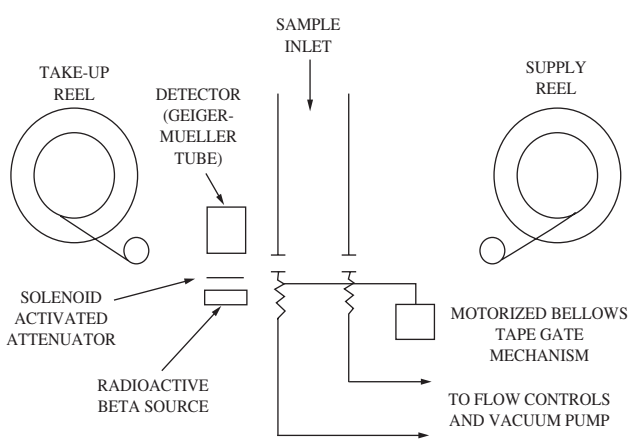

FIG. 8.46t
Beta-gauge particulate monitor.

The system is relatively insensitive to the normal chemical variation of particulate matter; however, it is especially responsive to hydrogen compounds. This technique has been widely applied to stack gas and ambient air measurements. The mechanical complexity and high costs, both the installed initial cost and maintenance costs, have limited the acceptance of these systems.

The ionizing technique has been applied to a variety of low-cost fire/smoke detectors. In this application, ambient air is exposed to a radiation source that partially ionizes the air molecules and allows a current flow through a pair of electrodes. As particulate concentrations increase, the radiation is absorbed as the particulate matter decreases the ionization and, hence, the current through the electrodes.

Charge Transfer (Triboelectricity)

Both of these techniques utilize an *in situ* probe exposed, typically, to the stack or flue gas stream of interest. Using the charge transfer technique, a measurement is produced by detecting the charge transferred to an electrode surface on impaction with particulate matter.

The charge transfer mechanism requires that only dissimilar materials be involved. The same holds for the triboelectric charging phenomena. With appropriate electronic amplification and scaling, the output can be related to particulate concentration. This technique has not gained wide acceptance, presumably because of the difficulty in correlating charge transfer with particulate concentrations and in keeping the probe mechanism operable under the severe and diverse operating conditions experienced in stack applications.

Surface Ionization

In the surface ionization technique, airborne particulate decomposes when it impacts a hot wire, and there is a resultant release of ions that are then collected on an electrode. By detecting both the average ion current and analyzing the pulse height and rate, this instrument is able to provide an indication of total mass concentration and the relative distribution of particle sizes, respectively.

This technique has a high sensitivity to low particulate concentrations. Both techniques are essentially point measurements that provide no averaging effect including the overall stack or duct cross-sectional area.[13]

Visual Observation

Human observation of smoke and dust was, of course, the initial stimulus to develop better techniques for control and monitoring. Human observation still remains one of the primary enforcement tools used by the Environmental Protection Agency (40 CFR 60 Appendix A, Reference Method 9) to ensure the proper operation and maintenance of particulate control equipment.

The EPA does provide training in smoke reading, and only certified observers are used for such enforcement activity.

© 2003 by Béla Lipták

Studies have been undertaken to quantify the errors of such measurement techniques, and human frailties certainly are involved in addition to the angle of the sun, the sky cover, contrast, type of particulate, and condensables such as steam.

Remote Sensing

Several techniques that enable an observer to monitor smoke plume characteristics from a remote location were discussed in Section 8.40. Telephotometers have been used manually to establish smoke plume opacity based on the luminance of the smoke plume as measured with different background characteristics.

Light direction and ranging (LIDAR) has been developed as a research tool using a laser to quantify smoke plume characteristics. LIDAR is relatively expensive and complex but has proven useful in the research environment. It is normally contained in a mobile laboratory that can be driven to remote locations so as to provide good observations of a particular smoke plume. Aircraft have also been equipped with proper instrumentation to permit observation and measurement of smoke plume characteristics while they are flown through the plume.

CONCLUSIONS

Particulate-monitoring methods have been developed that achieve high standards of accuracy and reliability. Under the impetus of the EPA, such methods have become widely used in the United States. Future developments are anticipated in the particle sizing area as regulatory agencies become less concerned with the visual effects of smoke and more concerned with its health effects. Visual effects, highway and airport visibility in particular, will continue to be of substantial interest as will the conditions of scenic vistas and parks.

References

1. *Particulate Continuous Emission Monitoring* (CD ROM), American Institute of Chemical Engineers, New York, 1999.
2. Beutner, H. P., Measurement of opacity and particulate emissions, *J. Air Pollution Control Assoc.,* September 1974.
3. *Implementation of Clean Air Act,* U.S. Government Printing Office, Washington, D.C., 1997.
4. U.S. EPA Technology Transfer, *Handbook — Continuous Air Pollution Source Monitoring Systems,* Environmental Protection Agency, Washington, D.C.
5. *Particulate Continuous Emission Monitoring* (CD ROM), American Institute of Chemical Engineers, New York, 1999.
6. Spellicy, R. L., Development and evaluation of a modular FT-IR monitor for industrial use, in *Proc. National Air and Waste Management Association (AWMA) Conf.,* Salt Lake City, UT, June 18, 2000.
7. Clarke, A. G., *Industrial Air Pollution Monitoring—Gaseous and Particulate Emissions,* Kluwer Academic, New York, 1997.
8. Code of Federal Regulations, Title 40, Part 60, Appendix A.
9. Saltz, J. and Cotler, L., Opacity monitoring technique predicts baghouse maintenance, *Pollution Eng.,* November 1978.
10. Code of Federal Regulations, Title 40, Part 50, Subchapter C.
11. Dzubay, T. G. and Stevens, R. K., Ambient analysis with dichotomous sampler and X-ray fluorescence spectrometer, *Environ. Sci. Technol.,* 9(7), July 1975.
12. Shofner, F. M., Kreikebaum, G., Schmitt, H. W., and Barnhart, B. E., *In Situ*, Continuous Measurement of Particulate Size Distribution and Mass Concentration Using Electro-Optical Instrumentation, Knoxville, April 1975.

Bibliography

Allard, D. and Tombach, I., Evaluation of visibility measurement methods in the eastern United States, APCA 80–29.3, Montreal, Quebec, 1980.

Annual Book of ASTM Standards, American Society for Testing and Materials, West Conshohocken, PA, 2002.

Beutner, H. P., Monitoring of particulate emissions from cement plants, *Rock Prod.,* May 1974.

Childers, J. W., Russwurm, G. M., and Thompson, E. L., *Instrumental parameters and their effect on open-path FT-IR data, Proc. 89th Annual Meeting and Exhibition of Air and Waste Management Association,* Nashville, TN, June 23, 1996.

Clarke, A. G., *Industrial Air Pollution Monitoring—Gaseous and Particulate Emissions,* Kluwer Academic, New York, 1997.

Conner, W. D., A comparison between in-stack and plume opacity measurements at oil-fired power plants, *Energy and Environmental—Proc. Fourth National Conference,* AICHE, Dayton, OH, 478–483, 1976.

Conner, W. D., *Measurement of the Opacity and Mass Concentration of Particulate Emissions by Transmissometry, Chemistry and Physics Laboratory,* EPA-650/2–74–128.

Conner, W. D. and Hodkinson, J. R., *Optical Properties and Visual Effects of Smoke-Stack Plumes,* two-dimensional printing, EPA Publication AP-30, Environmental Protection Agency, Washington, D.C.

Conner, W. D., Knapp, K. T., and Nader, J. S., *Applicability of Transmissometers to Opacity Measurement of Emissions Oil-Fired Power and Portland Cement Plants,* EPA-600/2–79–188, Environmental Protection Agency, Washington, D.C., September 1979.

Dennis, R., *Handbook on Aerosols,* TID-26608, USERDA, Oak Ridge, TN, 1976.

Ensor, D. S. and Pilat, M. J., Calculation of smoke plume opacity from particulate air pollution properties, *J. Air Pollution Control Assoc.,* 21, 496, 1971.

EPA's National Ambient Air Quality Standards, U.S. Government Printing Office, Washington, D.C., 1998.

Dubois, R. et al, The new sampling initiative, *Proc. 47th Annual ISA Analysis Division Symp.,* April 2002.

Farthing, W. E., Hussey, D. H., Smith, W. B., and Wilson, R. R., Sampling Charged Particles with Cascade Impactors, APCA 79–28.2, Cincinnati, OH, 1979.

Gregg, W., The use of inertial separators for sampling, *Proc. ISA/93 Technical Conf.,* Chicago, September 19–24, 1993.

Herget, W. F. and Conner, W. D., Instrumental sensing of stationary source emissions, *Environ. Sci. Technol.,* II(10), October 1977.

Hood, K. T. and Coron, A. L., The relationship between mass emission rate and observed plume appearances from Kraft recovery furnaces, 74-AP-08, Regional APCA Meeting, Boise, Idaho, November 17, 1974.

Implementation of Clean Air Act, U.S. Government Printing Office, Washington, D.C., 1997.

Instrumentation for Environmental Monitoring, Vol. 2, Lawrence Berkeley Laboratory, University of California, Berkeley, CA.

Lester, D. J., EPA requirements for stack monitors, *InTech,* February 1978.

Kagan, R. L., Fundamental principles of IR and UV spectroscopic air quality sensors: instrumentation, 89th Annual Meeting and Exhibition of Air and Waste Management Association, Nashville, TN, June 23, 1996.

Kosterev, A. A. et al., Thermoelectrically cooled quantum cascade laser based sensor for continuous monitoring of ambient atmosphere, *Appl. Optics,* 41(6), 2002.

© 2003 by Béla Lipták

Laznow, J. and Ponder, T., Monitoring and data management of fugitive hazardous air pollutants, *Proc. ISA Conference,* Houston, October 1992.

Liu, B. Y. H., Raabe, O. G., Smith, W. B., Spencer, H. W., III, and Kuykendal, W. B., Advances in particle sampling and measurement, *Environ. Sci. Technol.,* 1980.

Lodge, J. P., *Methods of Air Sampling and Analysis,* Lewis Publishers, Boca Raton, FL, 1988.

Loo, B. W., Jaklevic, J. M., and Goudling, F. S., Dichotomous virtual impactors for large scale monitoring of airborne particulate matter, presented at the Symposium on Fine Particles, May 1975.

McCain, J. D., Cushing, K. M., and Bird, A. N., Jr., *Field Measurement of Particle Size Distribution with Inertial Sizing Devices,* U.S. EPA-650&2–73–035, October 1973.

McMahon, T. K., The new sampling/sensor initiative, *Control,* August 2001.

Montagna, J. C., Smith, G. W., Teats, F. G., Vogel, G. J., and Jonke, A. A., *Evaluation of On-Line Light-Scattering Optical Particle Analyzers for Measurements at High Temperature and Pressure,* ANL/CEN/FE-77–7*,* Argonne National Laboratory, Argonne, IL, February 1978.

Myers, J. et al., Environmental Technology Verification Report, Opsis Inc. AR-500, *Ultraviolet Open-Path Monitor,* ETV Advanced Monitoring Systems Center, Battelle, Columbus, OH, September 2000.

NCASI, Application of Light transmissometry and indicating sodium ion measurement to continuous particulate monitoring in the pulping industry, Atmospheric Quality Improvement Technical Bulletin 79.

Osborne, M. C. and Midgett, M. R., Training and certification of smoke inspectors with transmissometers—a survey, APCA 78–11.6, Houston, TX, 1978.

Particulate Continuous Emission Monitoring (CD ROM), American Institute of Chemical Engineers, New York, 1999.

Phan, H. and Auth, J., Measurements of chemical emissions using FTIR spectroscopy, *Am. Laboratory News,* August 1993.

Schiff, H. I., et al., Innovative optical methods for air and emission monitoring, *Proc. First North American Conf. and Exhibition,* Emerging Clean Air Technologies and Business Opportunities, Toronto, CA, September 26, 1994.

Smith, D. et al., *EPA's Sampling and Analysis Methods Database,* Lewis Publishers, Boca Raton, FL, 1990.

Spellicy, R. L., Development and evaluation of a modular FT-IR monitor for industrial use, *Proc. National Air and Waste Management Association (AWMA) Conf.,* Salt Lake City, UT, June 18, 2000.

Spengler, J. D., Turner, W. A., and Dockery, D. W., *Comparison of Hi-Vol, Dichotomous, and Cyclone Samplers in Four U.S. Cities,* APCA 80–43.4, Montreal, Quebec, 1980.

Tate, J. D., Chauval, P., Taylor, K., Industrial applications of optical sensing, *Proc. 89th Annual Meeting and Exhibition of Air and Waste Management Assoc.,* Nashville, TN, June 23, 1996.

Weaver, R., Continuous Emissions Monitoring, *Meas. Control,* June 1992.

Weiss, M. D., Particles size analysis goes on line, *Control,* August 1990.

© 2003 by Béla Lipták

8.47 Particle Size and Distribution Monitors

R. A. HERRICK (1974) **A. WERTHEIMER** (1982)
B. G. LIPTÁK (1995, 2003)

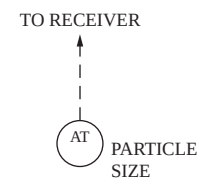

Flow Sheet Symbol

Measurement Technique:

A. Optical imaging
B. Electron imaging
C. Image analysis (with A or B)
D. Optical diffraction and laser scattering
E. Electrical resistance change
F. Sieving
G. Sedimentation (photo or x-ray)
H. Ultrasonic attenuation
I. Bulk property—absorption, permeability
J. Aerodynamic time of flight

Ranges:

A. Over 1.0 μm
B. 0.006 to 0.01 μm resolution
D. Laser scattering analyzer range covers from 0.02 to 2000 μm for air-suspended particles. For water-suspended particles, the minimum size is around 1 μm.
E. Over 0.5 μm
F. Usually >75 μm but, with careful design, down to a few microns
G. 1 to 100 μm
H. 25 to 600 μm

For continuous airborne particle counters: 0 to 10 million or 0 to 1 billion particles/cubic foot; ranges are selectable to count particles that are larger than 0.3, 0.5, 1, 3, 5, or 10 μm. Sensitivity can be as high as 1 mg/m^3, and particles down to microns are detected.

For on-stream particle-size monitors (dry powders or slurries), particle-size distribution data can be measured between 2 to 300 μm.

Inaccuracy:

5% (particle size distribution)

Costs:

A, E, G. $6000 to $18,000
B. $25,000 to $100,000
C. $40,000 to $80,000
D. $15,000 to $40,000
F, I. $1000 to $8000
H. $6000 for regular sludge densitometer, up to $50,000 for size distribution detection with referee method

Partial List of Suppliers:

Boreal Laser Inc. (D) (www.boreal-laser.com)
California Measurements Inc. (E) (www.californiameasurements.com)
Cilas Laser Particle Size Analyzers (D) (www.cilasus.com)
Climet Instruments Co. (D) (www.drugdiscoveryline.com)
Fisher Scientific (F, I) (www1.fishersci.com)
Horiba Instruments (D) (www.horiba-particle.co.uk)
Joyce Loebl (F) (www.joyce-loebl.co.uk)
Malvern Instruments (G, I) (www.malvern.co.uk)
Markland Specialty Engineering Ltd. (H) (www.sludgecontrols.com)
Norsk Elektro Optikk (D) (www.neo.no)

© 2003 by Béla Lipták

OPSIS (D) (www.opsis.se)
TSI Products (J) (www.tsi.com)
Unisearch Associates (D) (www.unisearch-associates.com)

INTRODUCTION

As is the case with many other sections in this handbook, the coverage of this section also overlaps with some of the others. Particle-size-based particulate separation has been discussed in Section 8.46, whereas optical and laser-type suspended solids detection is also discussed in Section 8.60.

This section starts with a discussion of the subject of particle size distribution. After that, the designs of the various laboratory-type particle monitors are described. These units are classified according to sample size into small (a few 0.01 g in the sample), intermediate (a few grams), and large (a few 100 g) units. The last topic in this section is a discussion of continuous, on-line particle-size analyzers.

PARTICLE SIZE AND DISTRIBUTION

When the purpose of measurement is to monitor clean rooms, semiconductor production facilities, and other atmospheres that are kept clean by HEPA filters, the analyzers must be able to detect particles down to 0.3 μm in size and must be sensitive down to the concentration of 1 mg/m^3.

When the purpose of the measurement is product quality control in dry-powder or slurry processes (e.g., pigments, catalysts, clays, cements, and plastic powders), the analyzers provide data on both particle size distribution and cumulative (percent smaller than) data in the range of 3 to 200 μm (Figure 8.47a).

Application Objectives

Accurate determination of particle size and distribution is critical in many industrial processes, such as grinding, agglomeration, crystallization, and emulsification. Objectives may include improving final product quality, as in ceramics, paints, and pigments; improving final product performance, as in abrasives and catalysts; improving process efficiency, as in crystallization and wastewater treatment; or minimizing energy consumption, as in grinding of ore for subsequent processing. In many processes, more than one of these objectives may be involved.

This section discusses the range of particle size measurement from approximately 0.01 to about 1000 μm. The goal of these measurements is determining the quality of material in a process rather than the detection of contaminants in an otherwise particle-free stream. The performance characteristics noted in this section are attainable from standard commercial instruments.

Detectors and Sampling Systems

Particle size detectors differ in measurement principles and in size range, resolution, and concentration capabilities. Choosing the right measurement principle for the parameter of interest is important, but, irrespective of the method used, the reported particle size can also be affected by other factors such as shape or physical properties. Therefore, it is important to understand the critical particle characteristics for a particular process before the method of measurement is selected.

Accurate size measurement also depends on obtaining a representative sample of the bulk material. Bias toward smaller or larger sizes can occur if sampling is done at the wrong place or time in the process, or if a sample is extracted from a settled heap. The size measurement will be of value only if the sample represents the process.

The amount of material required for the analysis depends on the measurement technique. In some processes, it can be difficult to obtain a representative sample when only a small fraction of the collected material is inspected. One of the criteria by which particle size measuring techniques are classified is the amount of material inspected.

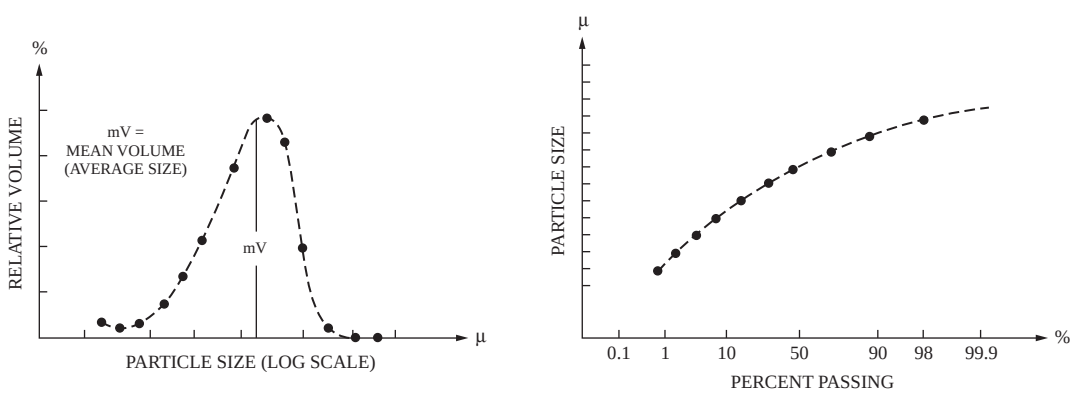

FIG. 8.47a
Typical displays of particle size distribution.

© 2003 by Béla Lipták

LABORATORY MONITORS

From the perspective of sample size, the measurement technique can use small (a few hundredths of a gram), intermediate (a few grams), or large (hundreds of grams) amounts of sample material. These three categories will be separately discussed in the following paragraphs.

Sensing Small Samples

Optical Microscopy Optical microscopy is often used as a standard method for particle size analysis to calibrate other particle-sizing instruments. Size determination is based on the operator's criteria and judgment of parameters such as the longest dimension, the diameter of a sphere of equivalent cross section, and so on. When there is a large range of particle sizes, many particles must be counted to convert a number distribution to a weight distribution.

Size resolution is limited by the wavelength of light, which restricts the practical use to particles that are larger than about 1 μm. The depth of the field, or the region in which an object is in sharp focus, decreases as the magnification is increased. Size errors can arise from out-of-focus imagery, especially with spherical particles.

Electron Microscopy In this case, a fine electron beam is scanned across a sample, producing secondary electrons and other emissions from the material. The emissions are detected and displayed on a cathode ray tube to form an image, such as in a TV picture.

Operator interaction and judgment are required to determine the size. The size resolution is limited by the energy of the electron beam, and 0.006 to 0.01 μm resolution is typical for modestly priced equipment. Depth of field of the image is about 300 times greater than in the case of optical microscopy. However, a common source of error is in the evaluation of too few fields of particles.

Image Analyzers Automating the analysis of the image of a particle field reduces much of the tedium of counting large numbers of particles. Sophisticated electronic routines, augmented by an editing pointer, provide for rapid and error-free analysis of complex shapes. The input to an image analyzer is a high-resolution TV camera. Therefore, this technique must be combined with another device, such as an optical or electron microscope.

Electrical Sensing (Coulter Principle) When this method is used, the sample is suspended in an electrolyte, and the particles are drawn through a small orifice that is immersed between two electrodes. Each particle, as it passes through this orifice, displaces its own volume of the electrolyte and produces a momentary resistance change in proportion to the volume displaced.

The pulses are then amplified, scaled, and separated into counting bins. Some level of training and skill is required to obtain good reproducibility, but, with such skill, high resolution can be achieved for narrow distributions. The size range is determined by the orifice diameter. For very broad distributions, blockage of the orifice can be troublesome, and different orifice sizes must be used to cover the full range. The practical lower particle size limit is around 0.5 μm.

Optical Scattering (Single Particle) When a light beam interacts with a particle, light is scattered or diffracted. The angular distribution and amount of scattered light depend on the particle size. The passage of individual particles generates scattered-light pulses, which are detected as they pass a probe beam. These pulses are assigned to counting bins according to their sizes.

The dynamic range of the electronics used will limit the size range, and the measurement accuracy is influenced by the composition of the particles, which are less than a few micrometers in size. The lowest size commonly measured is about 1 μm for a water-suspended material and a few tenths of 1 μm for an air-suspended material. Low signals for small particles and coincidence at high sample concentrations are the principal limitations.

Sensing Intermediate Samples

Light Scattering (Multiple Particle) When many particles are viewed by a light beam at the same time, a composite scattering pattern is generated. Several algorithms have been developed to extract the size distribution information from this scattering pattern.

By using low-angle scattering and optical analog filtering, the Microtrac approach generates a signal in proportion to the volume of material present in the light beam. The volume size histogram is calculated through a microprocessor program. By adding signals collected at high angles, which are used for measuring particle sizes under 1 μm, the range obtained by this technique can cover from 0.1 to 1000 μm.

Resolution is lower than for single-particle analysis. Inaccuracy is a function of composition effects for particles below a few micrometers, but no special training or skill is needed to make the measurement. Material can be suspended in either air or liquid. Other instruments also exist that utilize intermediate-size samples and operate on principles of forward scattering, but they are limited to particles larger than 1 μm.

Sedimentation (Photo and X-Ray) Photo sedimentation combines gravitational settling with optical attenuation. The sorting of the particles is based on their hydrodynamic properties, and sizing is based on the cumulative particulate cross section as a function of settling time. Care must be taken to avoid too rapid settling, convection currents, and improper or incomplete correction for optical scattering variations as a function of size and composition.

Photo sedimentation is limited to the size range of 1 to 100 μm. By replacing the optical beam with a well collimated x-ray beam, this range can be extended to cover particles of a few tenths of 1 μm in size. Centrifugal sedimentation is also useful in this submicrometer size range.

© 2003 by Béla Lipták

Sensing Large Samples

Sieving This method is best suited to particle sizes that are predominantly coarser than 75 μm. In the sieving operation, the sample is shaken through a series of containers whose bases have regularly spaced, uniform-sized openings. The primary measure is the mass of material retained in each sieve, and the distribution is most often plotted as cumulative fraction vs. the nominal sieve aperture.

Several sieve series exist, including Tyler and the American Society for Testing and Materials (ASTM) in the United States, and British and German standards in Europe. Fixed ratios of sizes of square root or fourth root of 2 are common.

For particles smaller than about 75 μm, sieving becomes difficult. Problems include the increased cost of producing sieves with uniform apertures and the greater sophistication required of the mechanics of the sieving process. Wet, sonic, and air-jet sieving have all been used for this range, and, with care, particles down to a few micrometers can be handled.

Optical Methods Laboratories can also use transmissometry (light absorption across a sample), turbidity detection (light scattered at 90° to the light beam), and backscattering techniques, but because all three of these methods are also sensitive to particle size and composition changes, they are best suited for on-line monitoring of process streams.

Ultrasonic Attenuation When ultrasonic energy is transmitted through a slurry (Figure 6.7b), the amount of energy absorbed is dependent on the particle size, concentration, and ultrasonic frequency. In one approach, two pairs of sensors, each consisting of a transducer and a receiver, operate at two different frequencies.

For a given material, a correlation can be established between the size distribution as measured by a referee method and the attenuation of the higher-frequency beam. Corrections resulting from loading changes are based on the lower-frequency signal. This technique is restricted to particles between 25 to 600 μm, but high concentrations can be accommodated, which makes this approach attractive for on-line control. Entrained air bubbles can cause errors, so they must be avoided or eliminated.

ON-LINE MEASUREMENT

Particle size analysis for industrial process control is especially valuable if the measurement can be rapid and continuous. The fully automated system can be complex, even if the size measurement technique is simple.

Optical Multiple-Particle Analyzer

As an example of a complete system, Figure 8.47b illustrates the a package that includes components designed to extract

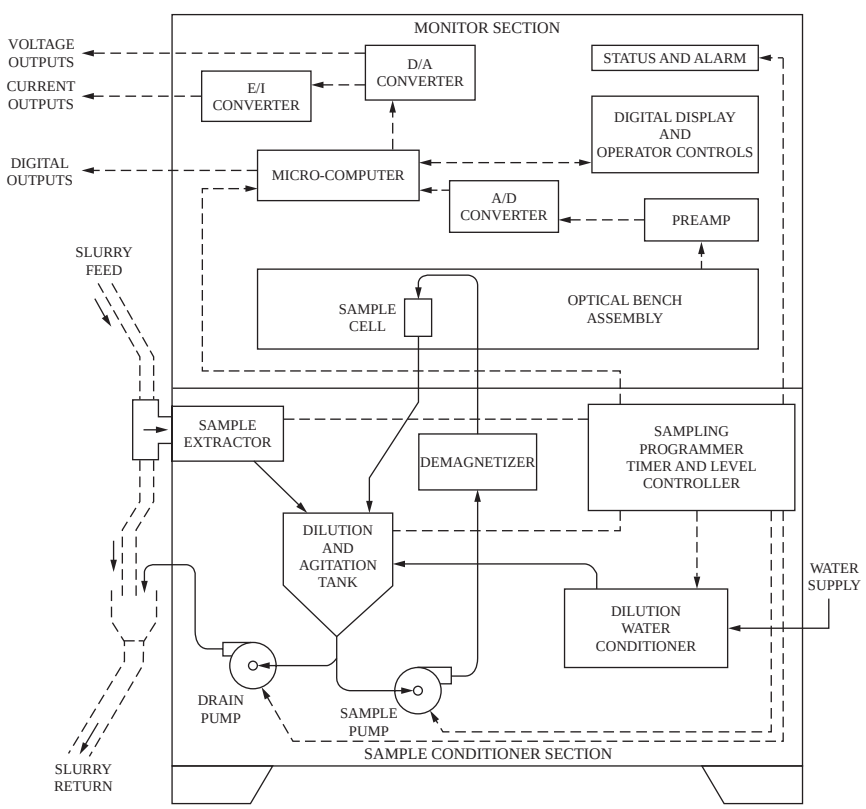

FIG. 8.47b
Block diagram of complete system for outline process control using an optical particle analyzer.

© 2003 by Béla Lipták

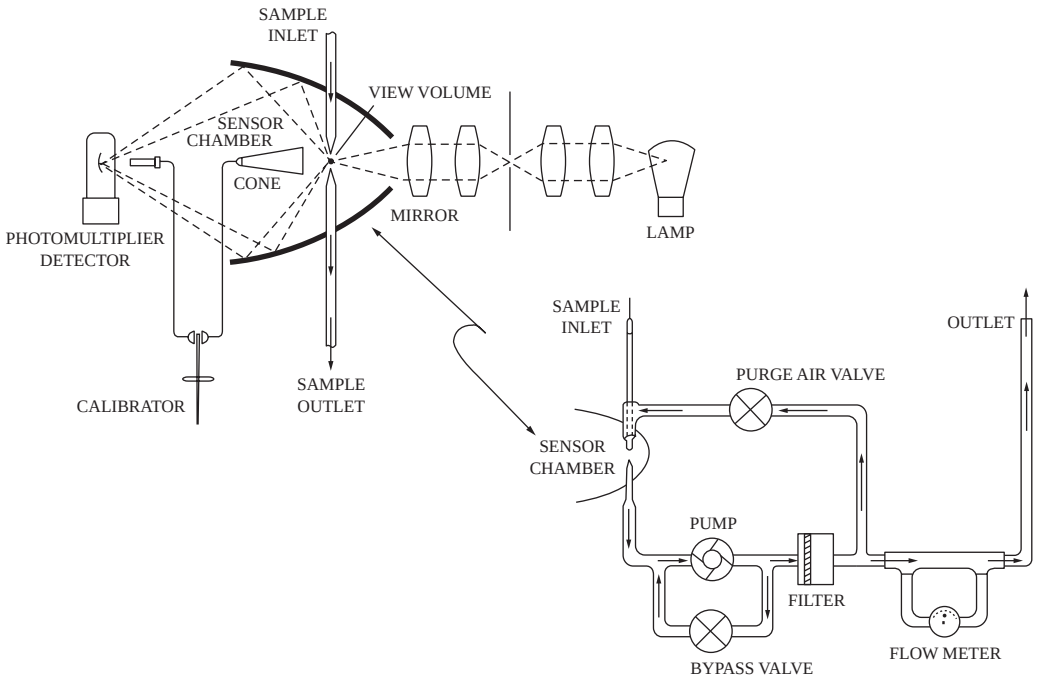

FIG. 8.47c

The elliptical-mirror-type airborne-particulate counter is used in clean rooms and is available with automatic sampling. (Courtesy of Climet Instrument Co.)

a sample, measure the particle size through an optical multiple-particle analyzer, and report a specific measurement of the distribution for control.

As shown in Figure 8.47b, in the first step of an analysis cycle, water is charged into a mixing chamber through a debubbling circuit that prevents the air bubbles from the entering water. A circulating pump then agitates the water in the mixing chamber and circulates it through the sample cell, where the laser beam detector of the monitoring section is located.

When the slurry extraction by the sample extractor is actuated, a particulate sample is drawn and deposited into the mixing chamber. The circulating water carries the particles of the slurry through the sample cell. At the end of the measurement cycle, the mixing chamber is drained, rinsed, and refilled with water in preparation for the next sample.

The analyzer is capable of operating with wet slurry or with dry powder samples, and successive samples can be analyzed every few (2 to 15) min. The sample size is between 3 and 10 g, and the results are printed or displayed on particle size distribution curves (Figure 8.47a). The analyzer consumes about 1.5 gal (6 li) of water per cycle and 4.2 SCFH (120 l/h) of air. The range of the analyzer is 0 to 200 μm, with 2.8 μm being the minimum reading.

Airborne-Particulate Counter

Figure 8.47c illustrates the elliptical-mirror-type airborne-particle counter used in sizing and classifying powdered products or in inspecting the performance of HEPA filters, which are widely used in clean rooms.

The unit operates with a 0.25 SCFM (1 lpm) sample, which is directed to the focal point of its elliptical mirror, where the focused incident light is scattered by the particles in the sample. The scattered (Tydall) light is collected by the elliptical mirror and is focused onto the photomultiplier detector.

Because the mirror completely surrounds the particles in the sample, it collects more light energy and therefore is capable of detecting smaller and fewer particles. The minimum particle size it is capable of detecting is about 0.3 μm, and the unit can operate at particle densities of up to 10 million particles/ft^3 (353 million particles/m^3).

The air sampling system includes a positive-displacement pump and a pressure regulator (Figure 8.47c). The return air from the sensing chamber is filtered by an absolute filter and is reused as purge air. This purge air fills the sensor chamber and also surrounds (sheathes) the sample airstream to prevent the particles in the sample from entering the sensor chamber.

Bibliography

Annual Book of ASTM Standards, American Society for Testing and Materials, West Conshohocken, PA, 2002.

Allen, T., *Particle Size Measurement*, Chapman and Hall, London, UK.

Brassington, D. J., Tunable diode laser absorption spectroscopy for the measurement of atmospheric trace species, *Adv. Spectroscopy*, 24, 83–148, 1995.

Clarke, A. G., *Industrial Air Pollution Monitoring—Gaseous and Particulate Emissions*, Kluwer Academic, New York, 1997.

© 2003 by Béla Lipták

EPA's National Ambient Air Quality Standards, U.S. Government Printing Office, Washington, D.C., 1998.
Herdan, G. and Smith, M. L., *Small Particle Statistics*, Elsevier, New York, 1953.
Implementation of Clean Air Act, U.S. Government Printing Office, Washington, D.C., 1997.
Lodge, J. P., *Methods of Air Sampling and Analysis*, Lewis Publishers, Boca Raton, FL, 1988.
Particle Size Distribution in the exhaust of Diesel and Gasoline Engines, Society of Automotive Engineers, Warrendale, PA, 2000.
Particulate Continuous Emission Monitoring (CD ROM), American Institute of Chemical Engineers, New York, 1999.
Prouder, T., *Particle Size Distribution III*, American Chemical Society, Washington, D.C., 1998.
Smith, D., et al., *EPA's Sampling and Analysis Methods Database*, Lewis Publishers, Boca Raton, FL, 1990.
Tate, J. D., Chauval, P., Taylor, K., Industrial applications of optical sensing, *Proc. 89th Annual Meeting and Exhibition of Air and Waste Management Assoc.*, Nashville, TN, June 23, 1996.
Weaver, R., Continuous emission monitoring, *Meas. Control*, June 1992.
Weiss, M. D., Particles size analysis goes on line, *Control*, August 1990.
Wertheimer, A. L., Frock, H. N., and Muly, E. C., Light scattering instrumentation for particulate measurements in processes, *SPIE*, 129, 1977.

© 2003 by Béla Lipták

8.48 pH Measurement

A. C. BLAKE (1969) **T. S. LIGHT** (1972)
D. L. HOYLE, T. J. MYRON (1974, 1982) **G. K. McMILLAN** (1995)
J. R. GRAY (2003)

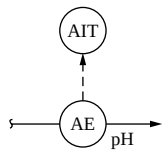

Flow Sheet Symbol

Standard Design Pressures:	Vacuum to 100 PSIG (7 bars); special assemblies to 500 PSIG (35 bars)
Standard Design Temperatures:	Generally, 23 to 212°F (–5 to 100°C); sterilizable, –22 to 266°F (–30 to 130°C); Glasteel, (<5 pH) 23 to 284°F (–5 to 140°C)
Materials of Construction:	Electrode hardware: stainless steel, monel, Hastelloy,® titanium, epoxy, Kynar,® halar, polyvinyl chloride, chlorinated polyvinyl chloride, polyethylene, polypropylene, polyphenylene sulfide, Ryton,® Teflon,® various elastomer materials
Assemblies:	Flow-through, submersion, insertion, and retractable
Cleaners:	Ultrasonic, jet washer (chemical and water), and brush
Inaccuracy:	Electrodes 0.02 pH; lab meters and displays 0.01 pH; transmitters 0.02 mA; installation effects 0.2 pH
Range:	0 to 14 pH
Costs:	Electrodes cost $100 to $500 (Glassteel is $2000); lab meters, $200 to $800; transmitters, $500 to $2000; assemblies, $200 to $1000; automatic cleaners, $500 to $2000 or more; the fiber-optic unit in Figure 8.48n costs from $15,000 to $25,000.
Partial List of Suppliers:	ABB (www.abb.com) Analytical Technology Inc. (www.analyticaltechnology.com) Advanced Sensor Technologies Inc. (www.astisensor.com) Broadley James (www.broadleyjames.com) Custom Sensors and Technology (www.customsensors.com) Electro-Chemical Devices (www.ecdi.com) Endress + Hauser (www.endress.com) The Foxboro Company (www.foxboro.com) +GF+ Signet (www.gfsignet.com) GLI International (www.gliint.com) Hach Co. (www.hach.com) Hamilton Co. (www.hamiltoncompany.com) Honeywell (www.honeywell.com) Horiba Instruments, Inc. (www.horiba.com) Knick (www.knick.de) Mettler-Toledo (www.mt.com) Osmonics Lakewood (www.osmonics.com) Pfaudler Inc. (www.pfaudler.com) Phoenix Electrode Co. (www.phoenixelectrode.com) Rosemount Analytical (www.rauniloc.com) Sensorex (www.sensorex.com) TBI-Bailey Controls (www.tbi-bailey.com) Thermo Orion (www.thermo.com) Thornton (www.thorntoninc.com) Van London Co. (www.vanlondon.com) Yokogawa (www.yca.com) Most popular are Rosemount Analytical, Yokogawa, and Hach Co.

© 2003 by Béla Lipták

INTRODUCTION

The pH detectors belong to the family of ion-selective electrodes, so the reader is advised to refer also to Section 8.28 in this chapter, which discusses the general topic of ion-selective electrodes.

One of the important considerations in the design of pH systems is the means by which the probes are kept clean. Probe cleaners are also discussed in other sections of this chapter, so the reader might also refer to Figures 8.1m, 8.1p, and 8.41i in addition to Figures 8.48u, 8.48x, and 8.48z for the description of various probe-cleaning designs.

Measurement Error

The pH measurement error in process applications is an order of magnitude larger than the normally stated electrode error, which is a result of varying glass surface conditions, dissociation constants, streaming potentials, concentration gradients, and diffusion or liquid junction potentials of actual installations.

Optimistic users and suppliers who provide one electrode per point in the process may believe that they have achieved accuracies of 0.02 pH or better. Results of installations with three electrodes per point in the process show that the inaccuracy over a month is at best 0.25 pH and can be obtained only after frequent process calibration adjustments. In fact, if all three electrodes agree within a tenth of a pH for more than a few minutes in an industrial application, it indicates that the electrodes are probably coated, broken, or still have protective caps on them.[1]

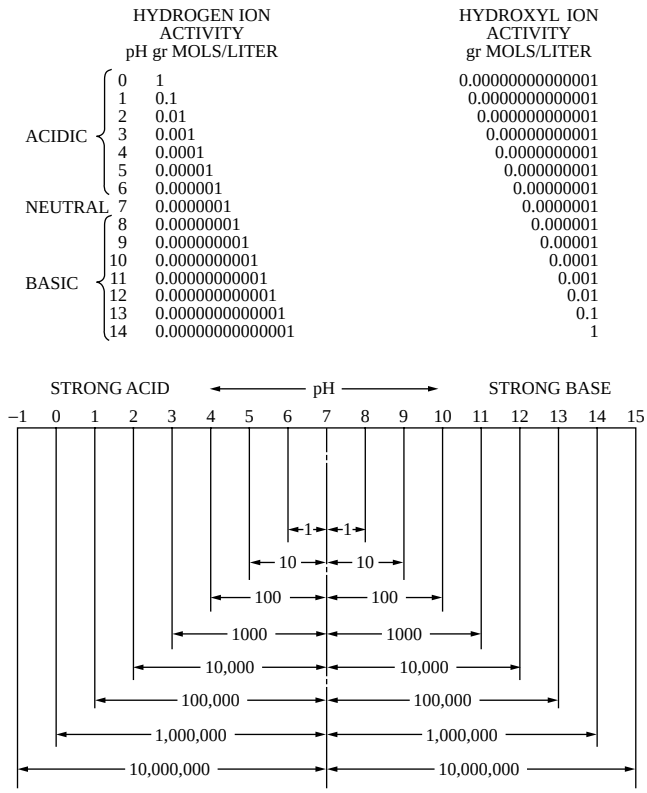

GRAPH OF REAGENT DEMAND. REAGENT ADDITION UNITS ARE 10^{-6} MOLS/LITER.

FIG. 8.48a
The logarithmic nature of pH.

Measurement Range

The measurement of pH covers an incredibly wide range of extremely dilute acid and base concentrations (Figure 8.48a). For strong acids and bases, it can track changes from one to one millionth of a percent.[2] Thus, pH can be used as a sensitive indicator of deficient and excess acid and base reactant concentrations for chemical reactors and scrubbers.

For example, a few millionths of a percent of excess of sodium hydroxide (a strong base) is needed for chlorine destruction with sodium bisulfite. pH measurement is used to reduce sodium hydroxide addition to its bare minimum and still ensure complete use of sodium bisulfite.

Applications

In addition, pH measurement is used to correct the inference of hypochlorite concentration from an oxidation-reduction potential (ORP) measurement (Section 8.41). Since ORP curves drastically shift with pH, the use of ORP to infer the concentration of oxidizing or reducing species must be accompanied by an accurate pH measurement.[3]

Biological reactors use acids and bases to supply food to or neutralize the waste products of organisms. Cells are extremely sensitive to pH fluctuations. Genetically engineered bacteria tend to be weak and need particularly tight pH control. Thus, pH is critical to cell growth rate, enzyme reactions, and extraction of intercellular products.[4]

The sensitivity of cells to pH has even wider significance in that any food, drink, or drug ingested or injected, and any waste discharged to the environment, must have pH specifications to prevent damage to living matter and ecological systems. Stricter environmental regulations have increased the number and importance of pH measurements. Some environmental regulations have instantaneous limits on pH. An excursion outside the acceptable range for a fraction of a second can be a recordable violation.

The pH measurement system must be designed to prevent violation indications from spurious readings due to installation effects. For most discharges, the acceptable range lies between 6 and 9 pH. To ensure that a surface impoundment can be declassified (nonhazardous), the pH of all entering streams must always be between 2 and 12.5 pH.[5]

Whereas materials of construction are generally less sensitive to pH than are living cells, a range of pH must be maintained to prevent corrosion of metals or disintegration of plastics. Intermediate pH control is often needed to prevent damage to vessels, piping, and instrumentation.

© 2003 by Béla Lipták

THEORETICAL REVIEW

In pH measurement systems, a pH responsive glass takes up hydrogen ions and establishes a potential at the glass surface with respect to the solution. This potential is related to the hydrogen ion activity of the solution by the Nernst relationship,

$$E_g = E_g^o + \frac{2.303RT}{F}\log_{10}a \qquad \textbf{8.48(1)}$$

where

E_g = sum of reference potentials and liquid junction potentials, which are constants (in millivolts)
E_g^o = potential when a = 1
a = hydrogen ion activity
T = absolute temperature in kelvins (°C + 273)
R = 1.986 calories per mol degree
F = Faraday (coulombs per mol)
2.303 = logarithm conversion factor

The process variable pH is the negative logarithm of the hydrogen ion (i.e., proton) activity.

$$pH = -\log(a_H) \qquad \textbf{8.48(2)}$$

If both sides of the equation are multiplied by −1, and the definition of an antilogarithm is used, the result shows that the hydrogen ion activity is equal to 10 raised to the negative power of pH. The lowercase p designates the mathematical relationship between the ion and the variable as a power function; the H denotes the ion is hydrogen.

$$a_H = 10^{-pH} \qquad \textbf{8.48(3)}$$

For dilute aqueous (water) solutions, the activity coefficient is approximately unity, and the hydrogen ion concentration is essentially equal to the hydrogen ion activity. As the concentrations of acids, bases, and salts increase, the crowding effect of the ions reduces the hydrogen ion activity. Thus, an increase in salt concentration can cause an increase in pH reading, even though the hydrogen ion concentration is constant.

An acid is a proton donor, and a base is a proton acceptor. When an acid dissociates (breaks apart into its component ions), it yields a hydrogen ion and a negative acid ion. When a base dissociates, it gives a positive base ion and a hydroxyl ion that is a proton acceptor. When water dissociates, the result is both a hydrogen ion (proton) and hydroxyl ion (proton acceptor).[6]

Thus, water acts as both an acid and a base. Neutralization is the association of hydrogen ions from acids and hydroxyl ion from bases to form water. The following equations show the dissociation (forward arrow) and association (backward arrow) of an acid, base, and water, respectively.

$$HA = H^- + A^- \qquad \textbf{8.48(4)}$$

$$BOH = B^+ + OH^- \qquad \textbf{8.48(5)}$$

$$H_2O = H^- + OH^- \qquad \textbf{8.48(6)}$$

TABLE 8.48b

Concentrations of Active Hydrogen and Hydroxyl Ions at 25°C at Different pH Values (in Gram-Moles/Liter) and Some Examples of Fluids That Have Corresponding pH Values

pH	Fluid Example	Hydrogen Ions	Hydroxyl Ions
0	4% Sulfuric Acid	1.0	0.00000000000001
1		0.1	0.0000000000001
2	Lemon Juice	0.01	0.000000000001
3		0.001	0.00000000001
4	Orange Juice	0.0001	0.0000000001
5	Cottage Cheese	0.00001	0.000000001
6	Milk	0.000001	0.00000001
7	Pure Water	0.0000001	0.0000001
8	Egg White	0.00000001	0.000001
9	Borax	0.000000001	0.00001
10	Milk of Magnesia	0.0000000001	0.0001
11		0.00000000001	0.001
12	Photo Developer	0.000000000001	0.01
13	Lime	0.0000000000001	0.1
14	4% Sodium Hydroxide	0.00000000000001	1.0

The product of the hydrogen and hydroxyl ion concentrations in water solutions is equal to 10 raised to the negative power of pK_w where K_w is the water dissociation constant.

$$[H^+][OH^-] = 10^{-pK_w} \qquad \textbf{8.48(7)}$$

Ion Concentrations

At 25°C, pK_w is 14, and the product of the hydrogen and hydroxyl ion concentrations is 10^{-14}. This relationship is shown in Table 8.48b for the pH range of 0 to 14. This means that a pH measurement can track 14 decades of hydrogen ion concentration and detect changes as small as 10^{-14} (at 14 pH). The concentration changes of strong acids and bases also follow the decade change per pH unit within this range. No other concentration measurement has such rangeability and sensitivity. This has profound implications for pH control.[7]

Concentrated strong acids and bases have a pH that lies outside this range. For example, concentrated sulfuric acid has a pH of −10, and concentrated sodium hydroxide has a pH of 19 as measured by a hydrogen electrode. However, the set point of a pH loop is usually well within the 0 to 14 range.

Some feed-forward pH loops might need measurements outside this range, but the shortened life expectancy and increased error from the electrode at the extremes of the range make such measurements impractical. When the nominal pH value is expected to be near the extremes of the 0 to 14 pH range, conductivity (Section 8.17) is usually a better measurement choice for detecting acid and base concentrations.

The neutral point is where the hydrogen ion concentration equals the hydroxyl ion concentration. At 25°C, this

© 2003 by Béla Lipták

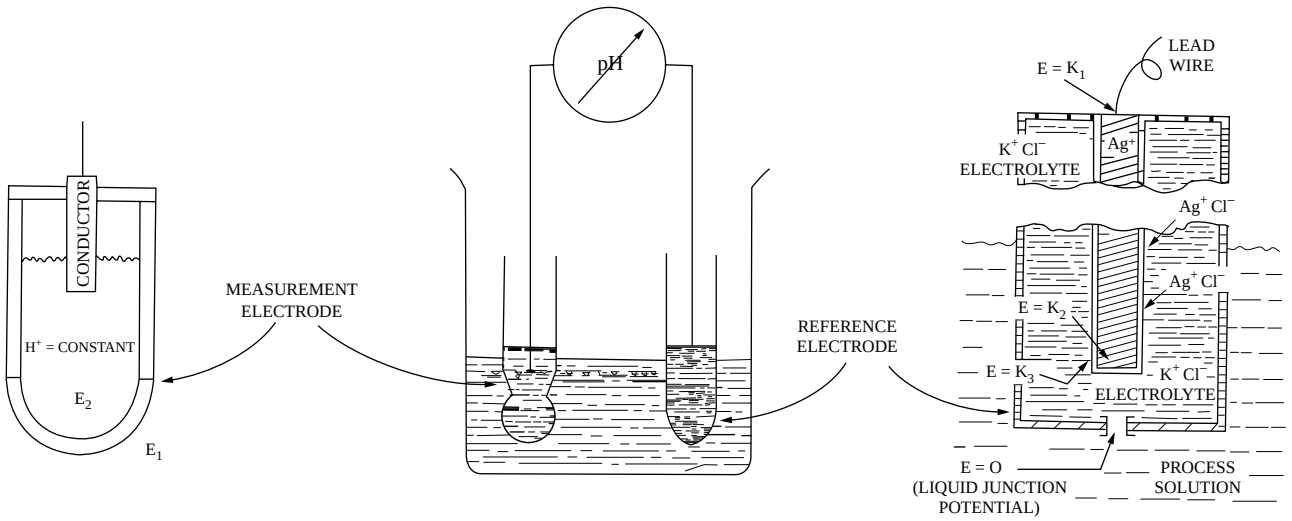

FIG. 8.48c
The traditional configuration of a glass measurement electrode and a flowing junction reference electrode.

occurs at 7 pH. However, the pK_w decreases by about –0.35 pH per 10°C. A decrease in temperature will raise the neutral point and the pH reading of alkaline solutions, even though the concentration of acids and bases is constant. For example, a stream with strong electrolytes will change from 8 to 11 pH as it cools down from 90 to 25°C.[8]

Temperature compensators correct for the change in millivolts per pH unit per the Nernst equation but do not correct for this change in the actual pH of the solution with temperature. Since the change in pH readings with temperature of solution pH changes is often larger than that per the Nernst equation, microprocessor-based pH transmitters have added algorithms for solution pH correction.

pH MEASUREMENT

The hydrogen ion does not exist by itself in aqueous solutions. It is associated with a water molecule to form a hydronium ion (H_3O^+). The glass measurement electrode (Figure 8.48c) develops a potential when hydronium ions get close enough to the glass surface for hydrogen to jump and become associated with hydronium ions in an outer layer of the glass surface as illustrated in Figure 8.48d.

This thin hydrated gel layer is essential for electrode response. The input to the pH measurement circuit is a potential difference between the external glass surface that is exposed to the process (E_1) and the internal glass surface that is wetted by a 7 pH solution (E_2). If the external glass surface is in exactly the same condition as the internal glass surface, the Nernst equations simplify to the following equation, where the potential difference in millivolts is proportional to the deviation of the process pH from 7 pH at 25°C.

$$E_1 - E_2 = 0.1984 * (T + 273.16) * (7 - pH) \qquad \textbf{8.48(8)}$$

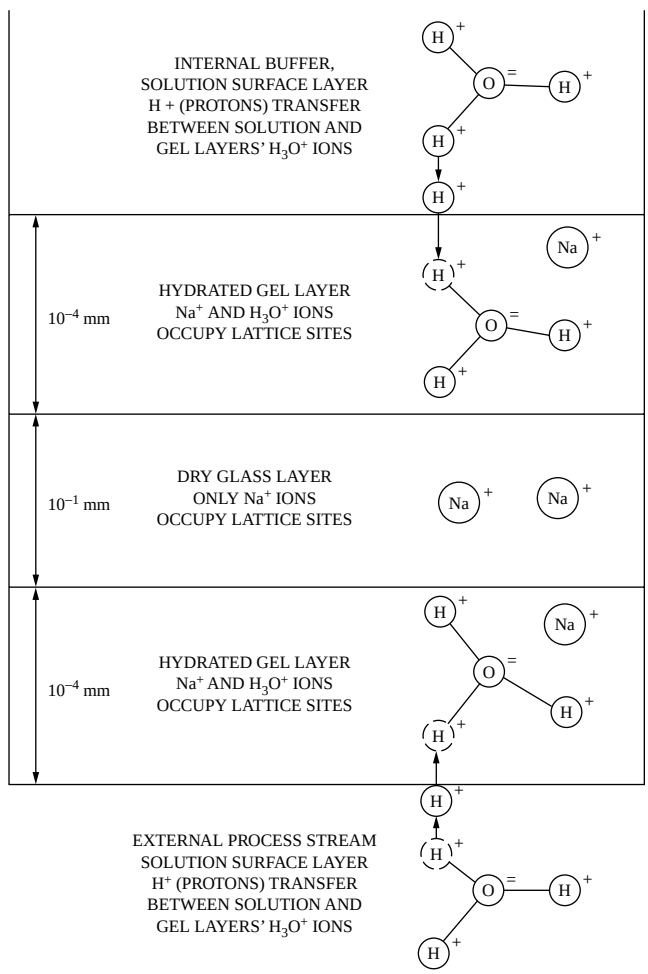

FIG. 8.48d
Functional layers of the glass membrane.

© 2003 by Béla Lipták

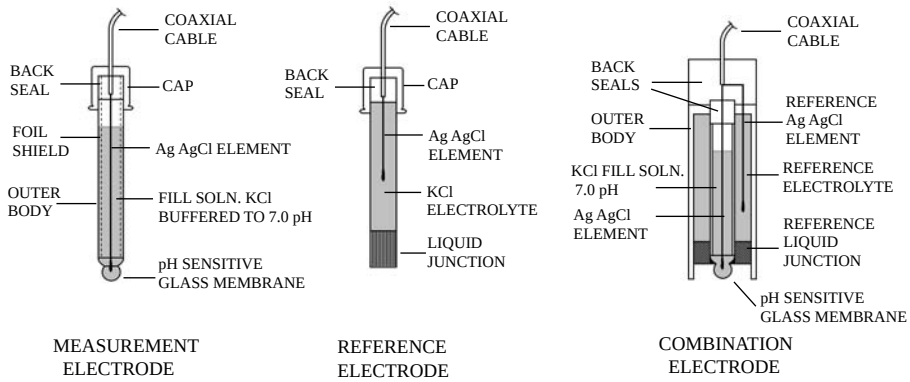

FIG. 8.48e
Basic electrode configurations.

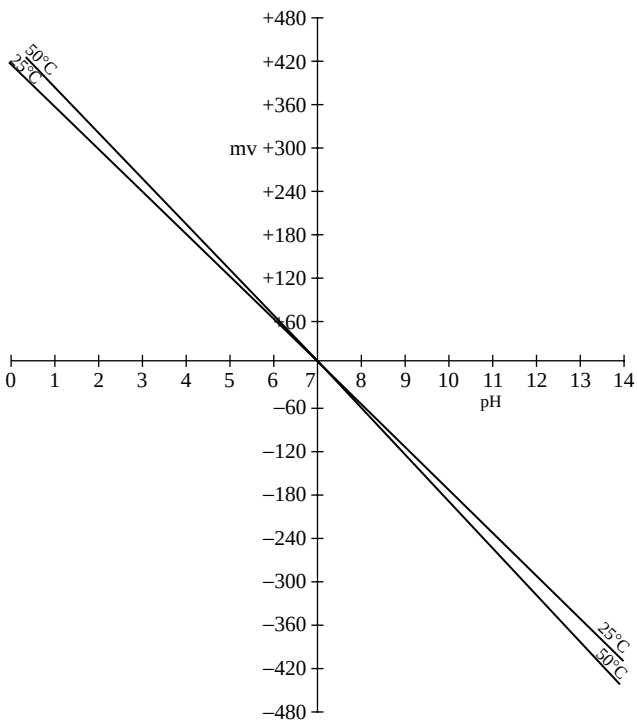

FIG. 8.48f
Nernst temperature effect on millivolts vs. pH.

The basic components of measurement, reference, and combination electrodes are shown in Figure 8.48e.

Temperature Effects

Change in the process temperature in kelvins changes the millivolts generated in an amount proportional to the deviations from 7pH, as shown in Figure 8.48f. When the process is 7 pH, the millivolt potential is zero, and temperature has no effect on the number of millivolts.

The point of zero temperature effect is called the *isopotential point*, which depends not only on the temperature effect on the pH electrode but also on the temperature effect on the reference electrode. The actual isopotential point will change with temperature as a result of changes in the condition of the external gel layer from dehydration, abrasion, etching, and contamination.

Conventional temperature compensation circuits correct the millivolts only for the Nernst temperature effect and assume that the isopotential point is fixed at 7 pH. Some microprocessor-based transmitters provide an adjustable isopotential point. This is particularly important for nonglass measurement electrodes.

The isopotential point is obtained by differentiating the equation for the entire pH measurement cell, which includes both the pH electrode and the reference electrode, setting the result to zero, and solving for the isopotential pH. The $E^0(T)$ terms in this equation include the potential inside the glass electrode, which consists of the inside surface of the glass electrode and its internal silver–silver chloride wire, and the reference electrode.

$$E(T) = E^0(T) + [dE^0(T)/dT] * (T - 298.16) - 0.1984 * (pH) \quad \textbf{8.48(9)}$$

pH Electrodes and Sensors

Most glass measurement electrodes use bulbs. Various shroud designs (Figure 8.48g) are used and represent a compromise for the conflicting goals of bulb protection from breakage and abrasion and bulb exposure to flow to ensure a representative reading and prevent areas of stagnation and material buildup.

The standard design has slots or holes to allow the flow of process around the bulb. Recessed shrouds are used for pulp and abrasive applications. The recessed area can get clogged or caked up and cover the bulb and reference junction. When the material breaks loose, it can take the bulb with it. A tapered shroud creates eddies that help keep the electrode surfaces clean.

Flat Glass Electrodes Flat glass electrodes have been developed to minimize glass damage and maximize a sweeping

© 2003 by Béla Lipták

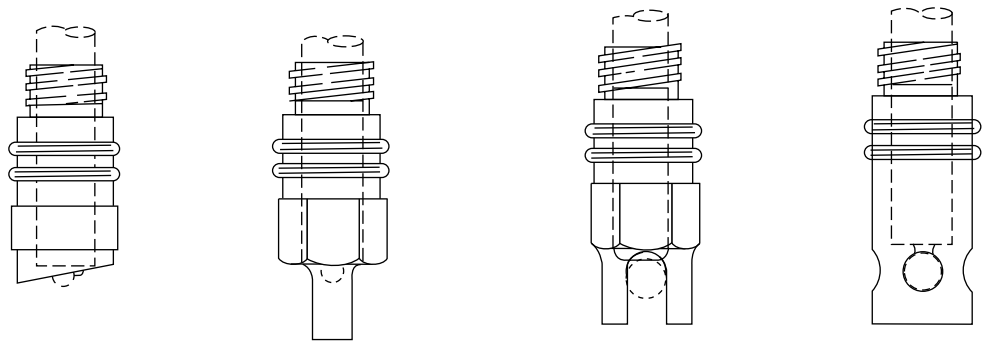

FIG. 8.48g
Various shroud designs. (Courtesy of Electro-Chemical Devices.)

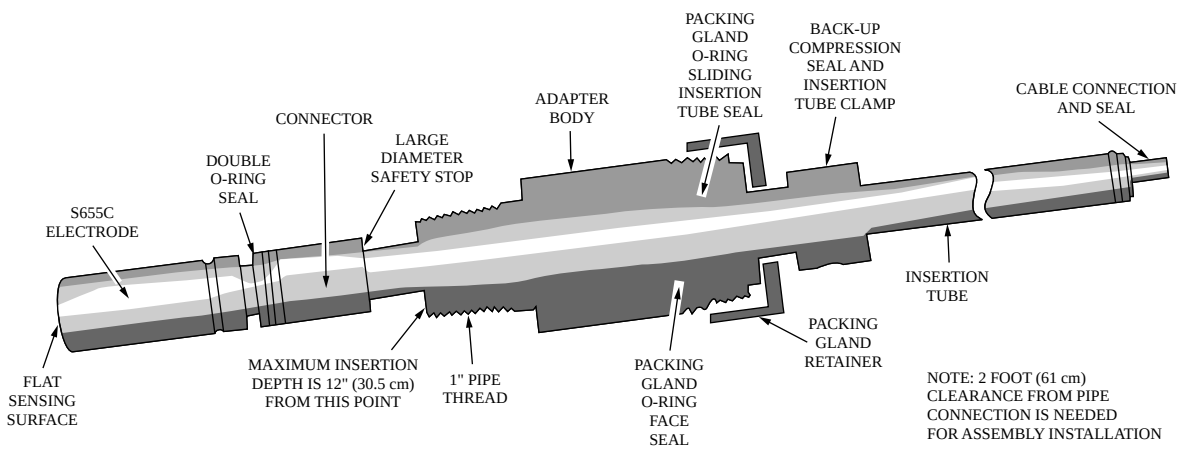

FIG. 8.48h
Flat glass probe. (Courtesy of Sensorex.)

action to prevent fouling. The usable pH range of flat glass electrodes is often lower than bulb electrodes. The stated range of small button electrodes is 0 to 10 pH, and that of large flush flat glass electrodes, illustrated in Figure 8.48h, is 2 to 12 pH.

High sodium ion concentrations and low hydrogen ion activity (alkali error) can also have a larger effect on flat glasses, which lowers their upper pH range limit.

Some manufacturers offer several different glass formulations that are tailored to a process application. Figure 8.48i shows the temperature and pH range for four different types of glass. Figure 8.48j illustrates how lower alkali error improves accuracy above 10 pH.

Higher glass impedance normally corresponds to higher resistance to chemical attack from strong bases (e.g., sodium hydroxide) and strong acids (e.g., hydrochloric acid). Thick and flat glass is more abrasion resistant, but low-impedance glass must be used, which reduces its chemical resistance.

In the late 1980s and early 1990s, progress was made in reducing the impedance of sodium ion and chemical-resistant glass so it could be used at temperature as low as 5°C. In general, the specifications of a manufacturer's glass formulation should be checked against the needs of the pH application.

Glasteel Pfaudler has patented a measurement electrode made of Glasteel,® a unique material formed by the fusion of glass and steel (Figure 8.48k). The probe has greater structural endurance, greater corrosion resistance, and a higher temperature rating (140°C below 5 pH) as depicted in Figure 8.48l.

This probe is designed to withstand the rigors of heat, pressure, and dynamic agitation in reactors. It needs a modified or microprocessor-based transmitter, because its zero potential point lies between 1 and 3 pH. The cost of the Glasteel electrode is much higher than that of any other pH electrode.

Metal Oxide pH Electrodes Before the glass measurement electrode was developed for industrial measurements, the antimony electrode was used. Antimony is a hard and brittle material. The electrode responds to pH by surface oxidation. Because oxidant accumulation on its surface deteriorates the accuracy and repeatability of the measurement, periodic cleaning is necessary.

The electrode's response is nonlinear and requires narrow calibration spans or special polynomials for adequate accuracy. The measurement range is reported to be 3 to 8 pH by

© 2003 by Béla Lipták

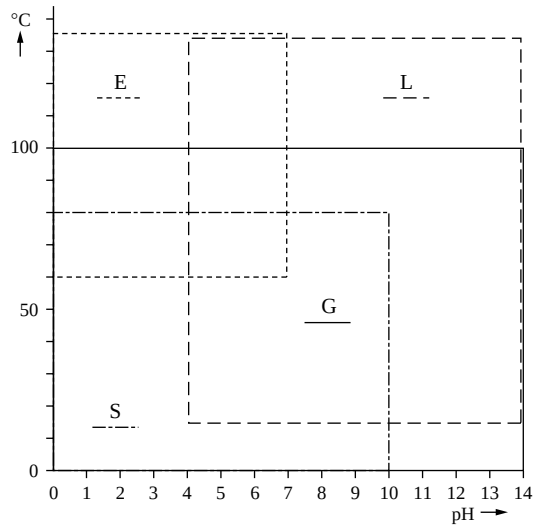

"G" glass: used for membranes of electrodes in processes where the nominal pH value varies around pH 7; wide application range, also termed "general purpose" glass.
"L" glass: application is for measurements in alkaline media with high process temperatures.
"E" glass: application is for measurements in acid media; also suitable for use at higher process temperatures.
"S" glass: low ohmic glass for use at lower temperatures and for acid media; at higher pH values, the alkaline error may be significant.

FIG. 8.48i
The temperature and pH ranges of four types of glass. (Courtesy of Yokogawa.)

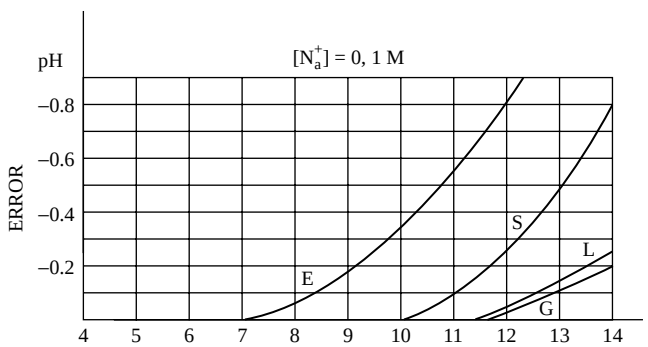

FIG. 8.48j
The alkaline errors of four species of glass. (Courtesy of Yokogawa.)

some and 3 to 11 pH by others. This sensor is very temperature sensitive. The millivolt output, which is approximately 50 mV per pH unit, will increase from 1 to 3 mV/°C as the pH increases.

The isopotential point is near 2 pH, so modified or microprocessor-based transmitters are required for temperature compensation. Yet another limitation is that antimony is also an oxidation-reduction potential (ORP) electrode. Therefore, it will respond to oxidizing and reducing species, and its reading will be affected by as little chlorine as a fraction of a ppm.

Antimony is usually used as a last resort. It has been used in applications where abrasion from slurries or etching from hydrofluoric acid causes glass measurement electrode failures. It cannot be used in the food, beverage, or pharmaceutical applications because of its toxicity. In recent years, work has been conducted toward developing glass electrodes with resistance to high concentrations of hydrofluoric acid, which, if fruitful, will eliminate many antimony electrode applications.

Other metal oxide electrodes have been evaluated for use as pH electrodes. Iridium oxide in particular was given considerable focus as a possible substitute for the conventional glass

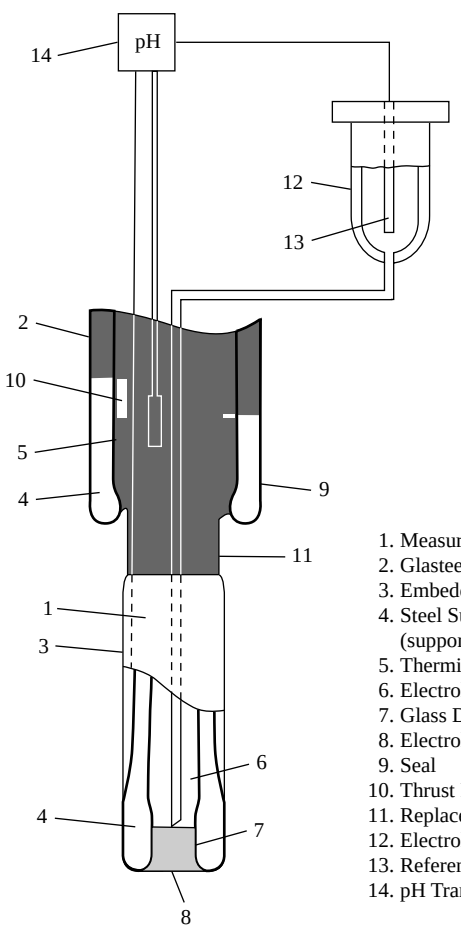

1. Measuring Electrode
2. Glasteel Support Pipe
3. Embedded Signal Conductor
4. Steel Substrate (support pipe and probe)
5. Thermistor
6. Electrolyte
7. Glass Disc
8. Electrolyte Leakage Path
9. Seal
10. Thrust Pipe
11. Replaceable pH Probe
12. Electrolyte Reservoir
13. Reference Electrode
14. pH Transmitter

FIG. 8.48k
The construction of the replaceable Glasteel pH probe assembly. (Courtesy of Pfaudler.)

© 2003 by Béla Lipták

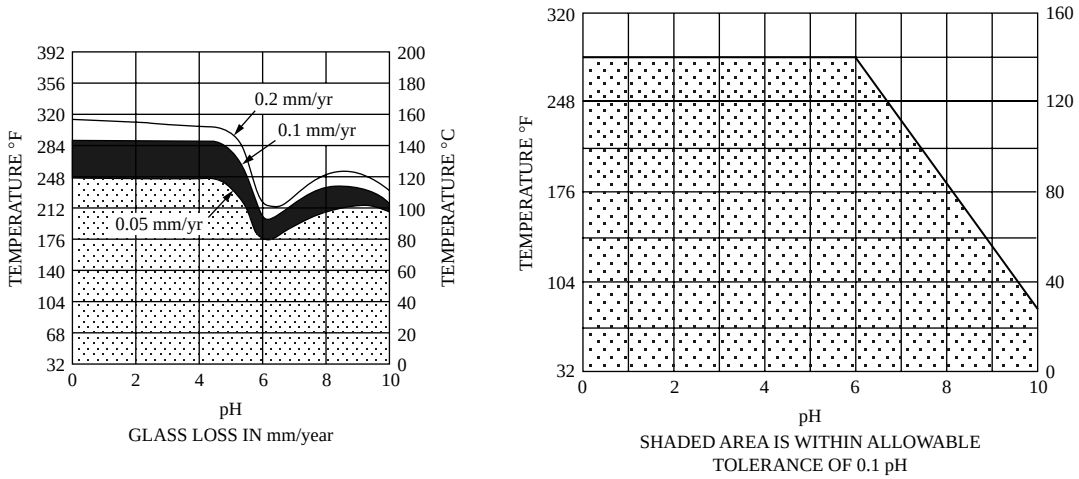

FIG. 8.48l
The Glasteel electrode's corrosion resistance and temperature rating is better than of other electrodes. (Courtesy of Pfaudler.)

electrode in the early 1990s. It had the potential for a temperature rating of 200°C and held the promise of eliminating the problems of dehydration, etching, sodium ions, and breakage associated with glass measurement electrodes, as well as being able to make repeatable measurement outside the 0 to 14 pH range.

Unlike antimony, iridium oxide has excellent linearity and repeatability. However, as with other metal oxides, iridium oxide responds to oxidizing and reducing agents, which tend to severely offset the pH reading, even at low parts per million concentrations. Attempts were made to circumvent the effects of oxidizing and reducing agents through the use of polymer coatings, but these proved unsuccessful; therefore, the development efforts toward industrial iridium oxide sensors have largely been abandoned.

Ion-Selective Field Effect Transistors The most promising new pH sensor technology of the last decade has been the development of the ion-selective field effect transistor (ISFET). Its greatest advantage is that it has a relatively small, integral pH sensitive area instead of the glass bulb found in common pH electrodes, which can break and contaminate the process sample with broken glass. This makes the ISFET especially appealing for food applications, in which on-line pH measurements have been avoided in consideration of the risk of contamination by broken glass electrodes.

An ISFET (Figure 8.48m) functions like a metal oxide semiconductor field effect transistor (MOSFET), but it uses a pH-sensitive membrane over the gate or channel region, which is exposed to the process solution, rather than the conductive gate terminal used by a MOSFET.

When an ISFET is operated at a constant drain current, the measured gate-source voltage is a result of the potential of the conventional reference electrode and of the pH sensitive membrane, which responds to pH in a Nernstian manner, similar to a conventional pH electrode. The special circuitry required to handle an ISFET measurement can be embedded

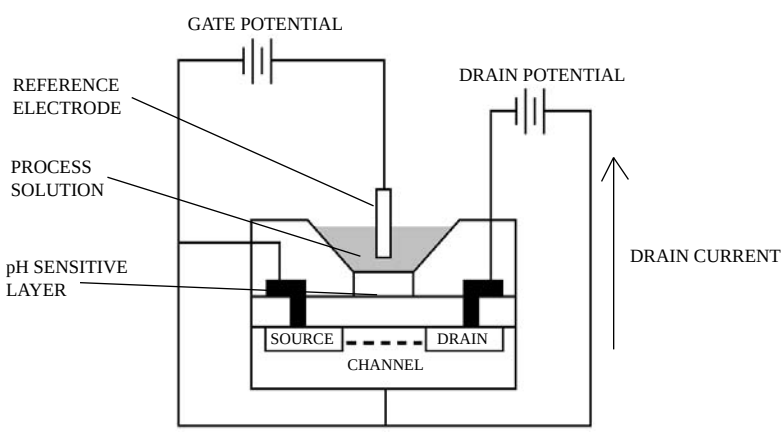

FIG. 8.48m
ISFET pH sensor.

© 2003 by Béla Lipták

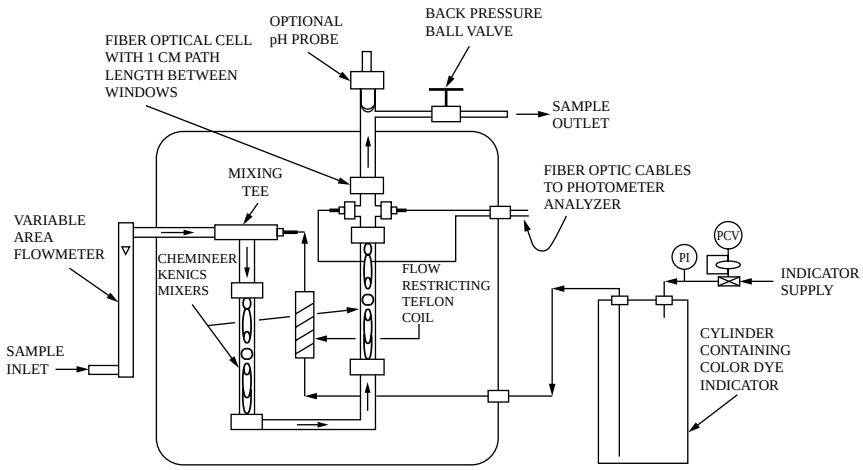

FIG. 8.48n
Photometer-type fiber optic pH detector. (Courtesy of Custom Sensors & Technology.)

TABLE 8.48o
Relative Performance of Different pH Probe Designs Considering a Number of Performance Criteria

Type (Range)	*Accuracy*	*Temperature*	*ORP*	*Sodium*	*Coating*	*Abrasion*	*Etching*	*Cost*
Glass bulb (0 to 14 pH)	+	–	+	+	–	–	–	+
Flat glass (2 to 12 pH)	+	–	+	–	+	+	–	+
Glasteel (0 to 10 pH)	+	+	+	+	+	+	+	–
Antimony (3 to 11 pH)	–	–	–	–	–	+	+	+
Photometer (0 to 14 pH)	+	+	–	+	+	+	+	–

+ = good
– = poor

in the pH analyzer or in an electronics module, which allows the ISFET sensor to be used with a conventional pH analyzer.

The major drawback of ISFET sensors relative to conventional glass electrodes has been their lack of robustness, and this has created problems in the food industry, which often requires exposure to strong alkaline solutions that are used for clean-in-place (CIP) sanitation. The robustness of ISFET pH sensors is likely to improve in the future.

Fiber-Optic pH Measurement Photometer-type pH measurements using fiber optic sensors and pH sensitive color dyes have been used *in vivo* in medical applications (Figure 8.48n). If the sample system is properly designed, measurements using this technology should be free of problems due to sodium ions as well as temperature, coating, and abrasion. On the other hand, the time delay caused by the temperature lag in the sampling system, along with the higher cost and maintenance, are disadvantages.

The most promising on-line application of fiber optic pH measurement would be for low-conductivity pH measurements, because the problems of flow sensitivity and electrokinetic effects observed with convention glass and reference electrodes are eliminated.

Relative Performance of pH Sensors The relative performance of the different types of measurement electrodes under various operating conditions is summarized in Table 8.48o, where the (+) sign refers to good, and the (–) sign indicates poor performance or rating.

Reference Electrodes

The reference electrode should provide a standard reference potential at a given temperature plus an electrical continuity between its internal electrode and the glass measurement electrode (Figure 8.48c). The standard reference potential is the result of a reproducible silver ion concentration maintained by a silver-silver chloride wire in contact with a potassium chloride solution.

The reference electrode has a junction where the internal electrolyte is in contact with the external process fluid. A liquid–liquid junction or diffusion potential develops as electrolyte ions and process ions migrate into the junction. When the charge accumulation becomes large enough to oppose further ion migration, the potential stops changing.

This potential introduces an error that is often overlooked in pH measurements. Figure 8.48p shows the error for various concentrations of potassium chloride liquid fills and different

© 2003 by Béla Lipták

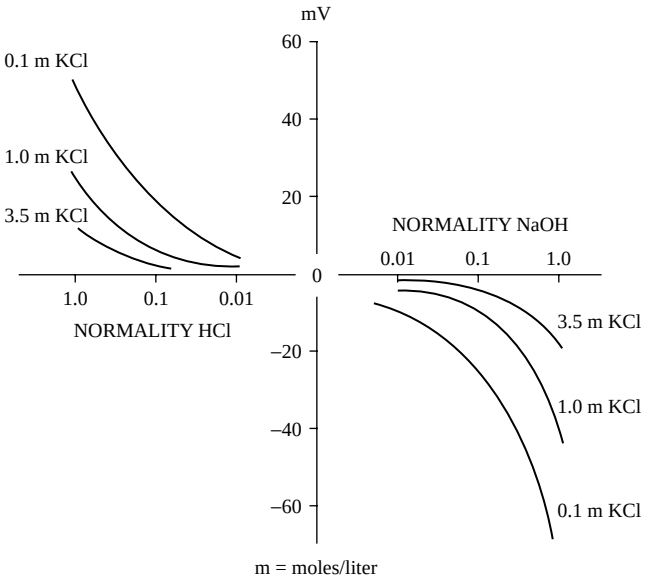

FIG. 8.48p

Charge accumulation at the liquid–liquid junction can oppose ion migration and introduce an error. The values of this error are shown for different concentrations of electrolyte (KCl) and different concentrations of acidic (HCl) or basic (NaOH) process fluids. (Courtesy of Yokogawa.)

concentrations of hydrochloric acid and sodium hydroxide in the process fluid. The junction potential magnitude and time to equilibrium generally increase for gel-filled or solid-state reference electrodes.

Flowing and Double Junctions The reference junction is also an entry path of process material into the internals of the reference electrode. Electrolyte contamination can cause large shifts of the pH measurement. This happens when the equilibrium between the silver–silver chloride wire and the dissolved silver ion in the reference electrolyte is disrupted, typically by precipitation or complexation of the dissolved silver, most notably by sulfide, iodide, and bromide in the process.

A flowing junction helps reduce such contamination and helps establish a quicker and more constant reference junction potential. However, flowing junctions require electrolyte pressurization above the process pressure and periodic refilling of the electrolyte. Figure 8.48k illustrates the use of pressurized remote-mounted reservoirs. The reference electrode is mounted in the external reservoir for additional protection against contamination and for improved temperature stability.

Flowing junctions are much more common in European applications. Unlike a flowing junction, which maintains electrolytic contact with the process by transport of the electrolyte solution, a nonflowing junction relies on the diffusion of reference electrolyte ions into the process, and, as a result, will always be susceptible to the diffusion of process material through the liquid junction.

Combination Measurement/Reference Electrode In the United States, the combination electrode is used mostly to reduce the maintenance and replacement cost of electrodes. It has a sealed reference electrode that surrounds the measurement electrodes and an annular reference junction (Figure 8.48q).

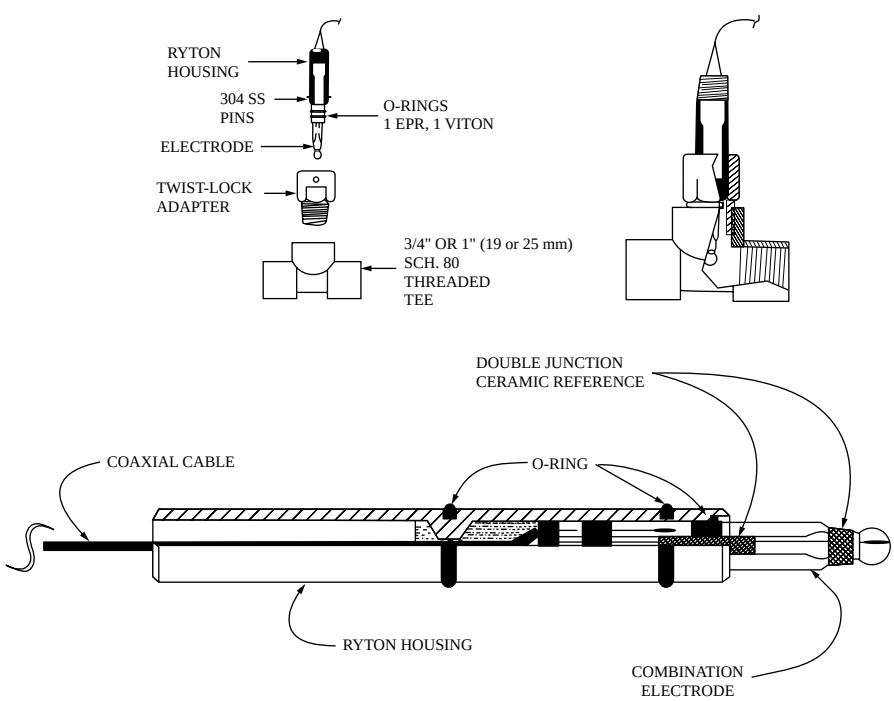

FIG. 8.48q

Combination electrode with double junction. (Courtesy of Van London.)

© 2003 by Béla Lipták

The construction features of a particular reference design in a combination electrode present a tradeoff between (a) the effort to quickly establish and minimize a constant junction potential and (b) the goal of resisting contamination and coating. The user must decide which is more important for a given application.

A decrease in the area of the reference junction reduces contamination but increases coating problems. A thickening or solidification of the internal fill, the addition of junctions, and a decrease in the porosity of the junction reduce contamination problems but delay equilibrium and often increase the magnitude of the junction potential. Figure 8.48q shows the cross section of a combination electrode with a double-junction reference.

The potassium chloride solution is saturated and has a tendency to crystallize and reduce the diffusion rate and the associated potential at the junction. Also, silver from the silver–silver chloride internal element gets into the potassium chloride fill, reacts with sulfides and halides, and clogs the junction.

Multiple Junction References The most common approach to preventing contamination of nonflowing reference electrodes in combination pH sensors has been the use of multiple junction references (Figure 8.48r). These designs retard the diffusion of contaminants that reach the reference element by requiring them to sequentially diffuse through each junction of the reference.

The electrolyte solutions in the reference are typically gelled to prevent transport of the contaminant to the next liquid junction by convection. The electrolyte solution in contact with the outermost liquid junction can be an electrolyte with a low silver ion concentration, such as potassium nitrate, to prevent precipitation of silver halides at the outermost liquid junction and precipitation of heavy metals in the process with chloride in the electrolyte solution.

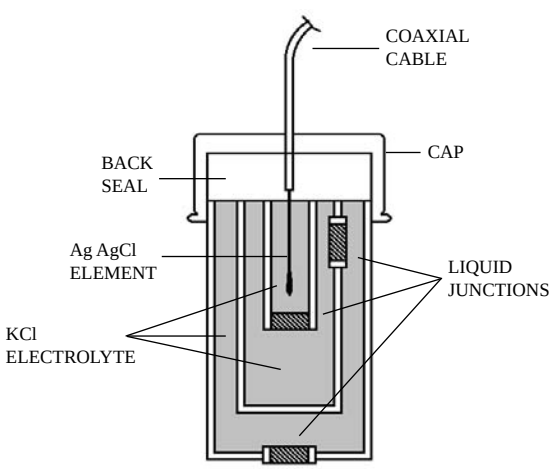

FIG. 8.48r
Triple junction reference electrode.

Stiff Gel Reference Mettler-Toledo has developed an Argenthal reference system that has a stiff gel with silver ion traps to catch contaminants that would precipitate silver ion. It can use multiple liquid junctions or an aperture diaphragm to provide a direct contact between the process and the reference electrolyte. It provides performance advantages in streams with high salt concentrations, emulsions, suspensions, proteins, sulfides, hot alkalis, and pressure fluctuations.

Differential Reference Another approach has been to dispense with the conventional silver–silver chloride reference altogether. Figure 8.48s describes Great Lakes Instruments' patented differential reference electrode. It uses a second glass measurement electrode behind a double junction in a buffer solution for the reference electrode. The glass bulb isolates the silver–silver chloride element of the reference from sulfides and halides in the process. The buffer solution is chosen to be compatible with the process fluids to ensure a constant buffer pH and constant reference potential.

A ground rod prevents errors and noise from ground potentials. The smaller positive ions in the buffer solution tend to move through the reference junction out into organic and pure water streams. This creates an offset in the pH reading. The differential electrode has an excellent performance record in wastewater streams with inorganic acids and bases.

Because of the lower thermal conductivity of most solid-state media, it is especially important for the temperature compensation sensor to be as close as possible to the tip to minimize thermal lag.

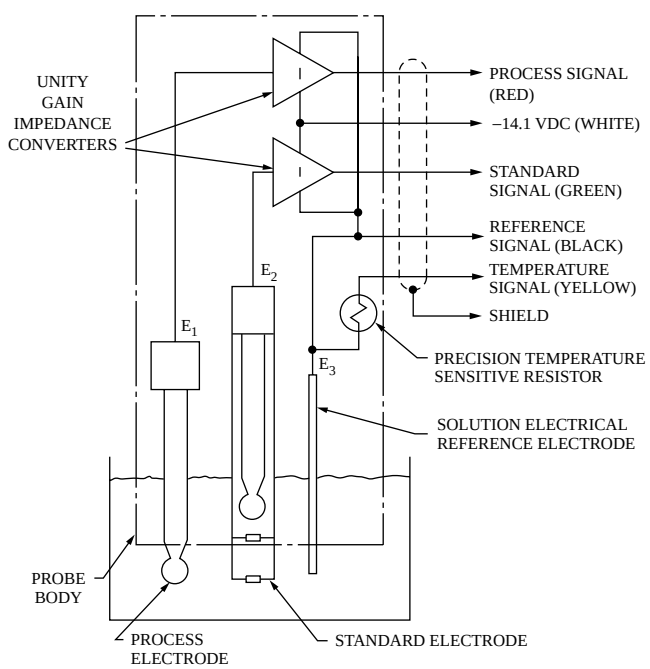

FIG. 8.48s
The differential electrode measures the electrical potential between the process and the standard electrode. (Courtesy of Great Lakes Instruments.)

© 2003 by Béla Lipták

ELECTRODE CLEANERS

Significant natural self-cleaning by turbulent eddies requires a velocity of ≥5 ft/sec past the electrode. A velocity of greater than 10 ft/sec can cause excessive measurement noise and sensor wear. The area obstructed by the electrode must be subtracted from the total cross-sectional area when estimating the total area that is open to flow around the electrode.

Shrouds and Filters

The pressure drop at the restricted cross section should be calculated to ensure that there will be no cavitation. Some shroud designs such as the tapered shroud in Figure 8.48g create more effective eddy action. Flat surface electrodes get adequate cleaning action at velocities of 1 to 2 ft/sec.

The addition of filters shifts the maintenance from the electrode to the filter. The filter usually needs to be changed more often than the electrode has to be cleaned. An extra filter is not recommended unless it is self-cleaning (Figure 8.48t) or can be automatically backwashed. This design is described in more detail in Section 8.2. It serves not only to keep the solids out through filtration, it also keeps the 10-μm metal filter clean by periodically reversing the flow and applying pulses to loosen the particles that might have settled into the filter pores.

Automatic Cleaners

The four types of automatic cleaners are ultrasonic, brush, water-jet, and chemical. The components of some of these assemblies are shown in Figure 8.48u and their performance ratings for a variety of applications are given in Table 8.48v. These methods tend to concentrate on the removal of coatings from the sensing electrode. Particles caught and material clogged in the porous reference junction are generally difficult to dislodge. The impedance of plugged reference junctions

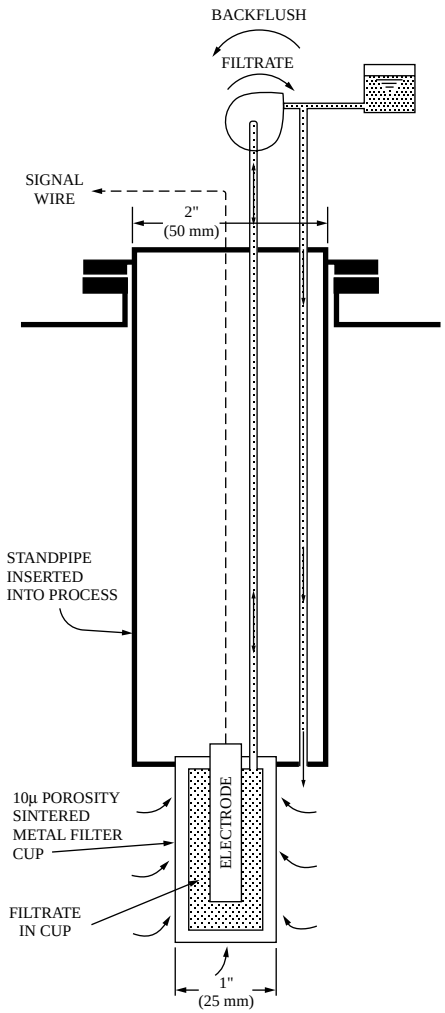

FIG. 8.48t
Backflushed porous filter cup design for protecting electrodes from material buildup. (Courtesy of TBI-Bailey Controls.)

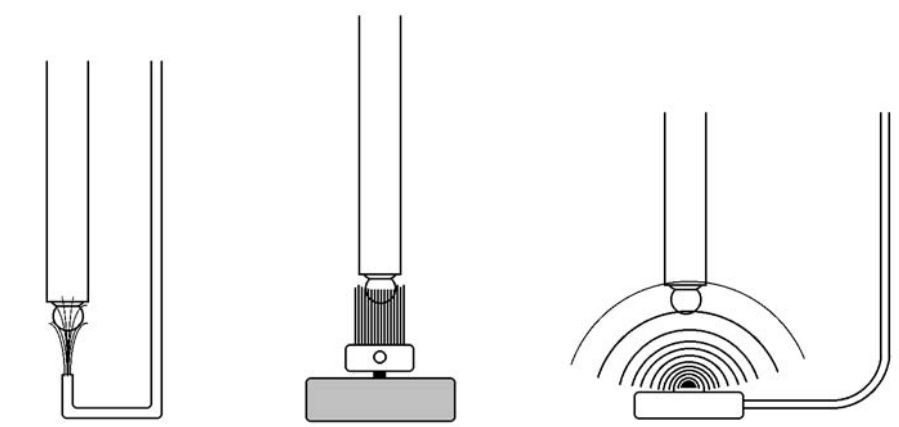

FIG. 8.48u
Design variations of on-line electrode cleaners.

© 2003 by Béla Lipták

TABLE 8.48v
*Ratings for Various Types of Cleaners**

	Application	*Ultrasonic*	*Water-jet*	*Brushing*	*Chemical*
Slime Microorganism	Food, paper, pulp, aquatic weed	X	O	O	△
	bacteria (activated sludge) whitewash	△	O	O	△
Oil	Tar, heavy oil	X	X	X	△
	Light oil	O	△	△	O
	Fatty acid, amine	X	O	X	O
Suspension	Sediment	O	X	X	O
	Metallic fines	△	X	X	O
	Clay, lime	△	O	X	O
Scale	Flocculating deposit neutralized effluent $CaCo_3$	△	△	△	△

O: Recommend
△: Applicable
X: Not applicable
*Courtesy of Horiba Instruments.

can get so high that it approaches an open circuit. The pH reading goes off the scale in the high direction.

Ultrasonic Cleaners The ultrasonic cleaner uses ultrasonic waves to vibrate the liquid near electrode surfaces. Effectiveness depends on the vibration energy and velocity past the electrodes. Heavy-duty electrodes are needed to withstand the ultrasonic energy. The ultrasonic cleaner works well in processes where fine particles and easily supersaturated sediments are formed or in suspension. It can move loose and light particles and oil deposits. Most of the disappointments with ultrasonic cleaners come from applications in which coatings are difficult to remove. In general, their use has declined in recent years in favor of water-jet and chemical cleaning.

Brush Cleaners A brush cleaner removes coatings by rotating a soft brush around the measurement bulb. The brush does not reach the reference junction. It has an adjustable height and a replaceable brush, and it can be electrically or pneumatically driven. Soft brushes are used for glass and ceramic disks are used for antimony electrodes. Sticky materials can gunk up the brush and smear the bulb.

Water-Jet Cleaners The water-jet type of cleaner directs a high-velocity water jet to the measurement bulb. The reading of the loop will become erratic during washing. Therefore, the cycle timer that starts the jet should also freeze the pH reading and switch the pH controller to manual during the wash cycle and for at least two minutes after the wash period to provide for electrode recovery. The water jet works well in removing materials that are easily dissolved in water.

A flow-through brush cleaner and water-jet combination assembly is shown in Figure 8.48z, and a high-pressure flanged assembly, which can be installed in a pipe tee, is shown in Figure 8.48x.

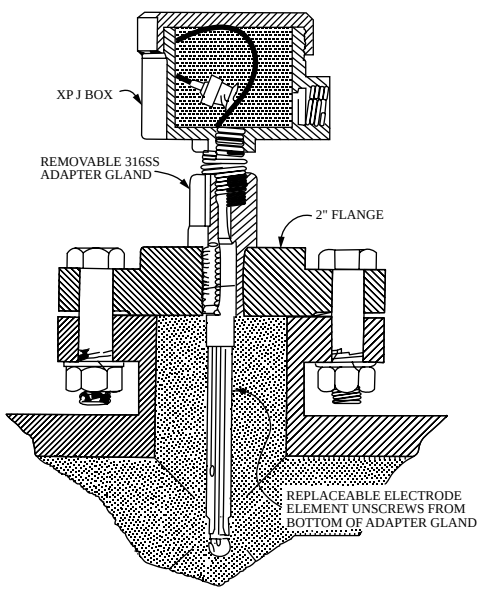

FIG. 8.48x
High-pressure electrode cleaning assembly. (Courtesy of Van London.)

Chemical Cleaners Chemical probe cleaning uses a chemical jet such as a dilute acid or base that is compatible with the process. A base is typically used for resins, and an acid for crystalline (carbonates) and amorphous precipitations (hydroxides). A dilute hydrochloric acid solution is frequently used.

Chemical cleaning tends to be the most effective of the available methods, but acid and base cleaners chemically attack glass. In addition, cleaning cycles that are too frequent or too long will cause premature failure of the glass electrode. As with the water jet, the cycle timer must hold the last pH reading and suspend control action during the wash cycle.

© 2003 by Béla Lipták

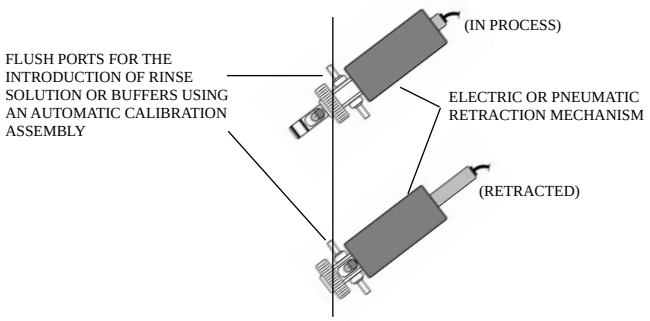

FIG 8.48y
Retraction assembly.

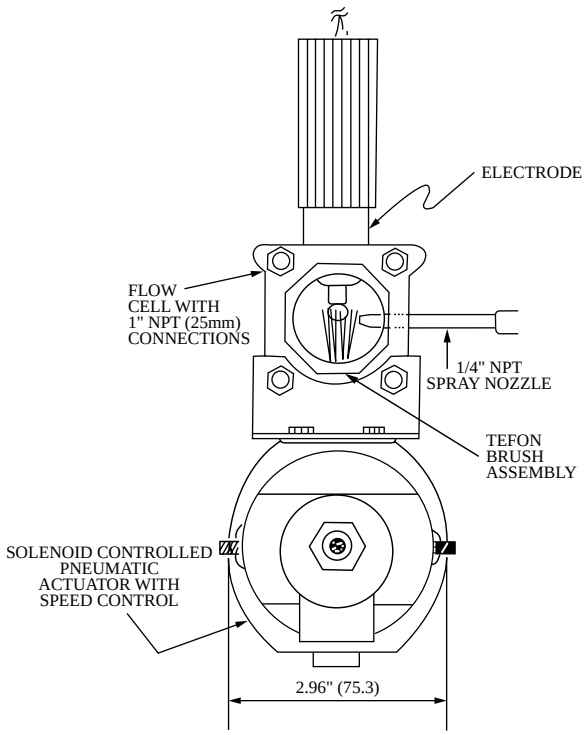

FIG. 8.48z
Brush cleaner with optional water jet.

Redundant pH sensors can be installed in parallel so that while one electrode assembly is being reconditioned, the other is in control. In such installations, after the wash cycle, the reconditioned assembly is automatically returned to control.

Automatic Retraction An electrically or pneumatically retractable pH assembly can be used in automated on-line cleaning applications and for storage, regeneration, and calibration (Figure 8.48y). This design is particularly useful in applications where the duration of probe exposure must be short so as to protect it from glass surface deterioration and to avoid forming contamination of the reference fill. Such contamination can be caused by the hot caustic or by nonaqueous solutions.

In any mounting method, the electrode tips must be pointed down to prevent the air bubble inside the electrode fill from residing in the tip and drying out the inside surface. The air bubble is necessary to provide some compressibility to accommodate thermal expansion. An installation angle of 15° or more from the horizontal is sufficient to keep the bubble out of the tip. Some electrode designs eliminate the bubble and provide a flexible diaphragm for fill contraction and expansion.

Manual Cleaning Electrodes can be manually cleaned by soaking them for several hours in a dilute hydrochloric acid solution. In general, the solution used for cleaning should be chosen for its effectiveness in removing the contaminant while not attacking the wetted materials of the pH sensor. Exposure to cleaning solutions should be minimized, as it can cause contamination of the liquid junction.

Electrodes that are sluggish or have an insufficient span or efficiency can be reactivated by soaking them for 1 min in a dilute solution of hydrofluoric acid in a nonglass container. The reactivation is created by the hydrofluoric acid dissolving part of the aged gel layer. The electrode should then be soaked overnight in its normal storage solution (typically, 4 pH buffer).[10]

On-line electrode cleaning systems should be considered when manual cleaning becomes a maintenance burden. Selection of the cleaning method should be done in consultation with the manufacturer of the cleaning system, given that several factors are peculiar to each process and cleaning method, and these can determine the difference between success and failure.

APPLICATION PROBLEMS

High Salt Errors

Alkalinity error is caused by positively charged alkaline ions that move into the outer glass surface, displace the hydrogen ions, and decrease the activity of the hydrogen ion in the gel layer. The millivolts developed at the surface are proportional to the ratio of the activity of the hydrogen ion in the process fluid to that in the gel layer. Therefore, the decrease in activity in the gel layer increases the millivolts developed, which decreases the pH reading.[11] The result is a perceived increase in hydrogen activity of the process and a lowered pH reading.

The error disappears when the electrode is removed and inserted in buffer solutions. The smaller alkaline ions can more easily penetrate the glass matrix and cause a greater shift. Thus, lithium ions cause a larger error than sodium ions, and sodium ions cause a larger error than potassium ions. Because sodium ions are much more common, the effect is often called the *sodium ion error.*

Tight-matrix, high-pH glass formulations such as glass L in Figure 8.48i and general-purpose wide-range glass formulations such as glass G in Figure 8.48i minimize the alkalinity error. For alkalinity error caused by high salt concentrations, the decrease in pH readings is offset by the increase in pH caused by the decrease in the hydrogen ion activity.

© 2003 by Béla Lipták

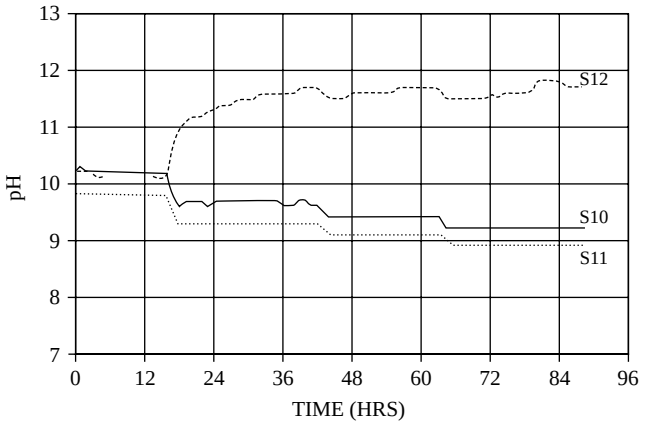

FIG. 8.48aa
High salt (NaCl) effect on electrodes.

High Salt Effect on Electrodes For an increase in sodium chloride concentration from 1 to 4 molarity at 25°C, the pH reading from a general-purpose glass dropped by only 0.2 pH in a test with Tris buffers. For lithium chloride, the pH reading decreased by 1.0 pH. For potassium chloride, the pH reading actually increased by ≈0.4 pH.

A separate test, documented in Figure 8.48aa, with three electrodes installed in a circulation line showed that pH measurement decreased slightly for three additions of sodium chloride as expected for glass bulb measurement electrodes (S10 and S11) but went upscale by 1.5 pH for a flat glass measurement electrode (S12). Subsequent tests and calibration checks of the flat glass electrode confirmed that it was in good condition.

Sodium hydroxide solutions above 12 pH and hydrofluoric acid solutions below 3 pH will greatly shorten the life of the electrode. The chemical attack rapidly increases with temperature and may cause failure within a day. Sample cooling and dilution are often the only alternatives.

High Acid Errors

Acid error is attributed to the adsorption of acid molecules into the gel layer and the associated increase in the hydrogen ion activity of the gel layer.[12] Exposure to concentrated acids also dehydrates the gel layer and reduces the efficiency of the electrode. The net result is an increase in the pH reading. Acid error typically starts below 1 pH and becomes worse as the pH decreases and exposure time increases. A periodic water soaking or water-jet washing of the measurement electrode helps replenish the gel layer.

Temperature Errors

The actual pH of the process stream changes with temperature due to changes in dissociating constants with temperature. Figure 8.48bb shows the pH change with temperature for a neutral solution and 6.0 pH and 9.0 pH solutions with strong acids and bases. Figure 8.48cc shows the temperature effect on the pH of strong electrolytes.

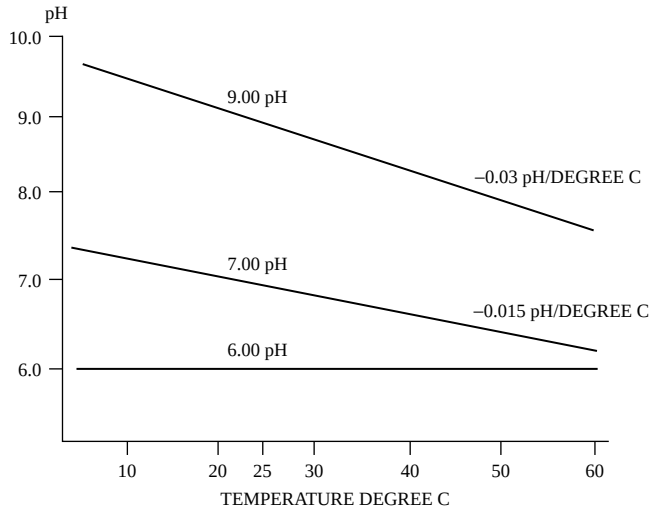

FIG. 8.48bb
Temperature dependence of water and strong acid and base solutions.

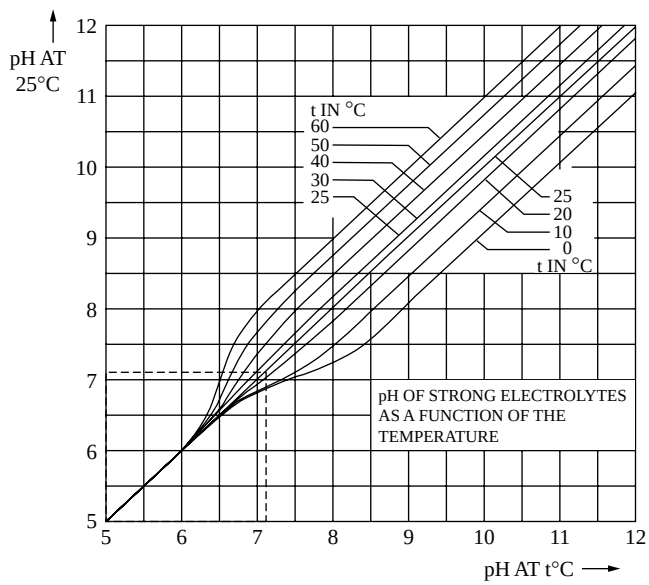

FIG. 8.48cc
The pH of strong electrolytes changes with temperature. (Courtesy of Yokogawa.)

The dissociation constants of strong acids and bases are off the scale, and the effect shown in this figure is primarily the result of changes in the water dissociation constant. Strong acid solutions have virtually no temperature dependence, but neutral and strong base solutions will always exhibit temperature dependence. For weak acids and bases, the dissociation constants are on the scale, and their effect on pH is more difficult to predict. It usually requires a laboratory test.

Microprocessor-based transmitters offer polynomial or straight-line fits of the data to temperature-correct the measurement for actual pH changes. Most of these algorithms cannot correct for changes in the glass or in the internals of the electrode.

© 2003 by Béla Lipták

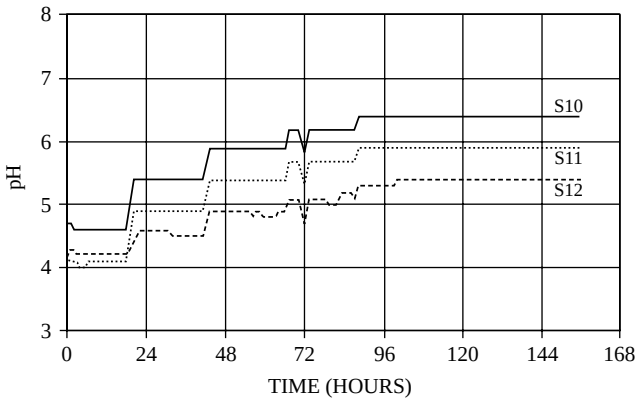

FIG. 8.48dd
Low water effect on three electrodes, produced by the addition of propylene glycol.

Water Concentration Errors

Water concentrations below 40% can also cause shifts in the pH measurement. When the addition of a solvent causes the water content to drop below 40%, the change in hydrogen ion activity can be significant enough to cause a noticeable change in pH. The addition of propylene glycol causes a decrease in the hydrogen ion activity and an increase in the pH reading.

For the same three electrodes (S10, S11, and S12) in the circulation line that were subjected to the high salt test shown in Figure 8.48aa, four successive additions of propylene glycol were made to perform a low water test. The incremented pH measurements are shown in Figure 8.48dd.

For applications with low water content, it helps to use a glass formulation with a large number of active sites and to automate the periodic water soaking or water-jet washing of the glass to hydrate the gel layer.

Nonaqueous Solutions

In nonaqueous solutions, the solvent can be an acid, base, alcohol, or hydrocarbon instead of water. An acid solvent acts as a proton donor, and the pH scale is shifted down. For example, the pH scale for an acetic acid solvent is −6 to −1 pH, and for a formic solvent is −9 to −2 pH.

A base solvent acts as a proton acceptor, so the proton activity is decreased, and the scale is shifted up. An alcohol solvent acts as both a proton donor and acceptor like water so that changes in proton activity are moderated. The pH scale occupies about the same region as water but may extend slightly farther upscale and downscale. For example, the pH scale for an ethanol solvent is −4 to +16 pH.

A hydrogen solvent acts as neither a proton donor nor acceptor, so the solvent is passive to changes in proton activity. Consequently, the upper and lower limits of the pH scale are usually much farther apart than for water. For example, the pH scale for acetone solvent is −5 to +20 pH.[13]

If the process is an aqueous solution dispersed with an immiscible, nonaqueous solvent, much of the acid and alkali will be in the aqueous phase. It is better to make the pH measurement in a vessel that allows the phases to separate and confine the pH measurement to the aqueous phase.

When considering applications with a significant nonaqueous solvent content, it is important to note that most pH sensors are built with wetted materials designed for aqueous applications. In many cases, nonaqueous solvents can attack the o-rings, seals, and even body material of the sensor, causing the process to leak into the sensor and cause a short.

The presence of nonaqueous solvents can also cause unpredictable behavior at the liquid junction of a nonflowing reference, leading to measurement errors. Therefore, the use of a flowing reference should be considered.

Probe Coating and Low Conductivity

A slime coating of 1 mm thickness slows down the migration of hydronium ions to the glass surface enough to increase the pH measurement time constant from 10 sec to 7 min.[14] The slow electrode response greatly increases the period of oscillation of the control loop and causes poor control. The amplitude of the measurement oscillations is a very attenuated version of the real-world pH fluctuations. For thick coatings, a hydronium ion concentration is trapped, and the pH reading freezes.

Coatings also increase the impedance of the electrode and can cause a reading that steadily climbs up the scale as the coating thickens. Some microprocessor-based transmitters measure the electrode's impedance and issue a warning under such conditions. Conventional pH transmitters cannot determine whether the measurement bulb or the reference junction is coated or if the conductivity of the process fluid has changed. Better diagnostics of these conditions are expected from the evolving intelligent transmitters.

Conventional pH measurements of low-conductivity water (e.g., boiler feedwater and condensate) suffer from flow sensitivity, electrokinetic effects, sluggish response, changes in hydrogen activity from flow of reference electrolyte, actual pH changes from water dissociation constant changes with temperature, and isopotential point shifts with temperature.

Special systems have been designed to minimize these problems through the use of a constant head device to provide constant flow; stainless steel components to ensure that sensors are completely shielded and earthed; a low-resistance glass sensor in a high-velocity, low-volume cell with minimum distance between reference junction and glass to decrease system resistance; a low-leak reference junction to minimize hydrogen activity changes from electrolyte contamination of the sample; an in-line automated temperature-adjusted buffer facility to reduce thermal equilibrium and flow errors; and full temperature compensation to deal with Nernst slope, actual pH, and isopotential point changes with temperature.[15]

Air bubbles that cling to or pass by the measurement bulb can cause an upscale shift or noise in the reading from the

© 2003 by Béla Lipták

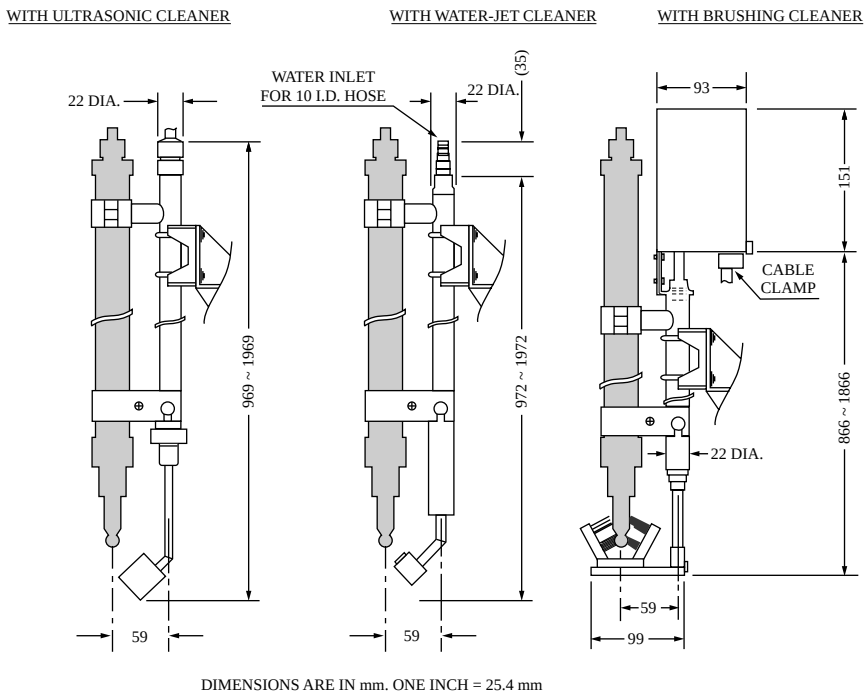

FIG. 8.48ee
Submersion assemblies provided with various cleaners. (Courtesy of Horiba Instrument.)

lack of hydronium ions and high impedance. Particles can have a similar effect. Abrasion reduces the number of active sites on the glass surface and causes a shortened span and slow response.

INSTALLATION METHODS

There are two main principles for installation design. First, for pH control, the sensor location and assembly must be chosen to minimize transportation delays and sensor time constant. The additional dead time from a delayed and slow measurement increases the loop's period, control error, and sensitivity to nonlinearity.

Second, the installation must minimize how often the electrodes must be removed for maintenance (e.g., calibration and cleaning). Removal and manual handling increase error and reduce the life of the electrode. The fragile gel layer is altered by handling and the equilibrium achieved by the reference junction is upset.

Submersion Assemblies

Sample systems are undesirable, because they add transportation delay and increase cost, and there are problems associated with winterization and plugging. Therefore, it would seem that a submersion assembly would be best for control. However, velocities below 1 ft/sec will dramatically slow the electrode measurement response because of the increased boundary layer near the glass surface[16–18] and promote the formation of deposits that can further slow down the measurement.

The bulk velocity in even the most highly agitated vessels rarely exceeds 1 ft/sec and is often much lower. This results in coating problems and a slow response. Removal of a submersion assembly is also time consuming. The addition of various cleaners, such as those depicted in Figure 8.48ee, helps reduce the number of times a submersion assembly must be removed.

Side entry into a vessel with a retractable probe is the standard installation for fermenters, as illustrated in Figure 8.48ff.

Retractable Units

The best location for most assembly probes, except in the most abrasive services, is in a recirculation line close to the vessel outlet. Installation downstream of the pump is preferred, because the strainer blocks, and the pump breaks up, clumps of materials that might otherwise break the electrodes. The retractable electrode provides the most straightforward and economical solution, as compared to simply inserting the sensor, because it allows the sensor to be removed for service without shutting down the process line or draining a vessel. However, accidents caused by removal of the restraining strap or omission of tubing ferrules have caused such assemblies to be banned from many plants.

Flow-through assemblies or direct probe insertions with block, drain, and bypass valves are often used. The flow is returned to the suction of the pump or the vessel. If the flow chamber has a cross-sectional area that is much larger than the process connections, the velocity will drop too low, response time will slow, and coating problems will increase.

© 2003 by Béla Lipták

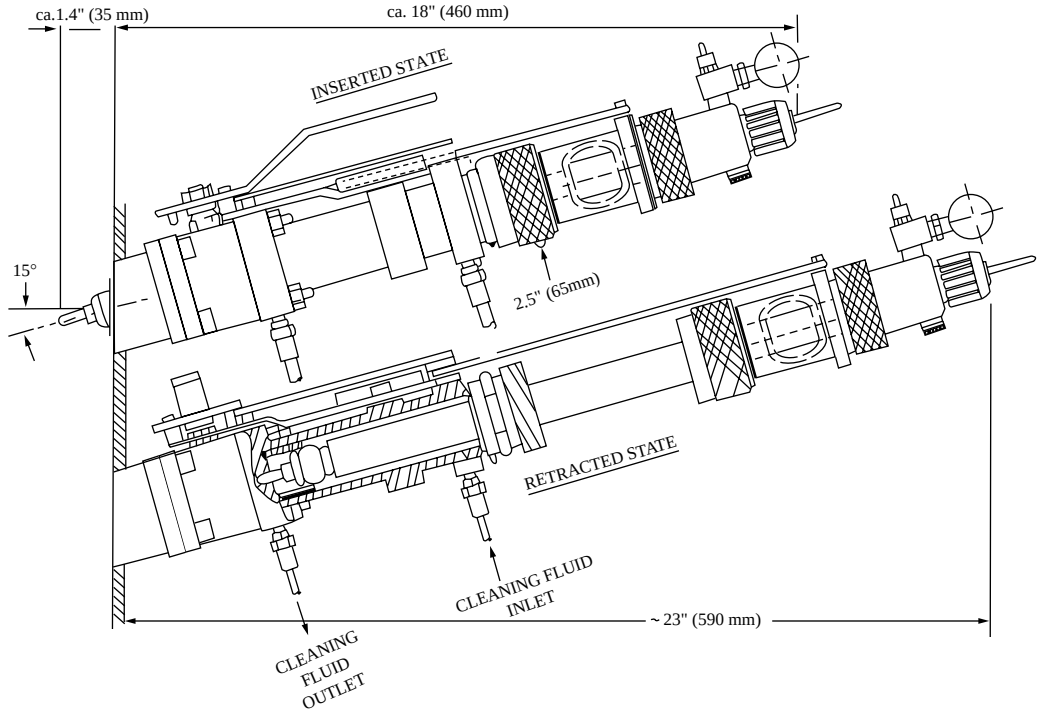

FIG. 8.48ff
Retractable, side entry probes, which are often used in fermenters.

Median Selector

A single pH measurement leads to a false sense of security. The use of two pH measurements creates endless questions as to why they do not agree. An alternative is to install three pH measurement systems and select the middle value (not the average). This method is preferred for pH control loops, especially where environmental limits exist, for the following reasons:[19]

1. It eliminates reaction to unreal spikes and fluctuations.
2. It reduces noise without introducing an additional lag.
3. It improves accuracy (reduces error band).
4. It ignores a single failure of any type.
5. It facilitates calibration while the loop is in automatic control.
6. It allows diagnosis of slow, dead, or inaccurate sensors.
7. It reduces unnecessary calibration requests and work.

A pH electrode is usually serviced only if it deviates from the median pH by more than one pH unit for more than several minutes. Median selection saves money by the elimination of unnecessary calibration and replacement. It can also increase on-stream time, reduce recordable violations, improve product quality, and reduce reagent consumption through improved sensor reliability and accuracy. However, triple redundant measurements do look expensive, and appearances sometimes become more important than performance.

Self-Diagnostics

An alternative to median selection is a self-maintaining installation of a single electrode. Some microprocessor-based transmitters have diagnostics based on electrode impedance measurements (Figure 8.48gg) and recovery time from a jet washing that can detect broken, coated, and unsubmerged sensors.

Glass Impedance Measurements Glass impedance measurements can be made between the glass electrode and a solution ground or the reference electrode, which has negligible impedance compared to the glass electrode. Glass electrode impedance is typically on the order of hundreds of megohms and is highly temperature dependent, decreasing by roughly one-half for every 8°C increase in temperature.

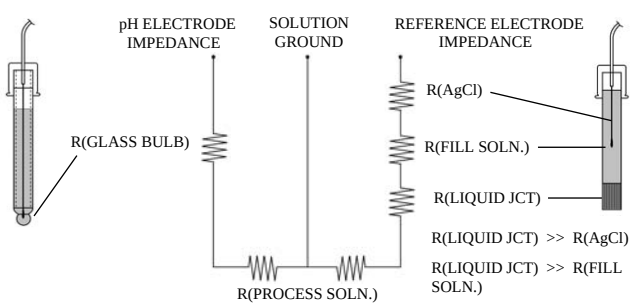

FIG. 8.48gg
pH sensor impedance diagnostic measurements.

© 2003 by Béla Lipták

As a result, the impedance reading must be temperature compensated to avoid false low-impedance alarms. In some cases with low-impedance glass electrodes at high temperatures, the impedance drops below the measurable range of the diagnostic circuitry, and the analyzer shuts off the low-impedance alarm.

The glass impedance measurement is most useful in detecting glass electrode cracking or breakage, which results in a sudden drop in impedance. Low-impedance alarms are also useful in detecting shorts in the sensor wiring, whereas high-impedance alarms can detect an open circuit or severe coating of the pH electrode.

Reference Electrode Impedance Reference electrode impedance is necessarily measured between the reference electrode and a solution ground and is typically in the low kilohm range. The major source of reference electrode impedance is the liquid junction and, thus, an increase in reference impedance can indicate that the liquid junction is plugged or coated or that the reference electrode is not in the process solution.

The reference electrode impedance is a much more sensitive indication of coating than glass electrode impedance. It should be noted that poisoning of the reference electrode by process components does not result in an increase in reference electrode impedance unless it is accompanied by a plugging of the liquid junction.

A temperature sensor, either internal or external to the pH sensor, is required for temperature compensation and can also be a source of sensor failure. pH sensor diagnostic features can also include detection of opens, shorts, and sense line errors.

Sensor Fault Signaling Sensor diagnostic errors are indicated on the analyzer display, and there is almost always a fault relay contact and fault current output value provided for remote indication of sensor faults. With the advent of pH analyzers with digital communications, the nature of the sensor fault can be identified remotely, enabling maintenance personnel to be better prepared to address the problem before visiting the installation.

CALIBRATION

The electrode should be washed with distilled water between buffer immersions. One should also remember that the actual pH of the buffer of process solutions can change with temperature[20] or with carbon dioxide absorption, and the reference junction can take a long time to equilibrate.

A 10-pH buffer can drop 0.1 pH per day as a result of carbon dioxide absorption, and, in general, all buffers should be discarded after use and the stock buffer containers tightly sealed. The pH sensor should be allowed to come to the same temperature as the buffer solution. All buffers should be checked with an accurate laboratory electrode and for expiration date before use. For flowing junctions, care must be exercised to ensure that the reference electrolyte does not contaminate the buffer. For separate electrodes, polarization should be avoided.

High-ionic-strength buffers should be employed for high-ionic-strength process applications. A process calibration should be performed 1 to 8 hr after the electrode is commissioned. (The wait time depends on the degree of solidification of the reference fill.) A zero or standardization adjustment is used to make the pH sensor agree with a sample that was measured with fast and accurate laboratory electrodes immediately after sample withdrawal.

Buffer Calibration Errors

Microprocessor-based pH analyzers often have features that help the user to avoid buffer calibration errors. Buffer values as a function of temperature are stored in memory for a two-point calibration, which allows the buffer value to be corrected for temperature during calibration. There is also a stabilization feature that prevents that analyzer from accepting a millivolt reading that has not fully responded to the buffer or millivolt changes due to warming or cooling of the sensor. Important diagnostic information is also provided after a buffer calibration in the form of the electrode slope, which is a measure of the sensitivity of the electrode and the zero offset, which indicates the reference electrode offset from an ideal value or asymmetry within the glass electrode.

Warnings are usually provided to prevent acceptance of a calibration that results in a slope and zero offset indicative of a bad sensor or a user error. Analyzers can also perform fully automatic calibrations if provided with the software and relays for controlling withdrawal of the sensor from the process through an insertion valve, rinsing, and introduction of the buffers.

pH electrodes should be stored in either a 4-pH buffer solution to help condition the glass surface or a 7-pH buffer solution to help prevent the loss of ions from the reference fill. Electrodes stored in distilled water for long periods of time will deteriorate as a result of the loss of ions from the measurement glass reference fill.

CONCLUSION

The pH sensor should be chosen to meet the pH range of the application. The mounting method should be chosen to make the sensor easily accessible for maintenance and calibration. Most pH applications that involve water and dilute solutions at near ambient temperature are straightforward and pose few problems.

Special care should be taken with applications involving components that can poison the reference or foul the sensor, nonaqueous solvents, low conductivity, and extremes of temperature and pressure. In applications where the nominal pH is expected to be at the high or low limits of the 0 to 14 pH range, a conductivity measurement should be considered as an alternative measurement of acid and base concentration.

© 2003 by Béla Lipták

It should be remembered that the pH of solutions can change with temperature. This is particularly the case with solutions that have a neutral or basic pH. It never hurts to consult several sensor suppliers as to the suitability of their various designs to a particular process application.

References

1. McMillan, G. K., Understand some basic truths of pH measurement, *Chem. Eng. Prog.*, 87(10), October 1991.
2. McMillan, G. K., *pH Control*, Instrument Society of America, Research Triangle Park, NC, 1984.
3. Shinskey, F. G, *pH* and *pION Control in Process and Waste Streams*, John Wiley & Sons, New York, 1973.
4. McMillan, G. K., *Biochemical Measurement and Control*, Instrument Society of America, Research Triangle Park, NC, 1987.
5. McMillan, G. K., Woody's performance review—what's inline next for pH control, *InTech*, 35(1), January 1988.
6. Bates, R. G., *Determination of pH Theory and Practice*, John Wiley & Sons, New York, 1964, 11–12.
7. McMillan, G. K., pH control—a magical mystery tour, *In Tech*, 37(9), September 1984.
8. Kalis, G., How accurate is your on-line pH analyzer, *InTech*, 37(6), June 1990.
9. Lichtenstein, S. New concepts in the state-of-the art of pH measurement, *ISA 1983 Proc.*, 87664–741, 461–471.
10. Ingold, W., pH electrodes storage, ageing, testing and regeneration, Ingold technical publication E-TH 7–2-CH.
11. Ingold, W., Principles and problems of pH measurement, Ingold technical publication E-TH 1–2-CH, 17–18.
12. Ingold, W., Principles and problems of pH measurement, Ingold technical publication E-TH 1–2-CH, 19–20.
13. Bates, R. G., *Determination of pH Theory and Practice*, John Wiley & Sons, New York, 1964, 201–288.
14. Moore, R. L., Good pH measurement in bad process streams, *Instrum. Control Sys.*, 63(12), 39–43, 1990.
15. Rushton, C. and Bottom, A., Measuring pH in low conductivity waters, *Kent Tech. Rev.* (UK), 24, March 1979.
16. Disteche, A. and Dubuisson, M., Transient response of the glass electrode to pH step variations, *Rev. Sci. Instrum.*, 25(9), 869–875, September 1954.
17. Guisti, A. L. and Hougen, J. O., Dynamics of pH electrodes, *Control Eng.*, 8(4), 136–140, April 1961.
18. Hershkovitch, H. Z. and McAvoy, T. J., Dynamic Modeling of pH Electrodes, *Can. J. Chem. Eng.*, 56, 346–353, June 1978.
19. McMillan, G. K., *Tuning and Control Loop Performance*, 2nd ed., Instrument Society of America, Research Triangle Park, NC, 1990.
20. Ingold, W., Calibration of pH electrodes, Ingold technical publication E-TH-5–2-CH, 9–10.

Bibliography

Butler, J. L., Ionic Equilibrium—A Mathematical Approach, Addison-Wesley, Boston, MA, 1964.

How can pH probe fouling be reduced? *Control*, October 1992.

Gray, J. R., Glass pH electrode aging characteristics, *Proc. ISA/93 Tech. Conf.*, Chicago, IL, September, 1993.

Hoyle, D. L., The effect of process design on pH and pION control, *Proc. ISA-AID Symp.*, San Francisco, May 3, 1972.

Galster, H., *pH Measurement: Fundamentals, Methods, Applications, Instrumentation*, Wiley-VCH, New York, 1991.

Ingold, W., pH measurement and temperature compensation, Ingold technical publication E-TH-8–2-CH.

Kardos, P., Improving pH measurement and control, *Instrum. Control Sys.*, April 1981.

McMillan, G. K., *A Funny Thing Happened on the Way to the Control Room*, Instrument Society of America, Research Triangle Park, NC, 1989, 55–64.

Merriman, D. C., Junction potential variations in pH, *Proc. ISA/93 Technical Conference*, Chicago, IL, September 19–24, 1993.

Mooney, E. F., On-line photometric titrations for process control, *Proc. 1992 ISA Conference*, Houston, TX, October 1992.

Moore, R. L., *Neutralization of Waste by pH Control*, Instrument Society of America, Research Triangle Park, NC, 1978.

Pfannenstiel, E. Process pH measurement, InTech, October 2002.

Piovoso, M. J. and Williams, J. M., Self tuning pH control, *InTech*, May 1985.

Proudfoot, C. G. et al., Self-tuning PI control of a pH neutralization process, *Proc. Inst. Elec. Eng.*, 130(5), 1983.

Skoog, D. A. and West, D. M., *Principles of Instrument Analysis*, 2nd ed., Saunders College, 1980.

Weiss, M. D., Teaching old electrodes new tricks, *Control*, July 1991.

Wescott, C. C., *pH Measurement*, Academic Press, New York, 1978.

© 2003 by Béla Lipták

8.49 Phosphorus Analyzer

W. H. PARTH (1974, 1982) **B. G. LIPTÁK** (1995, 2003)

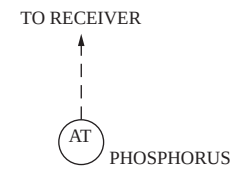

Flow Sheet Symbol

Methods of Detection:	A. Colorimetric B. Flame photometric C. Chromatographic
Operating Pressure:	Atmospheric
Materials of Construction:	Most analyzers can be obtained with wetted parts made out of stainless steel, glass, or Teflon®
Inaccuracy:	2 to 3% of full scale
Analysis Time:	From a fraction of a minute to 15 min
Ranges:	A. From 0–5 ppm to 0–20 ppm B. From 1 to 100 ppm The overall capability of measurement for all types is from 0–10 ppb to 0–100 ppm.
Costs:	Laboratory units cost $10,000 to $25,000; industrial installations with sampling system included cost from $25,000 to $100,000. Vane-type filters for sewage applications cost about $2500. (Also refer to Sections 8.2, 8.12, 8.13, 8.15, 8.65, and 8.66 for sampling system, filter, and analyzer costs.)
Partial List of Suppliers:	Also refer to Sections 8.2, 8.12, 8.13, 8.15, 8.65, and 8.66 for sampling system, filter, and analyzer suppliers. Bran+Luebbe (www.branluebbe.com) Hach Co. (www.hach.com) Ionics Inc. (www.ionics.com) Metorex (www.metorex.fi) Rosemount Analytical Inc. (www.processanalytic.com) Rosemount Inc. Div. of Emerson (www.rosemount.com) Thermo Orion (www.thermo.com) Zellweger Analytics (www.zelana.com/)

INTRODUCTION

Analyzers used in measuring the concentration of phosphorus have already been discussed under chromatographic (Sections 8.12 and 8.13) and colorimetric (Section 8.15) analyzers and will also be discussed under water quality and wet-chemistry analyzers (Sections 8.65 and 8.66). For this reason, the detailed designs of these analyzers are not repeated in this section.

Phosphorus in Wastewater

The principal application of phosphorus analyzers is in the control of phosphate removal in sewage treatment plants. By knowing the flow rate and the phosphorus content of raw sewage, the required optimal quantities of chemical additives can be determined. In addition, a measurement of the phosphorus remaining after treatment may be desired.

Phosphorus occurs in wastewater almost entirely in the form of phosphates, including orthophosphates, condensed phosphates (pyrophosphate, metaphosphate, and polyphosphate), and as organically bound phosphates. The various methods of phosphorus detection do not all respond to the total phosphorus present.

Other applications are those specific to the control of phosphate addition to high-pressure boiler water as a corrosion inhibitor, and to the measurement of elemental phosphorus in the effluent from a plant that extracts phosphorus from ore.

© 2003 by Béla Lipták

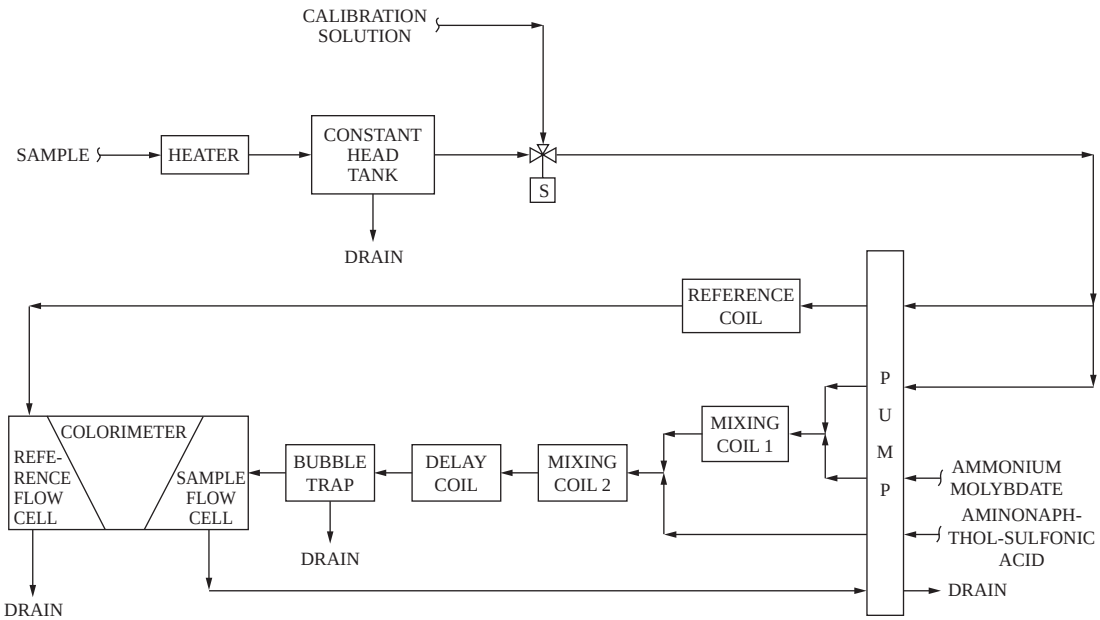

FIG. 8.49a
Orthophosphate analyzer.

COLORIMETRIC ANALYSIS

For a detailed discussion of colorimetric analyzers, refer to Section 8.15.

Laboratory Methods

Colorimetric procedures are available to determine the concentration of soluble orthophosphate. In the commonly used aminonaphtholsulfonic acid method[1] of analysis, ammonium molybdate reacts with a dilute phosphorus solution to produce molybdophosphoric acid. This acid is than reduced to the intensely colored complex, molybdenum blue, by the combination of aminonaphtholsulfonic acid and sulfite reducing agents.

The stannous chloride method,[1] although slightly more sensitive, is similar to the method just described except for the substitution of stannous chloride for aminonaphtholsulfonic acid as the reducing agent.

Continuous Analyzer

A continuous phosphorus analyzer consists of a sample temperature controller, a multiple peristaltic pump for reagent and sample metering, a mixing and time-delay section, reagent storage, a colorimeter, and an electronic readout section.

Referring to Figure 8.49a, the water sample is brought to a constant temperature to ensure uniform sample reaction and rapid response time. The sample stream is degassed in the constant head tank and divided into two paths, one for the reference sample and the other for the reaction sample. A multiple peristaltic pump meters the sample streams as well as the addition of ammonium molybdate and aminonaphtholsulfonic acid solutions.

The reaction and reference samples pass through separate delay coils. In one coil, which gives about a five-minute delay, the reaction sample and the reagents complete the color reaction; in the other delay coil, the reference sample is experiencing the same delay, in addition to the time that the reaction sample spends in the mixing coils. The sample and reference streams from the delay coils are fed into the dual flow cells of a dual-beam colorimeter. A bubble trap ahead of the colorimeter removes any bubbles formed in the analyzer.

The photodetectors sense the difference in color intensity between the reaction and reference samples. In this case, the molybdenum blue complex is measured at a wavelength of 6900 Å. The electronic section amplifies the colorimeter output and, if necessary, linearizes it. The use of a dual-beam colorimeter automatically compensates for the variations in inherent color or turbidity of the sample.

Total Phosphates

Total inorganic phosphate can be measured by first hydrolyzing the sample with sulfuric acid at 95°C (203°F). This converts the phosphates in the meta-, pyro-, and polyforms to orthophosphates. Total phosphates (inorganic plus organic) can be determined by an additional step consisting of oxidizing organic compounds (e.g., by boiling in potassium persulfate) to split off the phosphate moiety, which is then available for reaction. Instruments that use a single-beam colorimeter in either a continuous or batch-type analyzer are also available.

© 2003 by Béla Lipták

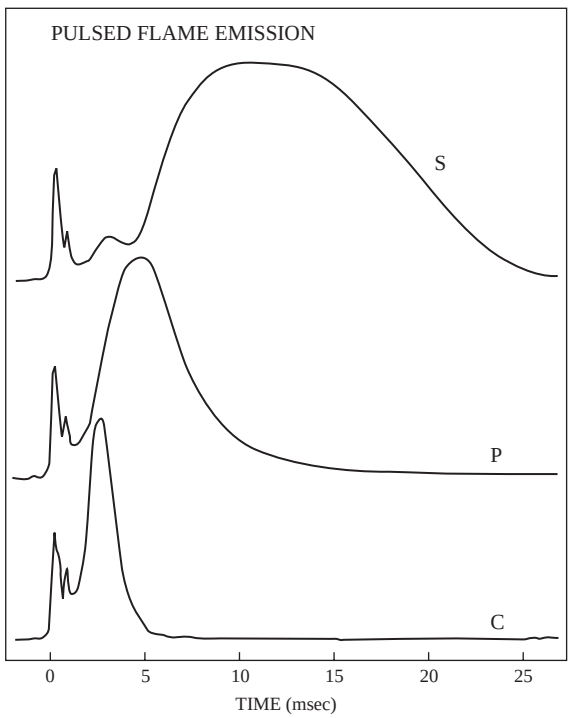

FIG. 8.49b
The separation in the time domain of phosphorus, sulfur, and carbon spectra. This PFPD analyzer provides infinite selectivity against haydrocarbon emission as well as unique heteroaton identification capability.[3]

FLAME PHOTOMETRIC ANALYSIS

This analyzer detects the photometric flame emission of phosphorous compounds in a hydrogen–air flame. This method was developed by Draegerwerk in Germany and was first applied to the detection of phosphorus compounds in air. As discussed in connection with Figure 8.12y, the method later was used as a detector for gas chromatography.[2] Still later, the pulsed flame photometric detector (Figure 8.12cc) was developed, which uses the pulsed flame characteristics of phosphorus shown in Figure 8.49b.[3]

Detector Operation

The detector in Figure 8.49c contains a burner with separate delivery tubes for hydrogen and the air sample. If phosphorus is present in the hydrogen-rich (reducing) flame, it will produce a strong luminescent emission between the wavelengths of 4850 and 5650 Å. This emission is at its maximum at 5260 Å and is isolated by a narrow bandpass interference filter.

The hydrogen and air are burned in a hollow tip that shields the flame from direct view of the mirror and photomultiplier tube. When phosphorus is present, the emission occurs above the shielded flame, and the light is transmitted directly and by way of the mirror through the filter to the photomultiplier tube. The shield offers specificity from carbon dioxide and hydrocarbons with flame emission at

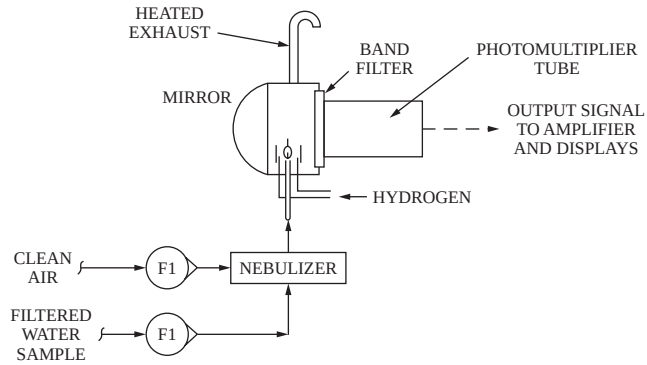

FIG. 8.49c
Flame photometric detector of phosphorus in water.

5260 Å. The output from the photomultiplier tube is linear over several decades.

The detector can measure phosphorus in water by the addition of a nebulizer, which injects a mist of sample water into a clean air stream at a constant rate. The output is linear in the 1 to 100 ppm range.

GAS AND LIQUID CHROMATOGRAPHY

Where elemental phosphorus discharges into water, it has been found that a concentration of a few parts per billion is lethal to fish. Laboratory techniques[4] possessing this sensitivity have been developed.

The phosphorus is partially isolated by extraction in a suitable solvent such as benzene or isooctane. A portion of the extract is injected into a chromatograph utilizing a flame photometric detector. Mud and tissue samples can also be analyzed rapidly by this method.

SAMPLE-HANDLING SYSTEMS

The successful application of the phosphorus analyzers just described depends on reliable delivery of a well filtered sample. Such systems are discussed in Sections 8.2 and 8.65.

The system shown in Figures 8.49d and 8.49e is capable of handling raw sewage. The primary filter is of the motor-driven vane type with alternate stationary and rotating disks, and the clearance between the plates determines the degree of filtration.

The second stage of filtering consists of two disposable cartridge filters. A checkvalve diverts the flow to the second filter when the pressure drop across the first indicates that a change is necessary. The regulating pump between the filter stages ensures a constant flow rate in difficult determinations. Provision for backflushing the system is also advisable in some applications.

The selection of a good sample-handling system from the options discussed in Section 8.2 is just as critical as the selection of the analyzer itself. Provisions for convenient

© 2003 by Béla Lipták

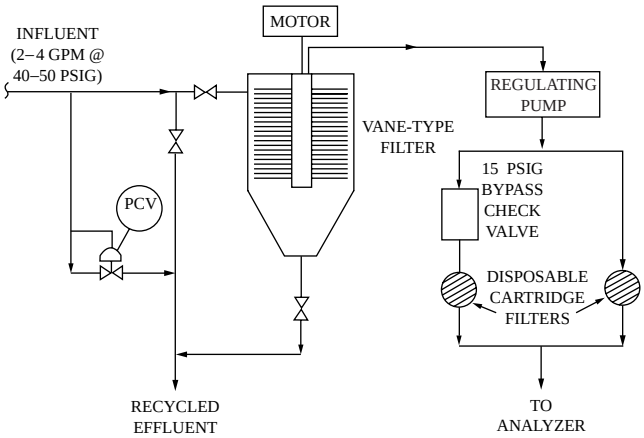

FIG. 8.49d
Raw sewage sample-handling system.

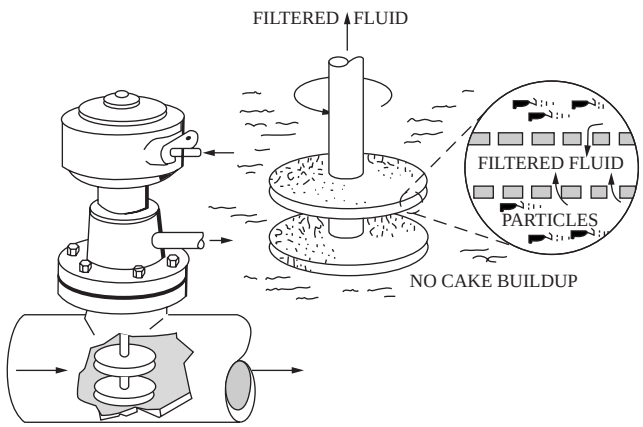

FIG. 8.49e
The rotary disc filter.

calibration are also an essential part of a complete and successful installation.

References

1. *Standard Methods for the Examination of Water and Wastewater,* American Public Health Association, New York.
2. Brody, S. S. and Chaney, J. E., *J. Gas Chromatography,* 6, 42, 1966.
3. Amirav, A. et al., Pulsed Flame Photometric Detector for Gas Chromatography, Tel Aviv University, 2001.
4. Addison, R. F. and Ackman, R. G., *J. Chromatography,* 47, 421, 1970.

Bibliography

Addison, R. F., *Chromatography,* 14, 421, 1979.

Amirav, A. et al., Pulsed Flame Photometric Detector for Gas Chromatography, Tel Aviv University, 2001.

Converse, J. G., Calibration and maintenance are part of reliable sample preparation system design, *Proc. 1992 ISA Conf.,* Houston, October 1992.

Dawson, R., *Data for Biochemical Research,* Oxford University Press, New York, 1990.

Ewing, G., *Analytical Instrumentation Handbook,* Marcel Dekker, New York, 1990.

Instrumentation and Automation Experiences in Wastewater-Treatment Facilities, EPA-600/2–76–198, Environmental Protection Agency, Washington, D.C.

Jutila, J. M., Multicomponent on-stream analyzers for process monitoring and control, *InTech,* July 1979.

Standard Methods for the Examination of Water and Wastewater, American Public Health Association, New York.

Treiber, H., Digital minilabs, *Digital Imager,* November 2000.

Wastewater Sampling for Process and Quality Control, Water Environment Federation, 1996.

Zimmermann, C. F. et al., Determination of orthophosphate in waters, Environmental Protection Agency, Washington, D.C., 1997.

© 2003 by Béla Lipták

8.50 Physical Properties Analyzers—ASTM Methods

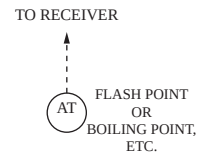

Flow Sheet Symbol

N. S. WANER (1972) **A. ALSTON** (1982) **D. E. PODKULSKI** (1995)
I. VERHAPPEN (2003)

Analyzer Type:

A. Distillation analyzer
B. Vacuum distillation analyzer
C. Horizontal still distillation analyzer
D. Simulated distillation by gas chromatography
E. Air-saturated vapor pressure analyzer—continuous
F. Air-saturated vapor pressure analyzer—cyclic
G. Dynamic vapor pressure analyzer
H. Continuous vapor—liquid ratio analyzer
I. Differential-pressure pour pointer
J. Viscous-drag pour pointer
K. Optical-cloud point analyzer
L. Freeze-point analyzer
M. Low-temperature flash-pointer analyzer
N. High-temperature flash-point analyzer
O. Octane engine comparator analyzer
P. Reactor-tube continuous octane analyzer
Q. Near-infrared inferential measurements

Potential Applications: Crude fractions (A, B, C, D, I, J, K, L, M); gasoline components/product (A, B, C, D, E, F, G, H, O, P); diesel (K, M); jet or kerosene (L, M); lube oils (I, J, N)

Reference Methods: ASTM D86 (A, C); ASTM D1160; (B); ASTM D2887/D3710 (D); ASTM D4953–90 (E, F, G); ASTM D1267 (G); ASTM D2533 (H); ASTM D97 (I, J); ASTM D2500 (K); ASTM D2386 (L); ASTM D56/D93 (M, N); ASTM D2699/D2700 (O, P)

Costs:

A. $40,000
B. $56,000
C. $31,000
D. $40,000
E. $38,000
F. $28,000
G. $26,000 to $35,000
H. $85,000
I. $37,000
J. $41,000
K. $28,000
L. $33,000
M. $44,000
N. $41,000
O. $220,000
P. $86,000
Q. $100,000

Partial List of Suppliers:

ABB Process Analytics (D, F) (www.abb.com)
Benke (A, B, E, J, K, L, M, Q) (www.benke.de)

© 2003 by Béla Lipták

Core Labs/Waukesha (H,O) (www.dresser.com)
Ocean Optics (UOP) (P) (www.oceanoptics.com)
Precision Scientific (A, B, C, E, G, I, K, L, M, N) (www.precisionsci.com)
Rotork Ltd. (C, D, G, J) (www.rotork.com)
Siemens Applied Automation (D) (www.sea.siemens.com.ia/)

INTRODUCTION

This section deals with on-stream analyzers, which measure a physical property of a process stream. More specifically, on-stream analyzers are related to ASTM Standard Test Methods for refinery processes and products. Table 8.50a provides an overall orientation of the various physical property analyzers that are available.

Prior to the introduction of on-stream analyzers, analyses were done in the laboratory on periodic grab samples, and the results were reported to the process unit operator at some later time, permitting set point adjustments of parameters such as flow, temperature, pressure, and level. Continuous on-stream plant analyzers offer many advantages over laboratory analyses, including the characteristics enumerated below.

Advantages of Continuous Analyzers

1. Continuous measurement of the stream, eliminating long time lags
2. Reduction of errors caused by unrepresentative samples or by changes in sample composition caused by sample handling
3. Elimination of human errors characteristic of nonautomated laboratory procedures
4. Ability to recognize process trends, thus permitting the automatic control of a given process variable by closed-loop control
5. Cost reductions resulting from minimization of laboratory analyses
6. Closer control resulting in smaller tolerances in final product specifications and reduction in quality "giveaway"
7. Feasibility of implementing in-line blending systems, which result in economic benefits resulting from the elimination of tankage, and from increased system flexibility and better quality control
8. Ability to provide continuous inputs to computerized process control systems for plant optimization
9. Direct measurement of process variables rather than detection of properties by inference

DISTILLATION ANALYZERS

Laboratory Measurements

Distillation analyzers were introduced to provide data on the volatility characteristics of process streams and separation efficiency of distillation units. ASTM Method D 86-IP-123 is the currently accepted laboratory standard for determining the boiling characteristics of petroleum products distilled at atmospheric pressure. The method employs a batch technique and approaches a single plate distillation process without reflux.

The petroleum products analyzed are complex mixtures of components, and a low level of fractionation is achieved. True boiling-point distillation, in columns with 15 to 100 theoretical plates and at reflux rations of 5:1 or more, produce greater separation of components. The apparatus and procedures for true boiling-point determination are not standard, are complex, take longer to perform, and are not as widely used.

Distillation curves for a few hydrocarbons are shown in Figure 8.50b along with a comparison of curves generated by ASTM Method D86-IP-123 and by true boiling-point determinations for kerosene.

ASTM Method D 86-IP-123 A sample is heated in an Engler flask at a prescribed rate. Packing is not used, and some refluxing occurs as a result of condensation (Figure 8.50c). The vapors that are produced flow through a condenser immersed in an ice-water bath, and the distillate is collected in a graduated cylinder. The initial boiling-point temperature is defined as the reading of the thermometer at the instant the first drop of condensate falls from the lip of the condenser tube.

As the higher boiling fractions vaporize, condense, and collect in the graduate, corresponding temperature readings are recorded to permit the plot of a curve of temperature vs. percent of sample recovered. The end point or final boiling point is described as the maximum thermometer reading observed during the test; it usually occurs when all the liquid has been boiled off from the bottom of the flask.

Usually, the percentage recovered does not equal the 100-ml sample charge, partly because of the inability of the apparatus to condense the lightest fractions. A curve of temperature vs. percent evaporation is determined by adding the percent of light ends lost to each of the recorded percentages recovered. The precision of this method is a function of the temperature change vs. boiling rate. Repeatability ranges from ±2 to 9°F (±1 to 5°C), and the reproducibility ranges from ±5 to 20°F (±3 to 11°C).

ASTM Method D 1160 This method provides for measurements under vacuums, ranging from 1 mmHg (133 Pa) absolute to atmospheric, to a maximum liquid temperature of 750°F (399°C). Results are not comparable with other ASTM distillation tests, although they may be converted to corresponding vapor temperature at 760 mmHg by reference to Maxwell and Bonnel vapor pressure charts.

© 2003 by Béla Lipták

TABLE 8.50a
Orientation Table for Physical Properties Analyzers

Analyzer	*Type*	*Range*	*Repeatability (+/–)*	*Flow Rate GPH (LPH)*	*Pressure PSIG (kPa)*	*Temperature F (C)*	*Cycle Time (minutes)*	*Cost (in $1000s)*	*Suppliers*
Distillation	Distillation	5–95% 100–650°F (38–343°C)	1% sample boiling range	1.2 (4.5)	20–150 (138–1035)	30°F (17°C) below IBP	5	40	Precision Scientific
	Vacuum	650–1000°F (343–538°C)	1% sample boiling range	2.3 (8.7)	50–250 345–1724	180°F (82°C) max	16	56	Precision Scientific
	Horizontal Still	5–95% 150–650°F (65–343°C)	Equal or better than ASTM	0.4 (1.5)	5–100 (35–700)	40°F (22°C) lower than IBP	2	31	Rotork
	Simulated Distillation	2–98% 0–1000°F (–17–538°C)	3–12°F (2–7°C)	4(15) (sample inject)	5–150 (35–1035)	Below expected IBP	10–30	40	Asea Brown Boveri Applied Automation Rotork
Vapor Pressure	Air-saturated Continuous	2–19 psia	0.1 psia	1.6 (6)	10–100 (69–690)	50–110°F (10–43°C)	2	38	Precision Scientific
	Air-saturated Cyclic	0–20 psia	0.05 psia	Bypass flow			9	28	Asea Brown Boveri
	Dynamic	0–20 psia 0–200 psia	Equal to or better than ASTM	10–50 (38–190)	75–500 (520–3450)	70–120°F (21–49°C)	0.75	26–35	Precision Scientific, Rotork
Vapor/Liquid	Continuous	10–30 V/L to 150°F (66°C)	0.5 V/L	2–4 (7.6–15.1)	50–150 (350–1050)	Normal Blending Range	3	85	Core Labs
Pour Point	Differential Pressure	–75–+50°F (–59–+10°C)	5°F (2°C)	2 (7.6)	<20 (138)	20°F (11°C) above pour point	5–15	37	Precision Scientific
	Viscous Drag	31–100°F (–31–+38°C)	<2°F (<1°C)	.16–1.6 (.6–6)	14.3 (100)	166°F (75°C) max	30–42	41	Rotork
Cloud Point	Optical	–13–+59°F (–25–+15°C)	1°F (0.6°C)	3–5 (11.3–18.9)	250 (1724)	20°F (11°C) above pour point	2	28	Precision Scientific
Freeze Point	Aviation Fuels	–85–+14°F (–65 to –10°C)	1°F (0.6°C)	3–5 (11.3–18.9)	250 (1724)	50–122°F (10–50°C)	3	33	Precision Scientific
Flash Point	Low Temperature	50–250°F (10–50°C)	2°F (1°C)	3.5 (13.2)	1000 (6895)	250°F (139°C) max above flash point	1–7	44	Precision Scientific
	High Temperature	140–600°F (60–316°C)	3°F (1.5°C)	1 (3.8)	10–125 (69–863)	50°F (28°C) below flash point	1–5	41	Precision Scientific
Octane	Comparator Engine Reactor Tube	ASTM Specs 2 Octane Numbers	ASTM Specs 0.1 RON	ASTM Specs 0.02 (0.06)	ASTM Specs 50–500 (350–3500)	ASTM Specs 100°F (38°C)	ASTM Specs 2	220 86	Core Labs/Waukesha UOP

© 2003 by Béla Lipták

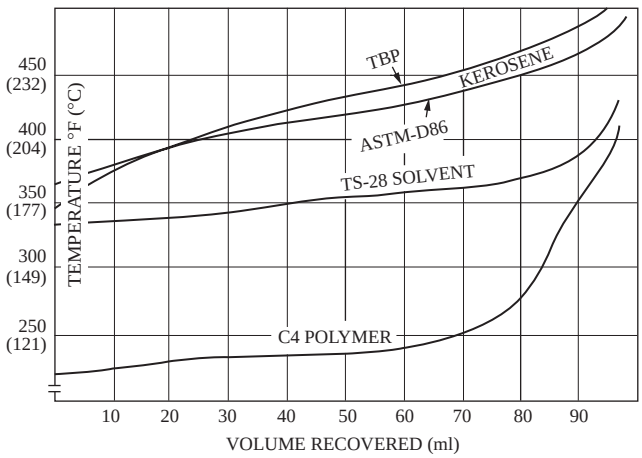

FIG. 8.50b
Distillation curves.

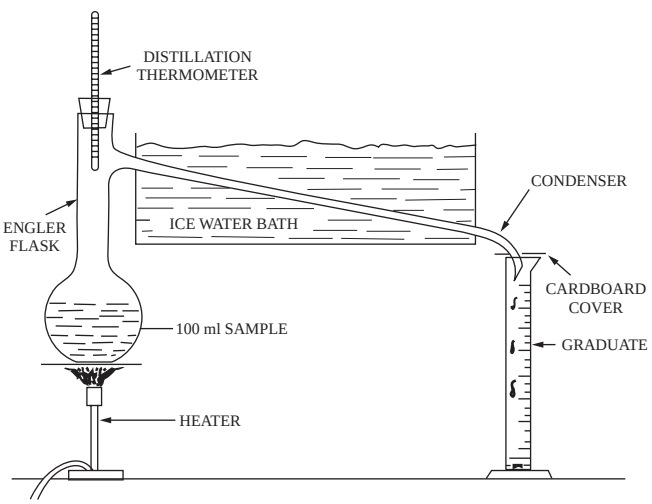

FIG. 8.50c
Apparatus for ASTM D 86 distillation test.

The sample must be moisture free and is equivalent to a volume of 200 ml at the temperature of the receiver in which the condensed overheads are collected. The sample charge is boiled at a rate that produces a recovered distillate of approximately 4 to 8 ml/min. The overhead vapors are condensed in a jacketed condenser and receiver in which the circulating coolant is maintained within ±5°F (3°C) in the range of 90 to 170°F (32 to 77°C).

Measurement of the vapor temperature is by a special Kovar®-tipped thermocouple located at the side arm of the boiling flask leading to the condenser. Temperatures for the 5, 10, 20, 30, 40, 50, 60, 70, 80, 90, and 95% recovered volumes are reported unless the liquid's temperature, measured by a mercury in glass thermometer positioned in the boiling flask, reaches a value of 750°F (399°C). In such cases, the test is terminated and the percentage recovered is also reported.

Depending on the percentage recovered and the operating pressure, repeatability varies from ±8 to 10°F (±4.4 to 5.6°C), and reproducibility is from 15 to 30°F (8.4 to 17°C). This method required considerably greater skill to obtain optimal results and is more complicated than ASTM Method D 86-IP-123.

ASTM Methods D 2887–89, D 3710–88 These methods employ gas chromatographic analysis to determine boiling range distributions. D-2887 is for compounds that value an initial boiling point higher than 100°F (55°C) and a final boiling point less than 1000°F (538°C). Sample is injected into the analysis column, and the hydrocarbon temperature is raised at a repeatable rate during the analysis. The boiling-point temperature is related to time by injecting a calibration standard with known compounds and relating their boiling points to time.

The data gathered in this are not equivalent to data from ASTM D-86 or D-1160. Those are single-plate distillations. Results are close to those obtained by ASTM D 2892, true boiling-point chromatography. Repeatability as defined by ASTM is 3 to 12°F (2 to 7°C), depending on the value of the percent recovered. Reproducibility is 6 to 24°F (3 to 14°C) based on the value of percent recovered.

ASTM D-3710 is similar to D-2887 but is applicable to gasoline and gasoline components only. The maximum final boiling point is 500°F (260°C). Conditions are modified to allow discrete measurements of isopentane and lighter compounds. Temperature is related to time in the same manner. Repeatability and reproducibility are given as values based on the temperature/percent recovered slope and can range from 2 to 10°F (1 to 6°C).

On-Line Distillation Analyzers

Continuous plant distillation analyzers may be correlated with the results obtained by the ASTM laboratory methods, but they are not an exact duplication. In the laboratory (a batch technique), the temperature (of a given percentage that has been evaporated) is read off a rapidly rising vapor temperature as the sample is being evaporated, whereas, in the plant, the analyzer measures temperatures as a continuous process in which an equilibrium has been established for the given percentage evaporated to be monitored. This improves measurement precision but not necessarily accuracy, which depends on off-line analyses.

End-Point Distillation Analyzers As shown in Figure 8.50d, the analyzer is a miniature process unit. There are two modes of operation based on the desired measurements of the percentage, which is boiled off. The following description applies to analyses of boiled-off percentages of 50% and greater. A conditioned and pressure-regulated sample is delivered at a rate of approximately 4 gal/hr (15.2 l/hr) to the top of a packed column through an inlet valve.

The inlet sample flow rate is governed by a float in a boiling pot below the column, which maintains an essentially constant level in the pot. A radiant heater boils the sample

© 2003 by Béla Lipták

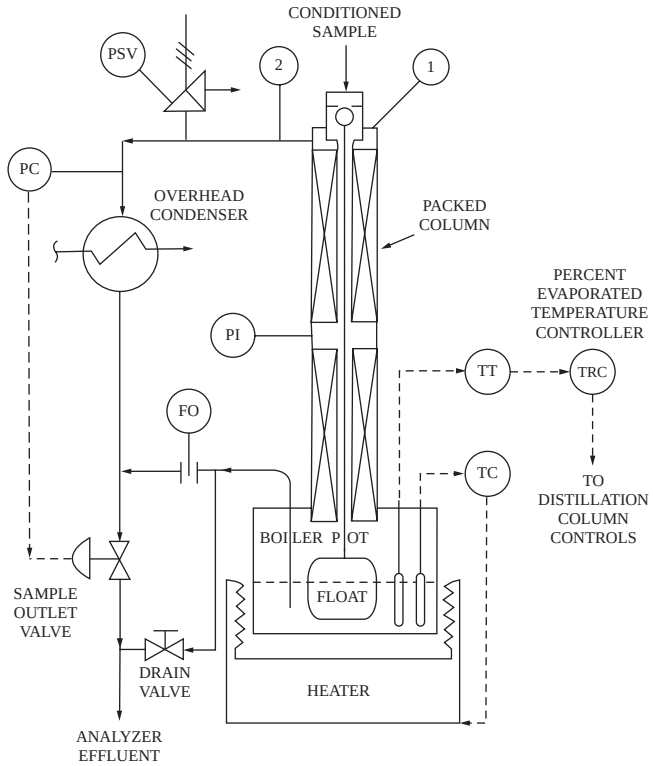

FIG. 8.50d

Packed column end-point analyzer. In an initial boiling point analyzer, the temperature is detected in location 1 and a restriction orifice is added in location 2.

in the pot under an elevated pressure, which is held constant. The overheads are condensed at these pressures. The bottoms' flow from the boiler pot is metered by means of restriction orifice upstream of the outlet control valve.

Because the orifice and the packed columns are subject to the same differential pressure, the ratio of overheads to bottoms is fixed. The orifice size and heater wattage are selected for the particular sample and for the percentage evaporated point to be monitored. The bubble-point temperature of the bottoms can be correlated with the percent evaporated point to be monitored. As the sample's percentage evaporated temperatures changes, the distillation process within the analyzers correspondingly adjusts the temperatures in the boiler pot.

For analyses of 50% boiled off and less, the analyzer operates in much the same manner. One difference is that the conditioned and pressure-regulated sample first enters a preheater coil at the top of the boiler pot and is then fed to the top of the packed column. However, a restricting orifice is located in the overhead line (at location 2) at the top of the packed column. Where required, a restrictor may also be used in the bottoms line.

A thermocouple in the overhead line (at location 1) at the top of the column measures the overhead vapor temperature and serves as the analyzer readout. By the suitable selection of restrictors and heater size, a given percentage of evaporated temperature between the 5% boiling point and the 50% point can be measured. Sample effluent may be returned to the process by an eductor or receiver and pump. A variation on this is a thin-film distillation analyzer that has the capability of measuring temperature at a set percentage boiled-off value or percentage off at a set temperature value.

Vacuum Distillation Analyzer Some hydrocarbon feedstocks have high boiling points or may decompose if boiled at atmospheric pressure. To avoid decomposition and to reduce the boiling point temperatures, the product may be distilled at a reduced pressure. Essentially, the same technique is used as shown in Figure 8.50d except that the column and boiler pot are operated under a controlled vacuum.

A conditioned and pressure-regulated sample enters the top of the column through a metering valve controlled by a float in the reboiler pot so as to maintain a constant sample level in the pot. The sample is preheated in a heat-exchanger above the reboiler pot before entering at the top of the packed column (Figure 8.50e).

A fixed-wattage radiant heater boils the sample. Overheads from the column flow through a water-cooled condenser from which a metering pump at a constant rate withdraws

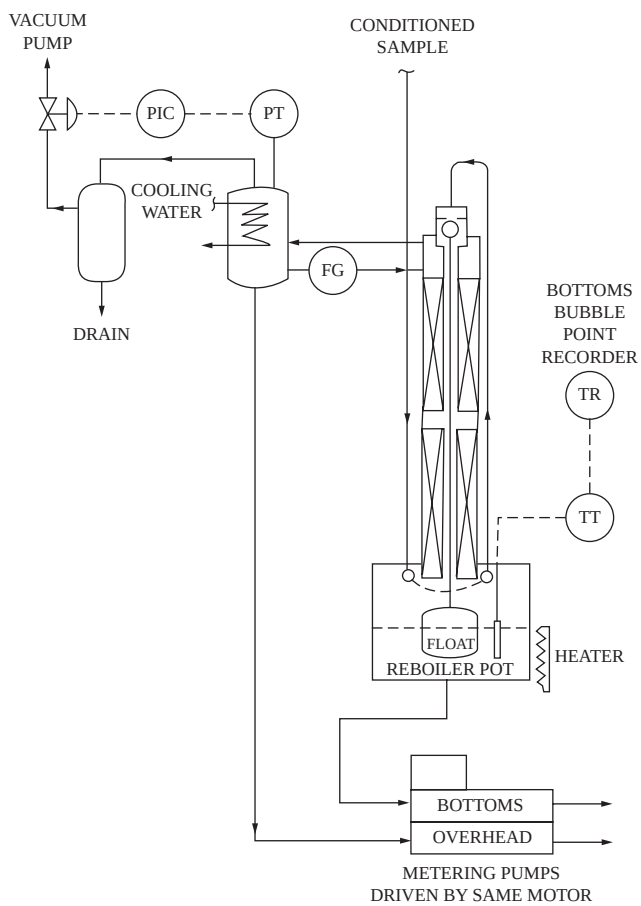

FIG. 8.50e

Packed-column vacuum distillation analyzer.

© 2003 by Béla Lipták

some of the condensate, and the remaining distillate is refluxed to the top of the column through an overflow tube.

A second metering pump withdraws the bottoms fractions at a constant rate so that the ratio of overheads to bottoms flow fixes the percentage evaporated material to be measured. Both gear pumps are driven by the same motor and maintained at a constant temperature by immersion in individually heated oil baths. A thermocouple in the reboiler pot measures the bottoms' bubble-point temperature, which may be correlated with ASTM Method D 1160.

A vacuum pump removes the noncondensable vapors from the system, a pressure controller modulates vacuum pressures, and a vacuum surge tank stabilizes the system to avoid excessive pressure fluctuation. If wide variations in product end points are expected, the heat input to the reboiler pot may be regulated by an autoformer in the heater circuit to avoid column flooding due to excessive refluxing. A sight glass in the reflux line permits observation of the reflux rate so that optimual column loading conditions may be established.

Horizontal Still Distillation Analyzer This analyzer, shown in Figure 8.50f, has two switch-selectable modes, the first of which permits the measurement of temperature at any preselected bottoms flow rate as a percentage of total sample flow rate through the analyzer. In the second mode, the percentage of bottoms to total sample flow at a specific temperature value is measured.

The distillation unit is an essentially horizontal still constructed with a series of baffles and weirs to promote separation of vapors and liquids at each compartment. The still is heated electrically. When the sample arrives at the last compartment, the vapor overheads and the liquid bottoms are at thermal equilibrium. A thermocouple in the bottoms section of the last compartment senses the temperature of distillation.

Vapor overheads leave the analyzer column at atmospheric pressure. They are condensed and pumped out of the analyzer system. The liquid bottoms are cooled, filtered, and then piped into a variable-speed pump system. Any escaping vapors from bottoms lines are condensed and returned to the bottoms pump. This prevents any significant losses in the volume of the bottoms product leaving the analyzer.

A differential pressure (dP) transducer continuously senses the level of the liquid bottoms at the suction side of the variable-speed pump. Heat exchangers ensure that the inlet pump and the variable-speed bottoms pump operate at the same sample temperature so as to minimize errors in flow measurement.

The voltage output of the dP transducer is generated by a voltage-to-frequency oscillator, which produces the pulse train that drives the stepper-motor-controlled variable-speed bottoms pump. In one control mode, the distillation temperature is preset, and the logic control varies the speed of the bottoms pump until a constant pump suction head is established. The capacity of the sample feed pump is fixed, and

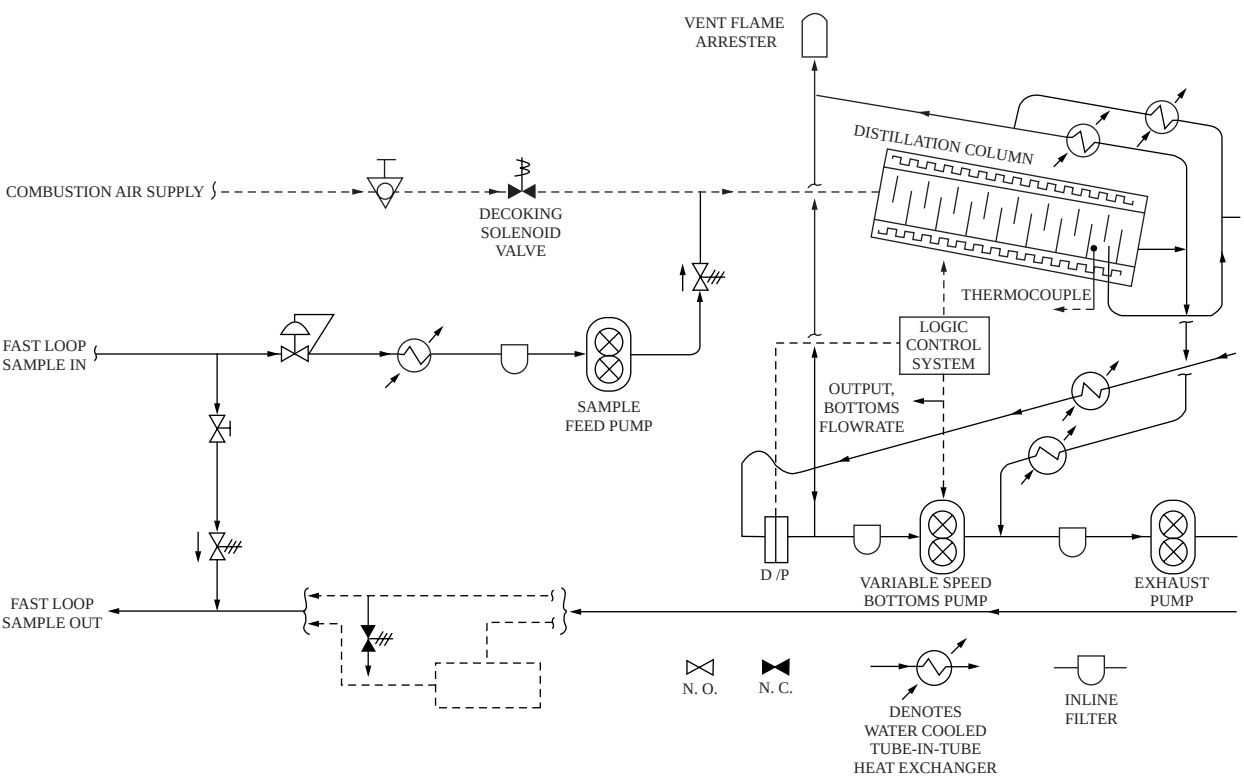

FIG. 8.50f
Horizontal still distillation analyzer.

© 2003 by Béla Lipták

the pulse rate of the bottoms pump is converted into an equivalent flow volume, permitting the computation of the percentage distilled at temperature. In the second mode, the desired speed of the bottoms pump is preset, thus establishing a specific bottoms percentage. The logic control then varies the voltage to the heater until a constant pump suction head is established at the bottoms pump.

Simulated Distillation by Gas Chromatography Temperature-programmed gas chromatography is discussed in Section 8.12 of this book. The analyzer injects a sample after the temperature-programmed oven has been cooled to ambient or subambient temperature, depending on the expected initial boiling point. The temperature is ramped at a set rate to a level necessary to elute all of the components present. The relatively nonpolar column elutes the sample to the detector in boiling-point order. The detector output is integrated with respect to a time–temperature relationship, and an output for the required temperature or percentage boiled off is calculated and provided as an output. Multiple outputs are available from this type of analyzer.

Calibration and Sampling

Techniques employed in the calibration of distillation analyzers are the standard sample method and the spot (or grab) sample method. In the latter method, a sample is drawn off the process line, and its properties are determined (standardized) by replicate tests using ASTM Method D86–IP–123. For ASTM Method D 86–IP–123, the standard sample is introduced into the analyzer, and the results are compared to the laboratory determinations.

Sampling systems include a reservoir tank for holding a standard sample and the means for its introduction into the analyzer. In addition to establishing a correlation between the analyzer readout and ASTM Method D 86-IP-123, it also serves to check analyzer performance in the event that its output is suspect. Care should be exercised to ensure that the standard sample remains stable and unaltered for the length of use.

The spot (or grab) sample technique involves the collection of samples at the analyzer without disturbing its operation and simultaneously notes the analyzer readouts with due compensation for the system response time. Analyzer readouts are then compared with laboratory determinations of the spot samples by ASTM Method D 86–IP–123. Again, care in collecting and handling the spot samples is of particular importance to ensure accurate results.

ASTM D-1160 calibrations are done in the same manner as for ASTM-86. ASTM D–2887 and D–3710 calibrations are done using a known mixture of straight-chain hydrocarbons as a way of setting the time vs. temperature relationship. The sample is injected and the area calculated for each time interval as defined in ASTM D-2887. The cumulative area for each time interval is calculated and divided by the total area and multiplied by 100. This is the percentage boiled off and corresponds to the temperature established for that point by the time vs. temperature curve established for the analyzer.

Applications

Distillation analyzers have significant use in the control of petroleum-refining processes. They have applications as varied as the production of fuel oils and the blending of gasolines, they are part of crude oil distillation units and alkylation units, and they are used for control of feedstocks and for control of the reflux ratio in fractionation towers.

Simulated distillation by gas chromatography (ASTM D-2887 and D-3710) is making large inroads into boiling-point measurement applications as it becomes more reliable and as refiners make the decision to use these measurements to control product quality instead of the laboratory-based D-86 method. They are primarily used on cut-point control and for blending component control.

VAPOR PRESSURE ANALYZER

Reid Method (ASTM Method D 323–90)

The vapor pressure of petroleum products, except for liquefied petroleum gases and fuels containing oxygenates, is usually determined by the Reid method as given by ASTM Method D 323–90. Sample handling is especially critical with very volatile products because of the hazard of loss of light ends. The method provides four different procedures based on specific applications.

Procedure A For products that have a vapor pressure less than 26 PSIA (179 kPa), a sample volume of a least 1 qt (0.95 l) but not greater than 2 gal (7.5 l) is collected and is placed as soon as possible in a bath maintained at 32 to 40°F (0 to 4°C).

The Reid vapor pressure (RVP) bomb consists of a liquid sample in a lower chamber that is coupled to an air chamber having a volume approximately four times that of the liquid and a Bourdon tube pressure gauge connected to the top of the air chamber. The liquid chamber is filled with a chilled sample and is quickly coupled to the air chamber with the attached pressure gauge.

The assembly is then immersed in a water bath maintained at 100 ± 0.2°F (37.8 ± 0.1°C). After a minimum of five minutes, the apparatus is removed and shaken vigorously, and the pressure is noted. It is then quickly reimmersed in the bath, and, at intervals of not less than two minutes, the procedure is repeated at least twice until two consecutive pressure readings are made that are within 0.05 PSI (0.35 kPa) of each other. This reading is reported in pounds RVP (PSIA). Although the pressure is approximately the true vapor pressure in PSIA for some products, it should be noted that RVP is lower than the true vapor pressure because of the loss of some light ends during sample handling.

© 2003 by Béla Lipták

Repeatability varies from 0.1 PSI (0.7 kPa) for products of 0 to 5 lb (0 to 22.5 kg) to 0.46 PSIA (3.2 kPa) for products having an RVP between 5 and 15 lb (22.5 and 67.5 kg). Corresponding reproducibility varies from 0.35 to 0.75 PSI (2.4 to 5.0 kPa).

Dry Reid Method (ASTM Method D 4953–90)

This method is a modification of ASTM D 323–90, adding the requirement that the interior surfaces of the liquid and vapor chambers be free of water. Oxygenated compounds would tend to go into the water phase and reduce the measured vapor pressure. The method also describes a semiautomatic method that has improved precision. Repeatability of the manual method is 0.72 PSI (5.0 kPa) and of the semiautomatic method is 0.26 PSI (1.8 kPa). The corresponding reproducibility is 1.0 PSI (7.3 kPa) and 0.94 PSI (6.5 kPa).

Liquefied Petroleum Gases (ASTM Method D 1267–89)

ASTM Method D 1267–89 for the determination of the vapor pressure of liquefied petroleum gases (LPGs) is usually performed at 100 ± 0.2°F (37.8 ± 0.1°C) but may be run at temperatures as high as 158°F (70°C). The use of this method is limited to products whose vapor pressure does not exceed 225 PSIG (111.6 MPa). Essentially the same apparatus is used as in the Reid method. The sample is not air saturated; however, 40% volume of the liquid sample is withdrawn from the completely filled bomb after a prescribed purging procedure to allow space for expansion of the product when it is immersed in the test bath.

The observed pressure is reported as LPG vapor pressure in pounds per square inch gauge pressure (PSIG) after corrections are made for gauge error and for standard barometric pressure at the test temperature. Repeatability is given as 1.8 PSI (12 kPa). Reproducibility is given as 2.8 PSI (19 kPa).

Air-Saturated Vapor Pressure Analyzer—Continuous

Sample is metered by a positive displacement pump at a rate of 100 cc/min through a heat exchanger immersed in a constant-temperature bath at 100°F (37.8°C) (Figure 8.50g). The sample is then sprayed into an air-saturation chamber, also immersed in the bath, where it is saturated with air. A float-controlled needle valve discharges the air-saturated sample and vapors into the vaporizing chamber and also maintains a constant level of liquid in the chamber.

The sample supply pump is double ended and designed so that the exhaust end withdraws a flow of 500 cc/min of liquid and vapor mixture from the vaporizing chamber, thus establishing the 4:1 liquid–air ratio prescribed by the RVP (ASTM D323–90) method. The pressure in the vapor chamber is sensed by a pressure transmitter, which has a calibrated output signal representing the RVP. The exhaust pump jacket is also maintained at the 100°F (37.8°C) bath temperature.

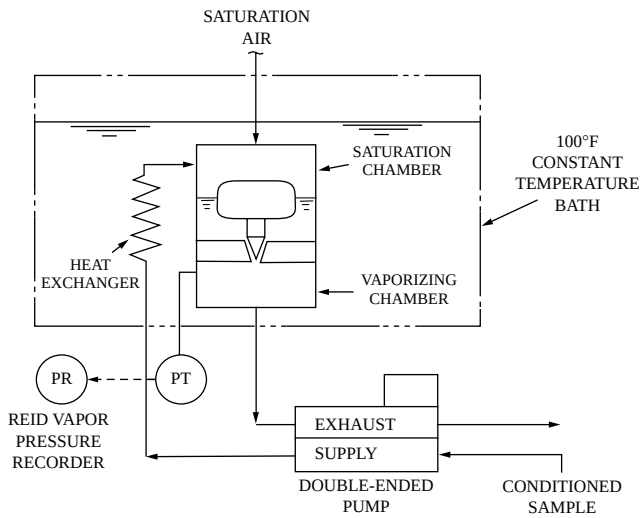

FIG. 8.50g
Air-saturated vapor pressure analyzer.

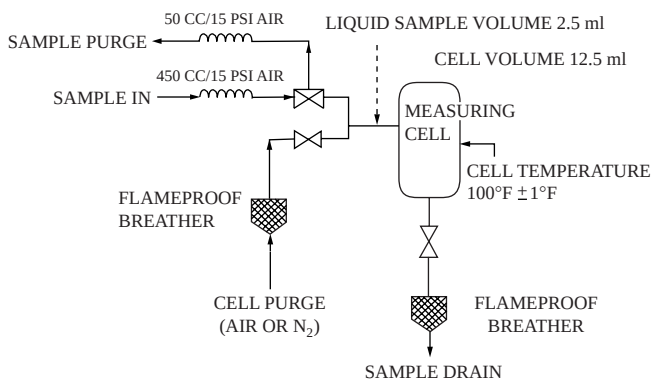

FIG. 8.50h
Cyclic, air-saturated vapor pressure analyzer.

Air-Saturated Vapor Pressure Analyzer—Cyclic

The analyzer uses a sample cell that is designed to meet the 4:1 vapor–liquid ratio. Temperature of the cell is controlled at 100°F (37.8°C) (Figure 8.50h). The analyzer first runs a fill cycle to flush out old sample. This is drained, and the cell is purged with air three times to dry it out. The air inside the cell is then allowed to come up to the cell temperature. Once again, the cell is filled with sample and allowed to come to equilibrium for three minutes. The pressure is measured and is compared to site elevation and a zero pressure measured when the cell was empty and an RVP value calculated. The cell is then drained for the start of the next cycle. The cycle time is about nine minutes.

Dynamic Vapor Pressure Analyzer

This analyzer may be calibrated to measure the vapor pressure of products covered by either ASTM Method D1267–90, ASTM Method D-4953, or ASTM Method DI267–90.

© 2003 by Béla Lipták

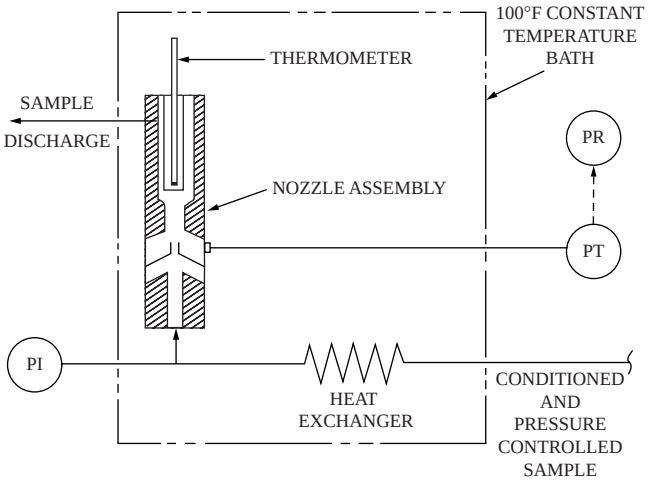

FIG. 8.50i
Dynamic vapor-pressure analyzer.

The analysis is continuous, and the sample effluent may be returned either to a pressurized line or to an atmospheric receiver tank. Incoming sample is filtered and maintained at a constant pressure (Figure 8.50i). The sample is brought to a temperature of 100 ± 0.1°F (37.8 ± 0.06°C) in the heat exchanger, which is immersed in the constant-temperature bath.

The sensing device is a modified jet pump element with the suction side dead-ended into the cell of an absolute pressure transmitter. The velocity of the sample in the small-diameter nozzle causes the pressure head to approach the vapor pressure of the least volatile component in the stream. This value is lower than the RVP, as determined by ASTM Method D323–90. By reducing the efficiency, the system simulates the selective vaporization, which occurs in the 4:1 liquid volume (vapor-liquid ratio) in the RVP test apparatus.

One of the parameters affecting the efficiency of a jet pump, eductor, or aspirator is the location of the tip of the nozzle with respect to the throat of the downstream venturi. By adjusting the location of the nozzle, the operating efficiency may be adjusted so that the analyzer readout provides an essentially one-to-one correlation with the RVP. Figure 8.50j shows the relationship of the analyzer results against RVP for various hydrocarbons and blends.

When the analyzer has to return the sample into a pressurized line, a backpressure regulator is added to maintain a constant backpressure on the system and thereby eliminate the effects of varying return line pressure. An inlet pressure of roughly 45 to 50 PSIG (311 to 345 kPa) is required when the analyzer is discharging to atmosphere and the inlet pressure regulator is set at 40 PSIG (276 kPa). When the sample is returned to a pressurized system, the inlet pressure regulator is set at a value equal to 2.5 times the return line pressure plus 40.

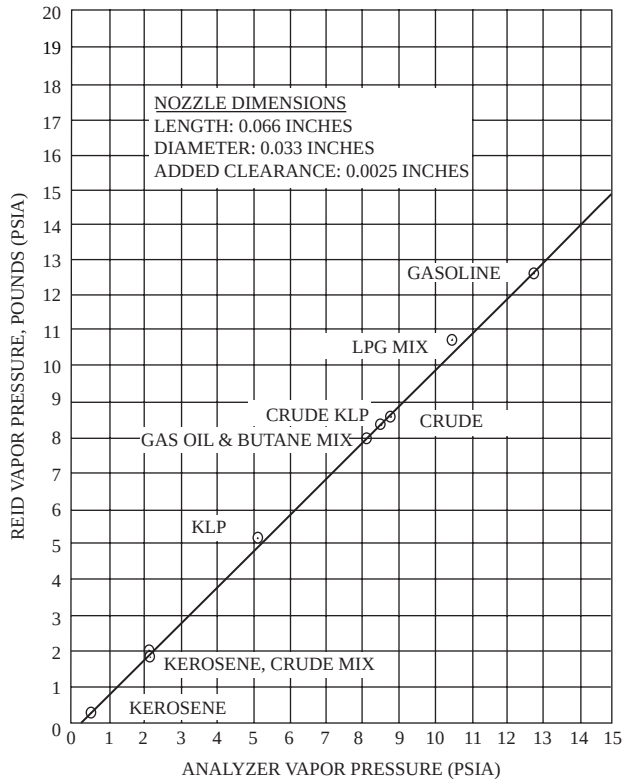

FIG. 8.50j
Dynamic vapor-pressure analyzer results.

Calibration

Calibration of the cyclic air-saturated analyzer is done using a special syringe and pure components. The pressure reading is compared to known values at the 100°F (38°C) cell temperature. The other analyzers are calibrated using the standard sample method and the spot (or grab) sample method, which are equally reliable if carefully performed.

Sample collection and handling are critical in both cases, as is the manner in which a stable and uniform standard sample is preserved during delivery to the analyzer. Standards used for the on-line analyzers should be pressured into the analyzers using a water-displacement system to prevent a vapor space from forming over the standard, thus reducing the standard accuracy.

Application

Recent environmental regulations are putting pressure on refiners to reduce the vapor pressure of gasoline components and therefore the vapor pressure of the product gasoline. This means that more of these analyzers will be installed at the crude, reformer, alkylation, and cracking units to control vapor pressure at the source. They have been used with LPG, but they have been used more extensively to monitor the vapor pressure of pipeline-transported products, thereby avoiding vapor-locking the pumps and minimizing safety

© 2003 by Béla Lipták

hazards during tanker loading operations. They may also be used to detect product interfaces at pipeline receiver stations.

VAPOR-LIQUID RATIO ANALYZERS

Front-end volatility must be closely controlled in a gasoline blend to permit the greatest use of light blending components without incurring vapor lock during operation of a gasoline engine.

The vaporization of a fuel in the carburetor of an engine is predicable neither from distillation temperatures nor from pressure tests. The curves of Figure 8.50k shows how four different fuels (with some similar properties) exhibit different volatility characteristics as determined by measuring their vapor-liquid (V-L) ratios at various temperatures. In the past, front-end volatility was determined by employing indirect measurements such as the RVP; the 10, 20, and 50% evaporated temperatures; and the temperature corresponding to a given V-L ratio (usually 20). This procedure and the required computations are time consuming, cumbersome, and inaccurate.

Volatility Test (ASTM Method D 2533–90)

The laboratory technique determines the V-L ratio by direct measurement for a given reference temperature. ASTM Method D 2533–90 uses a special burette constructed with a stopcock at the top, 0.5 cc graduations, a short bottom arm fitted with a rubber septum, and a long bottom arm connected to a 250-ml leveling bulb by rubber tubing. The burette is filled with pure dry glycerin, and a sample of 1 cc or less is injected into the burette through the rubber septum by a hypodermic syringe.

The burette is then placed in a controlled-temperature bath. As the sample vaporizers, the 250-cc leveling bulb, referenced to atmospheric pressure through the drying tube, is raised or lowered to maintain absolute, which compensates for the prevailing barometric pressure. The volume of vapor is indicated on the beret's graduations, and, because the liquid volume injected is known, the V-L ratio can be calculated. Repeatability for a V-L ratio of 20 using glycerol as the burette fluid is ±4.8°F (2.7°C).

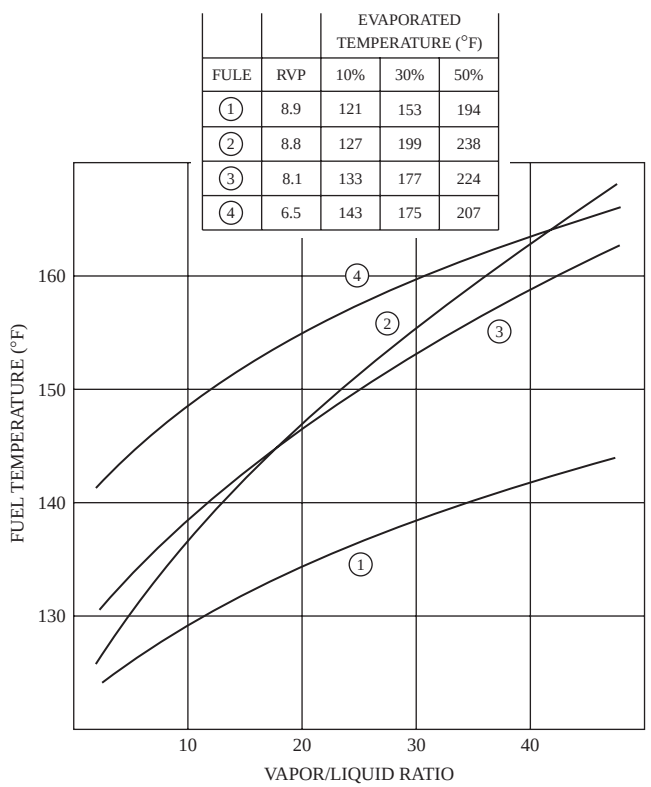

FIG. 8.50k
Volatility effects on gasoline vaporization.

Continuous Vapor–Liquid Ratio Analyzer

Figure 8.50l shows a block diagram of the analyzer. A slipstream from a sample loop is conditioned and cooled to approximately 35 to 40°F (2 to 4°C) before it enters a metering gear pump. The differential pressure across the pump is controlled to guarantee the constant delivery of liquid sample to a vapor-liquid separator at a rate of 25 cc/min. The vapor-liquid separator is enclosed in a constant temperature bath controlled at the desired test temperature.

Vaporization occurs at or near atmospheric pressure, with the residual liquid phase being discharged through a liquid seal, and the vapors are measured by a low-pressure drop flowmeter. The meter is maintained at 200°F (93°C) to prevent condensation and to establish a temperature reference for vapor flow measurements. With the inlet liquid flow rate fixed, the V-L ratio may be computed after compensations are made for the vapor temperature and the barometric pressure. In addition to computing the V-L ratio, the deviation of V-L from a preselected V-L set point is also displayed and provided as an output signal.

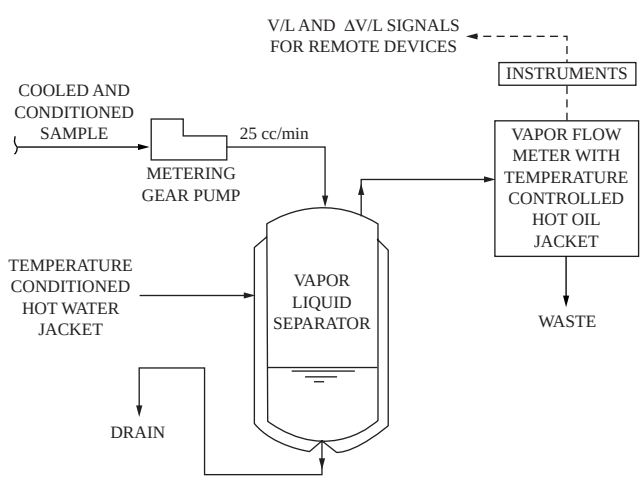

FIG. 8.50l
Continuous vapor-liquid ratio analyzer.

© 2003 by Béla Lipták

Calibration and Application

A V-L analyzer may be calibrated by the introduction of a sample of known volatility or by the grab sample technique.

These analyzers are primarily applicable to in-line gasoline blending operations. An in-line blending system offers both economic advantages and greater flexibility, speed, and ease in switching blend formulas to meet production requirements. Although precise metering systems provide the means for implementing an in-line blending system, the final blend properties are still only implied rather than precisely known. Vapor pressure alone or in combination with distillation characteristics has been shown to be insufficient to provide efficient control of front-end volatility, because of inaccuracies and lags.

The ability to control light components during blending to meet environmental requirements for volatility provides a very significant economic incentive. A V-L analyzer, in an in-line gasoline blending system, may be used to reset the set point of a butane flow control system.

POUR-POINT TEMPERATURE ANALYZERS

Pour-Point Test (ASTM Method D 97–87)

The standard laboratory procedure for measuring the flow characteristics of petroleum oils is given in ASTM Method D97–87. The sample must be heated without stirring to 115°F (46°C) or 15°F (83°C) above the expected pour-point temperature before starting the test. A thermometer immersed in a jacketed sample test jar and a cooling bath is used.

The cooling rate of the sample is fixed as it is examined at 5°F (3°C) intervals to ascertain whether it will flow when the test jar is tilted. When no sample movement is detected in the tilted jar after a five-second interval, the pour point is reported as 5°F (3°C) above the indicated temperature. All pour-point values are reported in multiples of 5°F (3°C). This point corresponds to a viscosity of about 500,000 cSt. Repeatability is given as 5°F (3°C) and reproducibility as 10°F (6°C).

Pour-point analyzers were developed in an attempt not only to automate a laboratory procedure for process control but also to improve the accuracy of such measurements.

Pour Point by Differential Pressure

This analyzer (Figure 8.50m) is cyclic in operation, with one cycle consisting of five basic sequences. The analyzer is programmed so that it resets to sequence no. 1 on startup or on interruption of any kind. The sequences are as follows:

1. *Forced drain sequence.* Power to the thermoelectric cooler (T/E) module is reversed, warming the cell and draining all of the residue.

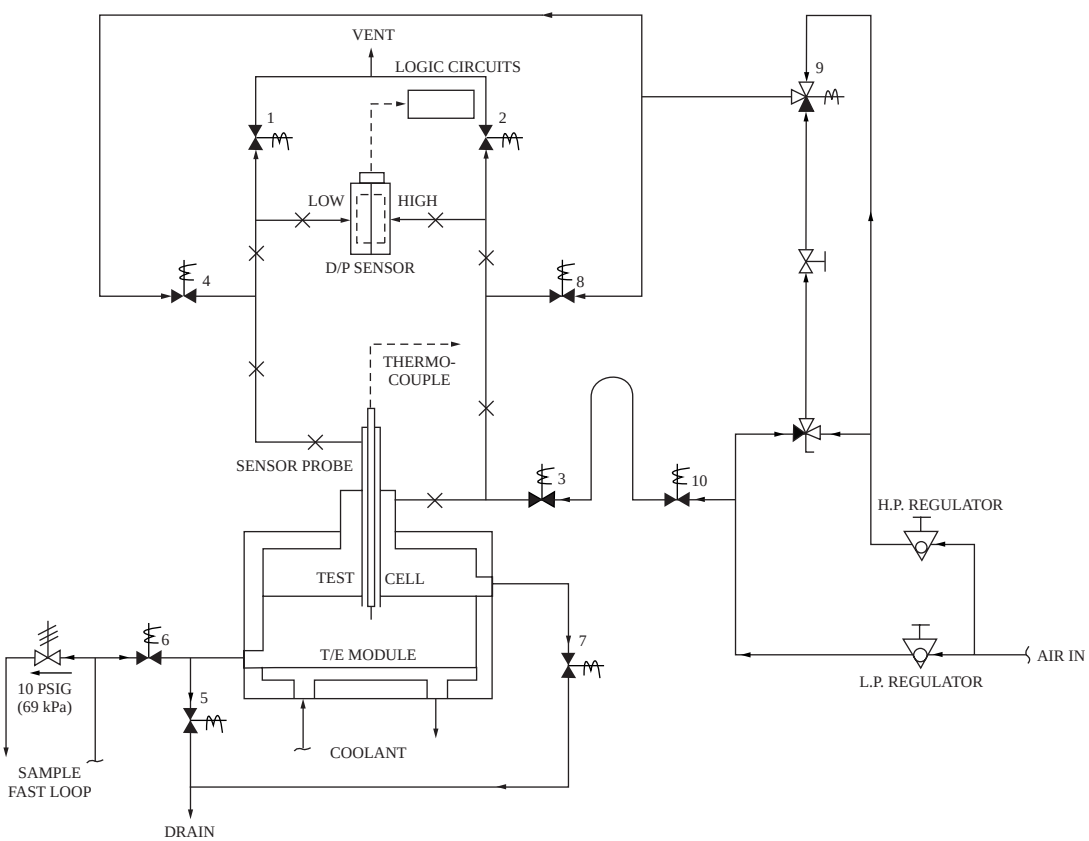

FIG. 8.50m
General pour pointer.

© 2003 by Béla Lipták

2. *Fill sequence.* The T/E module continues to heat the cell. Depending on product viscosity, either low- or high-pressure air is applied to the test cell while sample flows into the cell and out to drain by way of the overflow. This air pressure prevents the sample from entering the sensing lines of the analyzer.
3. *Level sequence.* Air is used to apply pressure to the surface of the sample and force surplus produce out to drain. Power to the T/E module is applied at normal polarity to initiate sample cooling. At termination of this sequence, all valves deenergize, and the sensing probe is submerged below the surface of the sample.
4. *Equalizing sequence.* The test cell, the differential pressure (dP) sensor, and all lines connecting these two components are vented to atmosphere, establishing a condition of zero differential pressure in the sensing system. At the end of this sequence, all valves close. Low-pressure air is held between two of the valves.
5. *Pulse sequence.* The low-pressure air trapped between valves expands into the test cell, producing a momentary pressure pulse against the surface of the liquid outside the sensor probe and against the high pressure diaphragm of the dP sensor. The output voltage of the dP sensor rises immediately, reflecting this pressure pulse.

The pressure pulse on the surface of the liquid also tends to push liquid into the sensor probe, compressing the air inside the probe. As the sensor probe is connected to the low-pressure diaphragm of the dP sensor, this results in a reduction of the output voltage of the dP sensor.

The control logic of the analyzer has a built-in fixed time delay that gives the sample time to compress the air inside the sensor probe after each pressure pulse. The output of the dP sensor is then compared to an adjustable set-point voltage. If the output of the dP sensor is below set point, another equalizing sequence and another pulse sequence occur.

As the sample cools, its resistance to flow increases, and its ability to compress the air inside the sensor probe decreases. This results in an increase of output voltage from the dP sensor. Eventually, this voltage exceeds set point. A peak-holding relay trips, and the analyzer resets to the forced drain sequence to begin another cycle. A thermocouple installed inside the sensor probe measures the sample temperature at all times. Pour-point temperature is the lowest temperature attained in each measurment cycle.

Viscous-Drag Pour Pointer

Sample flows into a 23-ml cup in which an alloy ball is suspended. A thermocouple is attached to the surface of the ball to sense sample temperature. A thermoelectric cooler removes heat from the sample as the cup turns. When the sample reaches the pour point, the viscosity is great enough to turn the ball, deflecting a light beam that is aimed at the ball and reflected to a detector. The analyzer notes the temperature and then adds 5°F (3°C) to the value to conform to the ASTM requirements. After the pour point is sensed, power to the thermoelectric module is reversed. The sample is heated and flushed out prior to initiation of the next cycle.

Calibration

Either the standard or the grab sample method is suitable. The convenience of a locally available standard sample provides a rapid check on the analyzer performance as well as serving as a means of calibration. The greater initial cost for this feature should be weighed against the delay incurred in obtaining a laboratory analysis of the spot sample.

The repeatability of ASTM Method D 97–87 for pour point is only about 5°F (2.8°C), and its reproducibility is only 10°F (5.6°C). To improve the accuracy of the ASTM results, a sufficient number of determinations is advisable, because the precision of the process analyzer usually exceeds the accuracy of the laboratory method.

Application

Pour-point temperature measurements are used to characterize the heavy end of fuel oil cuts from vacuum and atmospheric distillation processes. Fuel oil grades 1 through 4 are affected by these specifications. When a product is sufficiently free of wax that a cloud-point determination becomes meaningless, the pour point may be used as an index of the temperature at which flow will be impeded due to semi-solidification rather than by the formation of wax crystals.

CLOUD-POINT ANALYZERS

Cloud-Point Tests (ASTM Method D 2500–88)

This method is applicable to products with a cloud point below 120°F (49°C) that are transparent in a layer 1.5 in. (37.5 mm) thick. A cylindrical, flat-bottomed, clear glass test jar 1.25 in. (31.3 mm) in diameter by 4.75 in. (118.8 mm) long, and having a scribed sample fill line 2.125 in. (53.13 mm) above the inside bottom surface is used. A cork holds a thermometer coaxially in the test jar so that its bulb rests at the bottom.

A watertight jacket with an 0.25 in. (6.25 mm) thick cork or felt pad at the bottom holds the test jar when it is immersed in a cooling water bath. The sample must be dried at a temperature at least 25°F (13.9°C) above the approximate cloud point so as to remove any moisture and minimize trace water-haze formation. The test jar is fitted with a cork or felt ring approximate 0.1875 in. (4.69 mm) thick, which is positioned 1 in. (25.4 mm) from the bottom to keep it centered in the jacket.

The test is begun by placing the jar vertically in a 30 to 35°F (−1.1 to 1.7°C) water bath so that the jacket projects no more than 1 in. (25.4 mm) from the bath liquid. At intervals

© 2003 by Béla Lipták

of 2°F (1.1°C), the jar is quickly but gently removed and examined for formation of a wax haze. (This examination should take 3 sec at most.) A water haze is generally uniform throughout the sample, whereas a wax crystal haze always appears first at the bottom of the jar.

If the cloud point is not detected when the sample reaches 50°F (10°C), the sample is transferred to a second bath, which also contains a test jacket, and is maintained at 0 to 5°F (−17.8 to −15°C), and the test is continued. Successively lower temperature baths are used as required for low-temperature cloud-point products. The temperature at which a distinct wax haze is first observed, expressed in increments of 2°F (1°C), is reported as the cloud point. For gas oils, repeatability is 4°F (2°C), and reproducibility is 8°F (4°C). For other oils, both repeatability and reproducibility are 10°F (5.6°C).

Optical Cloud-Point Analyzer

The cloud-point analyzer (Figure 8.50n) detects the temperature at which wax crystals first appear as a liquid hydrocarbon sample is cooled. A measuring cycle begins when a three-way solenoid valve, which normally circulates a slipstream sample, is energized and introduces sample into the test cell. After the cell is flushed clear of all residue from a previously tested sample, the solenoid valve deenergizes, and a thermoelectric module reduces sample temperature until the analyzer detects the presence of wax crystals. At that point, the cloud-point temperature is represented as the lowest temperature the sample attains, as measured by a thermocouple, and the next measuring cycle is initiated.

The detection system is based on a light beam that is directed through a polarizing lens, through the sample cell and a second polarizing lens, and into a photocell. The electrical resistance of the photocell varies with the amount of light to which it is exposed.

Polarizing lenses permit only light vibrating in a single plane to pass through them. For example, light rays may be controlled so they vibrate only in a vertical plane if the transmission axis of the lens is vertical. If two lenses are installed so that the axis of light transmission of the second lens is perpendicular to that of the first, no light rays will pass through the second lens. The test cell lenses are assembled in this manner, and the photocell senses the presence of light.

As the sample is cooled, it eventually reaches the temperature at which crystals of ice and/or wax appear. These crystals reflect some light rays and bend others so that the plane of vibration of some light rays changes as they pass through the crystals. Some of this reoriented light then passes through the second polarizing lens and to that photocell.

Ice crystals are doubly refractive. As light rays pass through them, ice crystals will change the path of the light rays several times. However, ice crystals have very low refractive angles, so they do not seriously affect the critical direction of the light rays as they approach the second lens. Wax crystals are also doubly refractive but have very high angles of refraction and, therefore, have a very pronounced effect of the light rays passing through them.

The photocell, which senses little light passing through a crystal-free sample, will detect quantities of light rays passing through the lenses as a result of the presence of ice crystals and very large quantities of light as a result of the presence of wax crystals. The photocell, therefore, signals the first appearance of wax crystals by a significant change in its electrical resistance.

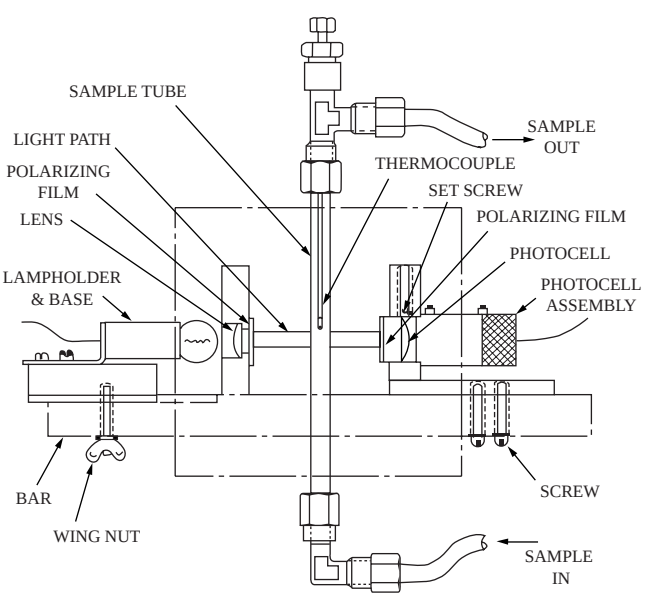

FIG. 8.50n
Optical cloud-point analyzer.

Calibration and Application

The technique used to calibrate pour-point analyzers is also used to calibrate cloud-point analyzers. The measurement of the cloud point applies only to petroleum oils that are transparent in layers 1.2 in. (37.5 mm) thick and contain paraffin waxes or other compounds capable of forming crystals prior to total solidification. Its major application has been to gas oils and cycle oils not only to meet specifications but also to facilitate product transport and to prevent filter clogging during cold weather.

FREEZING-POINT ANALYZER

Aviation Fuel Tests (ASTM Method D 2386–88)

The freezing point as defined by this method is the temperature at which the last hydrocarbon crystal (formed during cooling) melts after the sample temperature is allowed to rise. This temperature must be within 3°C (5.4°F) of the temperature at which the appearance of hydrocarbon crystals is first observed.

A jacketed clear-glass tube is filled with either dry air or nitrogen at atmospheric pressure. The tube's outer diameter (OD) is 30 mm, and the tube's inner diameter (ID) is 18 mm,

© 2003 by Béla Lipták

with a 2-mm space between tubes. The overall length is 237 mm. The plug in the sample tube holds a total-immersion thermometer and a stirring rod formed with three spiral loops at the bottom and positioned slightly below the thermometer bulb. The tube is filled with 25 cc of fuel and placed in a clear vacuum flask (70 mm ID and 280 mm long) containing a coolant such as alcohol or solid carbon dioxide.

The sample is stirred vigorously during cooling, and the temperature at which hydrocarbon crystals first appear is noted, ignoring any haze that may form at about 14°F (–10°C) as a result of dissolved water in the sample. The sample tube is then removed and allowed to warm up slowly while the sample is continuously stirred. The temperature at which the last crystal disappears is reported as the freezing-point temperature, provided it is within 3°C of the crystal formation point temperature. Otherwise, the test must be repeated. Results are reported in increments of 0.9°F (0.5°C). Repeatability is 1.8°F (1°C) and reproducibility is 4.5°F (2.5°C).

Freezing-Point Analyzer for Aviation Fuel

The principle of measurement is exactly the same as that of the cloud-point analyzer. The sample cell is cooled by a mechanical refrigeration unit, which is supplied with the analyzer. At detection of the cloud point, the power to the thermoelectric module is removed, and the sample is allowed to warm up. As the crystals disappear, the light falling on the photocell is reduced. Once the light falls below a threshold level, the cycle is terminated, and the freeze-point value is updated.

Calibration and Application

Calibration of the fuel analyzer variation should be based on the comparison of analyzer readouts with multiple laboratory test results. Its principal application is in the processing of aviation fuels such as JP-4, kerosenes, and similar products. Determination of purity is needed in the production of benzene, toluene, ethylbenzene, o-xylene, p-xylene, and phthallic anhydride. These materials must be able to be supercooled and have a specified freezing-point temperature.

Calibration of hydrocarbon purity analyzers is best achieved by using a sample of known purity. A certified standard thermistor may also be used if a sample of known purity is unavailable. Comparison with the ASTM methods can also establish the purity of a sample, which can then be used for analyzer calibration.

FLASH-POINT ANALYZER

Flash-Point Tests (ASTM Methods D 56–90 and D 93–90)

Plant analyzers are intended to correlate with ASTM Method D 56–90 (Tag closed tester) and ASTM Method D 93–90-IP-34/85 (Pensky–Martens closed tester). ASTM Method D 56–90 is for materials with a viscosity less than 5 cSt at 104°F (40°C) and a flash point below 299°F (93°C). A sample of 50 cc is used at a temperature of at least 20°F (11°C) below the expected flash point.

The sample cup is immersed in a bath whose temperature may be raised at a prescribed rate. Thermometers measure the bath and sample temperature. The sample lid prevents loss of sample vapors and directs a small flame into the cup periodically. The flash point is defined as the lowest sample temperature to cause ignition of the vapor above the sample at 1 atm absolute.

Repeatability is 2°F (1.1°C) for flash points below 140°F (60°C) and 3°F (1.7°C) for flash points between 140 and 190°F (60 and 93°C). Reproducibility is 6°F (3.3°C) for flash points below 55°F (13°C), 4°F (2.2°C) for flash points between 55 and 139°F (13 and 59°C), and 6°F (3.3°C) for flash points from 140 to 190°F (60 to 93°C).

The Pensky–Martens closed tester is for materials with an indicated flash-point temperature as high as 698°F (370°C). Approximately 4.2 in.^{3} (6.7×10^{-5} m^3) of sample is used, and the sample cup is heated directly by either a gas or electric heater at a prescribed rate. The sample cup lid is designed to support a sample stirrer, a mercury-in-glass thermometer, and an apparatus for periodically exposing the vapor above the sample to a test flame. The repeatability is 10°F (5.5°C) for materials with a flash point above 220°F (104°C) and the reproducibility is 15°F (8.5°C).

Low-Temperature Flash-Point Analyzer

Sample is fed to the analyzer's heating chamber at a constant rate, and air is added at a rate of 600 cc/min (Figure 8.50o). The air-sample mixture is heated at a controlled rate before it enters the flash cup and overflows to maintain a constant level. The vapor rises into the vapor space and is periodically exposed to a high-voltage spark. Thermocouple 1 in the flash cup measures the temperature of the air-sample mixture, and thermocouple 2 in the vapor space responds to the temperature rise when vapor ignition occurs.

When the sample is heated to its flash point and its vapor ignited, the temperature in the vapor space increases. This shuts

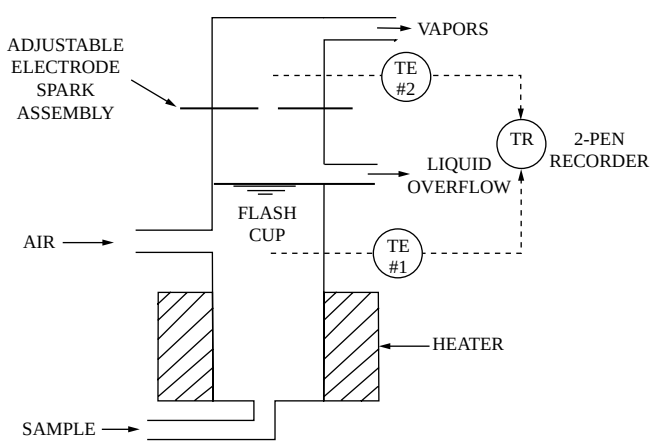

FIG. 8.50o
Low-range flash-point analyzer.

© 2003 by Béla Lipták

the heater off and causes recorder pen 1 (to which thermocouple 1 is connected) to be driven downscale. The peaks of the resulting sawtoothed record indicate the flash-point temperature for each analysis cycle.

This design is mounted on a frame with all accessory components piped and wired for field installation. The accessories include (1) a sample conditioning system to filter and coalesce free water from the sample, regulate sample pressure, and indicate coalescer bypass flow, (2) a mechanical refrigeration system and temperature controller to cool the sample below its flash point, (3) an air compressor, filter, and flowmeter to supply combustible air, (4) a duplex positive-displacement pump to provide a constant rate of sample flow to the analyzer and return analyzer effluent and coalescer bypass to the pressurized process line, and (5) block, check, relief, and backpressure valves for isolation and the ability to withdraw sample for calibration.

High-Temperature Flash-Point Analyzer

Sample from a slipstream is metered to the system at a constant rate by one head of a duplex positive-displacement pump and is preheated to a fixed temperature below the flash point as determined from the preceding analysis. It is mixed with air at a rate of 1500 cc/min. A final heater provides the additional heat required to bring the air-sample mixture to the flash-point temperature. The liquid entering the flash chamber is returned to process by the second head of the duplex pump, and the rising vapors are exposed to a high-voltage spark every 10 sec.

Ignition is detected by the deflection of a diaphragm caused by the combustion pressure pulse. The control circuit increases or decreases the final heater output depending on whether ignition has occurred. At the same time, the preheater controls are also adjusted to maintain the desired temperature differential. Flash-point temperature is sensed by a thermocouple in the flash chamber liquid and displayed on a recorder chart.

Calibration and Application

Either the spot sample or standard sample method may be used. In either case, care must be exercised when a low-flash-point sample is used so as to prevent loss of light ends. The analyzer can be applied to the control of crude and vacuum distillation, dewaxing, solvent extraction and stripping, deasphalting, blending, residual fuel oil processing, and pipeline interface detection.

OCTANE ANALYZERS

Laboratory Tests (ASTM Methods D-2699 and D-2700)

Treatment of this subject will be brief because of the vast complexity involved. Basically, two methods are employed in which in a standard engine with an unknown fuel is compared with a standard or reference fuel. One method (ASTM Method D-2699) yields a motor octane number (MON) in which the engine is run at 900 rpm, and the second method (ASTM Method D-2700) provides a research octane number (RON) in which the engine is run at 600 rpm.

The difference in octane number obtained by these methods (the spread) is indicative of city driving at low speeds as compared to highway engine performance. Standards fuels are based on normal heptane (zero rating) blended with isooctane (100 rating), with the octane number equal to the percentage of isooctane in the blend. When the unknown fuel produces the same knocking as a standard fuel blend, it is rated equal to the octane rating of the standard blend. The RON is higher than the MON, with the spread increasing with increasing octane numbers.

Standard Engine Octane Comparator Analyzer

These analyzers are based on ASTM Method D-2885, an online comparator system, using a standard engine with a modified carburetor fuel delivery system and standard detonation pickup and knockmeter. Comparison is made between the process stream and a prototype fuel, which serves as the standard or octane number reference point from which an octane number difference is determined as the analyzer readout. Figure 8.50p illustrates the equipment diagram for such an analyzer.

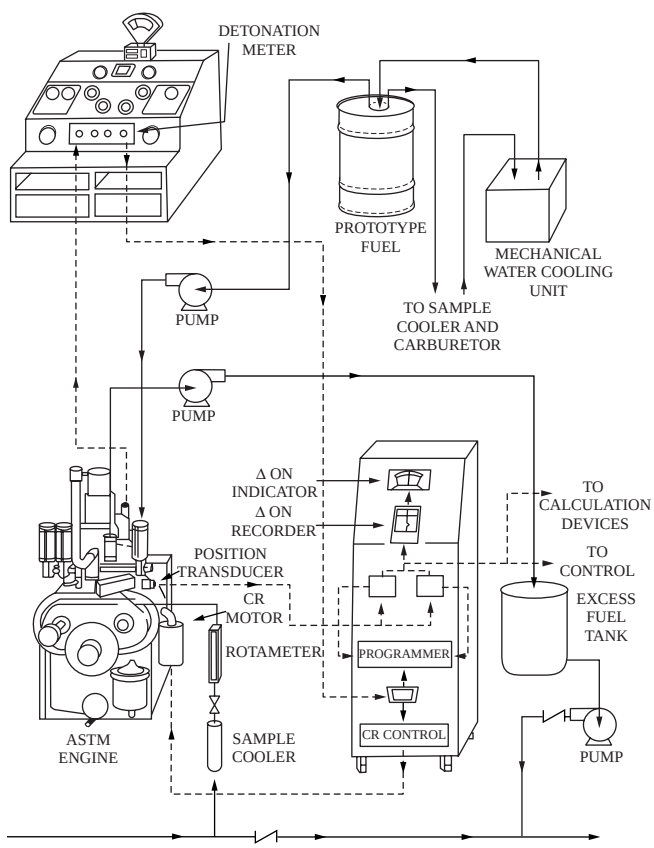

FIG. 8.50p
Octane analyzer equipment.

© 2003 by Béla Lipták

System accuracy depends on the performance of the standard engine, which must be properly maintained for optimal system operation. Also, the prototype fuel octane number should be determined to within ±0.1 ON (octane number) or better, because it serves as the reference for stream comparison measurements.

Reactor-Tube Continuous Octane Analyzer

This analyzer monitors the reactions that precede engine knocking, the parameters of which may be controlled and correlated with octane number. A fuel and controlled air volume mixture is delivered at a rate of 1 cc/min to a reactor tube maintained at an elevated temperature. Partial oxidation reactions in the tube produce a peak temperature, the location of which is related to octane number.

Higher-octane fuels cause the peak temperature to move away from the tube inlet, whereas increasing the reactor tube pressure moves the peak closer to the tube inlet. Consequently, if the temperature peak location is fixed by varying the reactor tube pressure as fuel octane number varies, the pressure may be correlated with octane number and used as the analyzer readout. This is accomplished by locating two thermocouples in the tube 1 in. (2.54 cm) apart and equidistant from the temperature peak. Any movement of the peak due to a change in fuel octane rating is sensed by a differential temperature controller and causes a compensating change in reactor tube pressure to restore the temperature peak location.

Calibration and Application

The on-line comparator engine automatically calibrates itself by running the proto fuel during its operation. The reactor tube analyzer requires a similar source of calibration gasoline of known octane.

These analyzers can trim octane *give-away* during blending to approximately 0.1 octane above specification requirements. A more important application is to measure the octane of blending components such as reformate, alkylate, and catalytic cracked gasolines so that these units optimize their production.

NEAR-INFRARED ANALYZERS

A detailed description of this category of analyzers is presented in Section 8.27. Near-infrared (NIR) analyzers do not directly measure the physical properties, such as boiling, pour, or flash points. Instead, a model is utilized that provides a relationship between the property of interest and the absorption of near-infrared radiation at one or more wavelengths in the spectrum, which is measured by the analyzer. Consequently, the NIR analyzers represent a secondary technique of measurement.

Chemometrics

Today's powerful microprocessors operating in combination with CCD detector arrays make it possible to capture a full spectra of light vs. one wavelength. In addition, rugged fiber optic probes (Section 8.23) make it possible to measure composition and other process properties by detecting the changes in spectra. The approach used in modeling these relationships is called *chemometrics* and is now an entire field of study for chemists and statisticians. Chemometrics uses mathematical tools and algorithms such as partial least squares (PLS) to assist in identifying correlation between the often small changes in the received spectra and the property of interest. The most commonly used part of the spectrum used for these measurements is the near infrared.

The process of finding such correlation involves the comparison of a large number of process samples that are measured by conventional means while their NIR spectrum is also measured. It is critical that the sample set cover all representative operating conditions that are expected during the operation of the plant; the model is only as good as the data on which it is built. The confidence level of predicting the correlation outside the bounds of the sample set is still relatively low.

Once sufficient samples and spectra have been gathered, this data set is divided into a modeling data set and a validation data set. (One must not use the same data to prove a model as one did to create it, or it is not really a test.) The modeling set is then mathematically manipulated, often taking first and second derivatives of the spectra as a form of *normalization* and to reinforce the magnitude of the changes between the separate wavelengths measured, and compared against the change in the actual data. The software and operator are normally able to identify a combination of wavelengths that vary in a predictable way against the modeling data set. This can be that one wavelength increases while another decreases, that the ratio of two wavelengths changes, or a combination of these affects.

After a model has been identified, it is tested against the validation set to confirm that it indeed predicts the property of interest reliably. If it does, it is ready to be installed in the field and used for process control.

Calibration and Application

The calibration of these analyzers is valid only over the range of the model for which the relationship was established. Therefore, to avoid errors, one should not extrapolate beyond this range. Because of the flexibility of this technique, it has been applied to most of the physical property measurements discussed in this section.

© 2003 by Béla Lipták

Bibliography

Cardis, T., On-line flash point analyzer for refinery applications, *Proc. Analysis Div. Spring Symp.*, ISA, 2000.

Clevett, K. J., *Process Analyzer Technology*, John Wiley & Sons, New York, 1986.

Floyd, J. M., On-line high Reid vapor pressure analyzer, *Proc. 1992 ISA Conf.*, Houston, TX, October 1992.

Gates, S., *Laboratory Applications Using the IBM PC*, Prentice Hall, Englewood Cliffs, NJ, 1989.

Huskins, D. J., *General Handbook of On-line Process Analyzers*, Ellis Horwood Ltd., New York, 1981.

Johnson, B. and Melda, K., "Process Simulated Distillation—5 Times Faster," *Proc. Analysis Div. Spring Symp.*, ISA 2002.

Mix, P. E., *The Design and Application of Process Analyzer Systems*, John Wiley & Sons, New York, 1984.

© 2003 by Béla Lipták

8.51 Raman Analyzers

R. MANOHARAN, N. K. SETHI (2003)

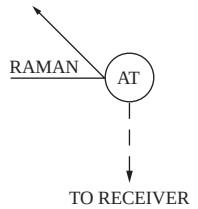

Flow Sheet Symbol

Process Fluids:	Liquids, powders, slurries, emulsions (gases)
Operating Pressure:	Analyzer (ambient), sample interface (3000 PSI)
Operating Temperature:	Analyzer (0 to 50°C), sample interface (350°C)
Humidity Limitations:	20 to 100% noncondensing
Calibration Transfer:	Intra-analyzer transfer after maintenance and transfer between analyzers
Sample Interface:	Invasive, noninvasive
Wetted Material:	Stainless steel, titanium, Hastelloy® and Kynar® probe body, sapphire and quartz windows or lens
Fiber Optics:	Low-hydroxy silica, multimode fibers, hundreds of meters
Update Time:	A few seconds to minutes
Online Analysis:	Yes
Warm-Up Time:	60 min
Measurement:	Continuous
Repeatability:	0.1% or less
Linearity:	Over the entire measurement range
Laser Safety:	Required
Costs:	Analyzers for process applications cost $60,000 to $150,000, depending on the packaging, ruggedness, availability of analyzer standardization, and availability of simultaneous multichannel capability. A benchtop, low-resolution Raman instrument costs $20,000 with probes and other accessories. Laboratory Raman instruments cost $50,000 to $100,000, depending on the technology (dispersive or FT-based) and also available sampling accessories. Optical fibers for process installation cost $15 to $30 per foot per channel (consisting of three cables), depending on the packaging options. The fiber optics probe costs $2,000 to 15,000, depending on the application requirements and required ruggedness.
Partial List of Suppliers:	Bruker Optics, Inc., (www.brukeroptics.com) Chromex (www.chromexinc.com) Horiba Group (www.jyhoriba.com) InPhotonics (www.inphotonics.com) Jasco Inc. (www.jascoinc.com) Kaiser Optical Systems, Inc. (www.kosi.com)

© 2003 by Béla Lipták

Process Instruments, Inc. (www.process-instruments-inc.com)
Raman Systems, Inc. (www.ramansystems.com)
Renishaw, plc (www.renishaw.com)
Rosemount Analytical, Inc. (www.processanalytic.com/)
Thermo Nicolet (www.thermo.com/)

INTRODUCTION

Raman analyzers can be considered for applications in which infrared (IR) or near-infrared (NIR) detectors are suited for making the measurement. The cost of a Raman process analyzer typically exceeds that of other analyzers. Therefore, gas chromatography is preferred to Raman spectroscopy except in cases where continuous and fast readings are more important than cost and precision. Raman technology is distinctly advantageous for the analysis of viscous liquids such as polymer melts.

This section describes Raman spectroscopy for process control measurement and analysis. The first part of this section deals with the principles of Raman spectroscopy. Next, the technological developments that transformed Raman spectroscopy from an esoteric laboratory technique into an industrial process analytical tool are presented and the components of the Raman process analyzer are described in detail.

Following this discussion, the benefits of Raman spectroscopy are compared with near-IR and mid-IR absorption spectroscopy methods. Finally, the industrial process applications of Raman analyzer technology and its future directions are discussed.

PRINCIPLES OF RAMAN SPECTROSCOPY

Optical Spectroscopy

In optical spectroscopy, light from a source is allowed to impinge on the sample to be examined. Molecules in the sample respond to the incident light by absorbing, scattering, or changing the energy of photons. Optical spectroscopy is the analysis of change between the incident and return light. Optical spectroscopy can be used to detect, identify, characterize, and quantify chemical components in the sample.

Vibrational spectroscopy, where the light characteristics change as a result of various modes of molecular vibrations, is the most powerful form of optical spectroscopy methods for providing quantitative chemical information. Near-infrared absorption, mid-infrared (IR) absorption, and Raman scattering are three major forms of vibrational spectroscopy methods.

NIR and IR spectroscopy methods will not be discussed here, and the reader is referred to Section 8.27 of this handbook for an in-depth discussion of these analyzers. Although reference to NIR and IR methods is essential when discussing the merits of Raman spectroscopy, the focus of this section is on the use of Raman scattering for chemical analysis and process applications. An in-depth theoretical discussion of Raman spectroscopy can be found in References 1 through 3; a brief description of the principles of Raman spectroscopy is provided here.

Principles of Raman Scattering

A pictorial description of the Raman scattering process is shown in Figure 8.51a. When monochromatic light interacts with molecules, most of the photons are scattered without any change in energy.* This process is called elastic or Rayleigh scattering, and it occurs when the electrons in a molecule oscillate in resonance with the applied electric field of the incident light. However, a small number of photons (1 out of 10^6 to 10^9) are inelastically scattered and undergo a change in energy.

The inelastic scattering process is called *Raman scattering.* The change in photon energy occurs because, during the time the electrons oscillate in resonance with the applied electric field, a molecule may vibrate. A vibrational mode that changes molecular polarizability (dipole moment induced by electric field) results in a change of incident photon energy. The difference in energy between the incident photons and inelastically scattered photons is called *Raman shift.* A plot of the intensity of the inelastically scattered light as a function of the energy change is called *Raman spectrum* (Figure 8.51a).

Figure 8.51b shows a schematic of the Raman and Rayleigh scattering processes. There are two kinds of Raman scattering events. In event (a), incident photons lose energy to the molecule, causing it to go to an excited, vibrational state ($v_0 \rightarrow v_1$). As a result, scattered photons will have less energy (Stokes Raman) compared to the incident photon.

In event (b), the incident photons gain energy from the molecule, because the molecules lose energy by going from a higher to lower vibrational state ($v_1 \rightarrow v_0$). In this case, the Raman scattered photon will have higher energy than the incident photons (anti-Stokes Raman). At room temperature, most molecules are in the vibrational ground state (v_0), so there is a greater probability that incident photons will lose energy to the molecules during the interaction, i.e., Stokes Raman. Generally, Raman spectroscopy refers to Stokes Raman unless specified otherwise. Thus, Raman scattering is observed at lower energy or longer wavelength compared to that of the incident light.

Raman Scattering and Spectral Information

Raman scattering intensity is related to the number of molecules in the sample according to the following equation:

$$I_R = I_0 \cdot \sigma_R \cdot N \cdot (\nu_0 - \nu_R)^4 \qquad \textbf{8.51(1)}$$

* The relationships between energy, frequency, wave number and the wavelength are as follows:
E = hv (h is Planck's constant, and v is frequency in sec^{-1})
E = hcυ (c is the speed of light in cm/sec, and υ is wave number in cm^{-1})
$\upsilon = 1/\lambda$ (λ is wavelength in nm)

© 2003 by Béla Lipták

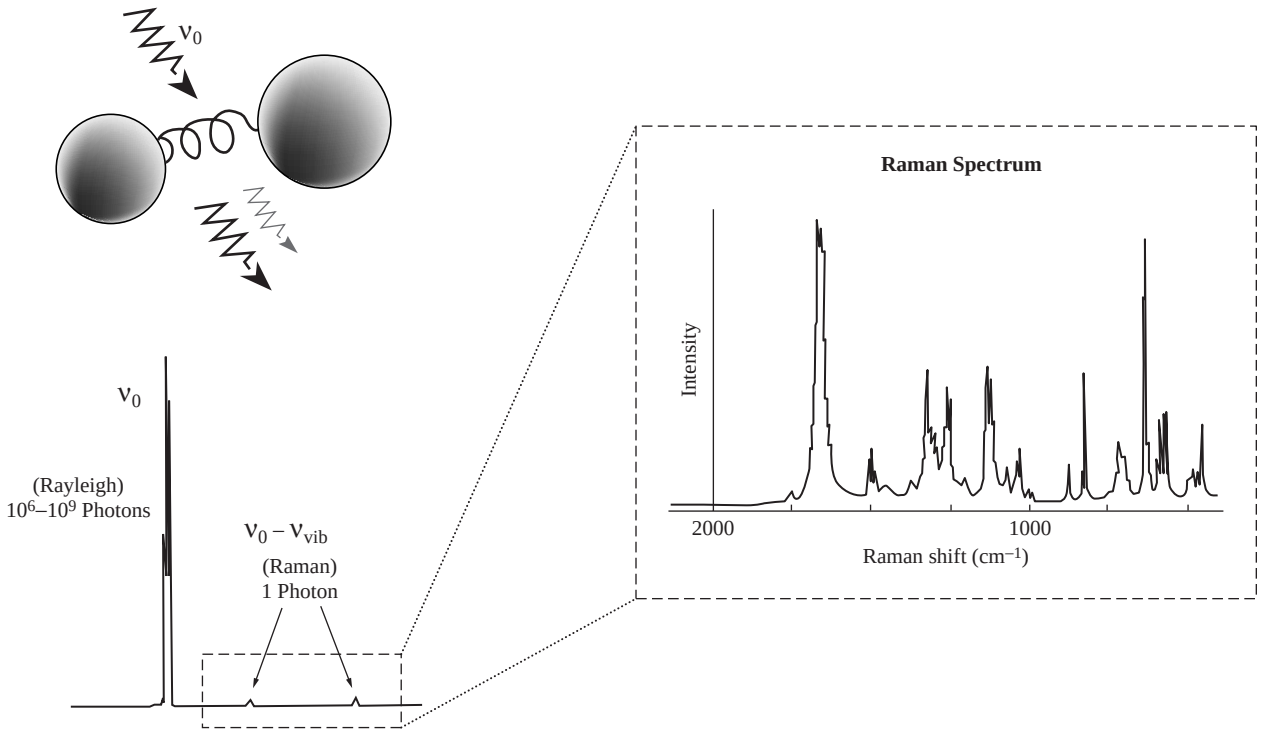

FIG. 8.51a
Pictorial representation of Raman scattering.

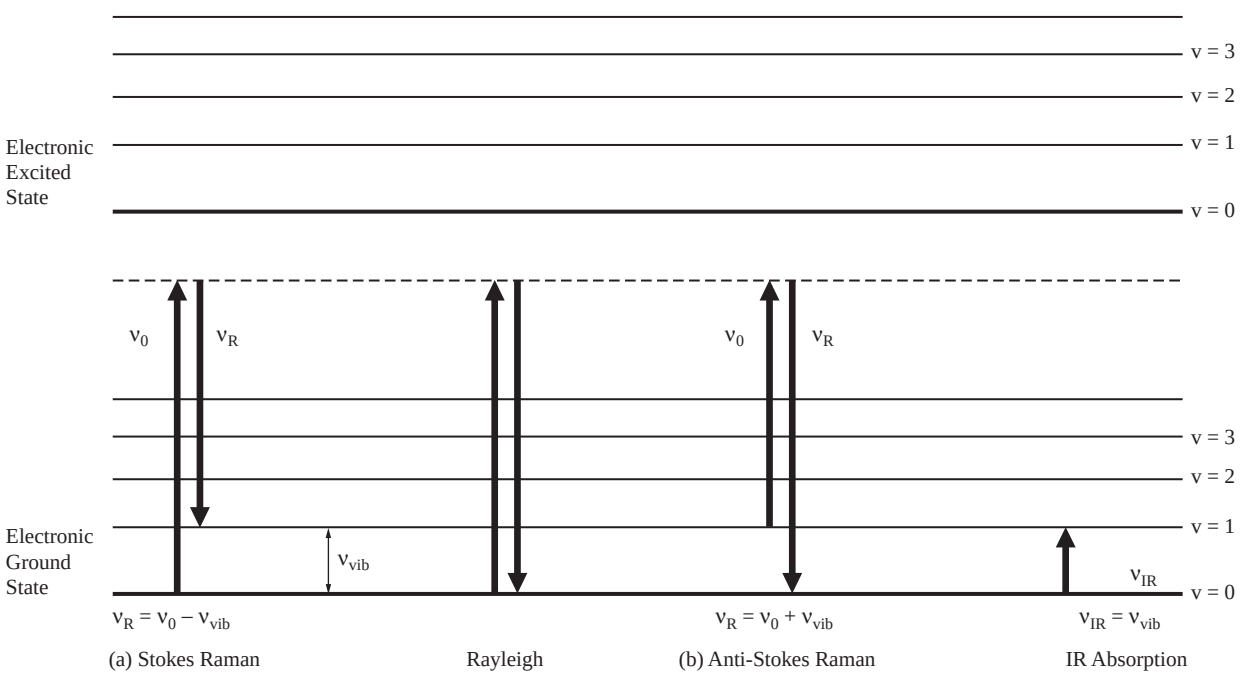

FIG. 8.51b
Schematic of energy level diagram for Raman and Rayleigh scattering processes.

where

I_R = Raman signal intensity
I_0 = incident light intensity
σ_R = Raman scattering cross section that is related to molecular polarizability
N = number of molecules in the sample volume probed by the light beam
ν_0 = frequency of the excitation light
ν_R = Raman scattering frequency

© 2003 by Béla Lipták

This relationship permits the use of Raman for quantitative analysis.

As in mid-IR absorption, Raman scattering also probes vibrations of the molecular bonds. The Raman shift frequency (υ_R, see Figure 8.51b) is equivalent to energy of mid-IR absorption for vibrational modes of a given group in the molecule (e.g., C—H stretch in CH_4 methane). In a classical model of molecular vibration, the Raman shift [expressed in energy, wave number, wavelength, or frequency (see previous footnote)] is related to molecular properties using an analogy of mass attached to a spring (Figure 8.51a) as follows:

$$\Delta\upsilon_{vib} = \frac{1}{2\pi C}\sqrt{\frac{k}{\mu}} \qquad \textbf{8.51(2)}$$

where

$\Delta\nu_{vib}$ = Raman shift or absorption energy in the mid-IR region (expressed in cm^{-1} units)
C = speed of light
k = strength of the bond (or force constant of the spring, in newtons/m)
μ = reduced mass given as $m_1m_2/(m_1 + m_2)$, where m_1 and m_2 are atomic mass attached to the spring or bond

As the relationship shows, the Raman shift is related to the strength of the bond and the atomic masses of the molecule. For instance, for the carbon-carbon vibrations in functional groups with increasing bond strength, C—C, C═C, and C≡C, the Raman shift occurs at increasing frequencies, ~1000 cm^{-1}, ~1650 cm^{-1}, and ~2300 cm^{-1}, respectively.

Although Raman and mid-IR provide similar information, the selection rules for observations are different. Selection rules determine which vibrational modes are observed in the spectrum. Raman scattering arises due to a change in polarizability during vibration, whereas IR absorption occurs due to a change in dipole moment. Thus, for instance, homonuclear diatomic molecules (N_2, O_2, H_2, etc.) show Raman bands but not mid-IR absorption bands, because their only vibrational mode does not change the dipole moment of the molecule.

Table 8.51c lists various molecular functional groups that can be observed and quantitatively analyzed using Raman spectroscopy.

GENERAL INSTRUMENTATION

Raman scattering is inherently weak and is difficult to observe without intense monochromatic excitation and a sensitive detector. Modern Raman spectrometer systems use lasers as excitation sources. Visible laser light (400 to 700 nm)

TABLE 8.51c
Molecular Functional Groups Observable by Raman and Their Raman Shift Positions

Raman Shift (cm^{-1})	*Functional Groups*	*Raman Shift (cm^{-1})*	*Functional Groups*
3400	(O—H, N—H)	1440–1400	N═N (aromatic)
3300	≡C—H	1420–1370	Polyaromatic ring
3100–3000	═C—H	1380–1330	C—H deform, C—(NO_2)
3000–2800	(C—H) stretch	1310–1290	CH_2 twist
2600–2550	(S—H)	1310–1250	Amide II
2260–2220	C≡N	1300–600	C—C (Chain)
2200	S—H	1270–1250	C—H deform
2250–2100	C≡C	1260–1200	Ring breath
2050	C═C═O (aliphatic)	1250–1000	C═S
1970–1900	C═C═C (aliphatic)	1200–800	C—O—C
1830–1700	C═O (Carbonyl, ester)	1100–1050	C—S (aromatic)
1750–1630	C═C (aliphatic)	900–850	O—O
1680–1630	Amide I band	800–650	C—S (aliphatic)
1670–1660	C═N stretch	800–500	C—X (X═Cl, Br, I)
1670–1630	Amide I band	800–400	Si—Cl
1670–1610	C═N stretch	650–200	P—Cl
1650–1590	N—H (amines)	600–350	P—P
1640	Water (weak band)	550–450	Si—O—Si
1630–1540	C═C (aromatics, polyenes)	550–430	S—S
1580–1550	N═N (aliphatic)	450–150	Metal—O
1560–1530	C—NO_2	400–250	C—C (aliphatics)
1480–1400	C—H Bend		

© 2003 by Béla Lipták

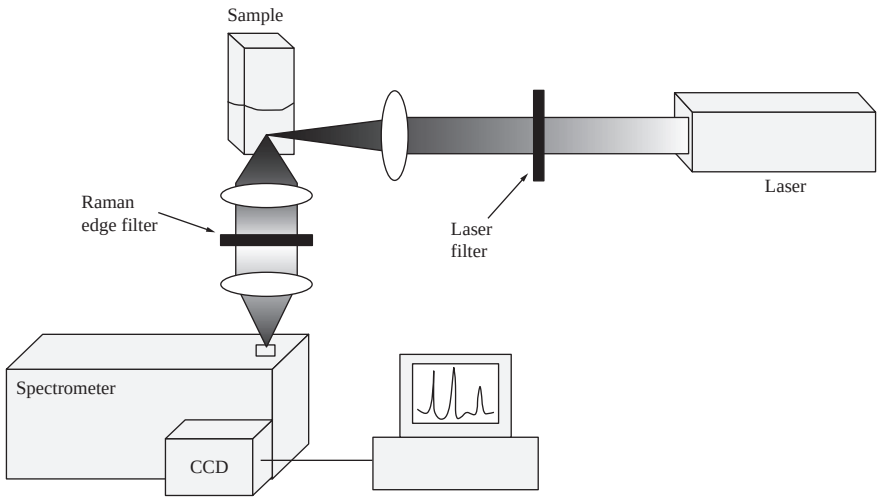

FIG. 8.51d
Schematic of a dispersive Raman instrument.

from an argon ion, helium-neon, or krypton ion laser is commonly used in laboratory Raman instruments. One of the drawbacks of visible laser excitation is fluorescence interference.

Almost all complex samples, especially biological systems, exhibit fluorescence. Because the fluorescence signal is three to five orders of magnitude stronger than the Raman signal, even trace fluorescence from impurities can mask weak Raman signals. For this reason, NIR laser-based Raman instruments have superseded visible laser instruments. Fluorescence decreases rapidly at longer excitation wavelengths, and most materials exhibit little or no fluorescence emission when excited with NIR lasers.

Fourier Transform Raman Instrumentation

Fourier transform (FT) Raman is the first technology to use near-IR excitation to collect fluorescence-free Raman signals.[4] The heart of this system is a wavelength-stabilized Michelson interferometer, one arm of which is scanned in length to produce a time-varying interference signal. The Raman spectrum is computed from the Fourier transform of this signal. FT Raman setup employs continuous-wave Nd:YAG laser ($\lambda = 1.064\ \mu$m) and a cryogenically cooled indium gallium arsenide (InGaAs) detector.

Three advantages of an FT spectrometer are (1) Conne's advantage—excellent wavenumber repeatability, (2) Fellgett's multiplex advantage—information in all wavelengths collected at the same time, and (3) Jacquinot's advantage—increased throughput.

The main disadvantage of FT-based analysis is its lower signal-to-noise ratio (S/N); it is limited by both reduced signal strength at the longer near-IR wavelength or lower frequency (signal strength is proportional to ν_0^4) and the relatively high noise levels associated with InGaAs detectors. Furthermore, for remote spectroscopic applications, optical fibers are used for light delivery and signal collection. In such instances, the small numerical aperture (NA) of fibers (0.22) is not readily matched to a Michelson interferometer, thus losing the throughput advantage of the interferometer.

Dispersive Raman Instrumentation

Technological advances in the past decade have resulted in dispersive Raman instruments that employ imaging spectrographs and charge coupled device (CCD) detectors. A schematic of a dispersive near-IR Raman system is shown in Figure 8.51d.

The NIR laser is filtered to remove unwanted sidebands from the laser and is focused on the sample. The scattering signal is collected by a second lens, filtered by a Raman edge filter to reject intense Rayleigh scattering, and focused onto an imaging spectrograph equipped with a grating. A CCD array detector mounted at the output focal plane of the spectrograph detects the Raman signal. Commercial systems also use optical fibers instead of lenses to deliver and collect light. Various fiber optic sampling arrangements have been reviewed in detail.[5]

The primary gain in S/N of a CCD dispersive system as compared to that of an FT system results from the low noise level of a cooled CCD array detector. However, there are two factors to be optimized in selecting the appropriate near-IR excitation laser. First, in the visible wavelength, a CCD has very high efficiency, but fluorescence strongly interferes with the Raman spectra.

In the near-IR region, although fluorescence interference is reduced or eliminated, but the CCD detector quantum efficiency drops considerably as a result of silicon absorption. In selecting the optimal excitation wavelength, a trade-off must be made between these two factors. For most complex samples, the excitation wavelength range generally falls between 750 nm and 830 nm. Comparative signal-to-noise studies have shown that CCD/dispersive system can be several orders of magnitude more sensitive than FT Raman operation.[4,6]

© 2003 by Béla Lipták

RAMAN PROCESS ANALYZER INSTRUMENTATION

The Raman process analyzer is designed to produce continuous data that are reliable and reproducible for process analysis and control. Some of the key requirements for Raman process analyzers include (1) ruggedness of analyzer, probes, and optical filters, (2) data accuracy and repeatability, (3) long-term stability, (4) operating environment-independent performance, (5) standardized, analyzer-independent data to allow for calibration transfer between analyzers, (6) smart diagnostics for analyzer performance and predictive maintenance, (6) industry-standard communication and outputs for control, (7) availability of outputs, diagnostic parameters, and alarms for operation and maintenance, (8) laser safety for personnel and the process, (9) protection against failure, (10) packaging and certification for field applications, (11) ease of operation and maintenance, (12) multilevel passwords and security features, (13) high uptime (high mean time to failure and low mean time to repair), and (14) low total cost of ownership.

Components of Raman Process Analyzers

Figure 8.51e shows the layout of a typical Raman analyzer that uses fiber optics for process application. In a Raman process system, light is filtered and delivered to the sample via excitation fiber. Raman scattered light is collected by collection fiber(s) in the fiber optic probe, filtered, and sent to the spectrometer via return fiber optical cable(s). The CCD camera detects the signal to provide the Raman spectrum. In a Raman process analyzer, the components and their implementation will be different from those used in laboratory instruments.

Laser Excitation Source To take advantage of low-noise CCD cameras and to minimize fluorescence interference, near-IR diode lasers are used in process instruments. Advances in telecommunications, where near-IR diode lasers are used as a laser pump source, have significantly contributed to the development of NIR diodes.[7]

Available diodes have broad line width, are very compact [as small as 1×2 in. (25×51 mm) with integrated Peltier cooler, thermistor temperature sensor, and photomonitor], offer tens of watts of power and are relatively inexpensive. However, these multimode devices also exhibit line shape instability, a phenomenon known as *mode hopping* (Figure 8.51f).

Raman spectra obtained with a multimode laser exhibit lower resolution resulting from the broad spectra line shape, and they also show instability. In most applications, lower spectral resolution can be circumvented with the use of multivariate analysis for extracting concentration, much as in NIR. The more significant problem is the instability of the Raman spectrum due to laser mode hopping. To compensate for this, two approaches have been employed.

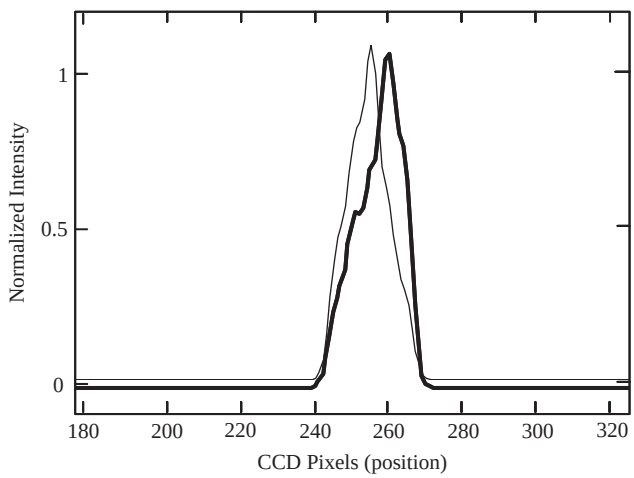

FIG. 8.51f
Instability of multimode diode laser caused by mode hopping, illustrating the need for compensation.

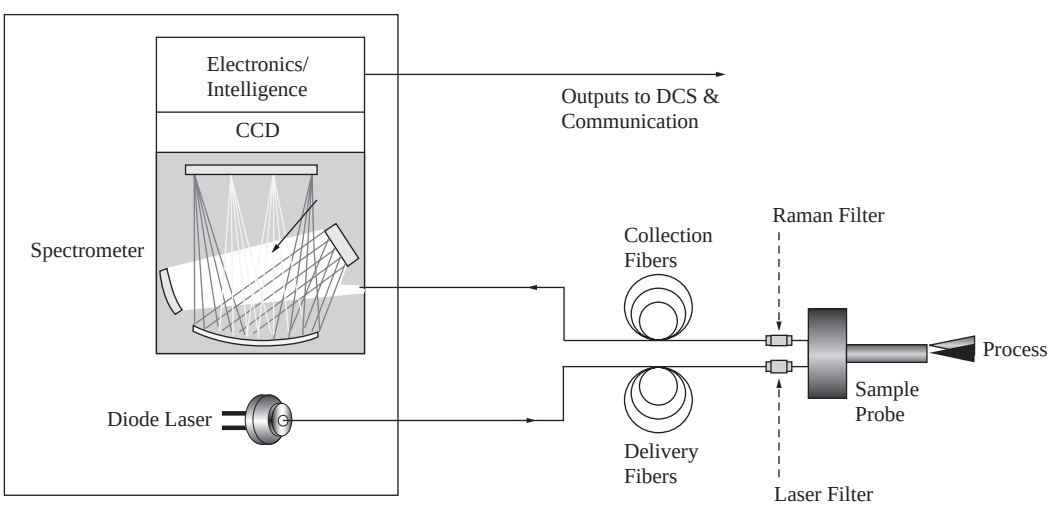

FIG. 8.51e
Schematic of fiber optic Raman analyzer for process measurements.

© 2003 by Béla Lipták

The first approach uses a Raman reference standard. A small portion of the laser beam is split and sent to a reference channel containing a small sample of a chemically stable material, e.g., an industrial diamond. The Raman output of the reference diamond is sent to the same CCD camera. Thus, for every process sample spectrum, there is a reference spectrum of the diamond. A transfer function (convolution function) is calculated to match the spectrum of the reference material to its true spectrum. The calculated transfer function is then applied on the sample spectrum to produce a true sample spectrum that is independent of laser mode hopping.

In the second approach, a small portion of the laser beam is directly monitored for mode hopping, and this information is used to compensate for the laser instability.

A multimode diode can be made into a narrow-line-width, single-mode laser by forcing one of the modes to lase and providing stabilization using a diffraction grating.[8] A single-mode laser has narrow line width, resulting in high-resolution Raman spectra. However, single-mode lasers are inefficient, relatively large in size, and more expensive compared to multimode devices. The trade-off between resolution and total cost of ownership should be considered for each application.

Some analyzers use visible laser excitation (e.g., green) for high-sensitivity applications where the process sample is free of fluorescence emission. The use of the green laser offers high sensitivity due to ν^4 factor [see Equation 8.51(1)] and allows detection of C-H and N-H stretching modes in the Raman shift region, 2800 to 3400 cm^{-1} (see Table 8.51c). Again, the total cost of ownership, fluorescence interference, required sensitivity, and spectral range desired should be taken into consideration in deciding on a visible laser-based Raman analyzer.

Spectrometer A typical spectrograph consists of mirrors and a grating for dispersion. Ruled diffraction grating spectrographs use aluminum-coated optical surfaces and are not very efficient for NIR region. Further improvement in throughput is achieved by using gold-coated optical components. The development of holographic optics offers highly efficient holographic gratings with additional advantages such as fewer optical elements and compact size, and the light beam acceptance angle can be matched with that of the optical fibers for increased system throughput.[4] The critical requirement of all spectrographs is temperature stability. The analyzer must be very well temperature controlled or located in a temperature-controlled environment.

Detector A CCD detector is the primary choice for dispersive instruments because of its extremely low dark current at low temperatures (as low as 0.05 electrons per second at –40°C). Raman process instruments use detectors that are cooled by two- or three-stage Peltier thermoelectric coolers.

Near-IR Raman instruments use back-thinned CCD cameras that have higher quantum efficiency in the near IR range as compared to front-illuminated devices. A CCD camera is a two-dimensional array device and is available in a variety of pixel formats (512 × 256, 512 × 512, 1024 × 512, 1024 × 1024, etc.). The x-axis is the dispersion axis, and the y-axis is the intensity axis. The number of x-axis pixels determines spectral resolution (if applicable) and spectral coverage. The two-dimensional array allows simultaneous measurement of multiple channels by arranging the light inputs vertically along the y-axis. Thus, the pixel format of the y-axis is chosen to accommodate multiple optical inputs into the spectrometer.

Raman instruments with multiple inputs are available for a variety of reasons.

1. Multiple optical fibers from a single stream can be coupled into the spectrometer for increased optical throughput and sensitivity.
2. The dual-fiber optic input beam, one for referencing and one for the process stream, can be used for dual-channel referenced Raman spectroscopy.
3. A split architecture where the top and bottom portions of the CCD measure two different spectral ranges increases spectral resolution and spectral coverage.
4. In one design, up to six channels can be accommodated for simultaneous measurement of two references and four process streams.

Unlike scanning devices with which one wavelength unit is measured at a time, the two-dimensional array format of the CCD, combined with its very high read rate on the order of megahertz, allows simultaneous measurement of all channels in real time. The advantage of simultaneous measurement is that any transient drift in laser power does not affect the spectral line shape but only overall amplitude, which can be compensated for by normalizing the spectrum.

Fiber Optic Light Delivery and Collection Optical fibers are used to deliver light and collect Raman signals remotely. Silica fibers with a core diameter ranging from 50 to 500 μm are used. The larger the core diameter, the less the bending radius (flexibility). Raman spectroscopy uses low-hydroxy fibers to minimize fiber background interference in Raman data and also to minimize light attenuation caused by fiber absorption.

Different fiber optic configurations are employed in Raman spectroscopy (Figure 8.51g), depending on the required sensitivity. These include one excitation and six

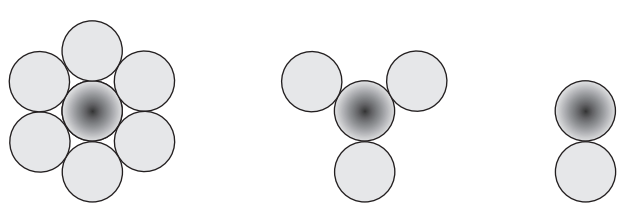

FIG. 8.51g
Various optical fiber geometries for laser excitation (dark circle) and Raman collection (gray circles).

© 2003 by Béla Lipták

surrounding collection fibers (circular geometry), one excitation and three collection fibers (triangle geometry), and one excitation and one collection fiber.

Although possessing lower sensitivity as compared to other geometries, most analyzers nonetheless incorporate one-excitation, one-collection fiber geometry. This configuration is simple to implement, is less expensive, requires no alignment in fiber-to-fiber coupling, and is easy to install in the field. With low-hydroxy fibers, light can be transmitted over hundreds of meters without a significant decrease in throughput. The main issue is that, as the laser traverses through optical fibers, optical fibers generate silica Raman bands and/or a broad fluorescence background.

Proper filtering is therefore needed (see next paragraph). For field installation, optical fibers are protected with PVC or metal jackets. Fibers are terminated with SMA 905, FC, ST connectors. Reproducible fiber-to-fiber coupling needs to be considered in selecting connectors for the fiber optic cables.

Laser and Raman Filters In order to observe inherently weak Raman signals, the laser needs to be monochromatic, i.e., free of any laser side band interference. In addition, the intense Rayleigh scattering should be completely prevented from reaching the detector. Laser and Raman filters, respectively, serve this purpose. Laser filters must be bandpass filters of very high attenuation (10^7 or more) so as to completely eliminate fiber background and Rayleigh scattering. The filter must also have very high transmission (80% or more) at the laser wavelength to pass laser light efficiently.

Raman filters, on the other hand, are long-pass (or notch) filters. Raman filters have very high attenuation at the laser wavelength to prevent laser radiation from entering the collection fiber and the detector. Raman filters also have very high transmission at the Raman frequency region to pass the Raman light efficiently.

Analyzer manufacturers use either dielectric or holographic filters. Holographic filters are more efficient and have sharp cutoff characteristics that allow Raman spectral lines close (~100 cm^{-1} or less) to the laser wavelength to be measured. Dielectric filters that use hard metal oxide coatings are less efficient but exhibit less temperature dependence. Selection of appropriate filter technology depends on the location of the analyzer (open field, shelter, control room), location of the filters (protected or unprotected), required sensitivity, and how close to Rayleigh scattering the Raman bands need to be measured.

Sample Interface Sample interface is critical in all process applications, because analyzer performance and reliability are highly dependent on the sampling system. (For a detailed discussion of the features and capabilities of fiber optic probes, refer to Section 8.23.)

Typically, there is no need for a sample extraction, handling, and conditioning system for Raman analyzers, because an optic probe can be directly interfaced to the process stream. The probe consists of optical fibers for laser excitation and Raman signal collection. There are several excitation fiber and collection fiber geometries for use in Raman spectroscopy.[5] Most common for process application is one-excitation, one-collection fiber geometry, because of its simplicity and ruggedness.

Raman Probes The two types of Raman probes are invasive and noninvasive. The requirements for an invasive or insertion probe are that it should be industrially hardened, have a high degree of chemical/corrosion resistance, and be able to withstand very high process temperatures and pressures. Developments in glass-metal welding and welded metal pressure seals have made available robust, invasive Raman probes that can withstand up to 350°C and 3000 PSIG and operate under highly corrosive conditions. Different types of sleeves are available; stainless steel, titanium, Hastelloy,® and Kynar® can be used in corrosive applications.

Probes are available with the laser and filters either external to the probe body or integrated within the probe body. Figure 8.51h shows invasive probes with different sleeve constructions. An insertion probe may be used in conjunction with retraction mechanism for safely retracting the probe from the process for maintenance. In applications where the process integrity cannot be breached for hazardous or sterility reasons, and where the processes are operating at extreme pressure, temperatures, or corrosive conditions, a noninvasive probe should be considered.

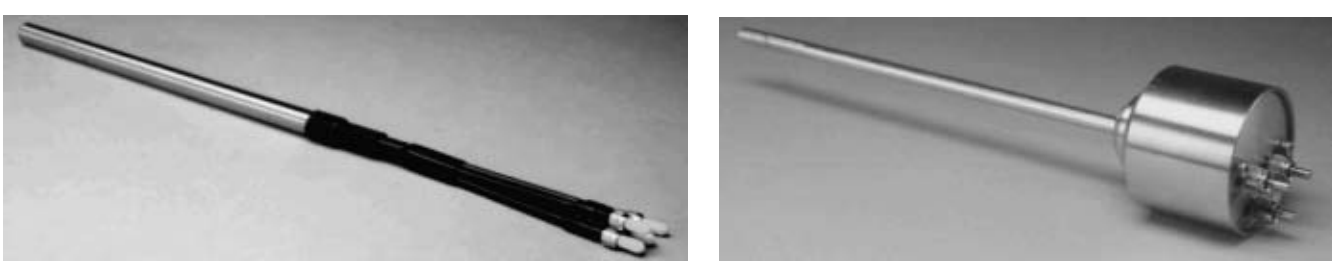

(a) (b)

FIG. 8.51h

Raman process probes. (a) Invasive titanium sleeve probe (courtesy of CIC Photonics, Inc.) and (b) invasive probe with stainless steel construction and gold brazing of fibers to the body (courtesy of Rosemount Analytical, Inc.).

© 2003 by Béla Lipták

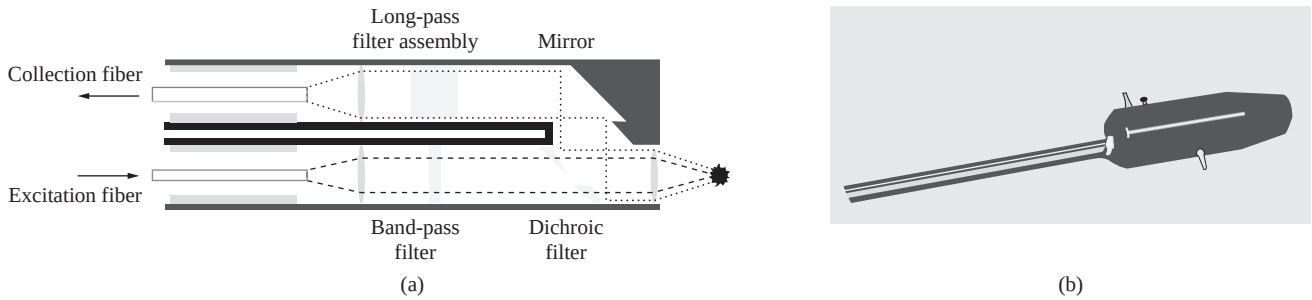

FIG. 8.51i
Focused probe with integrated laser and Raman filters. (a) Schematic of the beam path and (b) process probe for invasive and noninvasive applications. (Courtesy of InPhotonics, Inc.)

Typically, in noninvasive probe implementation, the probe is placed outside the process container, and the laser excitation and Raman collection are done through optically transparent windows such as quartz or sapphire. Figure 8.51i shows one such design, where a lens at the tip focuses the laser beam and also collects the Raman scattering signal through the transparent window. By changing lenses with different focal distances or by using a variable focal length assembly, measurements can be done through 12 mm thick sapphire windows.

Chlorate bleach reactions in the pulp and paper industry and nitration reactions in the chemical processing industry are examples of hazardous and corrosive processes. Cell culture monitoring and fermentation monitoring are examples of sterile processes that would use noninvasive probes.

Data Analysis, Modeling and Calibration

The Raman spectrum must be processed before it can be used. Spectral processing includes noise filtering, smoothing, normalization, reference compensation, fluorescence background removal, and correction for scattering, especially in a heterogeneous media. The Raman spectrum is then related to a concentration of chemical components via calibration. A simple calibration is the intensity or band area ratio method, which is internally normalized.

Polymerization Application For instance, in a polymerization reaction, the monomer concentration would decrease as the polymer concentration increases. Thus, the ratio of bands associated with monomer and polymer molecules can be used to easily estimate the degree of polymerization. In cases where the spectrum of the mixture can be expressed as a linear superposition of the spectra of individual component line shapes and their Raman cross sections, relative concentration of various components can be easily estimated.[9]

Also, where the Raman signal from the component of interest can be isolated, the signal strength can be related to its concentration by measuring Raman spectra of several known standards that span the range of concentration of interest.

Multivariable Predictive Analysis For most applications, however, a simple linear equation [e.g., Equation 8.51(1)] cannot be used because of noise, variability in measurement, spectral overlap of various bands, internal absorption, diffuse scattering, etc. For such applications, multivariate predictive statistical analysis [such as multiple linear regression (MLR), partial least squares regression (PLS), principal components regression (PCR), etc.] are used to reduce highly correlated spectral information into a few orthogonal (uncorrelated) spectral vectors.

The scaling factors of the spectral vectors are then related to concentration via multidimensional curve fitting or regression analysis.[10] Nonlinear analysis using an artificial neural network is also increasingly being used in Raman spectroscopy.[10] In the multivariate analysis, the analyzer is trained first, using a set of standard samples of known concentration.

Figure 8.51j illustrates such a calibration scheme. Samples are collected from the process (sometimes spiked with components to get the span range desired), and their Raman spectra are obtained. The same samples are then analyzed via standard laboratory chemical analysis. Spectral information and known chemical composition from the laboratory are related using a multivariate model. The model validity is then checked using unknown samples to get an estimate of prediction error. Naturally, the calibration accuracy cannot exceed that of the laboratory analysis used to build the model, although repeatability is usually better.

Calibration Model A calibration scheme built outside of the process environment should be considered preliminary only and must be fine-tuned when the analyzer is operating in an actual process. An effective way to fine-tune an existing calibration scheme, or to build one from scratch, is by periodically collecting samples for laboratory analysis while the analyzer is operational.

Correlating Raman spectral response in actual process conditions with laboratory analysis is the best way to build accurate, process-specific calibration schemes, whether based on peak integration or statistical modeling. This, however, takes time and patience to do well. Also, a good calibration model must include the extremes of the process range.

© 2003 by Béla Lipták

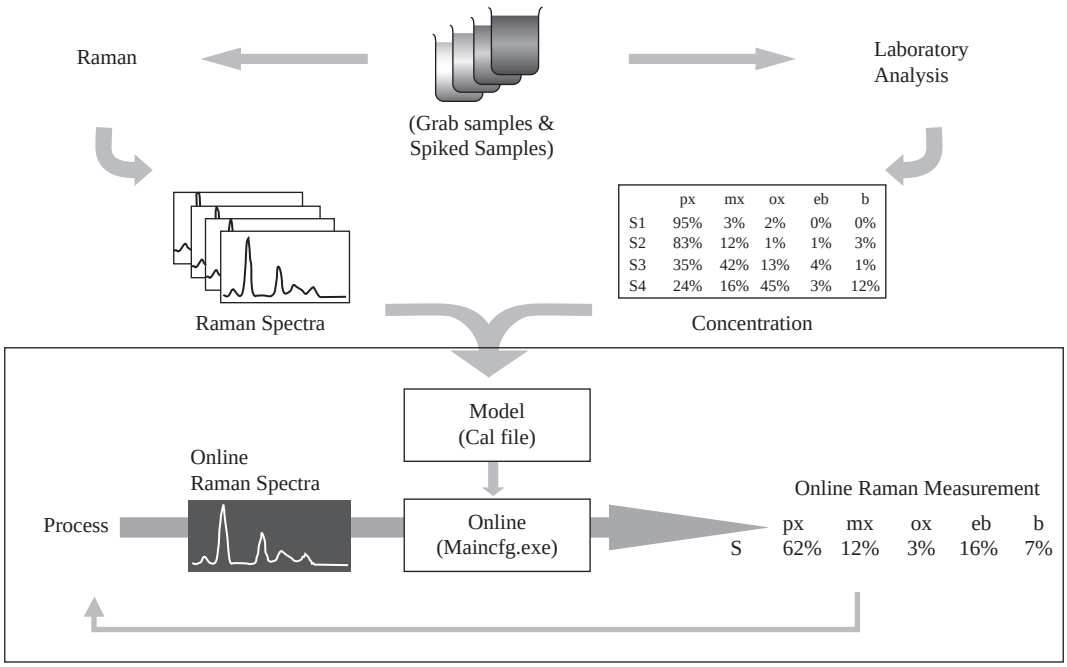

	px	mx	ox	eb	b
S1	95%	3%	2%	0%	0%
S2	83%	12%	1%	1%	3%
S3	35%	42%	13%	4%	1%
S4	24%	16%	45%	3%	12%

	px	mx	ox	eb	b
S	62%	12%	3%	16%	7%

FIG. 8.51j
Analyzer calibration scheme using laboratory analysis as the standard. Calibration model is verified for accuracy and robustness and downloaded to the analyzer for online prediction.

For a stable manufacturing process, it can be frustrating to wait for the process to swing from one extreme to another and, perhaps more significantly, to be able to collect lab samples precisely when the process conditions are at the extremes.

It is highly desirable (if possible) to install an automatic lab sampler that can be triggered by the analyzer to collect a sample for lab analysis when the analyzer detects a value in the extreme of its detection range or detects unusual process conditions that are not built into the preliminary model. Such a trigger can be based on predicted data limits or on modeling parameters such as spectral residuals (a measure of how well the model-calculated spectrum matches with the measured spectrum) and/or Mahalanobis distances (a measure of how close the measured spectrum is from the mean of all the data used in the calibration, measured in standard deviation). Clearly, whenever a sample is collected for laboratory analysis, the concurrent Raman spectrum should be saved for diagnostics and for inclusion in future calibration updates.

When the analyzer is fully operational with a satisfactory calibration scheme, it is good practice to continue to routinely check its calibration status. Again, this can be done best with collected samples and laboratory analysis. Use of an automated sampler is preferred to avoid human errors in sample collection. The calibration check frequency can be determined based on process stability, calibration scheme stability, and failure rate. Clearly, access to a well equipped and efficient laboratory is essential for building and maintaining good calibration schemes for Raman analyzers.

Calibration Transfer Generally, a calibration model is valid as long as the analyzer components are not modified. Only a few available analyzers are capable of calibration transfer, after major analyzer maintenance, between two streams on the same analyzer or between two different analyzers made by the same vendor.

Two major approaches to calibration transfer are (1) multivariate standardization, where the spectral domain of one analyzer is mapped onto that of the other analyzer by modeling spectral differences and correcting for those differences, and (2) analyzer standardization, where all analyzers are made to yield identical spectra from a given sample using standards.

Raman analyzer standardization itself is a multistep process.[11] First, laser instability is compensated using, e.g., diamond as Raman reference. Second, the CCD pixel in the x-axis is converted to Raman shift frequency by calibrating it with known emission lines of argon, neon, or one of the recent ASTM standards (sulfur, cyclohexane, polystyrene, etc.) and with a known Raman line of diamond. Third, intensity response of the analyzer is corrected over the entire Raman shift range using a white light source or fluorescence color glasses.[12]

Properly done analyzer standardization ensures spectral reproducibility and facilitates calibration transfer. Calibration transfer reduces redundancy by eliminating the need to develop an entirely new calibration model where one already exists for a similar analyzer and process. Calibration transfer saves tremendous amounts of time and effort in developing a new calibration model for each occasion when analyzer maintenance is performed or a new channel or a new analyzer is installed for the same process application.

© 2003 by Béla Lipták

Smart Diagnostics and Analyzer Maintenance

An analyzer that has good diagnostic tools allows for safe operation and reduces analyzer downtime. Two areas of diagnostics are calibration model performance and monitoring the mechanical/electrical health of the analyzer.

For multivariate calibration models, spectral residuals and Mahalanobis distance are indicative of the spectral quality and data reliability. Spectral shape changes can provide a variety of diagnostic information such as process change, insufficient process flow, laser performance, probe fouling, etc.

Analyzer health parameters that should be automated include laser life (based on output power/current), fan life (if present), laser current, laser operating temperature, analyzer internal temperature, CCD operating temperature, and loss of purge air. Availability of these parameters to DCS and asset management systems can automatically trigger analyzer maintenance and repair. A Raman analyzer maintenance scheme should include scheduled preventive maintenance to replace analyzer parts that have known average operational life and rigorous data quality monitoring protocols that can identify problems.

Laser Safety

Raman analyzers use Class IIIB to Class IV lasers. Personnel laser safety is of paramount importance in process implementation. Raman analyzers are available with safety features that warn of laser status and can initiate automatic shutdown. In process applications, the analyzer must be capable of shutting off the laser automatically or reducing the energy to nonhazardous level when internal analyzer diagnostics indicate a potential disruption of the laser loop or when the possibility of personnel exposure exists.

In one scheme, a photodiode in the analyzer continuously monitors the Rayleigh scattering light from the process picked up by a dedicated optical fiber in the probe. When the probe is withdrawn or the laser cable is broken, the absence of Rayleigh scattering immediately triggers safe-mode operation. When the fault condition is cleared, the laser automatically returns to normal mode of operation.

Another consideration is the possibility of the laser inducing hot spots in the process line or the sampling cell. Hot spots are an important safety consideration if the process can potentially contain solid particulates or explosive gas mixtures that absorb at the laser frequency. The possibility then exists that particulates or gas mixtures may be heated to high temperatures by the laser and become an explosion hazard in the presence of hydrocarbons.

Although the relative mass of process flow provides a sufficiently large heat sink to eliminate the risk of explosion, caution is prudent if the nature of the process stream warrants it. It is generally best to do a thorough safety review before installing a Raman analyzer and to develop safety guidelines for each installation.

Outputs and Communication

Raman analyzers provide industry standard communication protocols. Generally, a Modbus or Ethernet protocol is preferred over analog (4 to 20 mA) connection, because a large amount of information can be transmitted and monitored remotely, including a number of safety and instrument health factors. Ethernet capability also allows for remote access of the analyzer for technical experts to diagnose and rectify problems both within the plant and from the vendor site.

Packaging

Because Raman analyzer technology is still relatively new compared to, e.g., NIR and GC technologies, standards for analyzer packaging are still evolving. Since Raman analyzers are compatible with fiber optics for remote analysis, some vendors offer benchtop analyzers that can be located in a control room. However, if the analyzer is located very far from the process stream, then the cost of packaged fiber optics can be significant, especially if multifiber geometry is used.

A few Raman analyzers are available with NEMA12 and NEMA 4X ratings. Z-purged analyzers for hazardous applications are also available.

INSTALLATION AND MAINTENANCE

How a Raman process analyzer is installed and calibrated to a large extent defines its future maintenance requirements. While it is true that there is a correlation between installation and future maintenance for any process analyzer, this is particularly true for Raman analyzers because of the range of installation options.

Whether one chooses to install a complicated sampling system, using an invasive or noninvasive probe, has significant impact on future maintenance needs of a Raman analyzer. Other factors, such as whether the analyzer hardware is located in a hazardous or nonhazardous area and whether the analyzer is housed in an analyzer shelter or in a free-standing purged cabinet, also affect the analyzer's maintenance needs.

Beyond the specific maintenance requirements arising from how the analyzer was installed, the other maintenance requirements for the Raman analyzer tend to be minimal and pertain only to replacing consumable items such as filter, laser, and so forth on a scheduled basis or when they break down.

Probe Designs

The most cost-effective way to install and operate a Raman analyzer is by using an invasive or noninvasive probe. The use of fiber optic probes not only lowers the initial installation project costs, it requires less maintenance over the analyzer lifetime. Generally, a sampling system requires more maintenance than the analyzer itself. By eliminating the sampling system, a major need for continuous maintenance of the analyzer is also eliminated.

© 2003 by Béla Lipták

TABLE 8.51k
Advantages and Disadvantages of Mid-IR, Near-IR, and Raman Methods

	NIR Absorption	*Mid-IR Absorption*	*Raman Scattering*
Selection rule	Change in dipole moment	Change in dipole moment	Change in polarizability
Spectral band profile	Overtone/combination bands, broad (nonspecific)	Fundamental band, narrow (high specificity)	Fundamental bands, narrow (high specificity)
Sensitivity	Moderate (ppm, low percentage)	Very high (ppb, ppm)	Low (low percentage, ppm in favorable cases)
Qualitative identification	Difficult	Yes. Extensive spectral library available	Yes. Comprehensive library not available
Sample	Transparent, bubble and particulate-free liquids Powder samples require diffuse reflectance probe	Transparent liquid, thin solid pellets and ideal for gases. Special ATR probes needed	Same probe is used for all samples; liquids, slurries, emulsions, powders, solids, samples with particulates and bubbles
Signal-to-concentration relationship	Logarithmic	Logarithmic	Linear
Quantitative analysis	Mathematical/statistical modeling	Simple arithmetic possible	Simple arithmetic possible
Transfer of calibrations	Difficult	Difficult	Relatively easy
Sample handling	Yes	Yes	No, noninvasive or *in situ*
Water interference	Good sensitivity to and interference by water	Very high sensitivity to and strong interference by water	No or minimal water interference
Temperature dependence	Sensitive to process temperature variation	Sensitive to process temperature	Wide temperature variation tolerated
Sampling probe	Double sided, single sided when used with reflectance	Double sided or special ATR probes	Single ended
Probe fouling	More likely	More likely	Less likely or not likely with noninvasive
Remote via fiber optics	Long fibers, low hydroxy silica fibers	Short fibers, expensive chalcogenide fibers	Long fibers, low hydroxy silica fibers.
Wetted optical window	Inert (sapphire, silica, quartz)	Fragile (ZnSe, CaF2, KBr)	Inert (sapphire, silica, quartz)

When using a fiber optic probe, the other analyzer hardware (e.g., electronics, detector, laser, computer) can be located in a nonhazardous area by using fiber optic cable to connect the probe. Such an installation scheme eliminates the need for an explosion-proof purged cabinet or an expensive customized analyzer shelter house. Analyzer installation project costs are always a significant factor for a manufacturing site.

All Raman analyzer installations should include an easily accessible sampling point to collect process samples for laboratory analysis. Laboratory analysis is generally required for verifying and updating analyzer calibration. A good practice is to have a sampling feature that allows automatic sampling for laboratory analysis when the analyzer indicates unusual process conditions.

ADVANTAGES AND DISADVANTAGES

A decision to use a Raman analyzer depends on the availability and practicality of alternative analyzer technologies. For example, it is clearly not desirable to employ a Raman analyzer where a gas chromatograph (GC) can perform the same analysis. This is because a GC is more sensitive, more familiar to the average user, and more widely accepted. Therefore, unless a good case can be made based on speed of analysis or low-maintenance requirements of the Raman analyzer, a GC would be preferred.

Generally, a Raman analyzer works where NIR, mid-IR analyzers are applicable. The Raman analyzer, however, combines the best aspects of NIR and IR absorption spectroscopy methods with some of its unique advantages. Table 8.51k lists the advantages and disadvantages of Raman spectroscopy compared to mid-IR and near-IR absorption spectroscopy.

Advantages

Like mid-IR, Raman bands represent fundamental modes of vibration. Bands are narrow, are molecule specific, and provide quantitative chemical analysis. Like NIR absorption, Raman spectroscopy permits the use of optical fibers for remote analysis. Additionally, the following unique advantages of Raman spectroscopy can be noted:

1. It involves minimal or no water interference, an important feature because there is an increasing trend to

© 2003 by Béla Lipták

move away from organic-based to water-based processes due to environmental considerations.
2. The technology is equally amenable to a variety of samples ranging from gases, liquids, slurries, emulsions, powders, and solids to samples with particulates and bubbles. This enables Raman use in heterogeneous systems such as catalytic process, emulsion polymerization, fermentation monitoring, and cell culture monitoring.
3. Noninvasive probes can be used and are a key feature in many applications where the process must not be breached.

Limitations

The limitations of Raman spectroscopy are its low sensitivity as compared to IR absorption and fluorescence interference from analytes or impurities in the sample. By optimizing sample and collection geometry, sensitivity can be improved, and, by utilizing near-IR radiation as the excitation source, fluorescence can be minimized.

APPLICATIONS

Raman analyzer technology can be applicable for chemical composition analysis in a range of manufacturing industries (e.g., specialty chemicals, petrochemicals, petroleum refining, pharmaceutical, agriculture, and pulp and paper). Raman spectroscopy is a developing technology, and a good amount of research and planning is necessary before deciding on employing Raman technology for a process analyzer. In this regard, it is best for industrial technical experts and analyzer technology providers to work together to develop new applications for Raman analyzers.

Polymer Industry

One application area in which Raman technology is distinctly advantageous is for the analysis of viscous liquids, e.g., polymer melts. Use of a noninvasive probe precludes the necessity of building a sample-handling system. Sampling system designs for handling solids or highly viscous liquids tend to be very expansive and costly, and they have lower reliability than those for free-flowing liquids and vapors.

For polymers, and, in general, for macromolecules, it is typically not the chemical composition but the relationship of the chemical composition to the physical properties of bulk density, viscosity, etc. that is more valuable from a process viewpoint. Raman analysis of the chemical signature of the process stream generally can be correlated to the physical properties using multivariate statistical models. This is one area where the speed, stability, and reliability of Raman analysis offer an attractive means for real-time process control.

The range of applications in which Raman analyzer technology can be employed to provide valuable real-time process information is extensive. A summary of typical Raman applications is provided in Table 8.51l.

TABLE 8.51l
Typical Process Applications for Raman Spectroscopy

Industry	*Process Applications*
Chemical processing	Endpoint determination
	Reaction monitoring
	Hydrocarbon analysis
	Emulsion polymerization
	Copolymer reactions
	Heterogeneous catalytic reactions
	Nitration reactions
	Esterification reactions
	Batch and continuous distillations
	Chemical reactor safety and efficiency monitoring
	Polymer crystallinity
	Inorganic analysis
Petrochemical	Monitoring xylene separation process
	Para xylene purity analysis
	Styrene monomer/polymer reaction
	Endpoint determination
	Reaction monitoring
Pharmaceutical	Fermentation
	Cell culture monitoring
	Bromination reaction
	Raw material verification and screening
	Intermediate analysis
Pulp and Paper	Pulp bleaching
	Chlorine dioxide production
Food and Beverage	Modified starch
	Hydrogenation of oils and fats
	Sugars
	Endpoint determination
	Fermentation

CONCLUSION

The cost of a Raman process analyzer typically exceeds that of other analyzers used in the process industry.

The CCD camera and lasers are the most expensive components of the Raman analyzer. Indeed, to reduce cost on a per-process-stream basis, Raman analyzers often include multichannel capability. Up to four process streams can be analyzed with a single CCD camera by splitting the lasers. Advances in CCD and laser technologies continue to lower the cost of these components, and that will help to reduce overall analyzer cost.

Raman calibration transfer is an important technical area that needs to be improved. Currently, there is no traceability of standards used in x- and y-axis calibration of Raman spectrum. Progress in this direction is being made as ASTM has adapted eight standards for x-axis calibration of Raman spectrum.

© 2003 by Béla Lipták

The availability of inexpensive, rugged process probes that can work reliably within a high-pressure, high-temperature, and corrosive process environment will enable the Raman analyzers to be used in a wider range of process applications.

There is a need to improve the sensitivity of the technique. Efficient light collection by probes and effective coupling of the Raman signal to the spectrograph, among other things, would enhance Raman sensitivity. Multipass sample cell design should increase Raman sensitivity, especially for gases. Experimental optical probe designs have already been demonstrated for gas sampling using Raman analyzers.

Another inherent problem with Raman spectroscopy is fluorescence interference. As described earlier, the choice of CCDs as low-noise detectors does not allow excitation wavelengths above 850 nm because of the lack of sensitivity in the corresponding Raman region. For complete avoidance of fluorescence, excitation wavelengths above 1000 nm are needed. A number of applications will become germane for Raman analysis by exciting and collecting light beyond 1000 nm and using new generation of CCD cameras.

Continuing efforts to improve detection limits, fluorescence elimination, traceability of calibration standards, calibration capability, mechanical reliability, and lower cost, coupled with its inherent technical advantages, portends a bright future for Raman technology for on-line process analysis.

References

1. Long, D. A., *The Raman Effect: A Unified Treatment of the Theory of Raman Scattering by Molecules,* John Wiley & Sons, New York, 2002.
2. Herman, I. P., Raman scattering, *Encyclopedia App. Phys.,* 15, 587–612, 1996.
3. Campbell, I. D. and Dwek, R. A., *Biological Spectroscopy,* Benjamin Cummings, San Francisco, CA, 1984.
4. Chase, B., A new generation of Raman Instrumentation, *Appl. Spectrosc.,* 48 (7), 14A-19A, 1994, and references cited therein.
5. Lewis, I. R. and Griffiths, P. R., Raman Spectrometry with Fiber Optic Sampling, *Appl. Spectrosc.,* 50 (10), 12A-30A, 1996.
6. McCreery, R. L., Modern techniques in Raman spectroscopy, in *Instrumentation for Dispersive Raman Spectroscopy,* Laserna, J. J., Ed., John Wiley & Sons, New York, 1996, 41–72.
7. Angel, S. M., Carrabba, M., and Cooney, T. F., The utilization of diode lasers for Raman spectroscopy, *Spectrochimica. Acta,* 1995.
8. Pan, M.-W., Benner, R. E., Johnson, C. W., and Smith, L. M., Near-IR lasers rejuvenate Raman spectroscopy, *Optoelectr. World,* S5-S10, 2000, and references cited therein.
9. Manoharan, R., Wang, T., and Feld, M. S., Histochemical analysis of biological tissues using Raman spectroscopy, *Spectrochimica Acta,* A, 52, 215–249, 1996.
10. Martens, H. and Naes, T., *Multivariate Calibration,* John Wiley & Sons, New York, 1992.
11. Shaheen, M. and Manoharan, R., Raman process analyzer calibration transfer through analyzer standardization, *SPIE Proc. 3859,* 24–28, 1999.
12. McCreery, R. L., Photometric standards for Raman spectroscopy, in *Handbook of Vibrational Spectroscopy,* Griffiths, P. R. and Chalmers, J. M., Eds., John Wiley & Sons, New York, 2002.

Bibliography

Lewis, I. R. and Edwards, G. M., Eds., *Handbook of Raman Spectroscopy: From the Research Laboratory to the Process Line,* Marcel Dekker, New York, 2001.

Lin-Vien, D., Colthup, N., and Fateley, W. G., *Handbook of Infrared and Raman Characteristic Frequencies of Organic Molecules,* Academic Press, New York, 1991.

McCreery, R. L., *Raman Spectroscopy for Chemical Analysis"* Wiley-Interscience, New York, 2001.

Nyquist, R. A., Putzig, C. L., and Leugers, M. A., *Handbook of Infrared and Raman Spectra of Inorganic Compounds and Organic Salts,* Academic Press, 1997.

Pelletier, M., Ed., *Analytical Applications of Raman Spectroscopy,* Blackwell Science, Boston, MA, 1999.

Wise, B. M. and Kowalski, B. R., Process chemometrics, in *Process Analytical Chemistry,* McLennan, F. and Kowalski, B. R., Eds., Chapman & Hall, Boca Raton, FL, 1995.

© 2003 by Béla Lipták

8.52 Refractometers

J. E. BROWN (1969, 1982) **B. G. LIPTÁK** (1995, 2003)

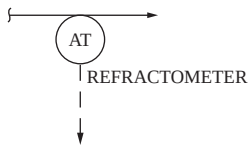

Flow Sheet Symbol

Applications:	Liquids and slurries. Measures the concentrations of dissolved solids or water-soluble liquids.
Materials of Construction:	Stainless steel and glass are standard, with Teflon® gaskets
Operating Pressure:	Up to 1000 PSIG (70 barg)
Operating Temperature:	Up to 2500°F (1371°C)
Recommended Flow Velocity:	For in-line units in excess of 5 fps (1.5 m/s)
Ranges:	Spans of industrial in-line units typically range from 1.25 to 1.65 RI refractive index (RI) units or 0 to 100 Brix(1.333 to 1.54 ORI). Some typical span requirements for a variety of applications are 1.00 to 1.30 (battery acid), 1.333 to 1.360 (urine), 1.333 to 1.520, 1.435 to 1.520, 1.300 to 1.700. Other typical ranges include: in percent salinity, 0 to 10% and 0 to 28%; in % Brix units, 0 to 10%, 0 to 20%, 0 to 32%, 28 to 62%, 58 to 90%, and 0 to 90%; in freezing point of coolants, –60 to 32°F (–51°C to 0°C); in window-washer-fluid concentration, 0 to 100%.
Speed of Response:	3 to 30 sec
Drift:	From 0.5% per month to 1% per 24 hr
Inaccuracy:	The inaccuracy of a good industrial in-line unit, having a span of 0.08 RI, is about 0.0002 RI or 0.25%. The least accurate units are 5% of span. For hand-held laboratory units in % Brix units, for a range of 0 to 95%, the error is 0.1% (0.05% in high-precision refractometers). The corresponding errors in RI units are 0.0002 and 0.0001, respectively.
Costs:	Portable, hand-held, battery-operated refractometers cost from $200 to $600; specialized, digital, hand-held units for battery acid, antifreeze, and window washer applications cost from $800 to $1500; high-precision benchtop laboratory units cost from $2500 to $4500; industrial in-line transmitters cost from $5000 to $10,000; in-line sensors in sizes up to 3 in. (75 mm) cost $8000 and 4 in. (100 mm) cost $10,000; probe sensors cost $8000; beverage analysis system with ±0.02 Brix inaccuracy, $25,000.
Partial List of Suppliers:	APT Instruments (www.aptinstruments.com) Bellingham+Stanley (www.bs-rfm.cpm) Camlab Ltd. (www.camlab.co.uk) Cole-Parmer Instrument Co. (www.coleparmer.com) Electron Machine Corp. (www.e-m-c.com) Extech Instrument Corp. (www.extech.com) Hanna Instrument Inc. (www.hannainst.com) Horiba (www.global.horiba.com) Illinois Instruments (www.illinoisinstruments.com)

© 2003 by Béla Lipták

Kernchen (www.kernchen.de)
K-Patents Inc. (www.kpatents.com)
Kruess Optronic (www.kruess-optronic.de)
Kyoto Electronics Mfg. (www.kyoto-kem.com)
Leica Microsystems Inc. (www.leica-ead.com)
Mettler-Toledo Ltd. (www.mt.com)
Misco (www.misco.com/refractpmeter)
MSA Instrument Div. (www.msanet.com)
NovaChem BV (www.novachembv.com)
NSG Precision Cells (www.nsgpci.com)
PDR-Chiral Inc. (www.pdr-chiral.com)
Rudoplh Research (www.rudolphresearch.com)
Schmidt & Haensch (www.schmidt-haensch.de)
Topac Inc. (www.topac.com/)

INTRODUCTION

A pencil standing in water appears to be broken at the water line. If sugar is added to the water, the pencil will appear to bend even more. This is because light travels slower in water than through air, and even slower when materials are dissolved in water.

RI and Brix Units

The index of refraction, or refractive index (RI), is the ratio between the speed of light in vacuum and the speed of light in the substance of interest. RI therefore is unity when the light travels in vacuum at a speed of 0.98 billion fps or 186,300 mi/s (0.3 billion m/s). The RI of air is 1.0003, and the RI of most gases, liquids, and solids is between 1 and 2. See Table 8.52a for the refractive index values of a variety of substances.

Some industries use their own units rather than the index of refraction. Two examples are the sugar and citrus juice industries. They prefer to use the % Brix scale, which refers to the weight-percent of sugar concentration, corresponding to the number of grams of sugar contained in 100 g of solution. Figure 8.52b provides the conversion between RI and the % Brix units, and Table 8.52c gives the typical % Brix readings on a number of food items and the errors with which refractometers can measure them.

TABLE 8.52a
Refractive Index Table [all data based on 68°F (20°C)]

Acetic acid	1.3718	Formic acid	1.3714
Acetone	1.3588	Glycerol	1.4729
Acrylic acid	1.4224	Glycol	1.4318
Amyl acetate	1.4012	Heptane	1.3876
Benzene	1.5011	Hexane	1.3749
Butyl acetate	1.3951	Hexanol	1.4135
Butyl alcohol	1.3993	Hydrazine	1.470
Butylene	1.3962	Hydrogen chloride	1.256
Carbon disulfide	1.6295	Lead tetraethyl	1.5198
Carbon tetrachloride	1.4631	Menthol	1.458
Chlorobenzene	1.5248	Methyl alcohol	1.3288
Chloroform	1.4464	Methyl ethyl ketone	1.3807
Cycloheptane	1.4440	Nitric acid	1.397
Cyclohexane	1.4262	Nonane	1.4055
Cyclohexanone	1.4503	Octane	1.3975
Cyclopentane	1.4065	Pentane	1.3575
Decane	1.41203	Perchloroethylene	1.5053
Di-ethyl benzene	1.4955	Phenol	1.5425
Di-methyl benzene	1.4972	Propanol(n)	1.3851
Di-ethyl ether	1.3497	Pronanol(iso)	1.3776
Ethyl acetate	1.3722	Styrene	1.5434
Ethyl alcohol	1.3624	Toluene	1.4969
Ethylbenzene	1.4952	Water	1.3330

THEORY OF OPERATION

A refractometer measures the refractive index (RI), which is the ratio of the velocity of light in a vacuum to its velocity in the material of interest. Refraction of light (angularity change) occurs at the interface of two different media unless the incidence of light is perpendicular.

$$\text{RI} = \text{N}' = \frac{\text{V (vacuum)}}{\text{V (material)}} \qquad \textbf{8.52(1)}$$

Snell's law expresses the relationship between the angle of incidence and angle of refraction when light is passed through the interface of two different materials (Figure 8.52d) as

$$\text{n}' = (\sin\alpha / \sin\beta) \qquad \textbf{8.52(2)}$$

The refractive index of a material is usually expressed in terms of air as a standard.

© 2003 by Béla Lipták

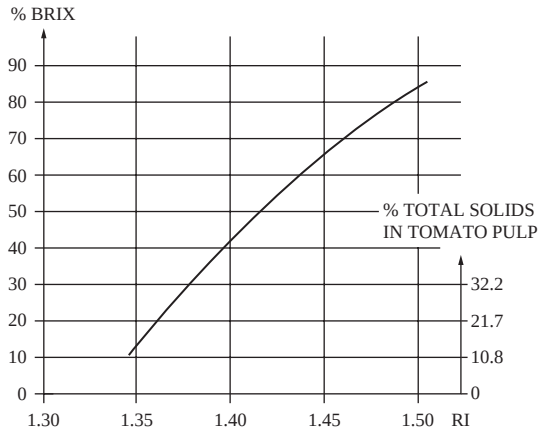

FIG. 8.52b
Refractive index correlations in food industries.

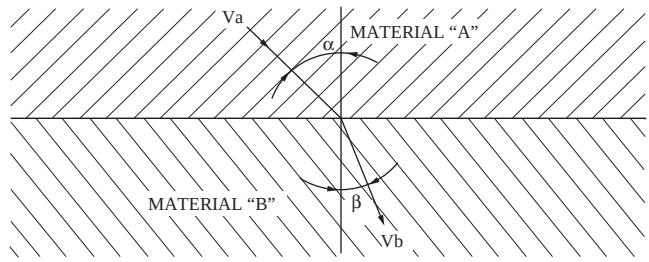

$$n' = \frac{\sin \alpha}{\sin \beta}$$

α = ANGLE OF INCIDENCE
β = ANGLE OF REFRACTION
Va = LIGHT VELOCITY IN MATERIAL "A"
Vb = LIGHT VELOCITY IN MATERIAL "B"
n′ = REFRACTIVE INDEX OF MATERIAL "A" TO MATERIAL "B".

FIG. 8.52d
Illustrations of refraction terms.

TABLE 8.52c
The % Brix Values of Different Food Industry Products and the Errors within Which Refractometers Can Read These Values

Food Industry Products	*Range of Typical % Brix Values*	*Inaccuracy (%)*
Juices:Concentrated orange	12–72	0.25
Concentrated lemon	12–72	0.25
Concentrated apple	12–72	0.25
Concentrated grape	12–72	0.25
Single-strength juices	0–25	0.1
Strawberry jam	36–82	0.25
Grape preserves	12–72	0.25
Apple sauce	0–25	0.12
Tomato juice	0–25	0.25
Tomato paste (below 15%)	0–25	0.25
Tomato paste (above 15%)	12–72	0.5
Catsup	12–72	0.25
Beef extract	0–25	0.1
and "stock"	12–72	0.25
Condensed skim milk	12–72	0.25
Sweetened condensed milk	12–72	0.5
Lactose	12–72	0.25
Lactose	0–25	0.1
Condensed whey	12–72	0.5
Chocolate malt syrup	12–72	0.25
Chocolate syrup	12–72	0.5
Maple syrup	12–72	0.25
Molasses	12–72	0.25
Blackstrap	12–72	0.25

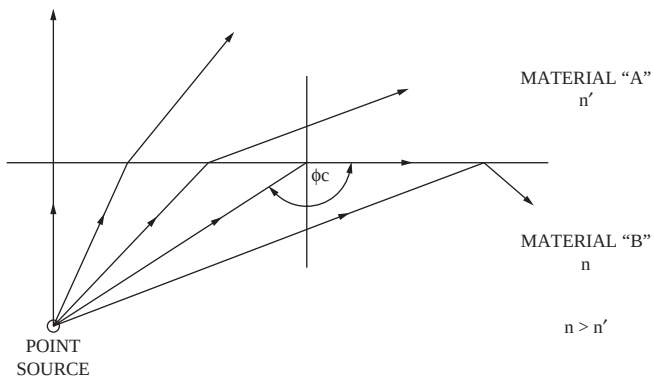

FIG. 8.52e
Illustration of refraction and reflectance.

Critical Angle of Refraction

A second phenomenon is observed with materials of different indices of refraction: when the angle of incidence exceeds a certain angle, the light ceases to be refracted and is totally reflected (Figure 8.52e). This angle is called the *critical angle* and is defined as

$$\phi_c = \text{arc sin} \frac{n'}{n} \qquad \textbf{8.52(3)}$$

The process refractometers in use today measure either the refraction angle or the critical angle of refraction. Table 8.52f provides a summary of the features and capabilities of both of these refractometer designs.

The differential refractometer measures the refraction angle changes as a function of sample RI. This is generally done by holding the incident light angle constant. In that case, Snell's law becomes

$$n = (1/\sin\beta) \qquad \textbf{8.52(4)}$$

The refractive indices of all materials vary with temperature, so the temperature must be compensated for unless the

© 2003 by Béla Lipták

TABLE 8.52f
Refractometer Comparison Summary

Differential	*Critical Angle Refractometer*	*Refractometer*
Measurement principle	Changes in angle of refraction	Changes in angle of total reflectance (critical angle)
Type sample	Clean translucent liquid	Liquids—clean or turbid, slurries
RI ranges (full-scale)	0.1 RI unit to 0.00005 RIO unit	0.1 RI to 0.005 RI
Sample flow rate	2–10 cc/min	Depends on type installation (unlimited)
Type of installation	Requires sample system	Can be used with sample system; can be installed in pipeline or vessel
Pressure rating	40 PSIG (276 kPa)	250 PSIG (1.7 MPa)
Ambient temperature	30–120°F (–1– 49°C)	30–300°F (–1–149°C)

measurement is made at the standard reference temperature of 68°F (20°C). Because temperature affects RI, it must be (a) held constant or (b) measured and compensated for in the process analyzer.

DIFFERENTIAL REFRACTOMETER

Single-Pass Design

Figure 8.52g illustrates the single-pass differential refractometer, which consists of a tungsten filament source, mask, sample flow cell with a sealed reference inner cell, beam splitter, and two opposed phototubes. The reference cell is filled with a solution having an RI value that corresponds to approximately the midscale of the measurement range.

The light beam passes unaltered through the perpendicular cell windows, creating a refraction angle only at the nonnormal window interface. The measured magnitude of the refraction angle is proportional to the difference between the RIs of the sample and of the reference solution.

The detector consists of a beam splitter and two opposed phototubes or photocells. The detector circuit can be designed so that the amplifier reads the ratio of the outputs from the two phototubes as a measurement of the displacement, or as the refraction of the light beam. Phototube irregularities, such as unequal surface response and unequal aging, limit the sensitivity, linearity, and range of this design. Therefore, a null-balance system is usually employed in which the ratio output is used to relocate the beam splitter, thereby rebalancing the light beam equally on the phototubes. The position of the beam splitter is then tracked as the measurement of process RI.

The reference cell angle and the distance between the cell and detector system determine the sensitivity and range of the design. A folded light path using mirrors helps maintain the unit in a reasonable package, even for a 40-in. (1-m) path length.

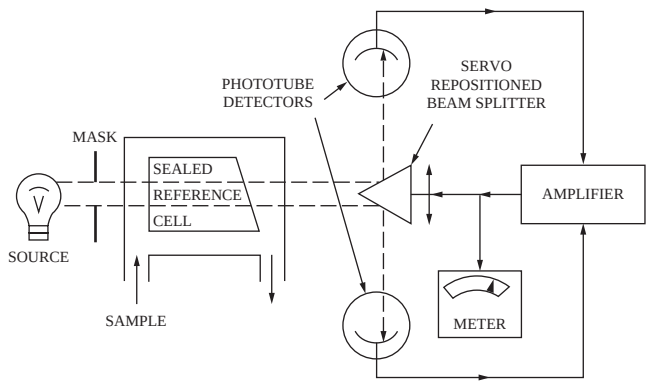

FIG. 8.52g
Single-pass differential refractometer design.

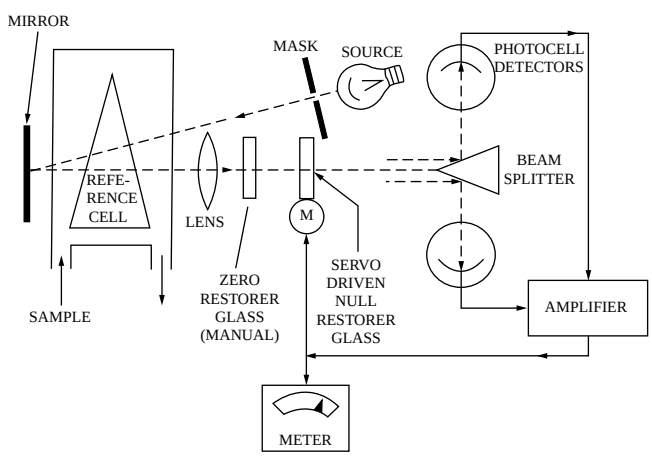

FIG. 8.52h
Two-pass refractometer block-diagram.

Two-Pass Design

The two-pass differential refractometer uses a triangular-shaped reference cell (Figure 8.52h) and a reflecting mirror. The reference cell shape presents two nonnormal surfaces that interface with the sample to create two refraction angles for the forward pass and two for the return pass.

The reference cell is filled with a solution that has an RI value corresponding to about mid-scale of the measured range. The optical system is zeroed using a sample solution with an RI of the zero value and by adjusting the zero meter reading. The displaced light beam (resulting from changes in sample RI) is detected by a change in the light intensities

© 2003 by Béla Lipták

received by the two photocells, or phototubes, which result in more light impinging on one than on the other.

The amplifier senses the unbalance and changes the position of the null restorer glass via a servodrive to rebalance the light on the photocells. The servomotor also drives a helipot that tracks the position of the null glass as the RI measurement varies.

Temperature Effects Sample temperature is critical in obtaining accurate refractive index measurements. The differential refractometer generally employs a sample temperature controller to maintain the sample at a constant temperature. In some designs, the entire prism assembly is also controlled for maximum stability.

The range of this refractometer is determined by the shape of the reference cell (the angle between two refracting surfaces), the thickness of the zero restorer glass, and the span attenuation in the meter circuit. This design is very sensitive, compact, and flexible.

Flowing Reference Cell The sealed reference cell can be replaced by a flowing cell to allow a differential measurement between two process streams. This approach has been used in blending operations to continuously monitor the difference in RI before and after blending. Extraction and filtration processes can use this system to monitor the difference in RI continuously before and after the extraction step.

CRITICAL-ANGLE REFRACTOMETER

The *critical angle* is the angle of incident at which light is totally reflected (see Figure 8.52e). The critical-angle refractometer receives the reflected light from a prism interface with the process sample (Figure 8.52i).

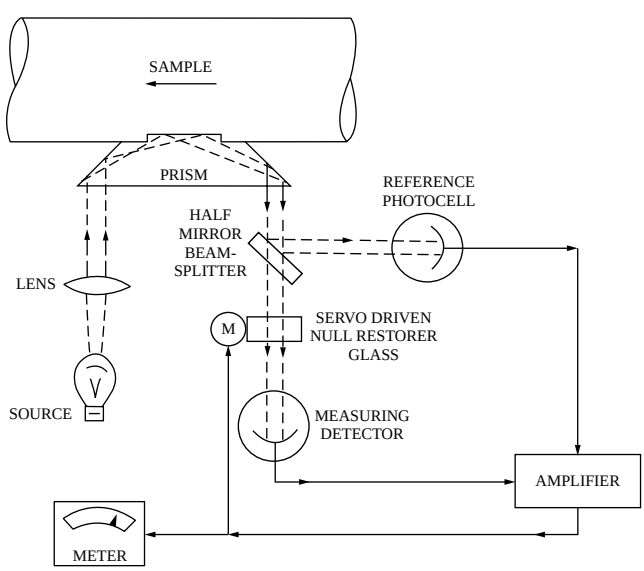

FIG. 8.52i
Schematic representation for the critical angle refractometer.

The light beam is focused on the prism–sample interface with different incident angles progressing across the width of the beam. Some of this light is transmitted into the sample medium, but reflection will occur only when the incident angles are larger than the critical angle. As the RI of the sample changes, the portion of the light beam that is reflected will also change, so the width of the reflected beam will change.

The point at which the change from refraction to reflection occurs is followed by the detector photocells. As the light beam width changes, more or less light falls on the measuring detector, causing an imbalance between the photocells. The amplifier senses this imbalance and repositions a restorer glass using a servo-balance system until the photocells are again in balance. A helipot in tandem with the null glass drive senses the position of the null glass as a measure of the critical angle.

The range of this instrument is determined by selection of prism glass material and restorer glass thickness.

Mounting and Compensation

This unit is frequently installed in line by mounting the prism assembly in a pipe and inserting this pipe section in the process line. The design also allows vessel mounting with the prism assembly inserted in a flange that can be attached to a vessel (storage tank, mixing tank, etc.). Such units can be used on slurry streams, opaque samples, and viscous samples that are not suited for measurement by differential refractometers.

If the temperature varies, temperature compensation can be provided by including a resistance thermometer or a thermistor-type sensor in the analyzer probe.

Design Variations

Figure 8.52j illustrates a probe-type refractometer design that is used in the food, paper, and chemical industries. This critical angle refractometer utilizes fiber optics and is microprocessor controlled.

The prism surface is wetted by the process fluid and, when light rays at different angles are directed at that surface, the rays arriving at a steep angle are mostly refracted, so the corresponding image sector is dark. On the other hand, the rays arriving at a flat angle are mostly reflected, so the corresponding image sector is light. The critical angle of reflection corresponds to the line where the light and dark regions meet. Hundreds of photocells are employed to accurately measure the position of the shadow edge and thereby to detect concentration of the process fluid, which rises as the dark area increases.

REFLECTED LIGHT MEASUREMENT

Some refractometer designs measure the total amount of reflected light, which also varies with the refractive index of the process fluid. One instrument (Figure 8.52k) uses a sapphire rod as a light guide, and it measures both the intensity

© 2003 by Béla Lipták

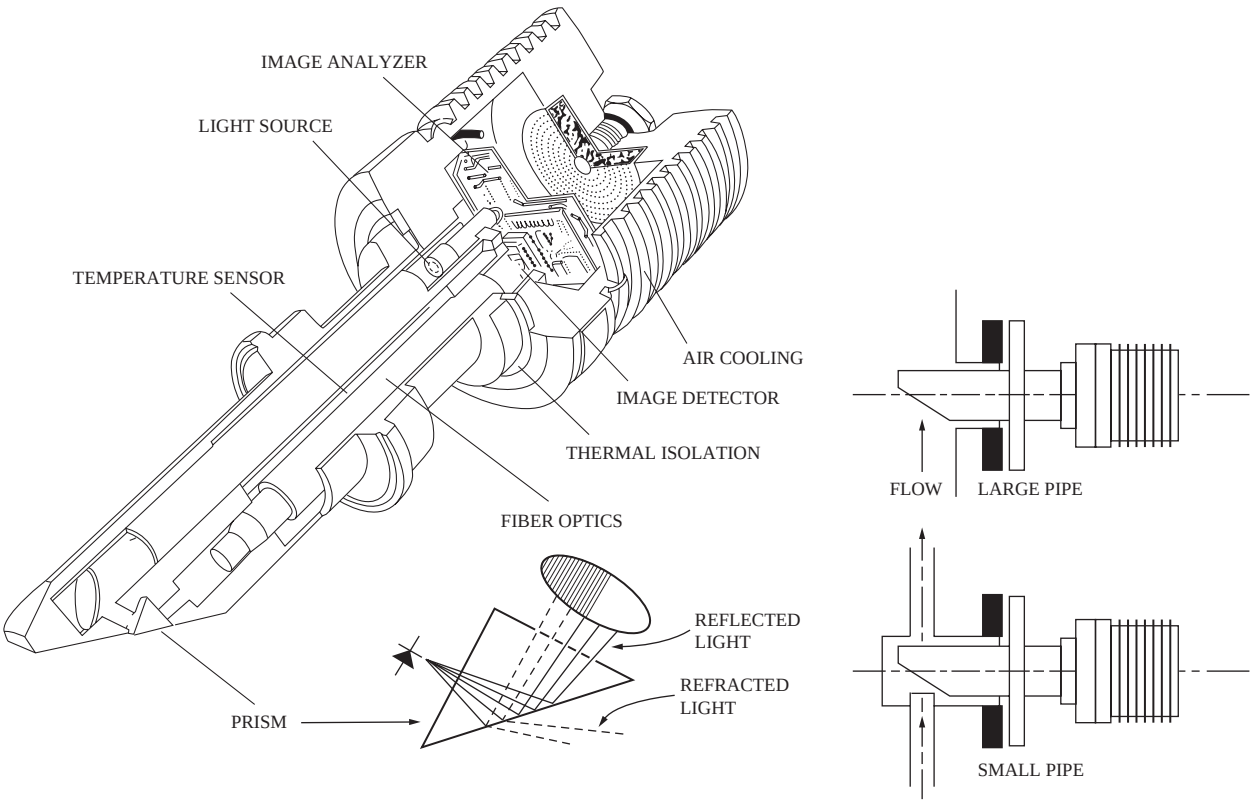

FIG. 8.52j
Probe-type critical angle refractometer. (Courtesy of K-Patents.)

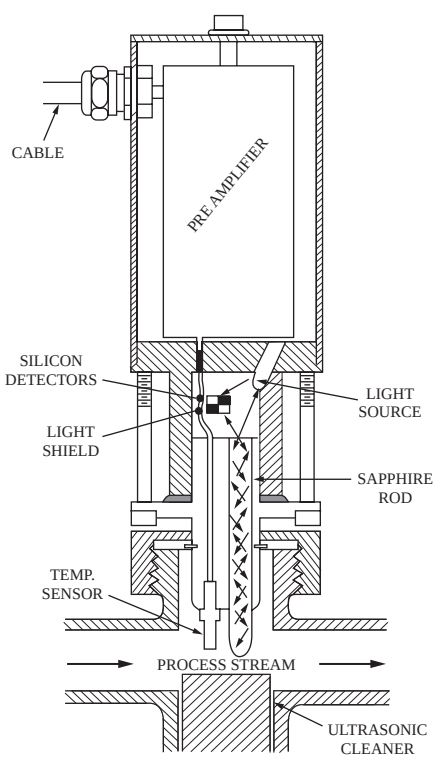

FIG. 8.52k
In-line, reflected-detecting refractometer with ultrasonic cleaner.

of the light entering the rod and also the intensity of the reflected light. The percentage of reflected light varies with the refractive index and therefore with concentration.

Fiber Optic Probe

Figure 8.52l describes a reflective fiber optic probe design. Here, a small fiber optic probe [0.25 or 0.125 in. (6 or 3 mm) diameter] is used. The light that is transmitted to the prism is reflected into the fiber optic probe. When the prism is immersed in a process fluid that has a higher refractive index than that of the prism, the reflected light will significantly decrease.

Such detectors can measure concentration, because refractive index changes with concentration. One advantage of these temperature-compensated fiber optic probes is that a single readout instrument can monitor up to four probes inserted in four different locations in the process. This lowers the unit cost of measurement.

CAPABILITIES AND LIMITATIONS

The refractometer is a nonselective instrument that measures the RI of the entire sample. The RI of a mixture follows the simple mixture law,

$$N_{mixture} = C_a N_a + C_b N_b + C_c N_c + \cdots \qquad \textbf{8.52(5)}$$

© 2003 by Béla Lipták

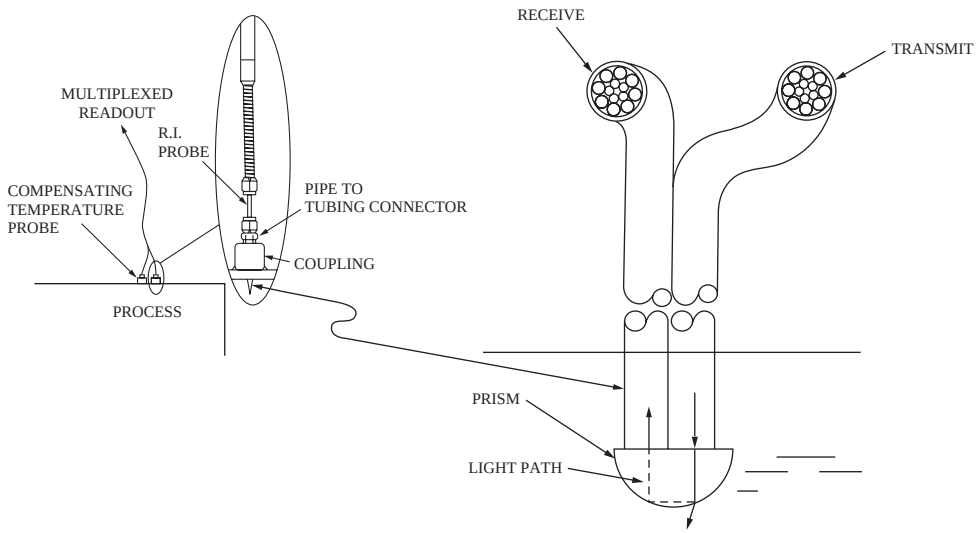

FIG. 8.52l
Temperature-compensated and multiplied fiber optic RI probe.

where

C_a, C_b, … = molecular concentrations of components a, b, c, …

N_a, N_b, … = the respective RI of components a, b, …

Thus, when used as a composition analyzer, the refractometer can monitor only binary mixtures.

Table 8.52f lists the RI ranges that the differential and the critical angle refractometers can handle, and Equation 8.52(5) can be used to determine the RI range required for an expected concentration change.

Because these are optical devices, it is necessary to keep their prism surfaces clean. The types of probe cleaners discussed in Sections 8.2 and 8.48 are also applicable to these instruments. The standard options offered by most suppliers include chemical or water washers, among other options.

Another limitation of this analyzer is a result of the temperature sensitivity of the angle of refraction. All refractometers must be temperature compensated unless used in a constant-temperature process.

CONCLUSIONS

When used for binary mixtures, the refractometer can be a very accurate analytical tool (Figures 8.52m and Figure 8.52n), but it is usually unable to detect trace impurities. Mixtures with trace components having RI values close to one of the major components may act as binary samples and can give satisfactory results. The differential refractometer is more sensitive than the critical angle refractometer, but it requires a sample-handling system and is limited to applications in which the sample is clean. The critical angle refractometer can monitor dirtier streams and can be installed in line.



FIG. 8.52m
On-line refractometer for measuring the concentration of binary mixtures. (Courtesy of Electron Machine Corp.)

Bibliography

1998 global photonics technology forecast, *Photonics Spectra,* January 1998.

Beebe, K. R. et al. *Chemometrics, A Practical Guide,* John Wiley & Sons, New York, 1998.

© 2003 by Béla Lipták

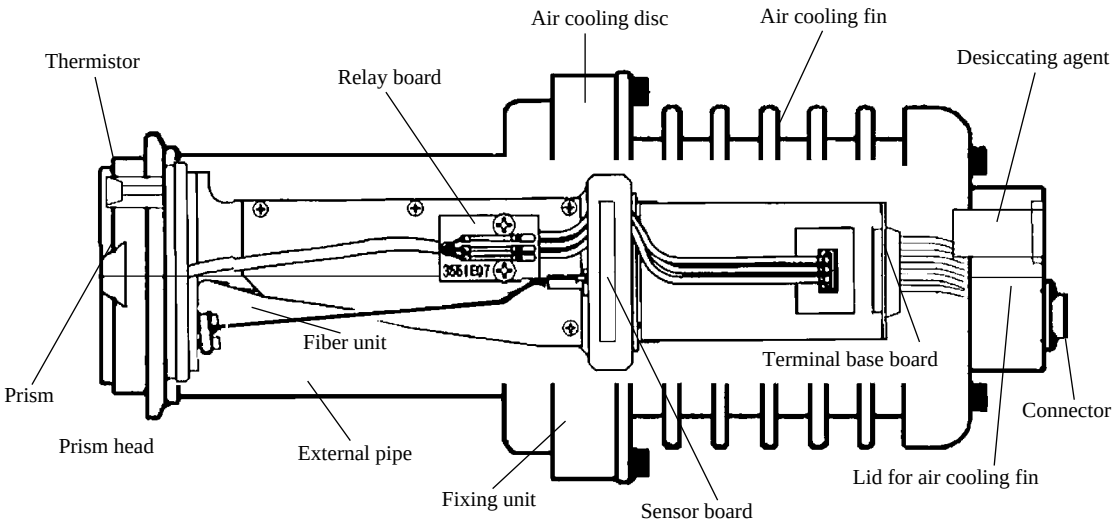

FIG. 8.52n

The main components of the detector section of a refractometer are shown here; the power supply and display sections are not shown. (Courtesy of NSG Precision Cells Inc.)

Dierking, J. O., *Use of Continuous In-Line Refractometers in Beverage Applications,* International Society of Beverage Technologists (formerly Society of Soft Drink Technologists), Homosassa, FL, April 19, 1983.

Fresenius, W., *Water Analysis,* Springer-Verlag, New York, 1988.

Gunnell, J. and Van Vuuren, P., Process analytical systems: a vision for the future, *J. Proc. Anal. Chem.,* 6(1), 1–5, 2001.

LaBell, F., Switch from batch increases juice production by 30%, *Food Proc.,* June 1987.

MacRae, M., Analyzing new options, *Pharm. Tech. Cleveland,* 26(2), 118, 2002.

Maley, L. E., Analysis by in-line refractometer, *ISA J.,* October 1962.

Workman, J., Jr., Imaging, chemometrics and new developments in sensor technologies, *Standardization News,* October 2002.

Yazhak, E., Microminiature refractive index sensor, *Proc. 1992 ISA Conf.,* Houston, TX, October 1992.

© 2003 by Béla Lipták

8.53 Rheometers

J. MAGDA (2003)

Types:	A. Cone-and-plate B. Parallel-disk C. Coaxial-cylinder D. Rectangular torsion E. Bending and tension/compression F. Extensional flow rheometer G. Capillary rheometer
Linear Properties:	A. Elastic storage modulus vs. frequency B. Viscous loss modulus vs. frequency
Nonlinear Properties:	A. Viscosity vs. shear rate B. First normal stress difference vs. shear rate C. Second normal stress difference vs. shear rate D. Extensional viscosity vs. rate of extension
Frequency Range:	0.01–200 Hertz
Pressure:	Atmospheric
Temperature Range:	–150°C to +600°C
Cost:	$30,000 to $200,000
Partial List of Suppliers:	Bohlin (www.bohlinusa.com) Brabender (www.cwabrabender.com) Haake (www.haake.de) Paar Physica (www.paarphysica.com) RheoSense (www.rheosense.com) TA Instruments (www.tainst.com)

INTRODUCTION

Viscometers (Sections 8.62 and 8.63) are used solely for the measurement of the viscosity of fluids. A rheometer by definition can be used not only to detect viscosity but also to measure the viscoelastic properties of fluids, semisolids, and solids. These additional capabilities of rheometers may justify their consideration, in spite of the additional expense, when high-quality polymeric (thermoplastic) raw materials are to be manufactured.

Reasons for Using Rheometers

Some of the justifications for performing rheological analysis on molten thermoplastics prior to molding or extrusion operations are as follows:

1. *Solvent-free characterization of the molecules present in the polymer.* Thermoplastic raw materials are a mixture of molecular species that vary widely in size and degree of molecular branching (see Section 8.35 on molecular weight measurement). Rheological analysis of a small amount of the molten polymer without solvent can be used to detect batch-to-batch variations in the polymeric raw material that may be deleterious to the properties of the final product. An industrial viscometer such as a melt flow indexer will suffice to detect large variations in the average molecular weight of the polymer. However, the entire molecular weight distribution (MWD) of the polymer sample can only be determined with the extra capabilities of a rheometer.

© 2003 by Béla Lipták

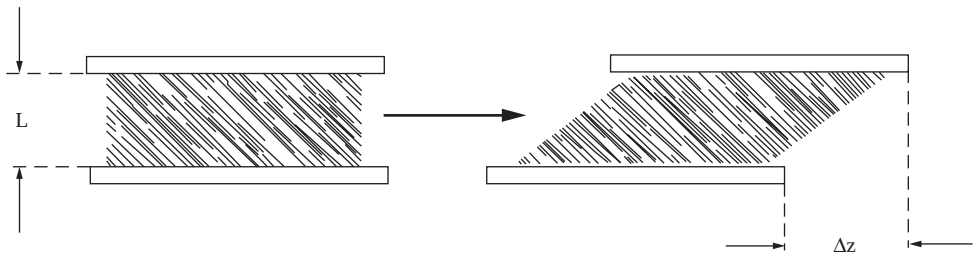

FIG. 8.53a
Stress relaxation test at fixed shear strain.

2. *Measurement of polymer flow properties that are key to the stability of polymer processing flow.* When attempting to switch the raw material used in an existing manufacturing process, it is important to maintain the values of key polymer flow properties, or significant modifications of the manufacturing process will be necessary. Many of these key nonlinear flow properties (viscosity, extensional viscosity, normal stress differences) can be measured using a rheometer at high shear rates or high extension rates under conditions that mimic the conditions present in the actual polymer processing flow.

Dynamic Mechanical Analysis

Rheometers are also useful for analyzing solids manufactured from polymers. Polymer solids, of course, cannot flow in a rheometer, but they nonetheless exhibit both viscous and elastic behavior when undergoing oscillatory deformations and hence are said to be *viscoelastic materials*. Some of the reasons for using oscillatory rheometers to perform dynamic mechanical analysis (DMA) on viscoelastic solids are as follows:

1. *Determination of the glass transition temperature.* The temperature range over which a solid part can be used depends to a large extent on the glass transition temperature (T_g) of the polymer from which it is fabricated. DMA is a very sensitive technique for measuring T_g. For an amorphous polymer, the value of the dynamic shear modulus measured in DMA experiments at fixed frequency drops by three orders of magnitude when the temperature exceeds T_g.
2. *Performance prediction.* Polymeric solids differ from other materials in that the mechanical properties depend strongly on temperature and time as well as on the polymer molecular weight distribution, the presence of additives or fillers, and the process conditions used to fabricate the part. Hence, tabulated mechanical properties for different polymers are of limited accuracy, and DMA experiments used with time-temperature superpositioning (discussed later) provide a better method for estimating the long-term mechanical behavior of a given polymeric solid part.

TESTS TO DISTINGUISH LIQUIDS FROM SOLIDS

The goal of scientific rheometry is to study the mechanical forces in a liquid or a solid sample subjected to a known and controlled velocity field or strain field.

Shear-Strain Tests

A liquid, by definition, cannot resist a shear stress at rest, which means that the shear stress must eventually decay to zero in the absence of flow. Hence, the rheological experiment known as the *shear stress relaxation* shown schematically in Figure 8.53a is an excellent method for determining whether a given polymer sample is a viscoelastic liquid or a viscoelastic solid.

In this experiment, one imposes a chosen value of the shear strain on the sample and measures the resulting shear stress as a function of time. Initially, the sample is in a stress-free rest state between two parallel semi-infinite solid plates separated by a gap L. At time equal zero, the top plate is suddenly moved to the right by a chosen distance Δz while the bottom plate is held stationary. Assuming good adhesion with no slip at the sample/plate interface, this imposes a time-independent shear strain γ on the sample equal to $\Delta z/L$.

The horizontal force F exerted to keep the bottom plate stationary is measured as a function of time. The value of this force divided by the sample-contacting area A of the plate is equal to the shear stress τ. If τ eventually decays to zero, the sample is a liquid; otherwise, the sample is a solid. In a linear stress relaxation experiment, the sample is subjected to a small strain that only slightly perturbs the sample on a molecular level from its equilibrium state. For sufficiently small strains, the linear shear stress relaxation modulus G is given by

$$G = \tau/\gamma \qquad \textbf{8.53(1)}$$

The key test for a liquid is, "Does G approach zero after the passage of a long time period (t)?" A more practical way to answer this question is by the use of oscillatory shear experiments in dynamic mechanical analysis (DMA), a technique described in more detail later. The influence of time t in a linear stress relaxation experiment is equivalent to the influence of the period of oscillation in DMA. Hence, the key test for a liquid can be rephrased as, "Does the elastic storage modulus G′ (defined later) approach zero at low frequencies?"

© 2003 by Béla Lipták

Stress-Controlled Tests

The *shear creep test* is complementary to the stress relaxation experiment. In shear creep, one imposes a chosen value of the shear stress and measures the resulting value of the strain as a function of time. Initially, the sample is in a stress-free rest state between two parallel semi-infinite solid plates separated by a gap L. At time zero, the top plate is suddenly pulled to the right with a constant force per unit area τ (τ = F/A) while the bottom plate is held stationary. This imposes a time-independent uniform shear stress τ on the sample, assuming good adhesion at both sample–plate interfaces.

If, after the passage of a long time period, the top plate is observed to move a certain distance Δz to the right and stop, then the sample is a solid. If, on the other hand, the top plate does not stop moving but reaches a terminal velocity V, then the sample is a liquid, and the velocity field within the liquid is linear and called *rectilinear simple shear flow.* In this case, the shear rate or rate of strain κ is calculated as V/L, and the shear viscosity μ is defined as the shear stress divided by the shear rate.

Unless κ is very small, simple shear flow is a so-called nonlinear flow, because the alignment of the polymer molecules in the sample will be significantly perturbed by the flow. Because the degree of perturbation increases with shear rate κ, it is not surprising that the shear viscosity value μ also varies with κ, which is called *non-Newtonian behavior.*

Nonlinear Shear Flow Properties (μ, N_1, N_2)

A non-Newtonian liquid in shear flow has three independent nonlinear flow properties: viscosity (μ), first normal stress difference (N_1), and second normal stress difference (N_2).

Shear viscosity μ is a measure of the liquid's resistance to flow, and N_1 and N_2 are manifestations of liquid elasticity. For Newtonian liquids such as water, N_1 and N_2 are both zero. However, polymer molecules in steady shear flow are stretched along the flow direction and compressed along the direction perpendicular to the plates in Figure 8.53b, which gives rise to nonzero N_1 and N_2 values. Although N_1 and N_2 are difficult to measure, there is a growing consensus that their values are important to the behavior of thermoplastics in practical polymer processing flows.

In extrusion, when a thermoplastic exits the die into air or another cooling fluid, the amount of extrudate die swell depends strongly on the value of N_1 for the thermoplastic. The value of N_2 is thought to be critical to the stability of multilayer coextrusion, which is a manufacturing process in which two immiscible thermoplastics are extruded through the same die so as to produce a layered product. Even if the two thermoplastics have identical viscosity curves, a difference in N_2 values may result in a flow disturbance that disrupts the layered structure.

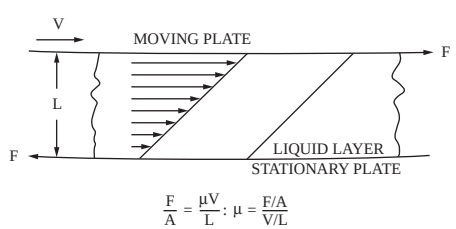

FIG. 8.53b
Rectilinear simple shear flow.

RHEOMETER SELECTION

In selecting a rheometer design to analyze a polymeric sample, the following questions should be considered:

1. What class of deformation or flow is most relevant, shear or extension (elongation) or a combination of these two basic types, such as bending?
2. Should the sample deformation rate be constant or oscillatory? A constant rate of deformation is impossible for a viscoelastic solid. For constant deformation rate experiments, what is the necessary range of shear rates or extension rates? For oscillatory deformations, what is the necessary range of frequencies?
3. Will the rheometer control the amount of stress applied to the sample (i.e., stress-controlled rheometer) or the amount of strain applied to the sample (i.e., strain/strain-rate-controlled rheometer). Strain/strain-rate-controlled rheometers cannot be used to measure the true value of the yield stress for weak solids.
4. Will the sample adhere to the stainless steel fixtures of the rheometer so that the no-slip boundary condition is satisfied, or will it be necessary to clamp the sample? Are large solid particles suspended in the sample, comparable in size to the gap of the proposed rheometer fixture? If so, a fixture with a larger gap must be used.
5. Is the sample corrosive, volatile, combustible, or otherwise destructive to stainless steel rheometer fixtures? To study the gelation of network-forming materials like epoxies, disposable rheometer fixtures will probably be required.
6. What is the required temperature range for testing? Liquid nitrogen cooling may be required for subambient testing temperatures.
7. What is the sensitivity required for stress or strain measurement? What is the maximum stress value to be measured or applied to the sample?

RHEOMETER DESIGNS

Cone-and-Plate Design

In shear creep experiments, all viscoelastic liquids are expected to exhibit the velocity field known as simple shear flow at steady state (Figure 8.53b), barring the occurrence of certain flow disturbances that will be discussed later. For liquids with long relaxation times, the use of rotational shear flow geometries is the most practical method for achieving this steady-state condition in the laboratory.

© 2003 by Béla Lipták

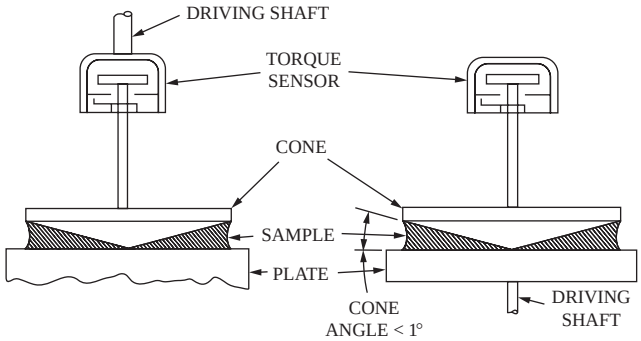

FIG. 8.53c
Cone-and-plate instruments.

The cone-and-plate flow geometry (Figure 8.53c) consists of a stationary flat plate (really, a disk) and a rotating cone with a very shallow cone angle. The tip of the cone is truncated by a small amount, on the order of 50 to 100 μm. During testing, the cone is lowered so that its tip, if it were present, would just touch the center of the plate. The liquid sample fills the narrow gap between the cone and the plate and is held in place during testing by surface tension forces, provided that the inertia is not too large.

The temperature of the sample is often monitored with thermocouples embedded in the rheometer plate. In a strain-rate-controlled cone-and-plate rheometer, a variable-speed motor drives the cone at a precise rotation speed while the torque required to keep the rheometer plate stationary is calculated from the measured deflection of a torsion spring. Hence, the strain-controlled rheometer can be operated in a mode very similar to the idealized stress relaxation experiment (Figure 8.53a).

In a stress-controlled cone-and-plate rheometer, a constant torque is applied to the drive shaft of the cone, and the rotation of the cone that results is measured with an optical encoder. Hence, the stress-controlled rheometer can be operated in a mode very similar to the idealized shear creep test already discussed. For both types of rheometers, the cone rotation speed Ω and the torque T will have chosen or measured values at steady state, assuming that the sample is a liquid. The velocity field in the liquid is expected to be identical on a local level to rectilinear simple shear flow. The cone-and-plate flow geometry is widely used for testing non-Newtonian liquids, because the shear rate value κ is the same everywhere within the sample and is given by

$$\kappa = \Omega/\alpha \qquad \textbf{8.53(2)}$$

Here, Ω is the rotation speed of the cone, and α is the cone angle. Assuming that the velocity field in the sample is simple shear flow as expected, the torque T on the rotating cone is related to the shear stress τ by fluid mechanics.

$$\tau = 3\ T/(2\pi R^3) \qquad \textbf{8.53(3)}$$

Shear Flow Properties In Equation 8.53(3), R is the radius of the cone and the plate. The non-Newtonian shear viscosity is defined as

$$\mu = \tau/\kappa \qquad \textbf{8.53(4)}$$

Equations 8.53(2) through 8.53(4) are solved simultaneously to give the viscosity value for both stress-controlled and strain-rate-controlled cone-and-plate rheometers. Due to elasticity, a polymeric liquid will tend to push the cone and plate apart during flow. By measuring the total vertical force F_N exerted on the plate during testing, one can calculate the first normal stress difference of the sample using a result from fluid mechanics as follows:

$$N_1 = 2F_N/(\pi R^2) \qquad \textbf{8.53(5)}$$

The third independent shear flow property, N_2, cannot be measured using commercially available rheometers. However, at least one company is attempting to develop a new cone-and-plate design in which N_2 can be calculated from measurements of the difference in pressure between the center and the rim of the rheometer plate.

Torque Ranges The most important cone-and-plate rheometer design feature is the method by which the shear stress is measured (or the strain, in a stress-controlled rheometer).

In a strain-rate-controlled rheometer, the motor that drives the cone has a typical rotation speed range of 0.001 to 100 rad/s. Typical cone angles range from 0.02 to 0.10 rads. Hence, according to Equation 8.53(2), the theoretical shear rate available with the rheometer is 0.01 to 5000 s^{-1}. However, the actual available shear range is usually much smaller as a result of torque transducer sensitivity limitations at low shear rates and flow disturbances at high shear rates (see below).

Because the onset of flow disturbances varies considerably with the material being tested, no shear rate range is given in the feature summary at the beginning of this section. In a rate-controlled rheometer, both the torque T and the total vertical force F_N are usually calculated from the deflection of a spring measured using a displacement transducer of a differential transformer type. Care must be taken that the vertical deflection of the spring used to measure F_N does not cause a significant change in the gap between the cone and the plate. Because rotational friction from the instrument itself is detrimental to sensitivity, top-of-the-line rheometers employ air bearings on the cone drive shaft.

A given rheometer is sometimes said to cover a certain measurable range of fluid viscosities, but it is really more accurate to say that the rheometer covers a certain measurable range of torques. A typical rheometer transducer can be used accurately over a torque range covering perhaps four orders of magnitude, from 0.00001 to 0.1 Nm. Alternative transducers covering both higher and lower torque ranges are also available.

© 2003 by Béla Lipták

For a given rate-controlled rheometer, the minimum viscosity value that can be measured can be calculated from the minimum measurable torque value, the maximum possible shear rate, and the maximum available cone-and-plate radius using Equations 8.53(2) through 8.53(4). These equations show that, for low-viscosity fluids, the torque value T, and hence measurement accuracy, can be enhanced by increasing the shear rate κ or by increasing the cone-and-plate radius R.

Rheometer Selection The choice between a strain/strain-rate-controlled rheometer and a stress-controlled rheometer often depends on whether stress relaxation data or shear creep data is more desirable. However, the stress-controlled rheometer can be operated in strain-controlled mode through use of a feedback control loop that manipulates the value of the imposed torque; however, time to set strain is longer than for a strain-controlled rheometer. In addition, strain-rate-controlled rheometers should not be used to study the flow properties of a sample that might be a weak solid, because the driven rotation of the cone will damage the sample structure.

Observation of hysteresis in the viscosity curve (μ vs. κ) indicates that the structure of the sample has been damaged by flow. The properties of a fragile solid can be measured by using a strain-controlled rheometer in low-amplitude oscillatory measurements (discussed in a later section) or by using a stress-controlled rheometer. In a stress-controlled rheometer, a strain transducer is used to measure sample strain or rate of strain in response to a chosen shear stress value τ. If the sample has a yield stress value that exceeds τ, then the measured steady-state rotational speed of the cone will be zero, a result that indicates that the sample is a weak solid.

Experimental Difficulties The goal of scientific rheometry as applied to liquids is to study the mechanical response of the liquid when subjected to a known and controlled velocity field. Unfortunately, there is no way to know beforehand whether a given rheological sample will exhibit the expected velocity field in the cone-and-plate device or any other rheometer. If the actual velocity field within the rheometer is disturbed from the expected flow pattern, then the rheometer software will probably calculate incorrect values for the viscosity and other rheological properties.

Because of flow field disturbances, it is virtually impossible to measure μ, N_1, and N_2 values with a cone-and-plate flow geometry at the high shear rate values typical in manufacturing operations ($\kappa = 10 - 1000\ s^{-1}$ for extrusion, $\kappa = 1000 - 50000\ s^{-1}$ for injection molding). Figure 8.53d shows a sketch of one such flow disturbance called *edge fracture*. These flow disturbance are thought to be driven by elasticity or inertia and can be delayed to higher shear rates by reducing the cone angle or the cone-and-plate radius. They do not occur when the cone-and-plate geometry is used for linear rheological measurements. This is a principal reason why linear properties G′ and G″ are more commonly measured in industrial laboratories than N_1 and N_2, even though linear rheological properties have no direct relevance to the flow conditions actually present in thermoplastic processing flows, which are usually very nonlinear.

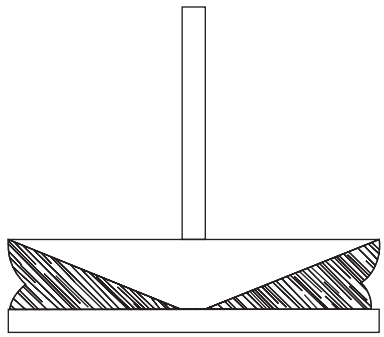

FIG. 8.53d
Flow disturbance due to edge fracture of sample in cone-and-plate instrument.

Dynamic Mechanical Analysis Linear rheological properties are measured when the strain field or velocity field only slightly perturbs the sample on a molecular level from its equilibrium state. For molten thermoplastics, linear rheological measurements have no direct relevance to polymer processing flows, because most practical manufacturing flows are highly nonlinear. However, linear rheological measurements are still very useful for characterizing the polymer molecules or making a rheological *fingerprint* of the raw material.

Linear rheological properties are most commonly measured in oscillatory experiments called dynamic mechanical analysis (DMA). For a liquid in oscillatory shear, the typical experimental setup is identical to that for simple shear flow (Figure 8.53c), with the sole exception being that the cone does not rotate continuously in one direction but, rather, alternates between clockwise and counterclockwise rotations periodically at an angular frequency ω.

The rheometer plate is held stationary, which imposes a sinusoidal shear strain on the sample, as sketched in Figure 8.53e. If $\Delta\Phi$ is the maximum angular displacement of the cone, then the amplitude of the strain curve is given by

$$\gamma_{max} = \Delta\Phi/\alpha \qquad \textbf{8.53(6)}$$

where α is the cone angle. The torque necessary to keep the plate from rotating is measured and used to calculate the shear stress τ via Equation 8.53(3). Typical behavior for the shear stress τ is also plotted against time in Figure 8.53e. Note that the shear stress and the shear strain are both sinusoidal functions of time, and they both have the same angular frequency ω. However, there is a phase shift between the two curves—the strain curve lags the stress curve by a constant phase angle denoted δ.

Linear Viscoelastic Shear Moduli G′, G″ The amplitude of the shear stress curve divided by the amplitude of the shear strain curve is denoted G*, the dynamic shear modulus. Thus,

© 2003 by Béla Lipták

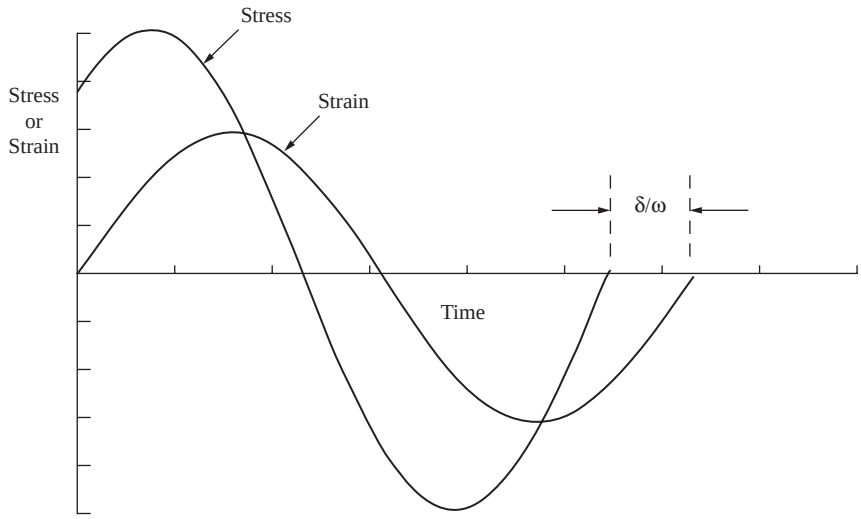

FIG. 8.53e
Typical stress and strain curves in DMA.

the oscillatory shear experiment yields two independent rheological properties: G* and δ. To obtain linear rheological properties, one needs to check that the measured values of G* and δ are independent of γ_{max}. An alternative set of properties are the elastic storage modulus (G′) and the viscous loss modulus (G″), given by $G' = G^* \cos \delta$, $G'' = G^* \sin \delta$.

For a cyclical shear deformation process at frequency ω, G′ is a measure of the sample's ability to store elastic strain energy, and G″ is a measure of viscous energy dissipation. The relative importance of energy dissipation and energy storage is given by the loss tangent tan δ,

$$\tan \delta = G''/G' \qquad \textbf{8.53(7)}$$

The value of tan δ is infinite for a purely viscous liquid, zero for a perfectly elastic solid, and intermediate between these two extremes for a real viscoelastic material. However, the mechanical behavior of most viscoelastic materials (solid or liquid) becomes more like the perfectly elastic solid as the frequency is increased, which may be explained as follows.

When a polymeric sample is subjected to a shear strain, the polymer molecules have many different modes for relaxing the stress with widely varying relaxation times. At very low oscillation frequencies, almost all of these relaxation modes are fast enough to be operative, so energy storage is minimal. Conversely, at very high frequencies, most of the polymer molecules do not have sufficient time to relax during the period of oscillation ($2\pi/\omega$). Thus, the polymer molecules remain stretched throughout the entire oscillation cycle, giving rise to increased elastic energy storage and increased shear modulus G′.

Molecular Weight Distribution Polymeric materials have a wide spectrum of relaxation times, with each relaxation time corresponding to a different possible mode of mechanical relaxation. As explained in the preceding section, one can probe the mechanical relaxation processes that occur at different time scales by measuring oscillatory shear properties at various frequencies. The largest molecules in the sample contribute to relaxation processes occurring at long times or low frequencies, whereas small molecules contribute to relaxation at high frequencies.

In recent years, rheometer companies have introduced software that can be used to invert curves of G′ and G″ vs. ω measured for a molten thermoplastic to give the molecular weight distribution (MWD) of the sample (Section 8.35). This method of estimating the MWD is more sensitive to the presence of polymer branches and high-molecular-weight *tails* in the sample than traditional solution-based methods such as gel permeation chromatography (Section 8.35). However, the theory on which the inversion software is based is still evolving and thus may not work for all types of polymers. Dynamic curves measured on samples in the solid state cannot be inverted to give the MWD.

Time-Temperature Superposition Time-temperature superposition is an approximate method used by experimental rheologists to extend the effective frequency range of a rheometer in DMA experiments. As an example, suppose one is interested in predicting the in-use mechanical performance of a polymeric solid subjected to a constant stress for one week at 25°C. The appropriate frequency range for DMA of the solid at 25°C would be $(1 \text{ week})^{-1} \approx 10^{-6} \text{ sec}^{-1}$, which might be too low to access with a given rheometer. However, if the empirical time-temperature shift factor for the sample (a_T) is known to be 1×10^{-3} for shifting between 25°C and 90°C, then the appropriate frequency range for DMA at 90°C is $10^{-6} \text{ sec}^{-1}/a_T = 10^{-3} \text{ sec}^{-1}$, which may be accessible to the rheometer motor.

If the principle of time-temperature equivalency is valid for this sample, then the value of G* measured at 90°C and a frequency of $\omega = 10^{-3} \text{ sec}^{-1}$ is approximately equal to the

© 2003 by Béla Lipták

value of G* for the same sample at 25°C and $\omega = 10^{-6}$ sec^{-1}. Unfortunately, this principle fails for many complex polymer materials. In particular, the principle fails if the sample has a phase transition in the temperature range between the use temperature and the testing temperature.

Conversion Among Rheological Properties Linear rheological properties measured in oscillatory shear can be rigorously converted to linear rheological properties defined for stress relaxation tests, shear creep tests, or any other linear experiment. The software needed for the conversion is often supplied with the rheometer. However, the software cannot be used to calculate nonlinear rheological properties such as the non-Newtonian viscosity vs. shear rate.

Parallel-Disc Design

The principal advantage of the cone-and-plate instrument is that it imposes a uniform value of the strain rate κ on the sample in flow experiments and a uniform value of the shear strain γ in DMA experiments. This is particularly useful when analyzing liquids such as molten thermoplastics having properties that strongly depend on κ.

Unfortunately, the cone-and-plate geometry cannot be used to analyze solids. Recall that the cone, which has a truncated tip, should be slowly lowered into the sample until the truncated region is only 50 to 100 μm above the plate, depending on the cone. This cannot be done with solid samples. Probably, it should not be done either with liquid samples containing particles larger than a few micrometers in size, because particles of this size are large enough to disturb the flow field in the narrow gap region of the cone-and-plate instrument.

Parallel-Disc Geometry The parallel-disc rheometer geometry (Figure 8.53f) is obtained by replacing the cone in a cone-and-plate instrument with a stainless steel disc of the same diameter. All other features of the rheometer, including transducers and drive motors, remain the same. The sample must be cut or molded into a disc of uniform thickness and radius equal to the rheometer disc radius. The sample is sheared in between the two parallel stainless steel discs or plates, with the same rheometer gap at all radial positions. The parallel-disc geometry can be used to study a solid sample of any thickness, provided that the sample adheres to the surfaces of the discs. For analysis of suspensions, one can minimize wall-slip errors by choosing the gap to be much larger than the suspended particle size.

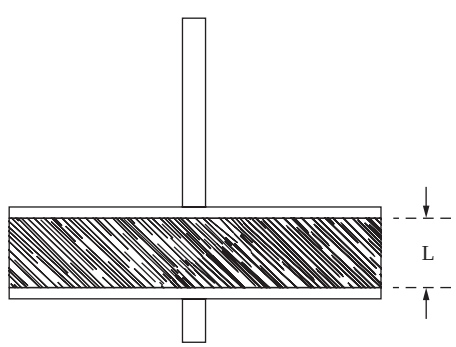

FIG. 8.53f
Parallel-disk instrument.

The parallel-disc instrument, like the cone-and-plate, can be used to make either stress-controlled or strain-controlled measurements on the sample in steady-shear flow or oscillatory shear strain. The flow field in the instrument is expected to be equivalent to simple shear flow (Figure 8.53b) on a local level, but the local value of the shear rate κ increases with radial coordinate. The maximum value of the shear rate occurs in the sample located at the rim of the parallel discs, and is equal to

$$\kappa_{max} = R\ \Omega/L \qquad \textbf{8.53(8)}$$

Here, R is the radius of the discs, Ω is the angular speed of the rotating disc, and L is the gap between the discs. The parallel-disc instrument can be used to measure the viscosity μ, N_1, G', or G''.

Limitation The principal disadvantage of the instrument arises from the variation of the shear rate value within the sample. As a consequence, the parallel-disc instrument cannot be used to make a single-point measurement of the viscosity of a non-Newtonian liquid. This may be seen from the fluid mechanics equation used to calculate the viscosity. If the shear rate at the rim of the discs is κ_{max}, and the torque on the discs is T, then the sample viscosity value at shear rate equal to κ_{max} is given by

$$\mu = T(2\pi R^3 \kappa_{max})^{-1}\,[3 + d\ \ln(T/(2\pi R^3))/d\ln(\kappa_{max})] \qquad \textbf{8.53(9)}$$

Equation 8.53(9) contains the derivative of the torque with respect to the shear rate at the rim, in contrast to the analogous equation [Equation 8.53(3)] used with the cone-and-plate instrument. Hence, to determine the viscosity at a single value of the shear rate, one has to measure the torque at several different rim shear rate values and then numerically evaluate the derivative in Equation 8.53(9).

Rectangular Torsion Design

The parallel disc instrument can be used only with solid samples that adhere to the stainless steel discs so that the *no slip* boundary condition is satisfied. *Slip* refers to the occurrence of relative motion between the steel and the sample located at the steel/sample interface. When slip occurs during DMA experiments, the computer software will use a value for the strain that is larger than the true value imposed on the sample.

One way to detect the occurrence of slip is to see if slight compression of the sample between the parallel plates has a

© 2003 by Béla Lipták

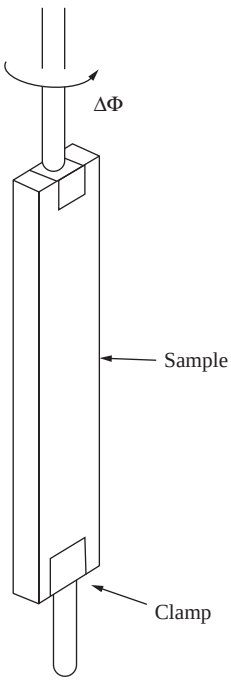

FIG. 8.53g
Rectangular torsion instrument.

drastic effect on the DMA results. When slip is a problem, the rectangular torsion instrument (Figure 8.53g) offers a viable alternative to the parallel-disc instrument for solid samples. The sample must be cut or molded into a thin rectangular specimen of uniform thickness.

The specimen is clamped into the instrument at both ends, and the clamping force is adjusted so that no slip can occur. During testing, one clamp undergoes low amplitude oscillatory rotations at frequency ω while the torque required to keep the other clamp stationary is measured with a torque transducer. The experimentally determined properties are the dynamic shear moduli of the sample, G′ and G″, as a function of frequency.

Torsional DMA can be used to identify the specimen glass transition temperature as the temperature at which G′ drops precipitously at fixed frequency. However, torsional DMA cannot be used to determine the MWD of the specimen.

Coaxial-Cylinder Design

The principal advantage of the coaxial-cylinder instrument (Figure 8.53h) is a large surface area for contact between the sample and the instrument, which increases torque levels and hence is advantageous for measuring low viscosity values. However, the instrument cannot be used to measure normal stress differences and cannot easily be used with solid samples. The liquid sample completely fills the narrow gap or annulus between two concentric cylinders.

During testing, the outer cylinder (called the *cup*) is rotated while the inner cylinder (the *bob*) is held stationary. When the cup is rotated continuously, the flow field in the

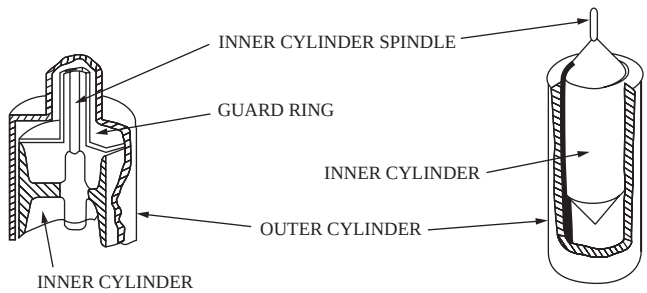

FIG. 8.53h
Coaxial-cylinder instruments.

sample looks like simple shear flow (Figure 8.53b) on a local level. However, as with the parallel-disc instrument, the shear rate value varies with location within the sample. The sample viscosity is calculated from the measured torque on the bob. Linear shear moduli G′ and G″ can also be measured in experiments in which the cup undergoes oscillatory rotations.

Tension/Compression and Bending Designs

All of the instruments considered thus far impose a shear deformation (Figure 8.53a) on the sample. However, the behavior of a solid sample during tension, compression, or bending may also be of interest, and instruments are also available for these types of deformations.

In fact, the principal difference between a so-called *rheometer* and a *dynamic mechanical analyzer* is the number of instruments available with the latter for applying various bending and tensile deformations on solid samples. The bending and tensile/compression deformations are usually applied to the specimen as an oscillatory function of time at angular frequency ω. When a small time-independent uniaxial tensile deformation is applied to a specimen, the ratio of the tensile stress to the tensile strain is defined as the linear elastic tensile modulus E.

In oscillatory experiments, one measures at each frequency the tensile storage modulus (E′) and tensile loss modulus (E″), properties which are analogous to G′ and G″, defined earlier for shear. In fact, for a material that does not undergo volume changes during deformation, the dynamic tensile moduli are exactly three times larger than the corresponding dynamic shear moduli.

Extensional Flow Rheometer

The value of the extensional viscosity μ_{ex} is a measure of a liquid's resistance to stretching during flow. For commercial thermoplastics, the value of μ_{ex} is important in plastics-forming operations such as fiber spinning and blown-film extrusion.

Figure 8.53i shows an idealized representation of uniaxial extensional flow. Here, the cylinder of liquid is stretching along its longitudinal axis while contracting in the radial dimension so that the volume remains constant. To obtain a constant extension rate, the stretching force F is adjusted in

© 2003 by Béla Lipták

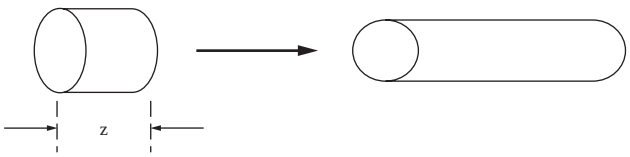

FIG. 8.53i
Uniaxial extensional flow.

such a way that the length z of the liquid cylinder increases exponentially with time t.

$$z \propto \exp(\varepsilon t) \qquad \textbf{8.53(10)}$$

Here, ε is the rate of extension, analogous to the rate of strain κ in shear flow. The stretching force F and the cylinder cross-sectional area A are both functions of time. The extensional viscosity μ_{ex} is a material property defined as

$$\mu_{ex} = F/(A\,\varepsilon) \qquad \textbf{8.53(11)}$$

Thus, for a given rate of elongation ε, the necessary stretching force increases with the elongational viscosity of the liquid μ_{ex}. Two thermoplastic samples may have identical shear viscosity curves (μ vs. κ) and completely different extensional viscosity curves (μ_{ex} vs. ε).

For some thermoplastics, the measured value of μ_{ex} calculated with Equation 8.53(11) never reaches a steady value, even though the extension rate is constant. There is little doubt that μ_{ex} is a key property for polymer processing flows that has been comparatively neglected in rheometry.

Extensional Viscosity Detectors Rheometers that have been built for measuring the extensional viscosity have used different techniques. These included the capillary breakup, rotary clamp stretching, stagnation point flow, and opposing jets techniques. However, it has proven difficult to build a robust and accurate extensional flow rheometer for industrial use.

Between 1987 and 1990, the International Committee on Rheology organized a round-robin test of extensional flow rheometers. In this test, the value of μ_{ex} was measured for an international standard fluid in various laboratories around the world. The test results were disappointing, with values measured in different laboratories varying by as much as several orders of magnitude. More recently, the filament stretching technique has found favor among academic laboratories for measurements of the extensional viscosity.

Capillary Rheometers

The capillary rheometer is used to study the pressure-driven flow of a molten thermoplastic through a capillary. The viscosity of the process sample can be calculated from measurements of volumetric flow rate vs. pressure drop along the capillary axis. Ordinarily, capillary rheometers are used only to calculate the viscosity, hence, these devices are covered under the discussion of industrial viscometers (Section 8.64).

However, it is possible to use capillary rheometry to measure N_1 as well as the viscosity. This can be done by varying the length of the capillary (at fixed diameter) and noting the effect on the pressure drop within the entrance region of the capillary.

CONCLUSIONS

Molten thermoplastics have several elastic properties in addition to the viscosity that can be measured by using rheometers. True material properties can be measured only if the rheometer subjects the sample to a controlled velocity field or to a controlled deformation. Hence, the popular melt flow indexer, while useful, cannot be used to measure a true material property such as viscosity.

Probably the most significant future innovation will be the development of an on-line process rheometer for use in controlling polymer-processing operations. Currently, there is no commercial rheometer that can be used to continuously measure the true elastic properties of a thermoplastic during extrusion.

Bibliography

Baird, D. G. and Collias, D. I., *Polymer Processing Principles and Design*, John Wiley & Sons, New York, 1998.

Bird, R. B., Armstrong, R. C., and Hassager, O., *Dynamics of Polymeric Liquids*, Vol. 1, 2nd ed., John Wiley & Sons, New York, 1987.

Dealy, J. M. and Broadhead, T. O., Chapter 10 in *Techniques in Rheological Measurement*, Collyer, A. A., Ed., Chapman & Hall, Boca Raton, FL, 1993.

Dealy, J. M. and Wissbrun, K. F., *Melt Rheology and its Role in Plastics Processing*, Van Nostrand Reinhold, New York, 1990.

Ferry, J. D., *Viscoelastic Properties of Polymers*, 3rd ed., John Wiley & Sons, New York, 1980.

Macosko, C. W., *Rheology: Principles, Measurements, and Applications*, Wiley-VCH, New York, 1994.

© 2003 by Béla Lipták

8.54 Streaming Current or Particle Charge Analyzer

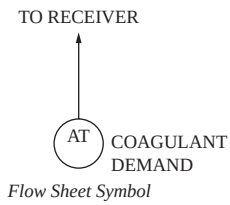

Flow Sheet Symbol

W. F. GERDES (1974, 1982) **B. G. LIPTÁK** (1995, 2003)

Applications:	Batch operations, titration, and continuous monitoring; can control the clarification of beverages, dewatering, thickening of suspensions, addition of coagulant chemicals, and treatment demand by measuring the surface charge on particles
Materials of Construction:	Stainless steel, silver, and Teflon®
Sample Size Required:	About 10 cc
Approximate Cost:	$10,000 to $15,000
Partial List of Suppliers:	Automated Aquarium Systems (www.automatedaquariums.com) Colloidal Dynamics (www.colloidal-dynamics.com) Dispersion Technology (www.dispersion.com) Honeywell Inc. (www.honeywell.com) Komline-Sanderson (www.komline.com) Matec Instrument Co. (www.matec.com) Mutek GmbH (www.mutek.com) Panametrics (www.panametrics.com) Particle Sizing Systems (www.pssnicomp.com/)

INTRODUCTION

The accurate measurement of surface charges on the suspended particles is important when studying the adsorption characteristics of colloidal suspensions. In water or waste treatment, the streaming current detector (SCD) can be used to estimate the amount of treatment required and to continuously control the addition of coagulation chemicals by detecting the surface charge on particles.

Less directly, SCD can compare the ability of alternative treating chemicals to influence the electric charge of particles, and it can determine the effect of pH on a chemical's ability to promote or enhance coagulation. The most effective use of chemicals requires a recognition of the role of electrical charges in stabilizing suspensions.[1]

OPERATING PRINCIPLES

In ionic liquids, any interface with a solid or a second liquid will have an electrical charge that is caused by the preferential adsorption or positioning of ions. The liquid adjacent to the interface surface will contain excess charges of the opposite sign, called counter-ions.

If charged particles are attached to a filter or capillary wall, these counter-ions can be swept downstream by a stream of water. This flow of charges of predominantly one sign constitutes a current called the *streaming current.* In the case of an insulating capillary, the return path is by ionic conduction through the liquid in the stream. With suitable electrodes, the return path can be arranged so as to measure this streaming current.

The Streaming Current

The van der Waals force causes particles that carry high charges to be preferentially adsorbed to the surfaces of a cylinder and piston as shown in Figure 8.54a. When such a particle is moved upward by the piston movement, its counter-ions are sheared off as the fluid moves in the opposite direction relative to the piston. The totality of these ions is the streaming potential detected by this analyzer.

Because the energy level of the streaming current is small as compared to the random signals from electrodes and from inadvertent thermocouples, it is advantageous to develop a reversing or alternating signal. This signal of known frequency can be more readily distinguished from noise that occurs at other frequencies.

Determination of polarity of the charge is by phase-sensitive rectification through the action of a switch that is synchronized with the instantaneous flow of the liquid. This alternating design permits a pump and capillary to be combined into a single unit with a loosely fitted piston reciprocating

© 2003 by Béla Lipták

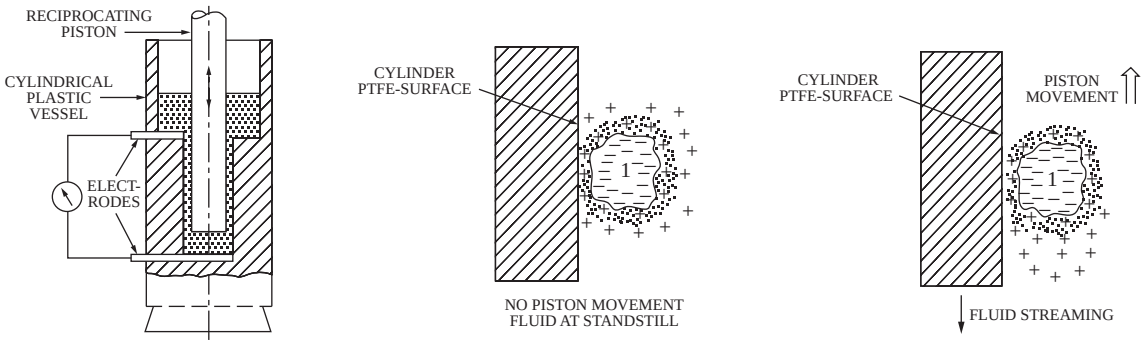

FIG. 8.54a
In the boundary of the diffuse layer, at the cylinder surface, a cloud of counterions is sheared off by the streaming fluid. (Courtesy of Müted GmbH.)

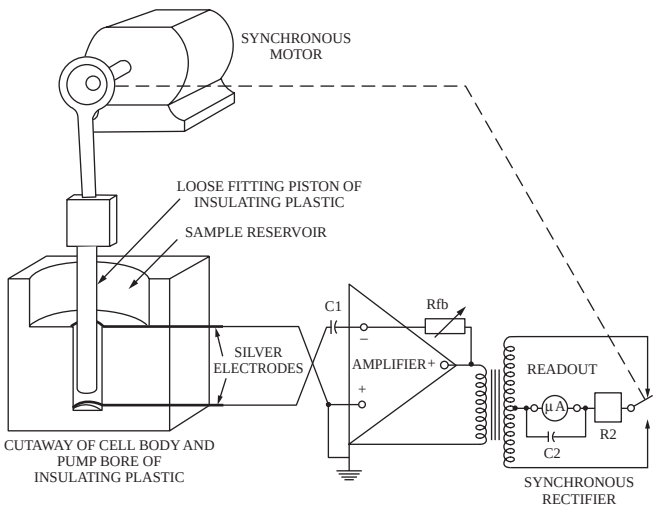

FIG. 8.54b
Streaming current detector.

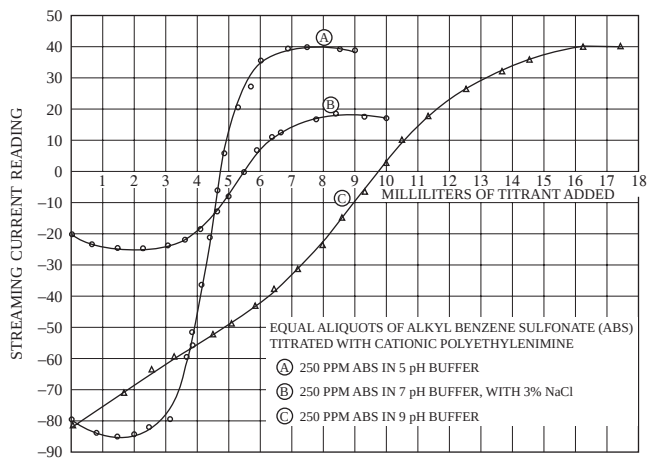

FIG. 8.54c
Titration curves indicating effect of pH and salt on SCD reading.

in a dead-ended bore (Figure 8.54b). Cleaning is easy, because the piston and bore can be separated by disassembly.

CALIBRATION

Although readout is in arbitrary units, reproducibility can be demonstrated by standard samples. Sensitivity is constant, but zero shift can occur as a result of inadequate cleaning or the use of strong surface-active agents. Unfortunately, there is no absolute zero standard. Colloidal suspensions are useless as routine standards, because they become unstable with time. Suspensions made stable by excess surface-active materials leave a stubborn residue on the SCD.

Often, the most useful standards are two buffer solutions chosen so that their pHs are on either side of the isoelectric point of the capillary material. The isoelectric point is defined as the pH at which the material exhibits zero charge. Upscale or downscale shifts of buffer readings will indicate the bias of the instrument caused by contamination of the surfaces. Buffers near pH 4 and 5 are useful.

Dielectric constant, pH, and total ionic content all exert legitimate influences on the streaming current reading. Lowering the pH of a sample shifts its SCD reading upscale, and increasing the salt content by adding a balanced, neutral salt shifts the reading toward zero (Figure 8.54c).

APPLICATIONS

Most applications involve either titration of the sample or prior treatment in the plant, because a single reading on untreated material provides little information. This is because SCD readings are almost independent of the concentration of suspended solids. Titration can be performed with as little sample as will submerge the active part of the instrument.

Treatment Chemical Selection

To estimate the amount of treatment that a process liquid requires, a volumetric sample is titrated with the chemical that is intended for use for treatment at a known concentration until a zero signal is obtained. To compare alternative treating chemicals, identical samples can be titrated with the various chemicals.

© 2003 by Béla Lipták

When it is desired to study the effect of a change in pH on treating requirements, identical samples are titrated at various pH levels. The pH effect can be significant, because the tolerance of chemicals can be considerably different at low or high pH values.

In the usual treatment plant, the SCD may continuously control the feed of cationic chemicals. The need for changing the charging rate of the chemical additives arises from variations in the flow rate of the process fluid, changes in the loading of suspended solids in the process fluid, variations in the unit demand of the solids, or any combination of these factors.

The main advantage of SCD control is its fast response to changes in the operating conditions. Charge neutralization occurs almost as soon as the treating chemical is dispersed in the stream; therefore, samples may be taken 1 or 2 min after addition of the chemical.

Sampling

If batch samples are used, they should be large enough to permit rinsing the SCD apparatus several times. Skimming or decanting can be used to remove sand, larger solid particles, and oil globules. Little information is lost by the removal of larger particles, because charge is a surface phenomenon, and the fines provide most of the surface.

When a continuous sample is required, a self-cleaning bypass filter should be used (see Figure 8.54d). Periodic backflushing or cleaning of the sampling line is also recommended.

Control System

For continuous control, the SCD measurement signal is fed to a two-mode controller that modulates the chemical feed pump or control valve (Figure 8.54e). The transmitter signal

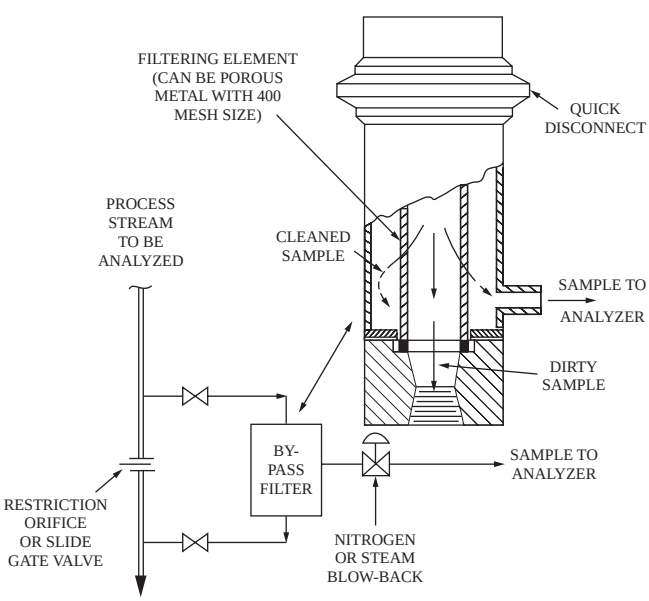

FIG. 8.54d
Self-cleaning bypass filter design and installation.

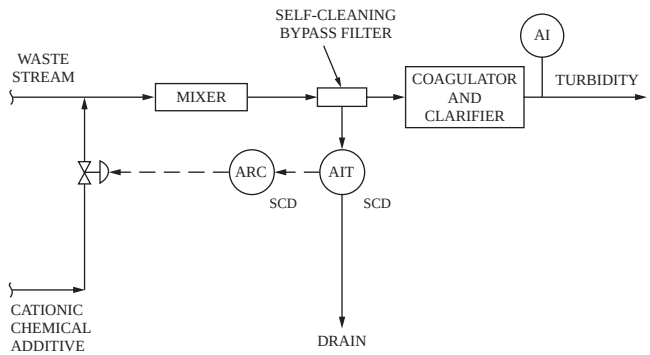

FIG. 8.54e
Chemical addition control utilizing a streaming current detector.

can be sent through a 0.1 to 0.2 minute filter to remove noise. The two-mode feedback controller itself is usually set for a PB = 500% and I = 2 repeats/min.

The maximum and minimum opening of the additive control valve can be limited so that a loss of sample will not cause an open loop. In the old pneumatic systems, pressure regulators provided the limits for valve openings, but today they are electronic.

The SCD controller set point determination is based on the turbidity measurement downstream of the coagulation equipment. If automatic cascade control is preferred, the set point of the SCD controller can be directly adjusted by this turbidity controller in a cascade arrangement. In some processes, more than one chemical additive is involved, so a sequence of additions and attendant interactions must be considered in the control configuration.

CONCLUSIONS

The streaming current detector (SCD) is only one of the methods available for characterizing concentrated colloids. Another method is based on the electroacoustic effect,[2–5] which is claimed to be more efficient.

References

1. Riddick, T. M., Role of the zeta potential in coagulation involving hydrous oxides, *TAPPI*, 47.
2. Dukhin, A. S., Shilov, V. N, Ohshima, H., and Goetz, P. J., Electroacoustics phenomena in concentrated dispersions, new theory and CVI experiment, *Langmuir*, 15(20), 6692–6706, 1999.
3. Ohshima, H. and Dukhin, A. S., Colloid vibration potential in a concentrated suspension of spherical colloidal particles, *J. Coll. Interface Sci.*, 212, 449–452, 1999.
4. Takeda, S. and Goetz, P. J., Dispersion/flocculated size characterization of alumina particles in highly concentrated slurries by ultrasound attenuation spectroscopy, *Colloids and Surfaces*, 143, 35–39, 1998.
5. Dukhin, A. S. and Goetz, P. J., Acoustic spectroscopy for concentrated polydisperse colloids with high density contrast, *Langmuir*, 12(21), 4987–4997, 1996.

© 2003 by Béla Lipták

Bibliography

Adams, V., *Water and Wastewater Examination Manual*, Lewis Publishers, Boca Raton, FL, 1990.

Delgado, A. V., *Interfacial Electrokinetics and Electrophoresis*, Marcel Dekker, New York, 2001.

Gerdes, W. F., A new instrument, the streaming current detector, *Instrum. Technol.*, 13, 12, 1966.

Hunt, D. and Wilson, A., *The Chemical Analysis of Water,* RSC/CRC Press, Boca Raton, FL, 1986.

Hunter, R., *Zeta Potential in Colloidal Science*, Academic Press, New York, 1981.

Instrumentation and Automation Experiences in Wastewater Treatment Facilities, EPA-600/2–76–198, Environmental Protection Agency, Washington, D.C., October 1976.

Karasek, F. W., Detection limits in instrumental analysis, *Res. Dev.*, October 1979.

© 2003 by Béla Lipták

8.55 Sulfur-in-Oil Analyzers

D. H. F. LIU (1995) **B. G. LIPTÁK** (2003)

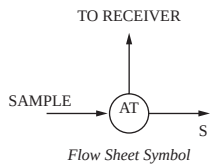

Flow Sheet Symbol

Type of Sample:	Crude and fuel oils, diesel, gasoline, middle distillates, kerosene, gas oil, jet fuel, and lubricating oils
Method of Analysis:	A. X-ray absorption B. X-ray fluorescence C. Pulsed UV D. Purged spectrometer
Range:	A. 0–0.5 to 0–5% sulfur; 0.6 to 1 g/ml density B. Lower detection limit is 50 ppm C. Down to 1 ppm w/w sulfur in diesel, gasoline, kerosene, and jet fuel D. 40 ppm to 5%
Inaccuracy:	A. 0.5% of full scale or 0.005 wt% S B. 15 ppm at a concentration of 300 ppm C. Repeatability at 1 ppm is ±0.02 ppm D. 3% of concentration
Sensitivity:	A. 0.5% of full scale or 0.0005 g/cm^3
Cost:	A, B. $40,000 to $80,000 C. $55,000 to $65,000 D. About $75,000
Partial List of Suppliers:	Berthold Technologies (www.berthold.com.au) Horiba (www.horibalab.com) ISL (www.isl-france.com) Rigaku MSC (www.msc.com) Shimadzu Corp. (www.shimadzu.com) Spectronex (www.spectronex.com) Spectro Inc. (D) (www.spectroinc.com) Thermo Onix (C) (www.thermo.com) Yokogawa Corp. (A, B) (www.yokogawa.com/)

INTRODUCTION

On-line analysis of sulfur in oil products is imperative, because environmental authorities are tightening the limits on sulfur levels in petroleum products. Limitations of 300 ppm in blended gasoline and 500 ppm in diesel are not uncommon. Even with an excellent hydrotreating capability, these limits are often difficult to meet, so processing must be carefully monitored. The timely information provided by continuous on-line monitoring is necessary to consistently meet sulfur content limits, especially when blending the various product or feed streams.

X-RAY ABSORPTION ANALYZER

The x-ray absorption technique has been used for many years, in the laboratory and on line, to measure total sulfur content in liquid petroleum products. The intensity of x-rays, after they pass through a liquid hydrocarbon sample, depends on the density and elemental composition of that sample.

For x-ray radiation in the region of 10 to 20 KeV, sulfur has a much greater mass absorption coefficient than does carbon and hydrogen. At 20 KeV, the mass absorption coefficients of carbon and hydrogen are about equal, so that changes in x-ray absorption due to C:H ratio are negligible.

© 2003 by Béla Lipták

Therefore, the changes in x-ray absorption depend mostly on sample density and sulfur content. The ionization current (Is) can be expressed as

$$Is = Io \cdot \exp[-\rho t\{(\mu_5 - \mu_{CH}) \cdot C_5 + \mu_{CH}\}] \qquad \textbf{8.55(1)}$$

where

ρ = density of liquid to be measured (in g/cm^3)
t = effective length of the liquid cell (in cm)
μ_5 = mass absorption coefficient of sulfur (in cm^2/g)
μ_{CH} = mass absorption coefficient of carbon and hydrogen (in cm^2/g)
C_S = sulfur concentration ratio by weight

Method of Operation

Figure 8.51a illustrates the operation of an x-ray absorption type sulfur-in-oil analyzer. The x-rays emitted from an americium-241 source bombard a target, producing secondary x-rays at 20 KeV. These penetrate a beryllium 5 mm thick back-plate and a thin Teflon® plate, pass through the sample cell, and enter the ionization chamber.

The current from the ionization chamber detector is the input to the sulfur converter. This input is compared with the zero set signal from a standard current source. The difference between these signal currents is the input to the picodiode electrometer, where the differential current is amplified to provide an output signal to the *S-set* sulfur converter unit.

At the S-set unit, the signal is linearized, compensated for density at the zero point by the signal from the density converter, and converted to a voltage signal that is proportional to the sulfur concentration and density. After span adjustment, the signal is transmitted to the divider unit. This unit divides the sulfur concentration signal from the S-set unit by the density signal (calibrated at the sample temperature of the sulfur detector). The divider unit produces a 4 to 20 mA DC output signal proportional to total sulfur content.

The most sensitive range of the system is 0 to 0.5 wt% sulfur, with a repeatability of 0.01 wt%. The density measurement has a sensitivity of 0.0005 g/cm^3.

Figure 8.55b shows a block diagram of the measurement electronics and describes the components of the three separate parts—the density measurement system, the hydrogen content measurement system, and the sulfur measurement system.

X-RAY FLUORESCENCE

X-ray fluorescence (XRF) measurement of sulfur in oil is recognized as an ASTM laboratory procedure. An on-line XRF analyzer system has three main component blocks: sampling, analysis, and control. In these units, a continuous stream of process sample passes through a flow cell with Be-coated window. The coating maximizes both the life and the x-ray transmission of the window. The sample is excited by a low-level radiation source that causes the sulfur atoms to emit their characteristic fluorescent x-rays. The x-ray intensity is measured by a high-resolution proportional counter-detector over a period of time, and the resultant data are processed by a microprocessor to yield the average total sulfur content in the stream.

The assays are updated every 2 to 10 min, depending on the analysis precision desired. Precision is typically 15 ppm at 300 ppm concentration, and the lower detection limit of this sensor is 50 ppm.

PULSED UV FLUORESCENCE

The pulsed ultraviolet fluorescence (PUVF) type of total sulfur analyzer takes a liquid sample and vaporizes it before measuring the sulfur contents. The package, shown in Figure 8.55c, includes the main components of a sample injection valve, carrier gas flow control system, mixing chamber, combustion chamber, and detector subassembly.

The sample injection valve periodically transfers a small amount of sample liquid (approximately 1.0 μl) into an air carrier gas. The air/sample mixture passes through the mixing chamber to ensure complete mixing and then flows to the combustion chamber, where all sample components are combusted into SO_2, CO_2, and H_2O at about 1100°C. The PUVF detector accurately measures the amount of SO_2 produced during combustion of the sample.

The operation of the pulsed UV fluorescence analyzer takes advantage of the fact that SO_2 molecules absorb ultraviolet (UV) light and become excited at one wavelength, then decay to a lower energy state, while emitting UV light at a different wavelength. Specifically,

$$SO_2 + hv_1 \rightarrow SO_2^* \rightarrow SO_2 + hv_2 \qquad \textbf{8.55(2)}$$

The sample flows into the fluorescence chamber, where pulsating UV light excites the SO_2 molecules. The condensing lens focuses the pulsating UV light into a mirror assembly, which contains four selective mirrors that reflect only the wavelengths that excite SO_2 molecules.

As the excited SO_2 molecules decay to their lower energy states, they emit UV light that is proportional to the SO_2 concentration. The bandpass filter allows only the wavelengths emitted by the excited SO_2 molecules to reach the photomultiplier tube (PMT), which detects the UV light emission from the decaying SO_2 molecules. The photodetector, located at the back of the fluorescence chamber, continuously monitors the pulsating UV light source and is connected to a circuit that compensates for fluctuations in the intensity of the UV light.

This analyzer, on a weight basis, measures down to 1 ppm sulfur in diesel, gasoline, kerosene, and jet fuel. It has a repeatability of ±0.02 ppm (2 sigma RSD = 0.25%) making its sensitivity highly suitable for critical process control applications. Such applications might include the measurement of the sulfur content of hydrocarbon products and controlling the fuel blending process.

© 2003 by Béla Lipták

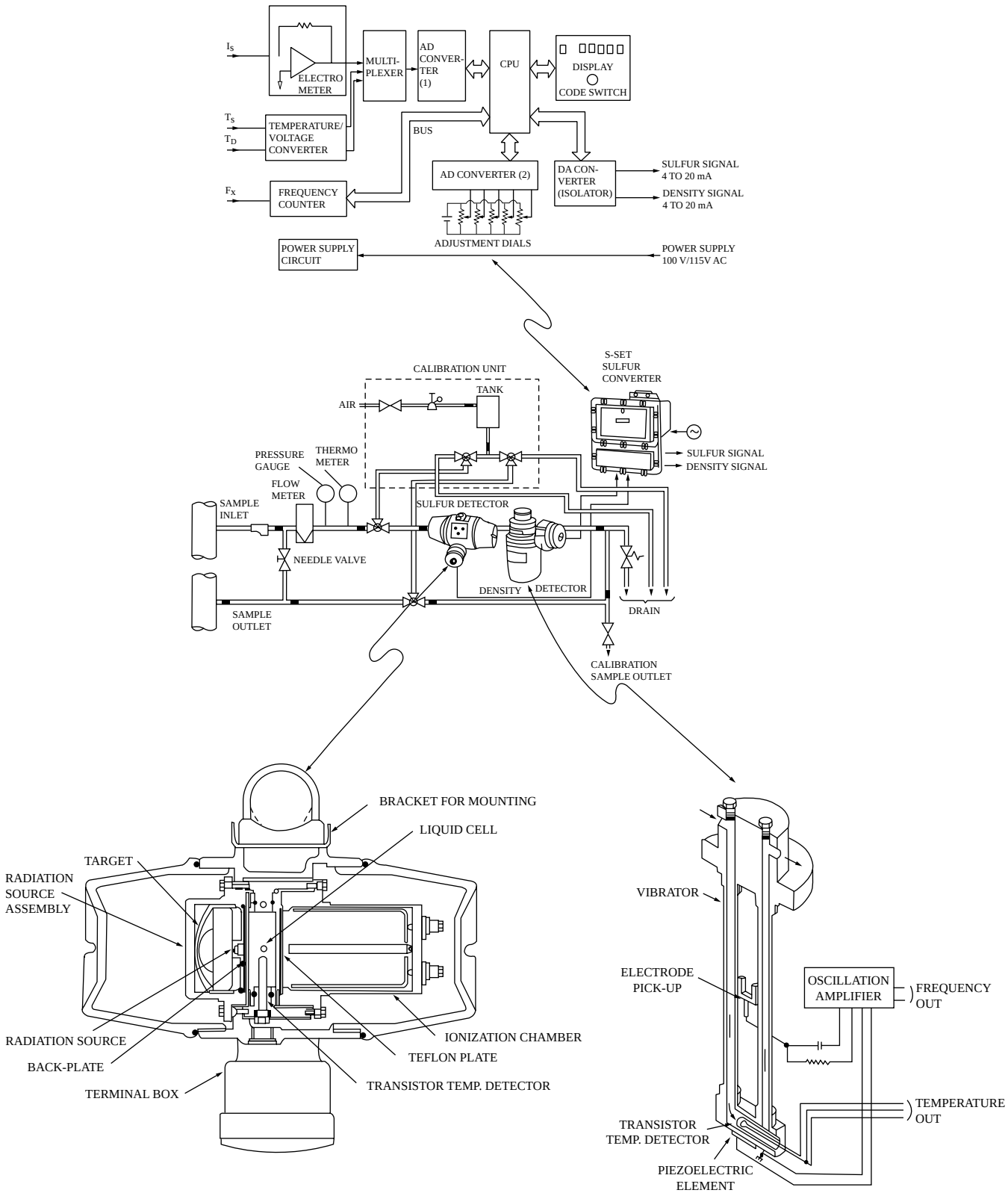

FIG. 8.55a

X-ray absorption type sulfur-in-oil analyzer. (Courtesy of Yokogawa.)

© 2003 by Béla Lipták

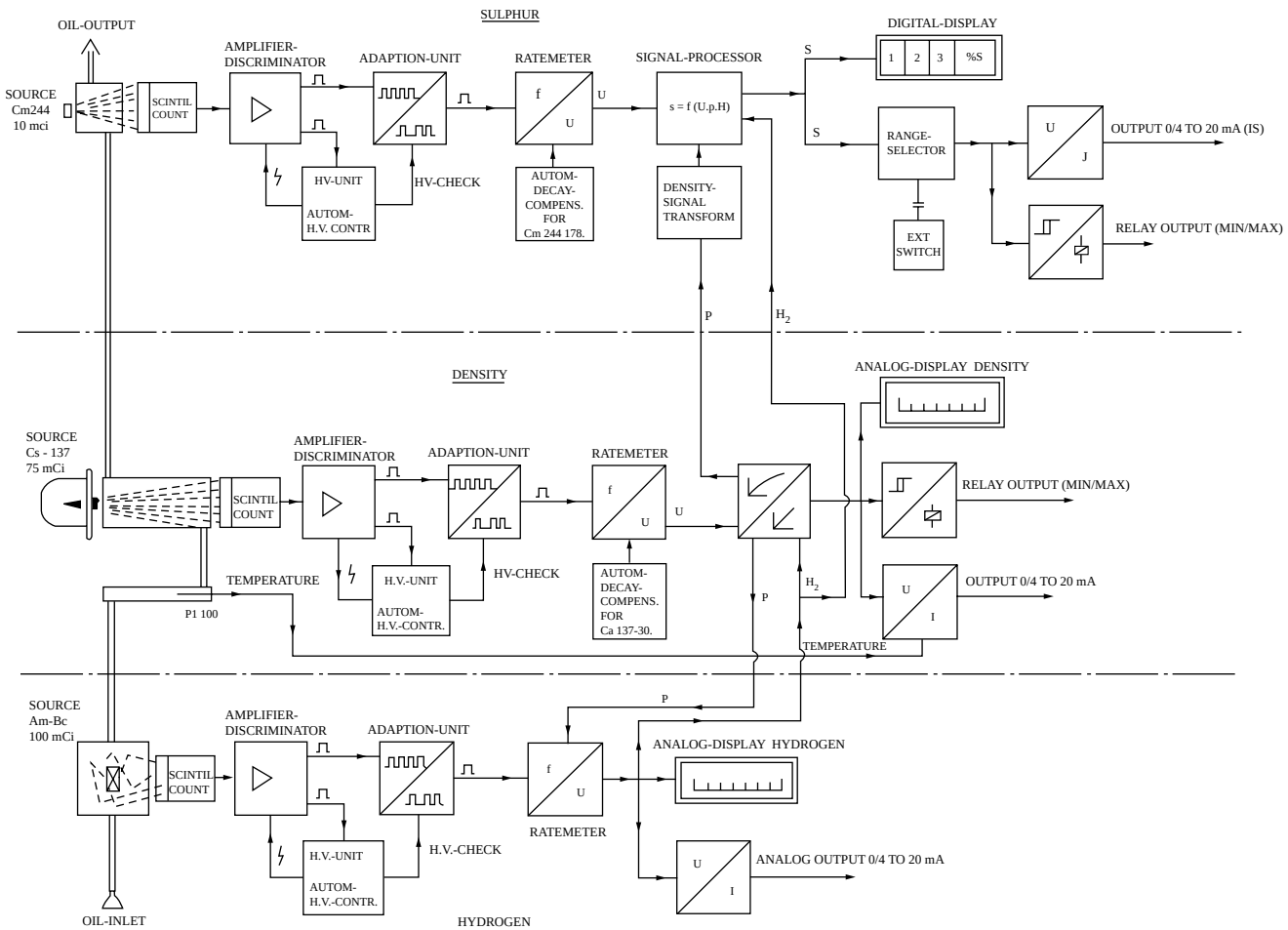

FIG. 8.55b

Block diagram of the measurement electronics for three separate measurements: density, hydrogen content, and sulfur content.



FIG. 8.55c

On-line total sulfur analyzer for gasoline, diesel, kerosene, jet fuel, or gas oil applications. (Courtesy of ThermoOnix.)

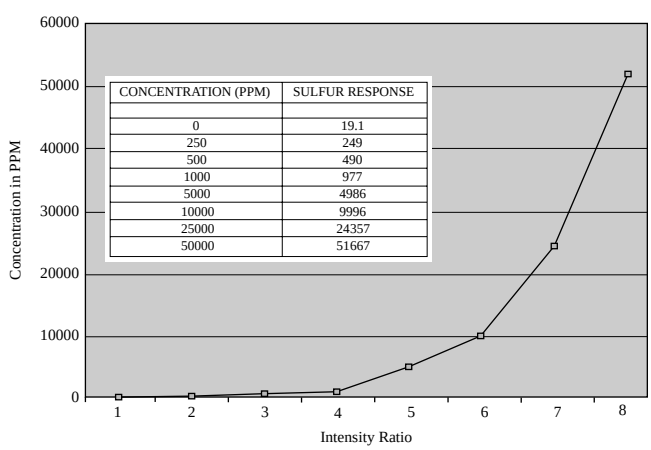

CONCENTRATION (PPM)	SULFUR RESPONSE
0	19.1
250	249
500	490
1000	977
5000	4986
10000	9996
25000	24357
50000	51667

FIG. 8.55d

Calibration curve for a fuel analysis spectrometer, which is provided with optics for sulfur measurement. (Courtesy of Spectro Inc.)

© 2003 by Béla Lipták

FUEL ANALYSIS SPECTROMETER

To use fuel analysis spectrometers for on-site sulfur analysis, it is necessary to prevent the atmospheric oxygen from absorbing the sulfur. This is achieved by the use of nitrogen or argon purged optics. Such units can be useful in measuring the sulfur content of gas turbine fuels or of lubricating oils.

Because of the small size of the optics, the purge gas consumption is small, <3 l/min. The minimum detectable sulfur concentration is 40 ppm, and the maximum of the calibrated range is 5% (50,000 ppm). Figure 8.55d illustrates a sulfur calibration curve. The intensity ratio shown on that curve is the ratio between the outputs of the measuring and reference photomultiplier tubes. The reference used is the carbon sensitive wavelength (193.05 nm), while sulfur is measured at 180.73 nm. The measurement error is usually <3% over the calibrated range.

Bibliography

Clevett, K. S., *Process Analyzer Technology,* John Wiley & Sons, New York, 1986, 314–321.

Greyson, J. C., *Carbon, Nitrogen and Sulfur Pollutants,* Marcel Decker, New York, 1990.

Hidy, G. M., *Atmospheric Sulfur,* Academic Press, New York, 1994.

Ramanujan, R. S. and Fitzgibbon, P., X-ray fluorescence for on-line elemental analysis, *Control,* March 1990.

© 2003 by Béla Lipták

8.56 Sulfur Oxide Analyzers

R. A. HERRICK (1974, 1982) **B. G. LIPTÁK** (1995, 2003)

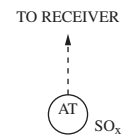

Flow Sheet Symbol

Methods of Detection:
A. Colorimetric
B. Conductimetric
C. Correlation spectrometry
D. Coulometric
E. Electrochemical
F. Flame photometric
G. Infrared
H. Thermal conductivity
I. Ultraviolet
J. Chromatographic

Applications: Types A, B, D, E, F, and H are mostly for ambient air monitoring (see Section 8.5 for details), whereas types C, G, and I are for stack gas monitoring (see Sections 8.3 and 8.46).

Reference Method: A. Pararosaniline; an EPA study (CPA 70–101) found coulometry to be equivalent to this reference method.

Sample Pressure: Where sampling is involved, the sample pressure is usually near atmospheric.

Sample Temperature: In ambient air analysis, types A, B, D, E, F, and H are generally limited to about 120°F (49°C). Stack gas monitors (C, G, and I) are not so limited, as they usually are not in direct contact with the sample but are protected by air cooling.

Sample Flow Rate: Usually between 0.1 and 1.0 ACFM (2.8 to 28 alpm)

Materials of Construction: Because of the reactivity of sulfur oxide gases, glass, Teflon®, and stainless steel are preferred; PVC should be avoided.

Speed of Response: Types C, E, F, G, and I are nearly instantaneous; types A, B, and D depend on the liquid capacity of the automated wet-chemistry system.

Ranges: Concentration in ambient air should stay below 0.1 ppm in the short range and below 0.02 ppm in the long range; therefore, the sensor range should not exceed 0 to 1 ppm. Stack monitors require 0 to 1000 ppm ranges.
A, B, D, and F. From 0.01 to 5 ppm, but with dilution systems can measure up to 5000 ppm
E. 0 to 15 ppm
C, G, and I. From 0 to 100 ppm up to 0 to 100%, but most applications are from 500 to 10,000 ppm (type C can detect down to 5 ppm)
H. 0 to 20%

Inaccuracy: Generally, 1 to 3% of full scale; types G and I can have errors as low as 0.5% of full scale. In ambient air measurement, the absolute limit on precision is 0.005 ppm.

Costs: Pocket-sized personal monitors start at $500. Ultraviolet laboratory spectrometers cost from $2500 to $5000. Portable ambient monitors for multiple gas detection cost $4000 to $7000, and permanently installed ambient air quality monitors configured for multiple-sample or multiple-gas monitoring is $10,000 to $20,000.

Stack gas monitor costs range from $25,000 to $35,000, depending on materials of construction, accessories, and number of components analyzed, which can include opacity. Passive, remote-sensing correlation spectrometers start at $35,000.

© 2003 by Béla Lipták

Thermal conductivity analyzers cost about $10,000. Installed chromatographs cost about $100,000.

Partial List of Suppliers:

For other analyzer suppliers, refer to Section 8.12 for chromatographic, Section 8.15 for colorimetric, Section 8.17 for conductimetric, Section 8.40 for correlation spectrometry, Section 8.49 for flame photometry, and Section 8.61 for ultraviolet.

ABB Process Analytics-Bomem (G) (www.abb.com\analytical)
Ametek Thermox (G, I) (www.thermox.com)
Anarad (G) (www.anarad.com)
Anatel (G, I) (www.anatel.com)
Bran and Luebbe, Inc. (G) (www.branluebbe.com)
Bruel & Kjaer (G) (kbinfo@spectristech.com)
Capital Controls (E) (www.capitalcontrols.com)
CEA (G) (ceainstr@aol.com)
Cole-Parmer Instrument Co. (D, E) (www.coleparmer.com)
Foxboro (G) (www.foxboro.com)
General Monitors (www.generalmonitors.com)
Hach (A) (www.hach.com)
Hamilton Sundstrand (AIT division, Analect) (G) (AIT@HS.utc.com)
Horbia Instruments (G) (www.horiba.com)
Ionics (G, I) (www.ionics.com)
LI-Cor (G) (www.licor.com)
Midac (G) (www.Midac.com)
MKS Instruments (G) (mks@mksinst.com)
MSA Instruments (G) (www.msanet.com)
Ocean Optics (G) (www.oceanoptics.com)
Pollution Control Systems (G) (www.biotector.com)
Remspec Corp. (G) (www.remspec.com)
Rosemount Analytical Inc. (G, I) (www.processanalytic.com)
Sensidyne (G) (www.sensidyne.com)
Servomex (G, J) (www.servomex.com)
Shimadzu Corporation (G) (www.shimadzu.com)
Siemens Energy & Automation (G, I) (www.sea.siemens.com)
Sierra Monitor Corp. (D) (www.sierraimstruments.com)
Tekmar-Dohrmann (G) (www.tekmar.com)
Teledyne (G) (www.teledyne-ai.com)
Thermo Andersen (www.thermoandersen.com)
UIC Inc. (D) (www.uicinc.com)
Wilks Enterprise (G) (www.WilksIR.com)
Zellweger Analytics (G) (www.zelana.com/)

The most popular ambient analyzer suppliers are MSA, General Monitor, ABB, and Sensidyne. The most popular stack gas analyzer suppliers are Rosemount-Analytical, Ametek Thermox, Horiba, and Thermo Environmental.

INTRODUCTION

The predominant sulfur oxide in the atmosphere is sulfur dioxide (SO_2). Some sulfur trioxide (SO_3) is also formed in combustion processes, but it rapidly hydrolyzes to sulfuric acid, which is considered to be a particulate matter. Therefore, this section concentrates on the monitoring of sulfur dioxide. In the U.S., the ultimate air quality goals (secondary standards) for sulfur dioxide are 60 $\mu g/m^3$ (0.02 ppm) annual arithmetic average, 260 $\mu g/m^3$ (0.1 ppm) maximum 24-hr concentration not to be exceeded more than once a year.

Applications

The oxides of sulfur are measured both in ambient air, where their concentration is usually a small fraction of one ppm, and in stacks and other industrial emissions, where their concentrations are in hundreds of ppm (see Figure 8.56a). While the analyzers used for these two types of application do overlap, they are discussed separately here.

Industrial monitors are discussed first. The design and operation of the gas chromatograph are not repeated here, so the reader is referred to Section 8.12 for an in-depth description. Infrared,[1] thermal conductivity, and ultraviolet analyzers

© 2003 by Béla Lipták

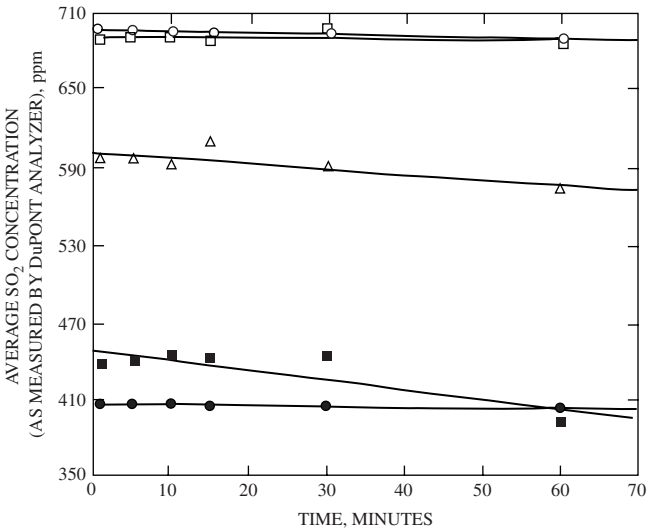

FIG.8.56a

Sulfur dioxide readings (on different dates) obtained by monitoring the stack of a power-generating boiler burning pulverized coal.[2]

will be discussed briefly, but in-depth coverage is provided in Sections 8.27, 8.57, and 8.61, respectively.

The monitoring of sulfur oxides in the ambient air will be discussed after the coverage of industrial analyzers. This discussion will also be brief, because ambient air monitoring is discussed in Section 8.5, and the electrochemical, colorimetric, conductimetric, and flame photometric methods of analysis are covered, respectively, in Sections 8.4, 8.15, 8.17, and 8.47.

INDUSTRIAL ANALYZERS

Stack Sampling

As discussed in some detail in Section 8.3, stack effluents contain orders of magnitude higher concentrations of sulfur dioxide than does ambient air. Consequently, few of the techniques used to detect the trace amounts of sulfur dioxide in ambient air are applicable to source monitoring, except after massive dilution.

The colorimetric procedure is not applicable to source monitoring at all, mainly because of the interference of nitrogen oxides. The electrochemical method can be used for source monitoring. Analyzers that are generally applicable to source monitoring include infrared (IR), ultraviolet (UV), and correlation spectrometry.

Nondispersive Infrared

Sulfur dioxide absorbs radiation over a broad range of wavelengths, which include both the infrared and ultraviolet regions of the spectrum. Section 8.27 describes the nondispersive infrared (NDIR) analyzers in some detail. Figure 8.56b shows one of their stack-mounted variations.

These devices are most often used in stack analyzer packages, where several stack gases and opacities are measured

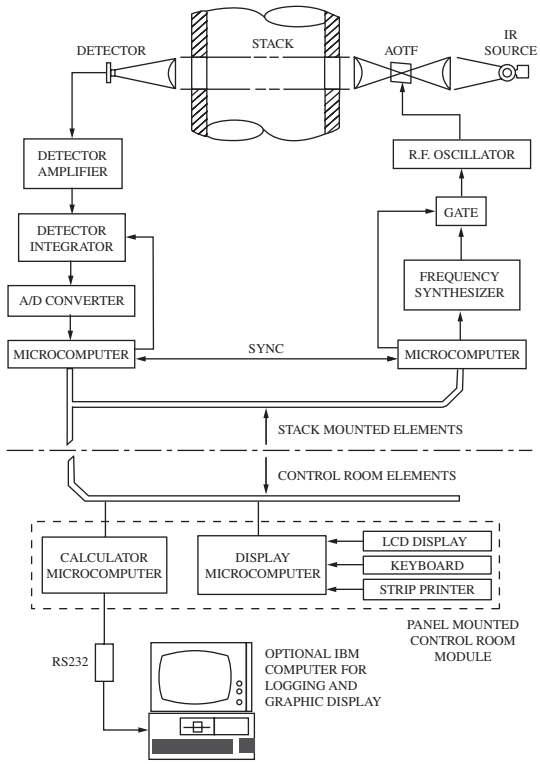

FIG. 8.56b

IR analyzer with solid state tunable crystal, which allows for the simultaneous measurement of many gases in the stack.[3]

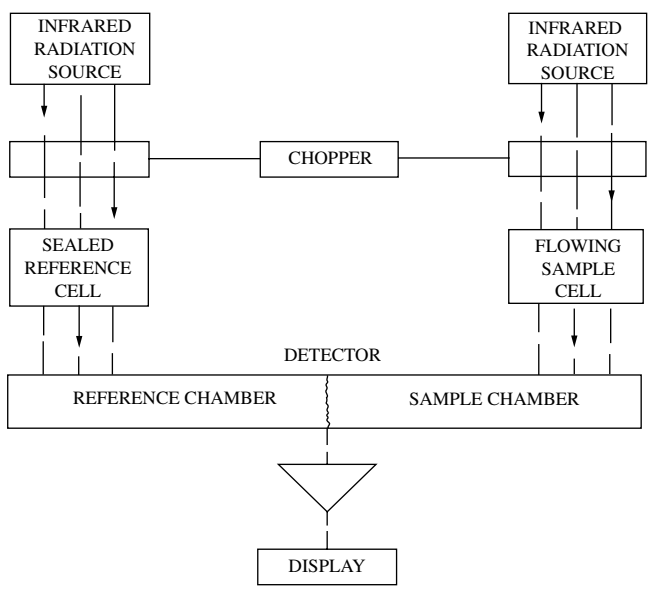

FIG. 8.56c

Nondispersive infrared analyzer.

together. The NDIR analyzer using a positive filtering scheme, illustrated in Figure 8.56c, is one of the design variations described in detail in Section 8.27.

© 2003 by Béla Lipták

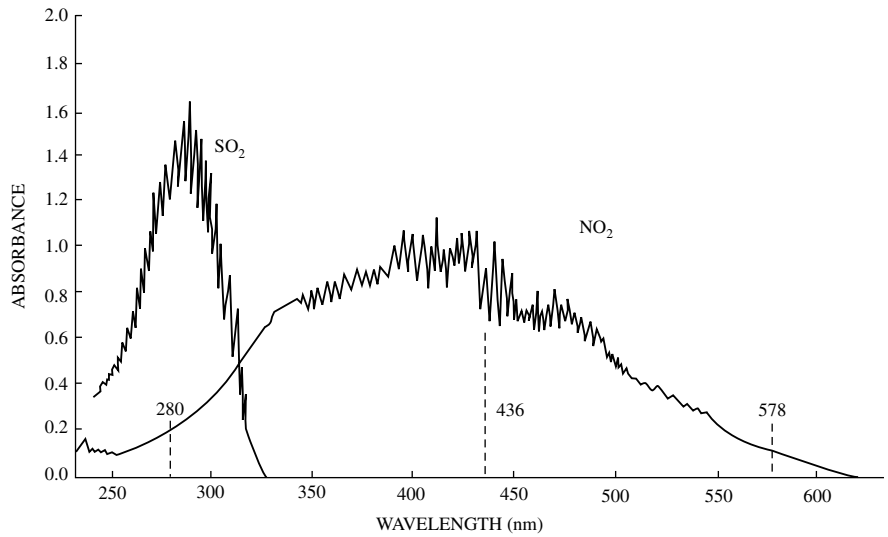

FIG. 8.56d
The absorbance of SO_2 and NO_2 in the ultraviolet range.

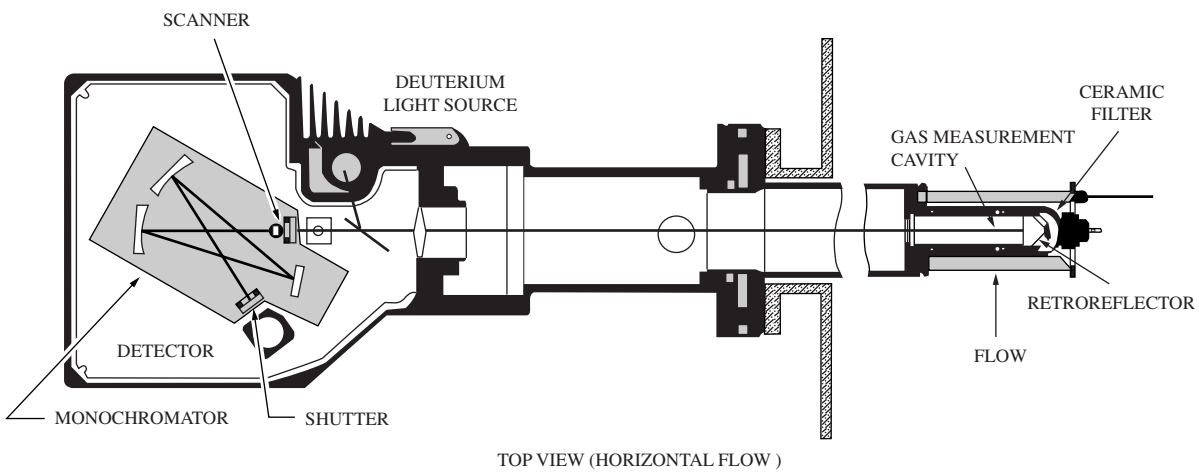

FIG. 8.56e
Self-calibrating, self-cleaning, self-drying probe-type analyzer that simultaneously detects the concentrations of SO_2 and NO_2 at temperatures up to 800°F.

Ultraviolet

The absorbance of SO_2 in the ultraviolet range is shown in Figure 8.56d. Because, in most stack-monitoring applications, there is an interest in measuring the concentrations of both NO_x and SO_2, some suppliers of ultraviolet analyzers offer a single analyzer for the simultaneous monitoring of both gases (Figure 8.37b).

Figure 8.56e illustrates a self-cleaning, self-calibrating, microprocessor-operated probe design, capable of measuring both NO and SO_2 simultaneously. Ultraviolet analyzers are discussed in detail in Section 8.61. They are frequently used on sulfur dioxide applications. When the analyzer is not inserted into the process, but samples are taken from the process into the analyzer, the sample gases must be filtered before they reach the detector cell (sample chamber) to prevent a buildup of particulates in the cell. Similarly, the moisture content of the sample must also be controlled to prevent condensation.

Correlation Spectrometry

As discussed in detail in Section 8.40, the correlation spectrometer can be used at a location remote from the source to determine the sulfur dioxide content of stack gases. The instrument shown in Figure 8.56f is specific for SO_2 because of the photographic optical mask of the SO_2 spectrum.

In use, the natural background level of ultraviolet radiation is used to zero the instrument. When the optics are pointed across a stack plume containing sulfur dioxide, the resulting change in the ultraviolet radiation in the wavelength pattern of SO_2 is detected at the instrument. If the stack plume

© 2003 by Béla Lipták

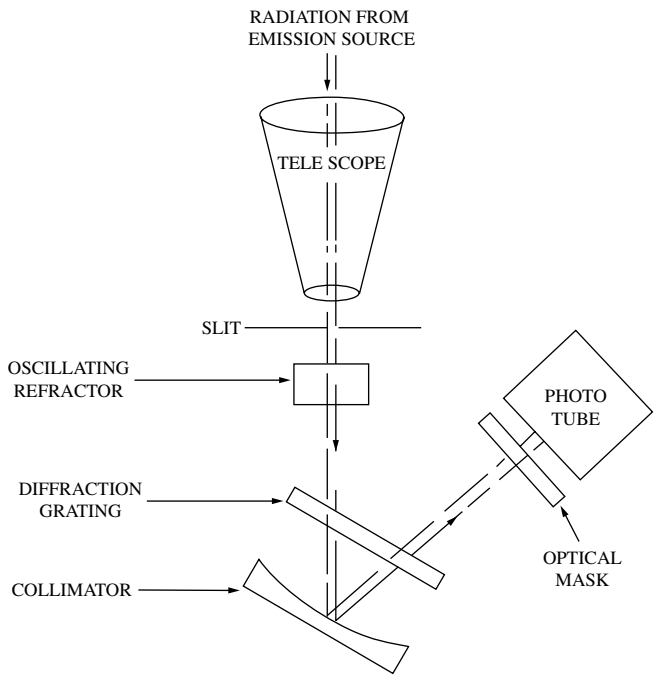

FIG. 8.56f
Remote sensing correlation spectrometer.

diameter and stack gas density are both known, the sulfur dioxide concentration can be determined.

Thermal Conductivity

Thermal conductivity analyzers are discussed in Section (8.57) and therefore will be described only briefly here.

If the thermal conductivity of air is taken as 1.0, the thermal conductivity of SO_2 is 0.344. This difference is substantial enough to allow the measurement of sulfur dioxide in air at higher concentrations. The minimum range of these detectors is about 0 to 3% SO_2 in air and 0 to 1% air in SO_2 full scale. Thermal conductivity analyzers can also be used for measuring sulfur dioxide in nitrogen.

AMBIENT-AIR ANALYZERS

The measurement of sulfur dioxide in air has been performed for many years because of the simplicity of manual analysis based on the ability of sulfur dioxide to reduce a starch-iodine solution. The earliest sulfur dioxide detectors were automated wet chemical devices that measured the increase in the conductivity of a solution after air had been intimately mixed in it by some contacting procedure.

The U.S. Environmental Protection Agency (EPA) has deleted conductivity-type analyses from their approved list of ambient air sampling instruments, because this technique is nonspecific for SO_2 but measures all acid gases. The EPA has designated the colorimetric technique using pararosaniline as the reference procedure, with flame photometric and coulometric detection as acceptable alternative procedures.[4]

Ambient-Air Sampling

In the United States, the ultimate air quality goals (secondary standards) for sulfur dioxide are 60 $\mu g/m^3$ (0.02 ppm) annual arithmetic average and 260 $\mu g/m^3$ (0.1 ppm) maximum 24-hr concentration, not to be exceeded more than once a year. This target also calls for 1300 $\mu g/m^3$ (0.5 ppm) maximum 3-hr concentration, not to be exceeded more than once a year.[5]

Instrument range is generally selected for 0 to 1 ppm full-scale range except where higher levels are anticipated. There is a sensitivity problem, because few instruments are capable of accurately reading at levels of 0.01 ppm and below. Statistical procedures are usually required to determine arithmetic average concentrations.

Calibration

The standard procedure for calibrating sulfur dioxide instruments involves the preparation of known concentrations of SO_2 in air. This can be accomplished with high accuracy when permeation tubes, made of Teflon® tubing and containing liquid sulfur dioxide, are maintained at constant temperature while a constant flow of air is passed over the tube. The most desirable procedure is a system calibration rather than an instrument calibration, with the known concentration introduced at the system inlet.

Colorimetric Analyzers

A detailed discussion of colorimeters can be found in Section 8.15.

The reference technique for determining the sulfur dioxide content of atmospheric air is based on the absorption of SO_2 from an air sample by a solution of sodium tetrachloromercurate, which, upon the addition of formaldehyde and a pararosaniline dye, forms a strong purple dye complex. Several manufacturers have automated this procedure and offer packages such as the one shown in Figure 8.56g.

This family of analyzers requires frequent maintenance because of the complexity of the plumbing and the tendency of the dye complex to plate out on the cell windows, thus reducing sensitivity. Properly maintained, they provide an excellent record of sulfur dioxide concentrations in the air, because they operate on the basis of a chemical reaction, which is specific for sulfur dioxide.

Conductimetric Analyzers

There is more experience with the operation of this family of analyzers than with any other in sulfur dioxide detection applications. The instruments are fairly simple electronically, but the associated piping does create some maintenance problems. The basic electric circuit diagram is shown in Figure 8.56h.

To cause a change in the resistance of the measurement cell (Rm) as the sulfur dioxide concentration of the sample changes, some of the available instruments use a weak

© 2003 by Béla Lipták

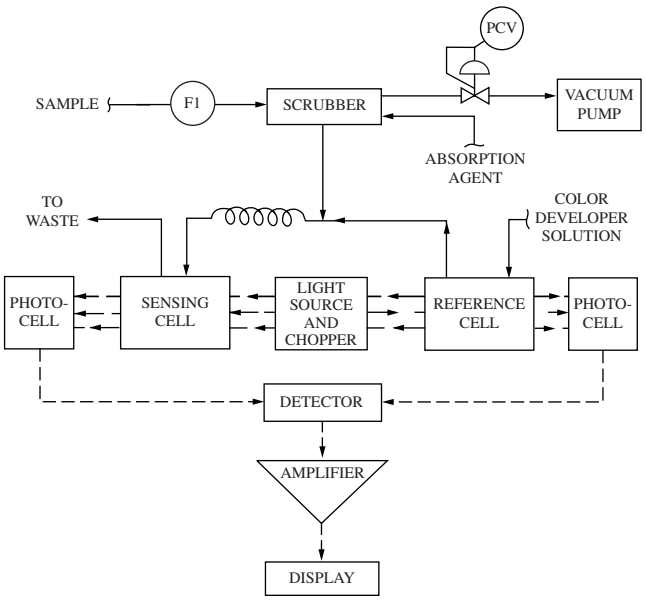

FIG. 8.56g
Automatic colorimetric analyzer for the detection of oxides of sulfur in air.

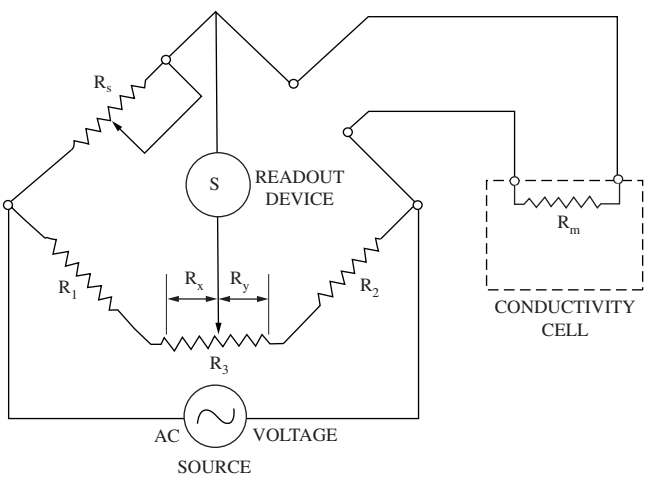

FIG. 8.56h
The electric bridge circuitry for the measurement of conductivity.

solution of sulfuric acid and hydrogen peroxide as an absorbent, whereas others use distilled water. These instruments must be temperature compensated, because the change in resistance (conductance) over the normal ambient temperature range is nearly as large as the conductance changes that can be expected as a result of the variation in sulfur dioxide concentration of ambient air.

Conductimetric analysis is not specific to sulfur dioxide. The presence of acidic or basic gases must be compensated for; otherwise, they will interfere with the accuracy of the reading. Gases such as hydrogen chloride will cause positive interference, and basic gases such as ammonia will introduce a negative interference.

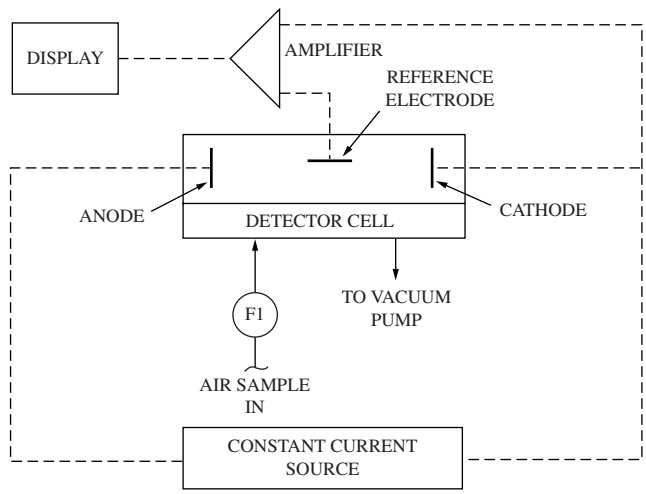

FIG. 8.56i
Coulometric analyzer for oxides of sulfur.

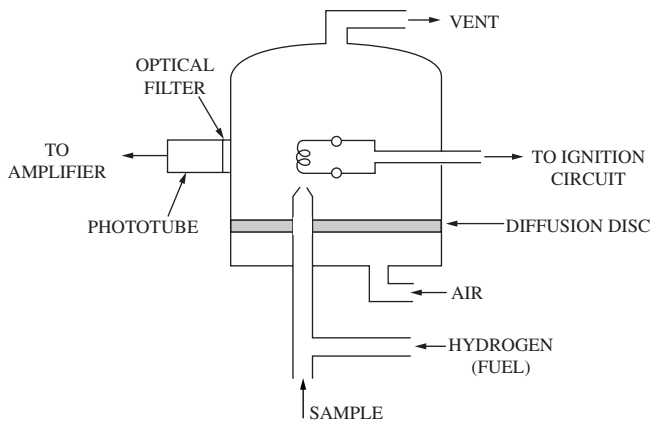

FIG. 8.56j
Flame photometric analyzer.

Coulometric Analyzers

From a solution of bromine or iodine, the reducing action of sulfur dioxide will electrogenerate free bromine or iodine. These elements can than be detected to give an indication of the SO_2 content of the sample air stream (Figure 8.56i).

The required supply of reagents for coulometric analyzers is usually less than the reagent requirements of either colorimetric or conductimetric analyzers. At least one commercially available coulometric analyzer is capable of measuring ozone (Section 8.44) concurrently with sulfur dioxide.

Flame Photometric Analyzers

Flame photometric analyzers are discussed in Sections 8.12 and 8.49. These analyzers utilize the phenomenon that, when an air stream containing sulfur is burned in a hydrogen-rich flame, radiation is generated in a wavelength band centered at 394 μm. Flame photometric detectors can measure sulfur concentrations in air down to levels less than 0.01 ppm. The electrical output signal of this detector (Figure 8.56j) is logarithmic.

© 2003 by Béla Lipták

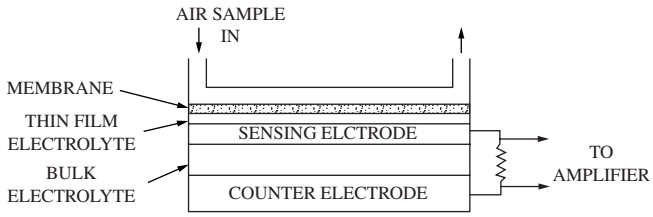

FIG. 8.56k
Electrochemical gas analyzer.

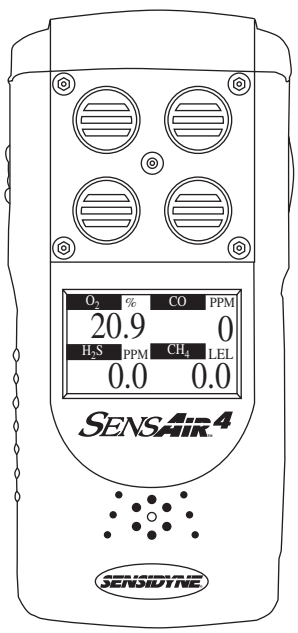

FIG. 8.56l
Portable electrochemical detectors are available for the measurement of up to four gases. (Courtesy of Teledyne API.)

Typical instrument ranges can cover two decades of concentration, e.g., 0.01 to 1.0 ppm, with the capability to switch to a higher range.

This instrument measures total sulfur in the sample stream. To provide discrimination between various sulfur compounds, additional hardware is available from some manufacturers. An all-Teflon gas chromatographic column preceding the flame photometric analyzer can be used to separate the sulfur compounds quantitatively. This combination (Section 8.12) has proved extremely useful for the measurement of reduced sulfur compounds, e.g., hydrogen sulfide and dimethyl disulfide in the air.

Electrochemical Analyzers

When air passes over an element consisting of a semipermeable membrane, an electrolyte, and a voltage-sensitive pickup, some gases will selectively migrate through the membrane and generate a signal in the electrolyte (Figure 8.56k). This phenomenon has been used to measure the concentration of many gases in ambient air, including sulfur dioxide.

The electrochemical principle for the measurement of air pollutants has not had extensive field use, but it is used as the sensor in pocket-sized portable indicators and alarms (see Figure 8.56l). Operational problems can develop in maintaining the proper moisture content of the membrane and the proper electrolyte strength because of the migration of water vapor.

References

1. Van Agthoven, M. A., Mullins O. C., et al., Near-infrared spectral analysis of gas mixtures, *App. Spectroscopy,* 56(5), 593–598, 2002.
2. Homolya, J. B., Monitoring SO_2 emissions from stationary sources, *Proc. ISA Conf.,* Houston, TX, October 1973.
3. Nelson, R. L., Tunable crystal enhances IR analyses, *InTech,* 1987.
4. *Federal Register,* Part II, Vol. 36, August 14, 1971, 158.
5. *Federal Register,* Part II, Vol. 36, April 30, 1971, 84.

Bibliography

Costs and Benefits of Sulfur Oxide Controls, Organization of Economic Cooperation and Development, 1981.

Ewing, G., *Analytical Instrumentation Handbook,* Marcel Dekker, New York, 1990.

Gunnell, J. and Van Vuuren, P., Process analytical systems: a vision for the future*, J. Proc. Anal. Chem.,* 6(1), 1–5, 2001.

Hommel, C. O. and Sekhar, N., Parameter monitoring for SO_2 and NO_x emissions, *Proc. 1992 ISA Conf.,* Houston, TX, October 1992.

Landa, I., Visible (VIS) near infrared (NIR) rapid spectrometer for laboratory and on-line analysis of chemical and physical properties, *Proc. SPIE,* 665, 286–289, 1986.

Lodge, J. P., *Methods of Air Sampling and Analysis,* 3rd ed., Lewis Publishers, Boca Raton, FL, 1988.

MacRae, M., Analyzing new options, *Pharm. Tech. Cleveland*, 26(2), 118, 2002.

Schirmer, R. E., On-line fiber-optic-based near infrared absorption spectrophotometry for process control, *Proc. ISA,* 1229–1235, 1986.

Stoeppelwerth, P. B., Utility boiler control system upgrade, *Proc. 1992 ISA Conf.,* Houston, TX, October 1992.

Van Agthoven, M. A., Mullins, O. C. et al. Near-infrared spectral analysis of gas mixtures, *Appl. Spectroscopy,* 56(5), 593–598, 2002.

Van der Maas, J. H., *Basic Infrared Spectroscopy,* Heyden & Sons/Sadtler Research Labs, Philadelphia, PA, 1969.

Yaws, C. L., Sulfur oxides, *Chem. Eng.,* July 8, 1974.

© 2003 by Béla Lipták

8.57 Thermal Conductivity Detectors

J. E. BROWN (1969, 1982) **B. G. LIPTÁK** (1995, 2003)

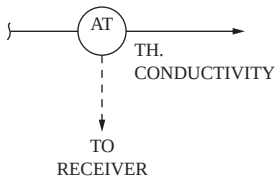

Flow Sheet Symbol

Applications:	Gases or vapors; best suited for binary gas applications such as detector on chromatographs or leak detection or for hydrogen and helium analyses, because these gases have high thermal conductivity
Design Pressure:	Near atmospheric
Sample Temperature:	35 to 110°F (2 to 43°C)
Cell Materials of Construction:	Brass, stainless steel, Monel®
Range:	The full span of the analyzer should correspond to a minimum of a 2% change in the thermal conductivity of the gas mixture.
Inaccuracy:	Inaccuracy is 1 to 2% of full scale for binary samples when the thermal conductivity of each constituent is accurately known. Published thermal conductivity data can be in error by as much as 5%. Interpretation of readings on multicomponent mixtures require additional measurements and analysis.
Cost:	A portable leak detector with 10^{-5} cc/sec sensitivity costs $1600; industrial analyzers for binary mixtures range from $2500 to $6000; analyzers with higher sensitivity and/or in corrosion-resistant materials cost from $6000 to $12,000.
Partial List of Suppliers:	ABB Process Analytics (www.abb.com/analytical) Cole-Parmer Instrument Co. (www.coleparmer.com) Gow-Mac Instrument Co. (www.gow-mac.com) Ion Track Instruments (www.iontrack.com) MSA Instrument Div. (www.msa.com) Siemens Applied Automation (www.sea.siemens.com) Teledyne Analytical Instruments (www.teledyne-ai.com) Thermco Instrument Corp. (www.thermco.com/)

INTRODUCTION

Composition measurement by detecting the thermal conductivity of gases is one of the simplest and oldest methods of analyzing process streams. Early developments by the British resulted in an instrument of this type, which was called a *katharometer* or *catharometer*. The name still persists in Europe.

This technique takes advantage of the facts that different substances have a varying capacity to conduct heat energy from a heat source. This ability differs for each gas. It is called *thermal conductivity* and can be expressed in various unit systems such as BTU/hr/ft^2/°F/in.; W/sec/cm^2/°C/cm; kiloergs/sec/cm^2/°C/cm, and so on.

This is a simple, rugged, inexpensive, reliable, and easily maintained, but nonspecific, analyzer that can determine the composition of only binary mixtures. It is not very sensitive, nor is it very fast, but it is well suited for many chromatographic and leak detection applications.

THERMAL CONDUCTIVITY

Thermal conductivity is often expressed as a factor relating the ability of a particular gas to conduct heat to that of air at various temperatures (Table 8.57a). In practice, continuous thermal conductivity analyzers measure a *change* in heat dissipation by comparing the change with a *reference* condition.

© 2003 by Béla Lipták

TABLE 8.57a
Thermal Conductivity Factors

	R_0*	R_{100}*
Acetone	0.406	0.546
Acetylene	0.776	0.900
Air	1.000	1.000
Ammonia	0.897	1.086
Argon	0.709	0.725
Benzene	0.370	0.573
Carbon dioxide	0.614	0.690
Carbon monoxide	0.964	0.962
Chlorine	0.322	0.381
Ethylene	0.735	0.919
Ethane	0.807	0.970
Helium	6.230	5.840
Hydrogen	7.130	6.990
Methane	1.318	1.450
Nitrogen	0.996	0.996
Oxygen	1.043	1.052
Pentane(n)	0.520	0.702
Refrigerant 12	0.354	0.356
Sulfur dioxide	0.344	0.377

*R_0, R_{100} = Thermal conductivity of gas/thermal conductivity of air at 0 and 100°C, respectively.

TABLE 8.57b
Ranges of Gas Mixture Compositions Suitable for Measurement by Thermal Conductivity

Gases in the Mixture	*Range of Concentrations of the First Gas in the Second*	*An Error of 1% of Full Scale Corresponds To*
Air in carbon dioxide	0–5%	0.05%
Air in helium	0–2.5%	0.025%
Air in oxygen	0–0%	0.4%
Air in sulfur dioxide	0–1%	0.01%
Argon in nitrogen	0–7%	0.07%
Carbon dioxide in air	0–7%	0.07%
Carbon dioxide in nitrogen	0–7%	0.07%
Carbon dioxide in oxygen	0–6.5%	0.065%
Helium in air	0–0.5%	0.005% (50 ppm)
Helium in hydrogen	0–12%	0.12%
Hydrogen in helium	0–10%	0.1%
Hydrogen in nitrogen	0–0.3%	0.003% (30 ppm)
Nitrogen in argon	0–5%	0.05%
Nitrogen in carbon dioxide	0–5%	0.05%
Nitrogen in hydrogen	0–2.5%	0.025%
Nitrogen in oxygen	0–55%	0.55%
Oxygen in air	0–38%	0.38%
Oxygen in carbon dioxide	0–4.5%	0.045%
Oxygen in nitrogen	0–52%	0.52%
Sulfur dioxide in air	0–3%	0.03%

Measurement Ranges

It has been known for more than a century that the heat-conducting ability of various gases differs considerably. Therefore, by measuring the thermal conductivity of a binary mixture, one can determine the composition of the mixture. The accuracy of the measurement is a function of the reliability of the thermal conductivity data used for the gases making up the mixture, and those data are not always accurate.

Some of the common thermal conductivity analyzer applications include the measurement of *hydrogen* in air, nitrogen, carbon dioxide, carbon monoxide, argon, blast furnace gases, and reformer gases; *helium* in air or nitrogen; *methane* in air; *propane* in air; *Freon*® in air; and *carbon dioxide* in air, nitrogen, or flue gases.

A general rule is that the full span of the analyzer should correspond to a minimum 2% change in the thermal conductivity of the gas mixture. Table 8.57b gives the full-scale ranges of some binary gas mixtures that will result in at least a 2% change in the thermal conductivity of the mixture. It can be noted that, as the thermal conductivity of a gas (helium, hydrogen) increases, so does the sensitivity of measurement; therefore, the range can be narrower.

THE TCD ANALYZER

The thermal conductivity detector (TCD) can measure the composition of binary mixtures at moderate sensitivity.

Main Components

The major components of a thermal conductivity analyzer are the measuring cell, regulated power supply, Wheatstone bridge, and case temperature control.

The Detectors The measuring cell consists of a relatively large mass of metal to provide a stable heat sink. Through the metal block, flow passages are drilled or formed, and a recessed cavity is machined for inserting a heat-source and sensing element, such as a hot-wire filament. The cell material must be compatible with the process gas sample and must also have a high thermal conductivity coefficient. Stainless steel is generally employed.

The detector transducers can be resistance wires (filaments) or thermistors (beads of metallic oxide). The operation of these heated elements is similar except that filaments have positive, and thermistors have negative, resistance coefficients. This

© 2003 by Béla Lipták

means that, as the temperature rises, the resistance of filaments also rises, but the resistance of thermistors drops.

The choice between them is based on sensitivity and temperature considerations. In general, thermistors are used for ambient and subambient applications, whereas resistance wire filaments are used at higher temperatures. In terms of sensitivity, the thermistors are superior.

Hot-wire filaments are in prevalent use now as a result of improved filament designs. Up to 1965, thermal conductivity analyzers frequently used thermistors to achieve desired sensitivity. Thermistors are beads of metallic oxides with a thin coating (typically glass) over the surface. This coating tends to crack with excess heat and, when this element is used in gases with high hydrogen content, the oxides are reduced by the hydrogen, and drift is experienced. Glass-bead thermistors develop frequent failures, particularly when used in high-hydrogen-containing gases. The hot-wire filaments develop surface temperatures between 400 and 750°F (204 and 400°C) and are sometimes used with a catalyst coating to promote catalytic cracking of hydrocarbons to further increase system sensitivity.

Once the selection is made, the next step is to pick the right material to withstand the corrosiveness of the sample gas. The filaments are usually made from tungsten or platinum alloy materials, but nickel, rhenium-tungsten, and gold-plated tungsten filaments are also available. The wire diameter is about 0.001 in (0.03 mm).

The TCD Cells Figure 8.57c illustrates a TCD block assembly with the measuring filaments inserted into both the measuring and reference chambers. This is a flow-through design using a single (replaceable) measuring and a single reference filament configured into a classical Wheatstone bridge circuit.

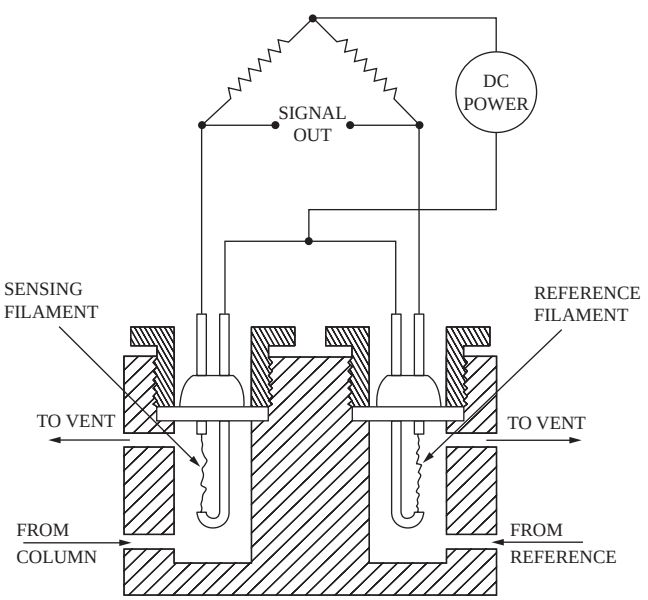

FIG. 8.57c
The design of a two-element, flow-through TCD cell.

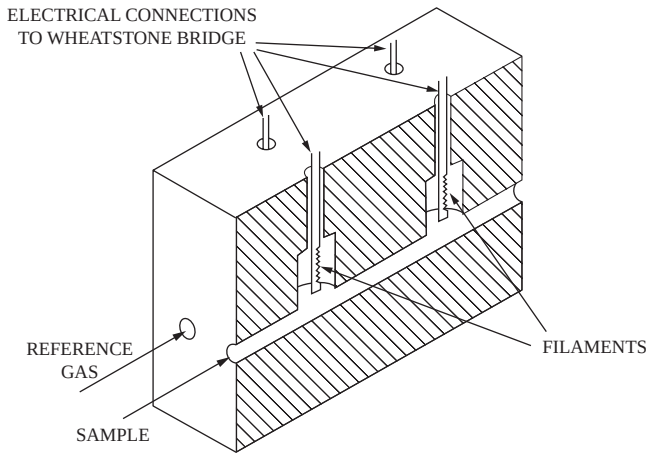

FIG. 8.57d
Four-element thermal conductivity cell.

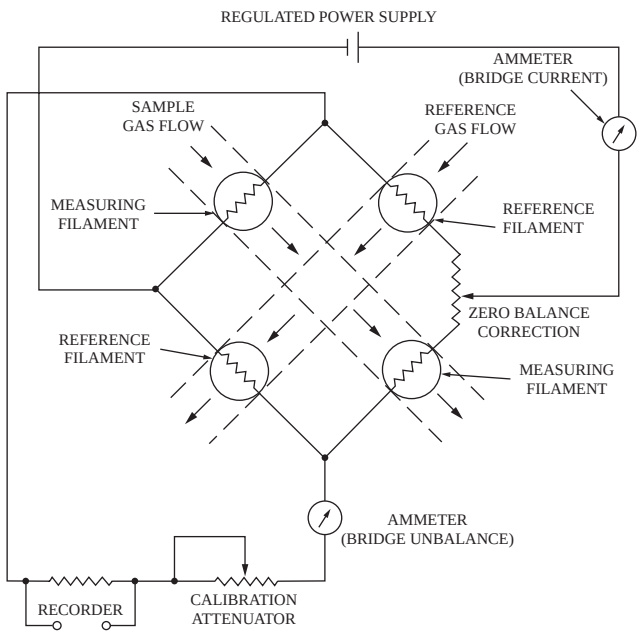

FIG. 8.57e
Typical Wheatstone bridge measuring circuit for thermal conductivity analyzer.

In addition to the two-element design, four-element thermal conductivity cell designs with recessed hot-wire filaments are also available, as shown in Figure 8.57d. The elements are used in pairs, one in the sample stream and one in the reference gas. One or two pairs are normally used, but some cell designs include eight pairs to improve sensitivity. Vertical mounting is preferred to prevent sagging of the wire elements. The recessed elements generally provide an improved noise level but poorer response speed.

The response speed of the TCD is a function of the internal volume of the detector cell. The flow through the cell must be constant (usually in the range of 15 to 100 ml/min for chromatographic and 500 ml/min for process analyzers).

© 2003 by Béla Lipták

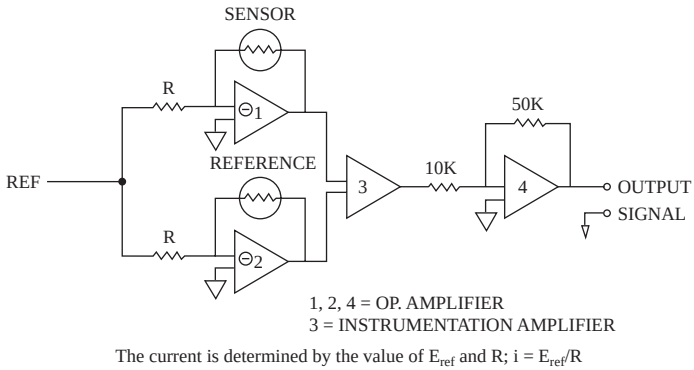

FIG. 8.57f

The electric circuit for providing constant current to a TCD utilizing thermistor bead elements. (From Annino, R. and Villabolos, R., Process Gas Chromatography: Fundamentals and Applications, Research Triangle Park, NC: ISA, copyright 1992 ISA. Used with permission. All rights reserved.)

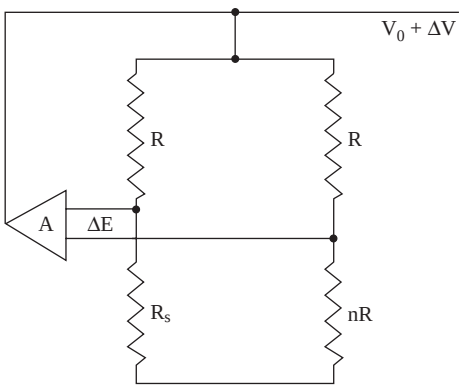

FIG. 8.57g

The electric circuit for providing a constant resistance/temperature circuit for a TCD. (From Annino, R. and Villabolos, R., Process Gas Chromatography: Fundamentals and Applications, Research Triangle Park, NC: ISA, copyright 1992 ISA. Used with permission. All rights reserved.)

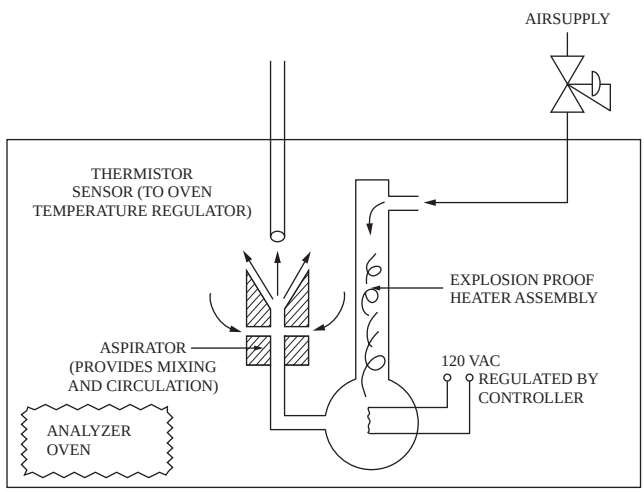

FIG. 8.57h

Oven temperature regulator using thermistor-type sensor provides sensitive temperature control.

Bridge Circuits The sensing system can be a basic Wheatstone bridge that uses a high-quality regulated power supply (Figure 8.57e) rated between 100 and 300 mA. Analyzer stability is primarily a function of power supply voltage regulation. In addition to the means of improving sensitivity, it is more practical to use low-noise operational amplifiers on the bridge output. However, a low signal-to-noise ratio is required of the basic bridge output.

To provide faster response and to protect the filaments if the flow of carrier gas fails, the latest TCD designs favor constant current or constant resistance bridges (see Figures 8.57f and 8.57g).

Temperature Control Case temperature control provides a constant temperature environment for the measuring cell to enhance stability. Various temperature control systems are used, ranging from off/on thermal switches with bare strip heaters to the more refined ones for chromatographic ovens (see Figure 8.57h). Analyzer stability can be adversely affected by inadequate temperature control.

Operation

The thermal conductivity analyzer, when used as a chromatographic detector, operates with a metered sample of 50 to 200 cc/min (flow controlled). The sample flow passes through the measuring cell and across the filaments or glass-bead thermistors, which are "hot" from being heated by the Wheatstone bridge. This resistance heating provides an elevated temperature on the surface of the filament.

Heat energy is conducted from the filament, through the flowing gas, and to the walls of the cell. The quantity of heat thus conducted is a function of the thermal conductivity of the flowing gas. When a sample stream of lower thermal conductivity than that of the zero standard gas is introduced, less heat is conducted away, and the filament surface temperature (and its resistance, if it is a hot-wire filament) increases.

© 2003 by Béla Lipták

This causes an unbalance in the Wheatstone bridge. The degree of unbalance can be calibrated in terms of composition.

If a thermistor-type detector is used, it has a negative temperature coefficient, so it will unbalance the bridge in the opposite direction, thus requiring a polarity reversal for the ammeter connections. Otherwise, the operation is identical.

The Reference Filament Reference filaments are used to provide compensation for temperature and barometric pressure variations. Because the reference filaments are in opposite legs of the bridge relative to the measuring filaments, small temperature variations in the cell should affect both filaments equally and therefore cancel out. The reference gas can be sealed for this purpose, but a *flowing reference* provides additional compensation, because the venting pressure reflects any variations in barometric pressure.

The reference gas is usually a single gas that is the same as the major component in the sample gas. Reference flow is generally less than the sample flow, 40 to 100 cc/min.

Packaging and Calibration

The packaging of thermal conductivity analyzers varies with suppliers, but most manufactorers separate the electronics (power supply and bridge) from the temperature-controlled case. In some cases, the two parts can be physically separated by a distance of up to 100 ft (30 m). In most designs, the cabinets require little more panel or wall space than do conventional transmitters.

Calibration is accomplished using known samples to establish an empirical calibration reference.

LIMITATIONS

Although simple in design, this analyzer has a major limitation: only binary mixtures can be accurately measured by it. The analyzer is nonspecific; because it measures the total thermal conductivity of the process sample, it cannot distinguish or identify the component that causes the conductivity change in multicomponent mixtures. Therefore, its applications are limited to binary or binary-like mixtures. Some industrial gas streams are binary mixtures and do require analysis.

Hydrogen in Hydrocarbons

One notable exception to the above-mentioned general rule is the analysis of hydrogen in hydrocarbons. From Table 8.57a, it can be seen that hydrogen has a very high R_0 value relative to most hydrocarbon gases. In such cases, the sample often can be considered to be a hydrocarbon-hydrogen binary mixture and calibrated using an "average" background of nonhydrogen components. The error in measurement will depend on the true concentrations of the other components but, in many applications, ±5% full-scale inaccuracy is easily attainable.

CONCLUSIONS

The advantages of the thermal conductivity analyzer include its low cost, simplicity, reliability, and reasonable speed of response. Its main limitation is that it can measure only binary mixtures. In addition to its nonspecific nature, the need for empirical calibration further restricts its use.

It is also recommended that all water vapors be removed from the measurement sample by drying. Because of the above-listed limitations, its applications are few and usually involve binary mixtures for applications such as leakage measurement and chromatography or the detection of hydrogen or helium in applications where the thermal conductivity of the "background" gases is low and relatively constant.

Bibliography

Annino, R., Process gas chromatographic instrumentation, *Am. Lab.*, 21(10), 60–71, 1989.

Guild, L., Design and performance of thermal conductivity detectors, *Victoreen*, 3.

Hoffman, Computerized dry-air leak testing for process control, *Med. Dev. Diagn. Ind*., January 1996.

Krigman, A., Process chromatography: difficult becomes routine, *InTech*, 30(10), 34–55, 1983.

McNair, H. M., Process gas chromatography, *Am. Lab.*, 19(1), 17–20, 1987.

Tye, R. P., The art of measuring thermal conductivity, *InTech*, March 1969.

Villalobos, R., Process gas chromatography, *Anal. Chem.*, 47(11), 983A–1004A, 1975.

Weiss, M., Three keys to keeping process chromatographs on line, *Control*, May 1991.

Yarborough, D. W., *Thermal Conductivity*, Kluwer Academic/Plenum, New York, 1988.

Yaws, C. L., *Handbook of Transport Property Data, Viscosity, Thermal Conductivity*, Gulf Professional Publishing, Houston, TX, 1995.

© 2003 by Béla Lipták

8.58 Total Carbon Analyzers

G. YOUNG (1974, 1982) **B. G. LIPTÁK** (1995) **M. T. LEE-ALVAREZ** (2003)

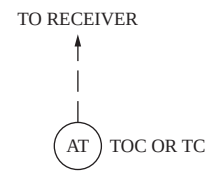

Flow Sheet Symbol

Methods of Detection:
A. Nondispersive infrared (NDIR)
B. Aqueous conductivity with ultraviolet (UV) irradiation
C. Coulometric detectors
D. Colorimetry
E. Flame-ionization detection (FID)

Samples:
Laboratory sample sizes range from 0.01 to 40 cc. For in-line applications, the sample flow rates range from 0.25 to 30 cc/min

Flowing Sample Solids Content:
Up to 1000 mg/l; size of particles up to 200 μm in diameter

Materials of Construction:
Glass, quartz, Teflon®, stainless steel, Hastelloy®, polyethylene, PVC

Measurement Cycle Time:
A, E. 3 to 7 min (TC requires 2.5 min and TOC requires 5 min) including sample pretreatment
B. Initially, 3 to 7 min, then continuous with speed of response of 30 s; results can be updated every 1 s
C. 5 to 7 min including sample pretreatment
D. 3 hr for 1 to 25 samples

Utilities or Reagents Required:
Air (10 ACFH, or 4.6 alpm), oxygen, nitrogen (carrier gas flow is 100 cc/min at 50 PSIG, or 3.5 barg), hydrogen, mineral acid (0.1 gal per month of sulfuric or phosphoric), oxidizing reagent, buffer, deionized water

Ranges:
A. 0.002 to 50,000 ppmC (0 to 5%)
B. 0.05 to 50,000 ppbC
C. 3 ppmC, 100%C
D. 0 to 20, 20 to 700 ppmC
E. 0 to 2 and 0 to 30,000 ppmC

Sensitivity:
A. 10 ppbC or 1% of full scale, whichever is greater
B. 1 ppbC
C. 0.01 μgC
D. 300 ppbC
E. 0.1 or 0.5% of full scale, whichever is greater

Inaccuracy:
1 to 5% of full scale as a function of design, sample size, and range

Costs:
A, B. $20,000 to $25,000 including PC and software, $25,000 to $28,000 with autosampler; C. $20,000 to $25,000 for a manual analyzer, $34,000 to $36,000 with autosampler and software; D. $600 to $900 for portable colorimeters, $5600 for spectrophotometers, $535 COD reactor, $250 reagent kit

Partial List of Suppliers:
Anatel (A, B) (www.anatel.com)
Bran and Luebbe, Inc. (A) (www.branluebbe.com)
Hach (D) (www.hach.com)

© 2003 by Béla Lipták

Ionics (A, B) (www.ionics.com)
Pollution Control Systems (A) (www.biotector.com)
Rosemount Analytical Inc. (A) (www.emersonprocess.com/proanalytic/)
Shimadzu Corporation (A) (www.shimadzu.com)
Tekmar-Dohrmann (A) (www.tekmar.com)
UIC Inc. (C) (www.uicinc.com)
Zellweger Analytics (A) (www.zelana.com)

INTRODUCTION

A variety of wastewater parameters can be monitored to assess the pollutant load that these wastes represent. The total organic carbon (TOC) concentration of the waters and wastewaters is often used as a quality indicator. The classical biochemical oxygen demand (BOD) and the chemical oxygen demand (COD) have long been employed for similar purposes. All three readings have their strengths and weaknesses.

Advantages and Limitations

A TOC analysis is very rapid and accurate, but it measures only the organic carbon content and it therefore does not detect the pollutant load that is represented by nitrogen-based molecules. A BOD analysis is slow, but it measures all molecules that exert an oxygen demand on the receiving waters, and its readings will vary if the bioassay used is changed. Thus, the BOD, in addition to being a lengthy five- or seven-day analysis, gives significantly different readings as a function of the bioassay used.

The COD analysis suffers from shortcomings in oxidation efficiencies, although its analysis time is reduced.

Direct correlation between TOC, BOD, and COD usually is not possible. On the other hand, with proper interpretation, the TOC can represent a rapid and frequently accurate method of assessing the pollution load levels of municipal and industrial wastes.

Carbon Measurement Techniques

To determine the TOC content of a sample, its total inorganic carbon (TIC) content first must be eliminated. The TIC present in a water sample is usually in the form of inorganic bicarbonates and carbonates. One of two techniques can be used to remove them.

In one technique, these components are analyzed independently and then subtracted from the total carbon (TC). In this case, the TOC is determined by the difference between TC and TIC.

$$TC - TIC = TOC \qquad \textbf{8.58(1)}$$

The other technique is to acidify the sample down to a pH of 2 to 3, followed by a brief gas sparging to drive off the carbon dioxide formed by the acidification. Any carbon remaining after this sparging should be TOC. Therefore, the TC found in the sparged sample is considered to be equal to the TOC content of the original sample. One weakness in this technique is the possibility that some volatile organic carbon (VOC) that was present in the original sample might be lost during sparging. Additional techniques are available to account for such VOC.

Analyzer Development

As a result of the rapid acceptance and usefulness of TOC analysis as a laboratory method, on-line TOC analyzers became available in the late 1960s. The TOC analyzer was first introduced in 1964 as a single-channel TC analyzer using a catalytic oxidation combustion step followed by the analysis of the resulting carbon dioxide. In this analyzer, the inorganic carbon (IC) was either removed by acid sparging or was determined by titration. A few years later, a second channel was added to this analyzer, which permitted parallel determination of the IC in a second heated reaction chamber.

Since the earlier period, several other techniques have appeared with various changes in the methodology of detection. Their success has been limited by the relative complexity of these continuous analyzers. By 1980, there were at least four distinctly different methods in use to accomplish TOC analysis. Among these detection methods are considerable variations, depending on the instrument manufacturer using them and on the level of carbon concentration in the analyzed process sample.

Official Methods of TOC Determination

A user's choice may also be limited by industry and government standards that apply to a particular analysis. Table 8.58a provides a list of different oxidation/detection techniques and their corresponding U.S. and EU methods.[1] Most TOC analyzers used in the laboratory include an autosampler for higher sample throughput and a PC, which allows easier operation of the instrument. A separate module for the analysis of solids is also available from most manufacturers.

DETECTOR TYPES

Nondispersive Infrared (NDIR) Analyzers

The TOC analyzers first convert all organic matter to CO_2. After this conversion, a continuous flow of oxygen or air carrier gas transports the resulting cloud of steam and CO_2 through a condenser and water trap into a nondispersive infrared (NDIR) analyzer, where the CO_2 concentration is measured. The detector compares the peak area of the sample to the peak area of a calibration standard and calculates the carbon concentration value.

© 2003 by Béla Lipták

TABLE 8.58a
Official Methods of TOC Determination

Oxidation Method	*Detector*	*Analytical Range*	*Official Methods*
Combustion	NDIR	0.004 to 25,000 mg/l	EPA 415.1, 9060A Standard Method 5310B ASTM D2579 ASTM D5173 DIN 38 409 H3 ISO 8245 AOAC 973.47 USP 643
Combustion	Coulometric	2 to 50,000 mg/l	ASTM D4129 ASTM D513
UV	NDIR or conductivity	0.0005 to 0.5 mg/l	USP 643 ASTM D4839 ASTM D4779
UV/persulfate	Membrane/conductivity	0.0005 to 50 mg/l	USP 643 Standard Method 5310C ASTM 5904
UV/persulfate	NDIR	0.002 to 10,000 mg/l	EPA 415.1, 9060A Standard Method 5310C ASTM D2579 ASTM D4839 ASTM D4779 ASTM D5173 ISO (Draft) 8245 AOAC 973.47 USP 643
Heated persulfate	NDIR	0.002 to 1,000 mg/l	EPA 415.1, 9060A Standard Method 5310C ASTM D2579 ASTM D5173 ISO (Draft) 8245 AOAC 973.47 USP 643

High-Temperature Combustion The original and the expanded high-temperature methods[2,3] both contained a high-temperature furnace and a combustion tube to catalytically oxidize all carbonaceous species (TC) into carbon dioxide (CO_2). Figure 8.58b illustrates a high-temperature combustion analyzer using an NDIR sensor. Sample is delivered into the furnace, which contains a combustion tube. The temperature within the combustion tube is maintained at about 680 to 1000°C. Catalysts such as platinum or cobalt oxide, which are placed on a suitable substrate, promote the conversion of carbon in the sample to CO_2. The stream of gas passes through a halide scrubber and then enters the NDIR detector, where CO_2 is measured.

The high-temperature combustion method has found great utility in monitoring wastewaters, salty waters,[4] and particulate matrices.[5] The next challenge for the high-temperature techniques is the magnitude and variability of the instrument blank.[6] Instrument manufacturers have developed better catalysts and improved their methods to minimize their effects. They have also lowered the detection limit, making these analyzers suitable for drinking water and some pharmaceutical applications.

Wet Chemical Oxidation Wet chemical methods have the advantage of better sensitivity, because they analyze a large volume of sample (up to 20 ml) and thereby increase the intensity of the resulting NDIR signal for a given concentration.[1] In this analysis, the sample is also delivered to an oxidation chamber, where the addition of a persulfate reagent and acid in the presence of UV light or heat (~100°C) results in the formation of a hydroxyl radical (^{-}OH) that converts carbon to CO_2. The CO_2 produced is continuously sparged and is transported to the detector by the carrier gas.

For trace amounts of carbon (less than 1 mg/l), the UV light by itself is sufficient for converting the organic carbon to CO_2. Ultraviolet light, with or without the persulfate reagent, has been widely used in low-level TOC applications in the semiconductor and the pharmaceutical industries. Other wet chemical methods include photocatalytic oxidation, which makes use of a 400-nm near-UV energy source, water, and a titanium dioxide slurry, which are used to produce the hydroxyl radicals.

Another method for producing the hydroxyl radicals is through the reaction of ozone with a hydroxide ion. Exposing

© 2003 by Béla Lipták

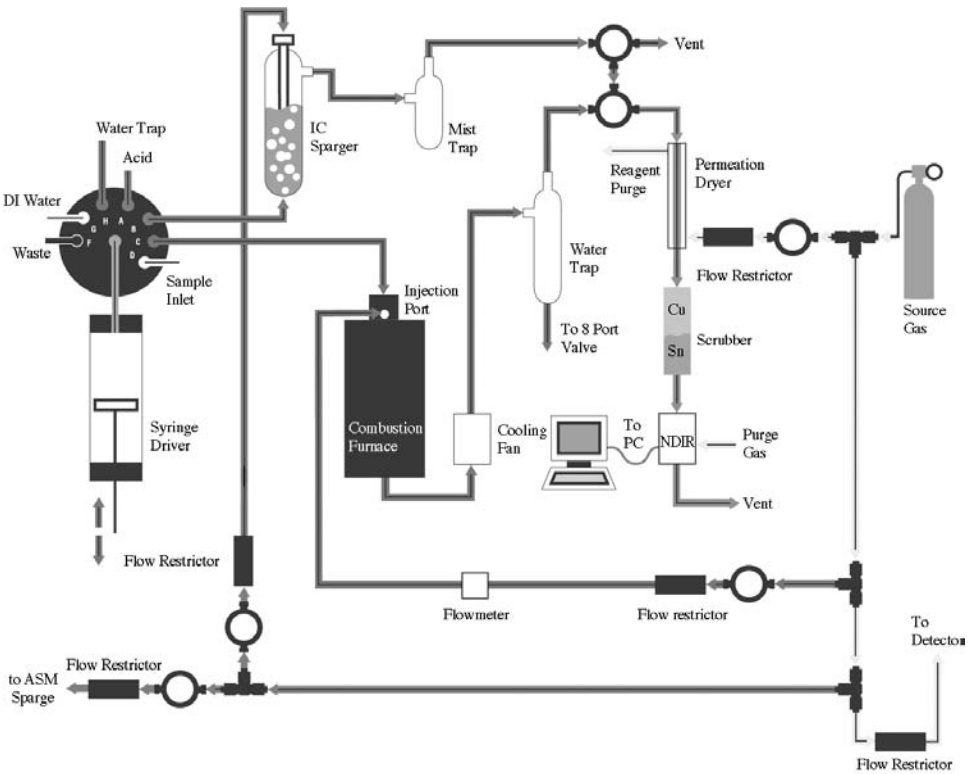

FIG. 8.58b
Catalytic combustion analyzer with NDIR sensor. (Courtesy of Tekmar-Dohrmann.)

oxygen gas to UV radiation produces ozone. This method of oxidation can also be used in TOC measurements when the samples contain high chloride concentrations or high oil and fat content. This technology is currently available only for on-line TOC analysis.

Inorganic Carbon Introducing an aliquot of the sample into an inorganic carbon (IC) chamber and adding some acid results in the IC being converted to CO_2, which can then be measured with an NDIR detector. When the IC concentration is very large as compared with the TOC, such as in drinking waters, the difference method may not be as accurate as the acid sparge technique. For such applications, the IC must be manually or automatically acidified and sparged from the sample before TOC analysis. This method of analysis is available for both laboratory and on-line applications.

Automatic On-Line Design Figure 8.58c illustrates the catalytic- oxidation-type TOC analyzer, which has been adopted for continuous on-line operation. This design incorporates an acid injection system that converts the IC into carbon dioxide. The generated CO_2 is removed in a sparging chamber before the sample reaches the analyzer. If the sparging portion of the sampling system is left off, the analyzer becomes a TC analyzer.

If a second, low-temperature reaction chamber is added in parallel with the one shown in Figure 8.58c, the analyzer becomes a TOC differential analyzer, performing the same manner as the unit described in Figure 8.58b.

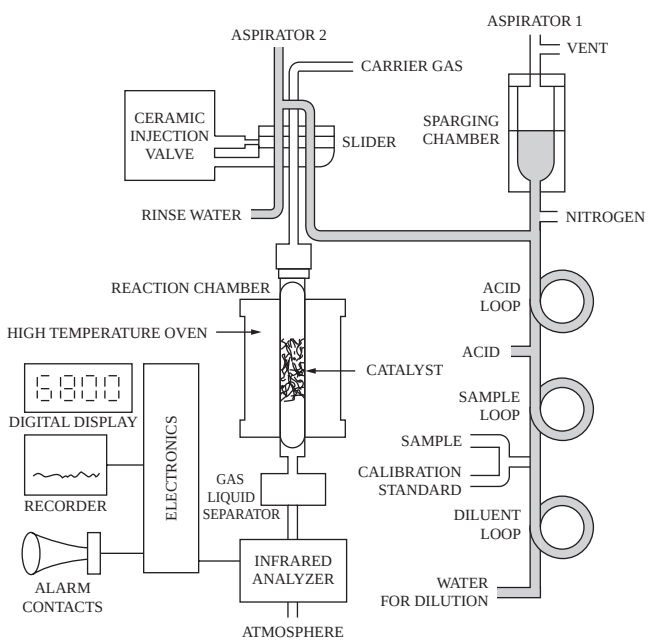

FIG. 8.58c
On-line, nondispersive infrared-type total organic carbon (TOC) analyzer. (Courtesy of Ionics Inc.)

The cycle time of this instrument is 2.5 min in the TC mode of operation and 6 min in the TOC mode. It can operate unattended indoors or outdoors in an analyzer house, and it

© 2003 by Béla Lipták

can handle samples with solids content up to 1000 ppm and with particle sizes up to 200 μm, because an automatic water rinse is applied after each measurement cycle.

The accuracy of the sample size is guaranteed by the design of the ceramic injection valve. The calibration of the instrument is automatically checked every time a known standard is introduced. During autocalibration, the analyzer runs three consecutive calibration standards, averages the results, and adjusts the instrument calibration to within preset limits or activates an alarm.

The analyzer is also provided with dilution and automatic range change capability for conditions when the concentration exceeds the operating range. The carrier gas (nitrogen) consumption is 100 cc/min at 50 PSIG (3.5 barg), and the acid consumption in the TOC mode is about 1.0 gal (3.8l) per month.

Aqueous Conductivity[7]

This method of analysis employs the ultraviolet-persulfate oxidation of organic carbon coupled with the measurement of CO_2 using conductivity. Most systems utilizing the conductivity detection method can be used for both laboratory and online applications.

Samples are introduced using an autosampler or through on-line sample tubing. Figure 8.68d illustrates a high-sensitivity TOC analyzer used in semiconductor and pharmaceutical applications, both in the laboratory and on line. The TOC analysis is performed by conversion of IC to CO_2 after addition of an acid. The CO_2 formed may be removed from the system by degassing, or it can stay in the stream and be measured as IC. The flow stream is divided into two channels for the separate measurement of TC/TOC and IC.

In the TC/TOC channel, the carbon in the sample is oxidized to CO_2 by the action of the persulfate reagent and the UV lamp. The CO_2 in the liquid stream passes through a semipermeable membrane and then dissolves in high-purity water. A conductivity cell located in the stream measures the increase in conductivity caused by the CO_2 and relates this to a calibration data.

A chemometric equation is used to determine the relationship between equilibrium concentrations of H^+, CO_2, HCO_3^-, and OH^- and conductivity. The temperature of the conductivity cell is monitored so that readings can be adjusted to compensate for changes in temperature. Continuous pumping through a mixed bed of ion-exchange resin purifies the water on the conductivity side of the membrane. This method has the advantage of being able to measure very low concentrations of carbon while using relatively small volumes of sample.

This analyzer has found use in semiconductor and power applications where TOC levels of less than 1 μg/l are required. The semipermeable hydrophobic membrane protects against and minimizes the interference from higher concentrations of chloride and other ions. This method of analysis is limited to cases in which carbonaceous matter can be introduced into the reaction zone, because the inlet system limits the size of the particles that can be introduced. In addition, the wet oxidation technique has very low recovery if the samples contain particulate materials.

On-Line Conductivity Another method that has found use specifically in on-line semiconductor reclaiming applications involves differential conductivity measurements, before and after oxidation of the water stream, as it moves through a quartz coil.

This instrument allows for TOC updates once per second. A parallel stream goes through a stopped-flow cell, which captures a 0.3 ml sample-water aliquot. Total organic carbon is measured through a dynamic end-point detection method. The stopped-flow cell serves to calibrate the continuous cell every 2 to 3 min. A typical sample flow rate of 30 to 300 ml/min can be used. The analyzer also includes an alarm for high TOC values.

Coulometric Analysis

In coulometric detectors, the carbon dioxide is indirectly titrated. In this analyzer, the carrier gas with the CO_2 reaches the electrochemical cell containing ethanolamine and an acid-base indicator dye. As the CO_2 reacts with the ethanolamine, a strong titratable acid is formed, and the strong blue color of the solution fades. This change is detected by a photometer.

At the cathode, an equivalent amount of hydroxide is electrochemically generated that neutralizes the acid that has formed and returns the cell to its original color. The current required to produce the hydroxide ions is directly proportional to the concentration of the carbon dioxide from the sample.

This detector does not need calibration standards, nor is it affected by water from the sample. It also gives a linear signal in its entire measuring range.

Colorimetric Analysis

This method provides an inexpensive TOC monitoring method for optimizing treatment processes. However, the results cannot be used to report the TOC values, which are required by the D/DBP rule for drinking water.

In this analyzer, the sample is first acidified and then sparged of TIC. In the outside vial, the organic carbon reacts with the persulfate and acid. The vial is placed for 2 hr in a COD reactor at 105°F (40.5°C) to allow for digestion of the organic compounds. The CO_2 generated diffuses through the inner ampule containing a pH indicator reagent. Carbonic acid is formed, which changes the pH of the solution. The degree of color change associated with the change in pH of the solution is related to the amount of organic carbon present in the sample.

© 2003 by Béla Lipták

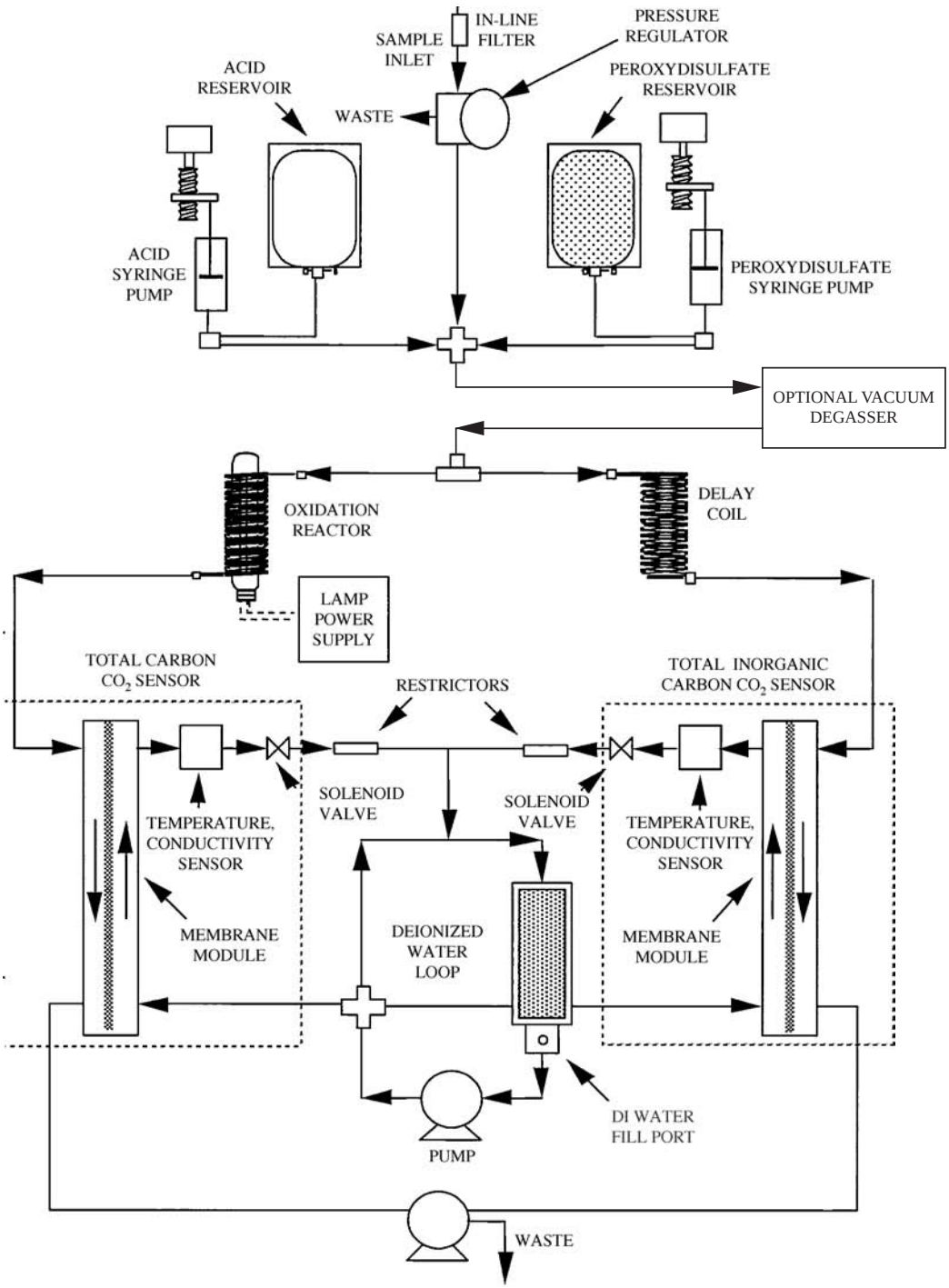

FIG. 8.58d
On-line conductivity TOC analyzer. (Courtesy of Ionics Inc.)

Flame Ionization Detector

Flame ionization detector (FID) analyzers are no longer manufactured for TOC analysis. However, they are still in use for VOC analysis.

In the FID-type analyzer (Figure 8.58e), a small acidified sample is transported in the presence of an oxidizer through a heated vaporization zone. Here, the organic carbon in the form of CO_2, plus any volatile organic carbon (VOC), is driven off. The residual sample is sent through a pyrolysis zone to convert the remaining TOC to CO_2. The CO_2 subsequently is converted to methane in a nickel-reduction step, and the resulting methane is measured by an FID detector. The VOC is separated from the CO_2 in a bypass column, reduced to methane, and routed to the same FID for an additional VOC analysis to be added to the dissolved organic carbon value.

© 2003 by Béla Lipták

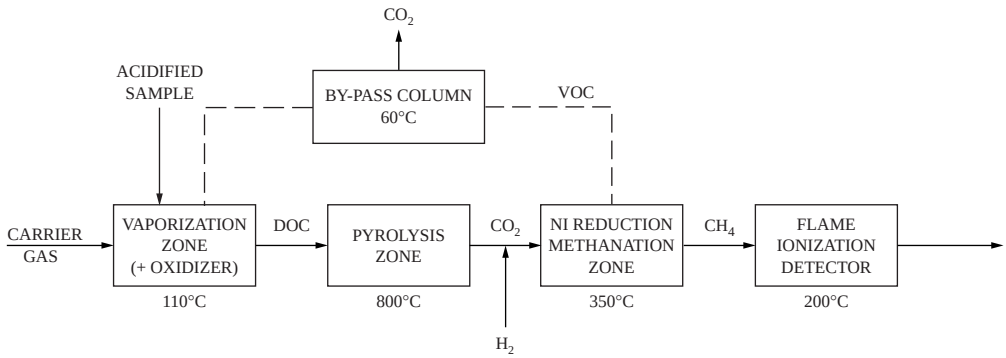

FIG. 8.58e
Flame-ionization detector.

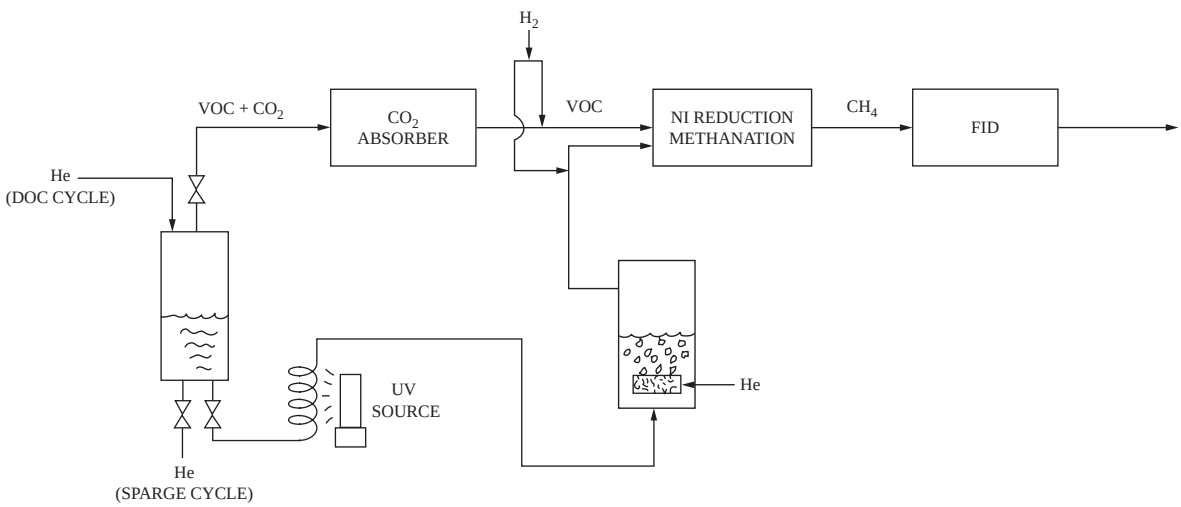

FIG. 8.58f
FID analyzer with wet oxidation.

Another method that also employs the FID to directly analyze the VOC after TIC (CO_2) is removed is shown in Figure 8.58f. In this method, the catalytic oxidation combustion is replaced by a wet oxidation step. Persulfate is added to the sample, and the solution is then exposed to ultraviolet (UV) radiation to enhance the efficiency of oxidation. The resulting CO_2 is sparged and converted in the nickel-reduction methanator, and its concentration is measured in the FID analyzer.

References

1. Wallace, B., Purcell, M., and Furlong, J., Total organic carbon analysis as a precursor to disinfection byproducts in potable water: oxidation technique considerations, *J. Environ. Monitoring*, 4, 35–42, 2002.
2. Van Hall, C. E., Saranco, J., and Stenger, V. A., Rapid combustion method for the determination of organic substances in aqueous solutions, *Anal. Chem.*, 35(3), 315–318.
3. Van Hall, C. E., and Stenger, V. A., An instrumental method for rapid determination of carbonate and total carbon in solutions, *Anal. Chem.*, 39(4), 503–507.
4. Spyres, G., Nimmo, M., Worsfold, P. J., Achterberg, E. P., and Miller, A. E., Determination of dissolved organic carbon in seawater using high temperature catalytic oxidation techniques, *Trends Anal. Chem*, 19(8), 498–506, 2000.
5. Lee-Alvarez, M., Total organic carbon analysis of particulated samples, *Tekmar Dohrmann Appl. Note*, 9(22), 1999.
6. Urbansky, E. T., Total organic carbon analyzers as tools for measuring carbonaceous matter in natural waters, *J. Environ. Monitoring*, 3, 102–112, 2001.
7. *Annual Book of ASTM Standards*, American Society for Testing and Materials, D5997–96 and D4519, Philadelphia, PA.

Bibliography

Adams, V. D., *Water and Wastewater Examination Manual*, Lewis Publishers, Boca Raton, FL, 1989.

Annual Book of ASTM Standards, Part 31, American Society for Testing and Materials, Philadelphia, PA, 1974, 467–470, D 2579.

ASTM Standards, Vols. 11.01 and 11.02, Water and environmental technology, American Society for Testing and Materials, Philadelphia, PA.

D'Alessandro, P. L. and Characklis, W. G., Simple measurement technique for soluble BOD progression, *Water and Sewage Works*, September 1972.

Davis, E. M., BOD vs. COD vs. TOC vs. TOD, *Water and Wastes Eng.*, 32–38, February 1971.

© 2003 by Béla Lipták

Dawson, R., *Data for Biochemical Research*, Oxford University Press, 1990.
Fifth Supplement to USP 24 and NF 19 Method <643>, U.S. Pharmacopeial Convention, Inc., January 2000.
Fresenius, W. et al., *Water Analysis*, Springer-Verlag, Berlin/New York, 1988.
Geisler, C., Andrews, J. F., and Schierjott, G., New COD analysis arrives, *Water and Wastes Eng.*, April 1974.
Handbook for Monitoring Industrial Wastewater, U.S. Environmental Protection Agency, Technology Transfer, August 1973, 5–7 to 5–11.
Helms, J. W., Rapid Measurement of Organic Pollution by Total Organic Carbon and Comparison with Other Techniques, U.S. Department of Interior, Geological Survey, Water Resources Division, Openfile Report, May 21, 1970.
Hill, N. H., Carbon analyzers for contaminants in water, *InTech*, March 1969.
Jenkins, K., Vanderwielen, A., Armstrong, J., Leonard, L., Murphy, G., and Piros, N., Application of Total Organic Carbon Analysis to Cleaning Validation, *J. Pharm. Sci. Technol.*, 50(1), 6–15, 1996.
Jones, R. H. and Degaforde, A. F., Application of a high-sensitivity total organic carbon analyzer, *ISA Trans.*, 7(4), 267–272, 1968.
Kehoe, T. J., Determining TOC in waters, *Environ. Sci. Technol.*, 11(2), 137–139, February 1977.
McNeil, B. and Harvey, L., *Fermentation: A Practical Approach*, IRL Press, 1990.
Ratliff, T. A., *The Laboratory Quality Assurance System*, Van Nostrand Reinhold, New York, 1989.
Riegler, G., 3-minute BOD assessments, *InTech*, May 1987.
Roesler, J. F. and Wise, R. H., Variables to Be Measured in Wastewater Treatment Plant Monitoring and Control, *J. Water Pollut. Contr. Fed.*, 46(7), 1769–1775, July 1974.
Siepmann, F. and Teutscher, M., Abschlussberichtzum F + E Vorhaben 102-WA 161 Bau und Erprobung eines Mess, BMFT Abt Umweltforschung, 1984.
Small, J. W., New advances in TOC analysis, *Pollut. Anal.*, September 1980.
Tool, H. R., Manometric measurement of the biochemical oxygen demand, *Water and Sewage Works*, June 1967.
Van Hall, C. E., Barth, D., and Stenger, V. A., Elimination of carbonates from aqueous solutions prior to organic carbon determination, *Anal. Chem.*, 37(6), 769–771, May 1965.
What options are available for detecting benzene in water? *Control*, August 1992.
Williams, R. T., The carbonaceous analyzer as a water pollution research tool, *Proc. 21st Ann. ISA Conf. and Exhibit*, 1966.

© 2003 by Béla Lipták

8.59 Toxic Gas Monitoring

E. L. SZONNTAGH (1995) **J. M. JARVIS** (2003)

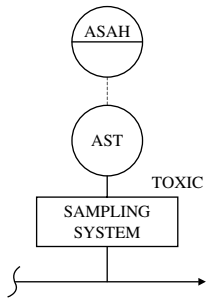

Flow Sheet Symbol

Applications:

Safety related monitoring of ambient air and enclosed spaces for toxic gases and vapors, reduced oxygen, and radon; also used for the monitoring of fugitive emission sources in manufacturing or processing typically from stacks, valves, and fume hoods

Types of Devices:

A. Personnel protection and dosage sensors
- A1. Dosimeter and color change badges for exposure monitoring
- A2. Direct reading dosimeter (indicating) tubes
- A3. Radon canisters
- A4. Sorption tubes for thermal desorption
- A5. Air sampling pumps
- A6. Thermal desorption instruments
- A7. Pocket-sized electrochemical monitors
- A8. Calibrators for toxic gas monitors

B. Continuous industrial monitors/alarms/transmitters
- B1. Electrochemical cells (membrane diffusion) or semiconductor
- B2. Infrared
- B3. Ultraviolet
- B4. Ionization detectors
- B5. Fluorescence and chemiluminescence
- B6. Chromatograph
- B7. Mass Spectrometer

Costs:

- A1. $350 to $500 for a package of five badges with prepaid analysis
- A2. $2 to $4 per tube; $200 for hand pump; $800 for automated pump
- A3. $45 to $250 per point for testing service
- A4. $35 to $120 per tube
- A5. $800 to $2000; about $1200 for an average pump
- A6. From $1700 to $20,000
- A7. $400 to $700 for single gas monitors; $800 to $2900 for multiple gas monitors
- A8. $850 to $15,000
- B1. $300 to $1700 per point of detection
- B2. $500 to $2000 per point of detection
- B3. $11,300 to $34,000; see Section 9.63
- B4. $1500 to $3500 for photoinization
- B5. Fluorescence and chemiluminescence
- B6. See Section 9.12; $35,000 to $60,000 for unit equipped with sample multiplexer and column program/backflush
- B7. $140,000 typical for an instrument equipped with a 64-channel stream multiplexer

Partial List of Suppliers:

3M (A1) (www.mmm.com)
ABB-Extrel (B7) (www.extrel.com)
Advanced Calibration Designs Inc. (A8) (www.auptag.com)
(A4) Alltech (www.alltechweb.com)

© 2003 by Béla Lipták

American Gas & Chemical Ltd. (A1, A2, B1) (www.amgas.com)
Analytical Technologies Inc. (A7, B1) (www.analyticaltechnologies.com)
Arizona Instruments (B3) (www.azic.com)
B&W Technologies Ltd. (A7, B1) (www.gasmonitors.com)
Bacharach Inc. (A7, B1) (www.bacharach-inc.com)
Boreal Laser (B2) (www.boreal-laser.com)
CDS Analytical Inc. (A6) (www.cdsanalytical.com)
CEA Instruments Inc. (A7, B1) (www.ceainstr.com)
Cole-Parmer Instrument Co. (A1, A2, A5, A7, B1) (www.coleparmer.com)
Control Instruments Corp. (B1) (www.controlinstruments.com)
Detector Electronics Corporation (B1) (www.detronics.com)
Draeger Safety Inc. (A2, A5, A7, B1, B2, B4) (www.draeger.com)
Dynatherm div. of CDS Analytical (A6) (www.dynatherm.com)
EcoChem Analytics (B2, B3, B4) (www.ecochem.biz)
Emerson Process, Process Analytic Div. (B2, B3, B4, B5, B6) (www.processanalytic.com)
Emerson Process, Tekmar Dohrmann Div. (A6) (www.tekmar.com)
Enmet Analytical Corp. (A7, B1) (www.enmet.com)
ESS (B7) (www.essco.com)
F&J Specialty Products Inc. (A3) (www.fjspecialty.com)
The Foxboro Co. (B2) (www.foxboro.com)
International Sensor Technology (A7, B1) (www.intlsensor.com)
Keco R&D Inc. (A8) (www.kecoinc.com)
KEM Medical Products (A1, A2) (www.kemmed.com)
Mine Safety Appliances (A2, A5, A7, B1, B2, B4) (www.msanet.com)
Radon Detection Systems Inc. (A3) (www.radondetectionsystems.com)
Scott Instruments (A7, B1) (www.scottinstruments.com)
Sensidyne Inc. (A2, A4, A5, A7, B1) (www.sensidyne.com)
Sierra Monitor Corp. (B1) (www.sierramonitor.com)
Supelco Inc. (A4, A6) (www.supelco.com)
SKC Inc. (A4, A5) (www.skcinc.com)
Thermo Environmental Instruments (A8, B4, B5) (www.thermoei.com)
Thermo Gas Tech (A7, B1) (www.gastech.com)
Thermo ONIX (B2, B3, B5, B6, B7) (www.thermoOnix.com)
Thomson Nielsen Electronics Ltd. (A3) (www.thomson-elec.com)
Universal Sensors & Devices Inc. (B1) (www.universalsensors.com)
VICI Metronics, GC Industries (A8) (www.gcind.com)
Zellweger Analytics, MDA Scientific Inc. (A7, B1, B2) (www.zelana.com/)

HAZARDOUS AND TOXIC ATMOSPHERES

Normal atmospheric oxygen content is slightly in excess of 20%. If the oxygen level is reduced below 10% in an atmosphere, either as a result of oxygen displacement or removal, simple asphyxiation can occur, causing death. This simple asphyxiation can be caused by any gas, including even otherwise nontoxic ones. Most commonly, this hazard exists in enclosed spaces where there is an opportunity of a gas leak or buildup that dilutes or displaces the oxygen in an area. If a person enters the area, unconsciousness and death can occur within minutes.

Occupational Safety and Health Administration (OSHA) regulations require that oxygen concentration in air not fall below 19.5% during an eight-hour workday.

Safety Instrument Performance Standards

The purpose of toxic gas detection is for personnel protection to warn against accidental exposure. Therefore, it is important that the instrumentation be reliable and perform accurately in the application. In the last decade, standards have been developed to ensure that detection instrumentation performs to a minimum set of specifications that will ensure adequate protection. These standards apply beyond those that might otherwise be applicable for hazardous area deployment.

ISA (formerly the Instrument Society of America) has developed a set of standards that are applicable to electrical instruments for the determination of common toxic gases in the context of personnel protection. At this writing, standards exist for hydrogen sulfide (ISA-92.0.01, Part 1–1998),[8] carbon monoxide (ANSI/ISA-92.02.01, Part 1–1998),[9] ammonia (ISA-92.03.01–1998),[10] oxygen deficient/enriched atmospheres (ANSI/ISA-92.04.01, Part 1–1996),[11] and chlorine (ISA-92.06.01–1998).[12]

In the European Union standard, EN 45544[13–16] defines the set of minimum requirements for electrical apparatus used for direct detection and measurement of toxic gases and vapors. This standard, unlike the ISA standards, is generic for all toxic gas and vapor species. The standard is divided into four parts. Part 1 describes general requirements. Part 2 describes requirements for instruments that respond in the

© 2003 by Béla Lipták

region of limit values. Part 3 describes requirements for apparatus designed for measuring concentrations well above limit values. Part 4 is a guide for selection, installation, use, and maintenance.

Factory Mutual Research Corporation (FMRC), at this writing, utilizes FM-6340/6341-Draft for performance approval of toxic gas detection instrumentation. Similar to the European Union standards, the standard provides a generic set of performance requirements irrespective of the toxic gas species.

Types and Levels of Toxicity

The mode of toxicity for some gases results from having a greater affinity for binding with blood hemoglobin than with oxygen. In this case, *chemical asphyxiation* occurs because of the displacement of the oxygen from the blood. Most notable in this category of toxic gases are carbon monoxide (CO) and hydrogen cyanide (HCN). In the case of CO, it is odorless and a nonirritant. If the exposure is chronic, death can result even if CO is present in relatively low concentrations.

The modes of toxicity for other toxic gases are varied. The toxin can be dissolved in body fluids and can be transported within the body to injure biological tissues and organs. The toxicity of a gas or vapor depends on its specific toxicity; on the efficiency and effectiveness at which it is absorbed, transported, and metabolized; and on exposure time.

To describe each gas' specific toxicity, threshold limit values (TLVs) have been established by the American Conference of Governmental Industrial Hygienists (ACGIH),[1] and permissible exposure levels (PELs) have been established by OSHA.[2] These values are generally measured as eight-hour time-weighted averages (TWAs), and the concentrations are expressed in parts per million (ppm).

It is customary to rate a substance with 100 to 1000 ppm exposure limits as moderately toxic, 10 to 100 ppm as highly toxic, and less than 10 ppm exposure limits as extremely toxic. The short-term exposure limit (STEL), which is generally 15 min, and the ceiling threshold limit value (TLV-C) of the concentration during any part of the working exposure have been established to limit exposures during short time periods. More details on the specific health effects of toxic substances can be found in the References 3 through 5.

Extreme Toxicity

Of greatest concern are extremely toxic gases and vapors. By convention, these are substances with TLV, PEL, STEL, or TLV-C values of 10 ppm or lower. A partial listing of gases and vapors with TLVs below 10 ppm is given in Table 8.59a. Literature is noted in Reference 6 describing how measurements should be taken and processed.

A couple of toxic gases deserve special mention because of their uniqueness. Mercury naturally occurs as the elemental metal. It is the only metal that is a liquid at room temperature and hence has significant vapor pressure. Mercury is widely used in industry as a catalyst and as an integral component in fluorescent lamps. Improper disposal of fluorescent lamps and inadvertent incineration provides an important pathway for mercury to enter the environment.

Mercury is a neurotoxin. The "mad hatters" of the nineteenth century suffered from mercury poisoning as a result of the mercury felting process that was prevalent at the time. In the U.S., the disease became known as the "Danbury shakes" because of the large number of hat makers in Danbury, Connecticut, who were afflicted with the disease. OSHA has established the PEL at 0.1 mg/m^3. AGGIH has established the recommended airborne exposure limit of mercury vapor at 0.05 mg/m^3 averaged over an eight-hour work shift.

Radon gas is a radioactive noble gas that occurs in nature through the radioactive decay of radium and uranium in soils. While it is chemically unreactive and hence nontoxic in that sense, it is radioactive and thought to be the leading cause of lung cancer after cigarette smoking.

Most emphasis on radon detection has been in the home and public building settings. The generally accepted maximum permissible level of radon in these facilities is 4 pCi/l.

TOXIC GAS MEASUREMENT

The measurement methodologies for toxic gases is, in a larger sense, a subset of the methodologies used for other industrial substances. The purpose of this section is not to restate the methodologies that are described elsewhere in this volume. The purpose here is to expand on the previous coverage from a safety and personnel protection perspective.

Related Sections

Toxic gases include carbon dioxide (Section 8.9), carbon monoxide (Section 8.10), combustibles (Section 8.16), hydrocarbons (Section 8.25), hydrogen sulfide (Section 8.26), mercury (Section 8.30), nitrogen oxides (Section 8.37), ozone (Section 8.44), sulfur oxides (Section 8.56), and many others. Their measurement and analysis have been discussed and is not repeated here.

Likewise, the measurement methodologies of IR analyzers (Section 8.27), mass spectrometers (Section 8.29), open path analyzers (Section 8.40), Raman spectroscopy (Section 8.51), UV and visible analyzers (Section 8.61), and wet chemistry analyzers (Section 8.66) are not repeated.

One notable exception is the electrochemical cells that are widely used for toxic gas detection. The discussion is expanded to cover positive flow and diffusion-type electrochemical sensors, because they play such a critical role in toxic gas detection systems. The relative merits of the various measurement techniques are also discussed.

CONTINUOUS SENSOR DESIGNS

Electrochemical cells have the advantage of simplicity, low cost, and reliability as compared to other technologies. Technologies such as flame ionization, mass spectrometric,

© 2003 by Béla Lipták

TABLE 8.59a
*Selected Toxic Gases and Vapors (10 ppm and below)**

Name of Element or Compound	*TLV-TWA, ppm*	*STEL, ppm*	*TLV-C, ppm*	*Human Carcinogenity Status***
Acetic acid (vinegar)	10		25	
Acrolein			0.1	A4
Acrylonitrile	2			A3
Aniline	2			A3
Arsine	0.05			
Benzene	0.5	2.5		A1
Biphenyl	0.2			
Boron trifluoride			1	
Bromine	0.1	0.2		
Bromine pentafluoride	0.1			
Bromoform	0.5			A3
1,3-Butadiene	2			A2
Carbon disulfide	10			
Carbon tetrabromide	0.1	0.3		
Carbon tetrachloride	5	10		A2
Carbonyl difluoride	2	5		
Chlorine	0.5	1		A4
Chlorine dioxide	0.1	0.3		
Chlorine trifluoride			0.1	
Chloroform	10			A3
bis-(Chloromethy)ether	0.001			A1
Diborane	0.1			
Dichloroacetylene			0.1	A3
Dimethyl hydrazine	0.01			A3
Dimethyl sulfate	0.1			A3
Ethylene oxide	1			A2
Fluorine	1	2		
Formaldehyde			0.3	A2
Germane	0.2			
Hydrazine	0.01			A3
Hydrogen bromide			3	
Hydrogen chloride			5	
Hydrogen cyanide			4.7	
Hydrogen fluoride			3	
Hydrogen selenide	0.05			
Hydrogen sulfide	10	15		
Methyl isocyanate	0.02			
Methyl mercaptan	0.5			
Naphthalene	10	15		A4
Nickel carbonyl	0.05			
Nitric acid	2	4		
Nitrobenzene	1			A3
Nitrogen dioxide	3	5		A4
2-Nitropropane	10			A3

© 2003 by Béla Lipták

TABLE 8.59a Continued
*Selected Toxic Gases and Vapors (10 ppm and below)**

Name of Element or Compound	TLV-TWA, ppm	*STEL, ppm*	*TLV-C, ppm*	*Human Carcinogenity Status***
Osmium tetroxide	0.0002	0.0006		
Oxygen difluoride			0.05	
Ozone	0.05 Heavy Work 0.1 Light Work			A4
Pentaborane	0.005	0.015		
Phenylhydrazine	0.1			A3
Phosgene	0.1			
Phosphine	0.3	1		
Phosphorus oxychloride	0.1			
Phosphorus pentachloride	0.1			
Phosphorus trichloride	0.2	0.5		
Silane	5			
Sodium azide			0.11	A4
Stibine	0.1			
Sulfur dioxide	2	5		A4
Sulfur tetrafluoride			0.1	
Tellurium hexafluoride	0.02			
Thionly chloride			1	
o,*p*-Toluidine	2			A3
Vinyl bromide	0.5			A2
Vinyl chloride	1			A1

*Abstracted from *2001–2002 Threshold Limit Values*, American Conference of Governmental Industrial Hygienists, 2001.
**Carcinogenicity: A1-Confirmed Human Carcinogen; A2-Suspected Human Carcinogen; A3-Confirmed Animal Carcinogen with Unknown Relevance to Humans; A4-Not Classifiable as a Human Carcinogen.

fluorescence, UV, and IR analyzers provide better sensitivity and/or specificity than do electrochemical sensors.

It is rare for an electrochemical sensor to have sensitivity lower than 1 ppm. Additionally, an electrochemical sensor may have significant cross sensitivity to other substances. In most instances, environmental factors limit the set of substances that are likely to present interference for any given sensor installation, so the sensor provides utility in spite of cross sensitivities.

On the other hand, electrochemical sensors tend to be more stable, selective, and sensitive than sensors built on metal oxide semiconductor (MOS) technology. Because most electrochemical sensors use aqueous-based chemistries, MOS sensors have found utility in environments of either extremely high or low humidity. In these environments, electrochemical sensors tend to either dry out quickly or absorb moisture, resulting in a shortened operating life.

When the sensitivity or specificity of electrochemical sensors is inadequate, or the number of toxic vapors is high, other methodologies must be used.

Chromatography

Chromatography has long been the workhorse of analytical measurements. The chromatograph coupled to an appropriate post column detector can be used for a myriad of toxic vapor detection applications. The chromatograph guarantees the selectivity, and the detector provides the sensitivity.

Detectors can range from the simple thermal conductivity types, to the increasing complexities of flame ionization and flame photometric types of detectors, and even to a mass or mass spectrometric detector. The latter detection scheme provides an additional dimension to the measurement by adding specificity and providing positive confirmation of the vapor composition resulting from the mass spectral fragmentation pattern while still providing quantitative information. Sometimes sample preconcentration techniques are also used to further increase the overall sensitivity of the measurement.

As the sophistication of the chromatography system increases, its cost also rises. Multipoint sampling systems have been developed to multiplex a single chromatograph

© 2003 by Béla Lipták

among a variety of samples. As a result, the cost of the individual measurements is reduced.

Chromatography is, however, slowly losing ground to methodologies that are thought to be more reliable, have lower maintenance, and not require the refilling of consumables. Today, optical technologies have advanced to the point at which they have become alternative detection methodologies. Advances in electronics, optics, and light source designs, including lasers, have served to improve the performance and reliability of the measurement while lowering the installed costs.

Spectrometers

The preference is strong for toxic gas monitors that use solid state technologies and have no moving mechanical parts. As a result, field-deployed instruments with warranties of up to five years are common.

Instruments based on nondispersive infrared (NDIR) absorption, infrared photoacoustic detection, pulsed ultraviolet fluorescence, and chemiluminescence measurements are all available. Fourier-transform IR and tunable diode laser spectrometers have also been utilized for high-sensitivity and high-specificity applications.

In the past decade, mass spectrometry has made tremendous strides. Once thought of as being a maintenance-intensive technology, its reliability has been greatly improved. Advancements in miniaturization have also reduced their size such that some specially designed devices are field portable and smaller than a suitcase.

Several mass spectrometer packages have been designed for ambient air monitoring. Instruments are generally available with 32- or 64-channel multistream sampling capability, which lowers the unit cost per detection point. Published detection limits for some organic vapors are listed in Table 8.59b.

TABLE 8.59b
*Mass Spectrometer Detection Limits with Typical Exposure Limits**

Compound	Detection Limit (ppm)	Typical Exposure Limit
Acrylonitrile	≤0.1	2 ppm OEL
Benzene	≤0.01	1 ppm OEL
Butadiene	≤0.1	10 ppm OEL
Carbon disulfide	≤0.01	10 ppm OEL
Chlorobenzene	≤0.01	50 ppm OEL
Epichlorohydrin	≤0.05	5 ppm OEL
Methyl iodide	≤0.01	5 ppm OEL
Trichloroethylene	≤0.05	100 ppm
Vinyl bromide	≤0.1	5 ppm
Vinyl chloride	≤0.1	5 ppm MEL

*Courtesy of Thermo ONIX.

Radon Detectors

The measurement of radon presents special detection challenges because of the low levels and general nonreactivity of the gas. Several very specialized methods have been approved by the USEPA for radon measurement.[7]

The more common methods are (1) adsorption of the gas on activated charcoal followed by gamma ray detection, (2) the use of alpha track detectors where radiation damage of a plastic sheet is measured, (3) monitoring the voltage reduction on an "electret" (electrically charged disk of Teflon®) as a result of exposure to radiation, and (4) continuous monitoring.

Proper placement of detectors and adherence to measurement protocols are necessary for meaningful results. Because of the very specialized nature of radon detection and measurement, the testing is most frequently contracted to laboratories that have demonstrated proficiency in this area.

Electrochemical Sensors

Electrochemical-based detection instruments employ cells that utilize the principles of coulometry or voltametry to effect the measurement (see also Section 8.4).

Electrochemical sensors based on these principles have progressed much in the last 30 years. They have reduced the instability caused by excessive noise and drift, improved sensitivity and specificity, increased the working life span of these instruments, and simplified their calibration procedures. The latest electrochemical monitors are usually microprocessor controlled, stable, and easy to calibrate.

Oxygen Detectors As discussed in Sections 8.4 and 8.42, oxygen detectors often use the fuel-cell amperometric detection principle. Essentially, such a device is a metal/air battery in which the amount of current delivered is a function of how fast oxygen can diffuse to the cathode through a mass-flow-limiting capillary tube. A schematic of a typical oxygen sensor is shown in Figure 8.59c.

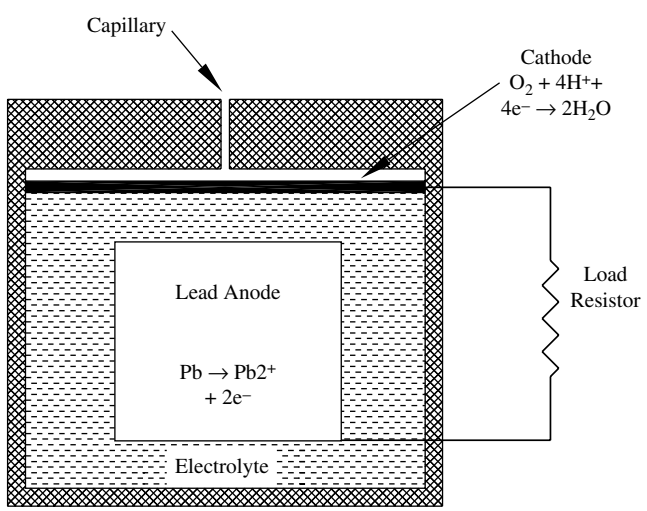

FIG. 8.59c
Diagram of mass-flow-limited oxygen sensor.

© 2003 by Béla Lipták

In these sensors, the current produced and, hence, the response to oxygen, is determined by the diffusion rate through the capillary. These sensors respond to the actual amount of oxygen available at the cathode and not the oxygen partial pressure. As a result, these sensors are sensitive to atmospheric pressure changes and can be adversely affected by pressure transients that occur as a matter of course in a sample system or when deployed in portable sensors.

Signal processing is employed in the sensor to minimize the effects of pressure transients. This same sensor can be used under a wider range of temperature variations, because the diffusion rate through the capillary is only weakly temperature dependent.[17]

Oxygen sensors can also use a Teflon-like membrane, similar to the technology used in dissolved oxygen electrodes for water analysis (Section 8.43). Sensors using this technology experience less output variation with pressure transients but are ten times more sensitive to temperature changes. On the other hand, because diffusion through a polymer membrane is slower than through a capillary, the response time (t_{90}) of partial pressure sensors is typically 20 to 40 sec, whereas it is between 5 and 10 sec for mass-flow-controlled sensors.

Amperometric Toxic Sensors Sensors for toxic vapors differ structurally from units that detect oxygen, but they still are electrochemical cells that operate in amperometric mode. These cells generate a current that is linearly proportional to the concentration of the gas present in the atmosphere.

The simplest form of an electrochemical cell is a two-electrode design, which consists of a semipermeable diffusion membrane, a reservoir of acid electrolyte, a sensing electrode, and a counter electrode. The toxic gas for which the cell was designed diffuses through the membrane and reacts at the working electrode, typically producing a number of H^+ ions as well as electrons. The H^+ ions travel through the electrolyte to the counter electrode while the electrons travel through the external circuit and combine with the ions at the counter electrode. The current produced and measured in the external circuit is directly proportional to the concentration of the toxic gas present.

In many cases, the electrolyte is an aqueous acid. In some instances, it may be an organic gel or in a solid state. Formulations have been improved to reduce hygroscopic effects in low- and high-humidity environments that can have a negative effect on the working life of the electrolyte. Lifetimes in the latest models frequently exceed two years.

Number of Electrodes Two-electrode sensors are inexpensive and perform adequately on less-demanding applications. For industrial applications, the three-electrode designs are dominant. The third electrode permits the potential between the counter and the working electrodes to vary. This provides optimal catalytic efficiency with the aid of external circuitry and results in a greatly improved cell sensitivity. Additionally, the linearity of response and dynamic range of the cell are improved.

A diagram outlining the operation of both the two- and three-electrode sensor designs is shown in Figure 8.59d. The reader is referred to References 18 and 19 for a detailed explanation of their operations.

Sensor Compensation and Life Toxic sensors respond to the partial pressure of the gas of interest, so the measured concentration will increase linearly with atmospheric pressure.

Toxic sensors also generally require a small amount of oxygen dissolved in the electrolyte for reactions at the counter electrode. As a consequence, the sensors should not be operated for long periods under anaerobic conditions. For short periods (10 min or less), the cell will operate without oxygen, because some dissolved oxygen will be present in the electrolyte. This situation is frequently exploited for sensor calibration, because compressed calibration gas with nitrogen can be used without fear of oxidation or reduction of shelf life.

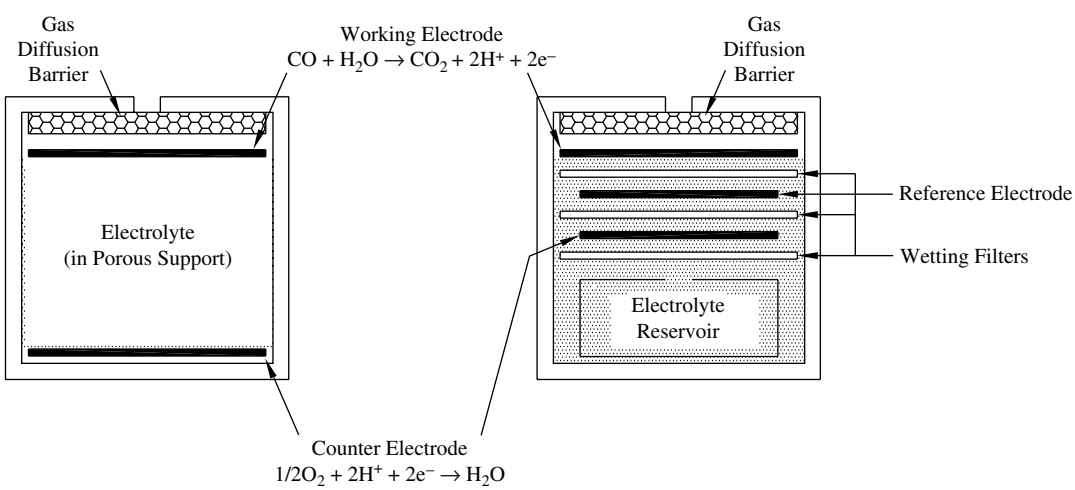

FIG. 8.59d
Diagram of two- and three-electrode sensor.

© 2003 by Béla Lipták

All electrochemical sensors rely on catalytic reactions that are either accelerated or slowed as the operating temperature rises. This results in both response time and sensitivity changes. Generally, the sensitivity change with temperature variation is very repeatable and can be compensated with software or circuitry. At low temperatures, the speed of response can become intolerably slow. When the temperature becomes too low (around −35°C), the electrolyte can freeze, causing permanent damage to the cell.

The lifetime of the sensor is strongly dependent on relative humidity (RH) of the environment. The classic electrolyte in toxic sensors is generally 5 molar aqueous sulfuric acid. This concentration of acid generates 65% RH. For atmospheric RH above or below this level, the sensor will either absorb water or lose water to evaporation. Sensors can tolerate humidity variations between 15 and 90% RH. When the RH in the environment is over 90%, the cell will absorb moisture, and the electrolyte reservoir may eventually overflow, causing the cell to burst. Below 15% RH, the sensor will continue to lose moisture until there is not enough electrolyte for efficient ion transport, and the cell will fail for that reason.

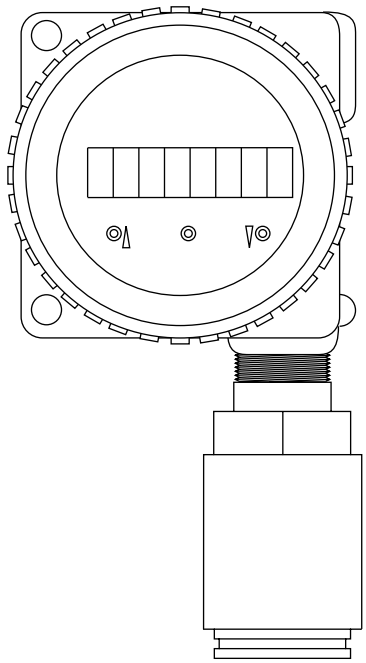

FIG. 8.59e
Physical appearance of an electrochemical or semiconductor-type sensor module with display, alarm indicators, and 4 to 20 mA outputs in an explosion-proof housing. (Courtesy of Detector Electronics Corp.)

Fixed Detectors

Electrochemical sensors are used in many permanent installations of toxic gas detectors. These sensors are designed for industrial use and frequently carry hazardous area approvals. Electrochemical sensors are also available with explosion-proof housings that are suitable for deployment in Class 1, Division 1 and CENELEC Zone 1 hazardous areas. Figure 8.59e shows a typical industrial detector with an explosion-proof housing.

Because of the low power requirements of the sensing element, these detectors are frequently designed to be intrinsically safe. Such designs operate on such low power as to be incapable of initiating an explosion. Intrinsically safe detectors tend to be less costly than the ones requiring explosion-proof housing, because they can utilize molded plastic housings rather than the bulky and expensive explosion-proof housings.

Most fixed detectors transmit their readings to the associated control and alarm system using 4 to 20 mA current loop. Usually, detectors that are designed for intrinsically safe operation are powered from a 4 to 20 mA current loop, which reduces the number of wires that must be installed. In the past decade, the low-cost, low-power, high-reliability, spread-spectrum radio telemetry systems found increasing acceptance for communications with central alarm systems.

Alternatively, if a central alarm system is not available, several detector models are available that provide self-contained alarming devices or provide strobe lights, sounders, and relays in addition to the 4 to 20 mA transmission signal loop. Figure 8.59f illustrates a toxic gas detector with built-in alarms.

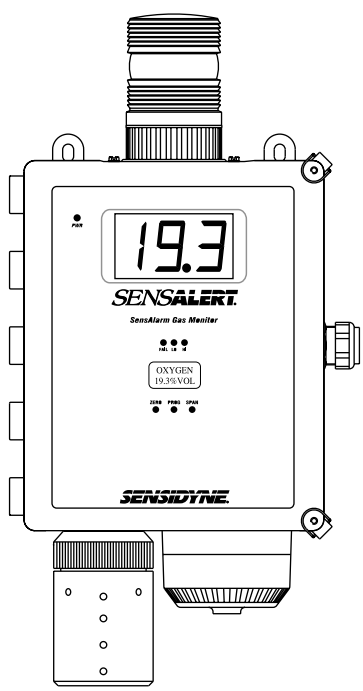

FIG. 8.59f
Illustration of an electrochemical sensor module with display, relay, sounder, and strobe to indicate alarms. (Courtesy of Sensidyne Inc.)

© 2003 by Béla Lipták

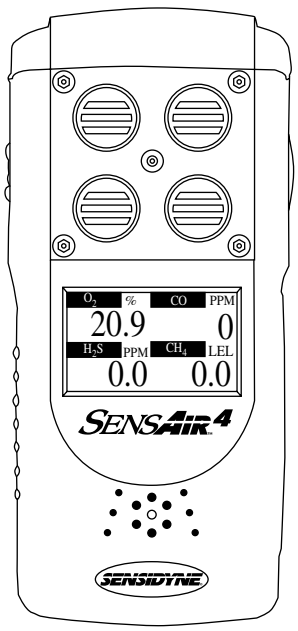

FIG. 8.59g
Typical pocket-sized portable electrochemical detector configured for four individual channels of detection. (Courtesy of Sensidyne Inc.)

Portable Detectors

Electrochemical (and semiconductor) sensors are also available in pocket-sized, battery-powered personal monitors and in portable analyzers. Pocket-sized personal monitors are inexpensive and fast (t_{90} in around 20 sec). In addition to indicating toxic gas concentrations, they are provided with alarms and outputs set to actuate when OSHA limits are reached.

Some personal monitors can simultaneously detect several toxic gases. A typical sensor combination might consist of detectors for combustibles (typically, a low-power pellistor bead), for low oxygen, and for high CO and H_2S concentrations (electrochemical cells), for a total of four measurement channels. The sensors have a useful life of as long as two years and are inexpensive to replace. A typical multichannel portable detector is shown in Figure 8.59g. A partial list of available sensor types, their alarm set points, and inaccuracies is provided in Table 8.59h.

DISCONTINUOUS DOSAGE SENSORS

The dosimeters in use include the various color-changing badges, direct reading tubes, and various sorption devices. Each is briefly described in the paragraphs below.

Color Change Badges

These badges are worn by workers and serve to monitor their exposure to hazardous chemicals. Depending on the type of badge, the exposure period can be from 15 min to 8 hr. These badges register the time-weighted average exposure level.

Table 8.59i lists some of the available badges and badge holders. The color change of an exposed badge can be self-developing, or the badge may need to be treated with a developing reagent. The color change can be interpreted by comparison to a color chart or by the use of electronic monitors.

TABLE 8.59h
*Typical Range, Sensitivity, and Alarm Set Points of Portable Personal Protection Monitors**

Gas	*Range*	*Resolution*	*Alarm Setpoints (low/high)*
O_2	0–30%	0.1%	19.5/23.5%
CO	0–500 ppm	1 ppm	35/200 ppm
H_2S	0–100 ppm	1 ppm	10/20 ppm
SO_2	0–20 ppm	1 ppm	2/10 ppm
NO	0–250 ppm	1 ppm	25/50 ppm
NO_2	0–20 ppm	0.1 ppm	1/10 ppm
NH_3	0–50 ppm	1 ppm	25/50 ppm
PH_3	0–5 ppm	0.1 ppm	1/2 ppm
Cl_2	0–10 ppm	0.1 ppm	0.5/5 ppm
HCN	0–100 ppm	1 ppm	4.7/50 ppm

*Abstracted from Cole-Parmer Catalog 2001/02, 2001.

Continuous Color-Change Monitor Continuous color-change concepts have also been employed to build continuous toxic gas monitors (Figure 8.59j) using a chemically treated tape that is incrementally exposed to the sample gas. If the gas of interest is present in the sample, the tape is *stained*, and the degree of staining is detected by measuring the reduction in the reflected light from the tape.

This spectrophotometric approach, coupled with microprocessor technology, is capable of detecting toxic gas concentrations in the ppb range and proving response times of under 30 sec. More than 50 toxic gases are detectable by this technique. A partial list of such detectable gases and their minimum concentrations is provided in Table 8.59k.

Color Detector (Dosimeter) Tubes

Color detector tubes (CDT)[21,22] are devices used for estimating toxic gas and vapor concentrations with an overall accuracy of ±25%. A hand-operated suction device pulls a predetermined amount of air sample through the CDT, and the color progression on the packed sorption bed (which is impregnated with a color-changing indicator material) registers the concentration of the particular toxic gas.

The purpose of these devices is to estimate concentrations before more accurate monitoring is performed. Concentrations by the color-band progression can be read within a few minutes. The disposable CDTs are relatively inexpensive, and

© 2003 by Béla Lipták

TABLE 8.59i
*Personal Monitoring Toxic Gas Exposure Badges**

Analyte	*Range (ppm x hr)*	*Minimum Detectable Concentration in 8 hr.*	*Interferences*
Acetone	20–24,000	2.5 ppm	NH_3, MEK, MIBK, MPK
Ammonia	4–300	0.5 ppm	RNH_2
Carbon disulfide	0.5–30	0.06 ppm	H_2S**
Corbon monoxide	10–525	1.25 ppm	Alkenes, H_2, H_2S
Chlorine	0.4–13	0.05 ppm	Br_2, I_2, HCl
Chlorine dioxide	0.1–1.4	0.013 ppm	NO_2
Ethanol	62–7,360	7.75 ppm	ROH, DMS
Formaldehyde	0.3–12	0.04 ppm	Acrolein
Glutaraldehyde	STEL (15 min)	0.04–0.95 ppm	None Known
Hydrazine	0.01–0.8	0.002 ppm	Aromatic Amines, MMH
Hydrogen sulfide	1–240	0.13 ppm	None Known
Mercury	0.125–1.6 $mg/m^3 \times hr$	0.02 mg/m^3	Strong Oxidizers
Methanol	27–3200	3.38 ppm	ROH, DMS
Methyl ethyl ketone****	18–21,600	2.25 ppm	NH_3, acetone, MIBK, MPK
Methyl isobutyl ketone****	16–19,200	2.0 ppm	NH_3, MEK, Acetone, MPK
Nitrogen dioxide	0.5–13	0.06 ppm	O_3
Ozone	0.08–1.6	0.01 ppm	H_2O_2, NO_2***
Sulfur dioxide	0.1–16	0.013 ppm	None Known

*Courtesy of K&M Environmental Inc.
**3 ppm H_2S causes color development in cell 1, 10 ppm H_2S causes color development in cell 2.
***Ozone monitor is ten times more sensitive to ozone than to nitrogen dioxide.
****Coefficient must be applied to scale printed on badge.

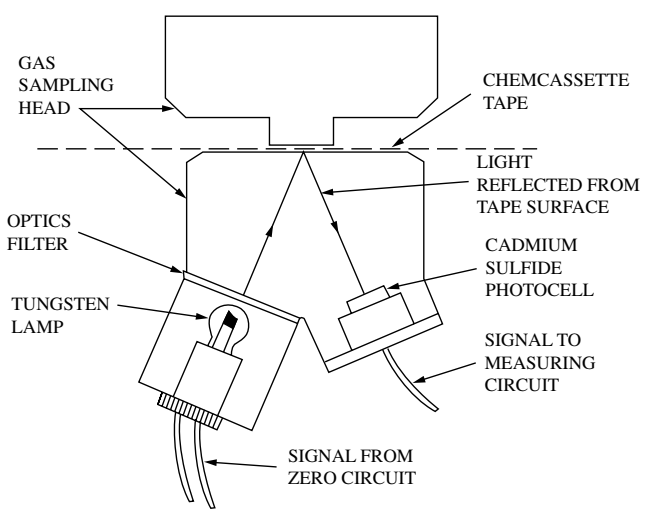

FIG. 8.59j
By monitoring the reflected light intensity from a chemically treated tape, toxic gas concentrations in the ppb range are detected. (Courtesy of MDA Scientific Inc.)

a wide variety of some 250 different tubes are available. Table 8.59l lists some of the available tubes.

Dosimeter tubes are also available in diffusion-based designs. They are used by snapping off the prescored end of the tube and a colored line of demarcation results in front of a scale that is labeled in units of ppm-hours of exposure. Figure 8.59m describes the tube, and Table 8.59n lists the ranges and other data for some available units.

Sorption-Type Dosimeters

These devices absorb the toxic gases either passively (as a result of diffusion) or actively (when an air sample is pulled through them). After some period of exposure, the quantity of toxic gases that have been accumulated by them is measured. This is done by removing the devices and applying heat or solvent to desorb the toxic material.

Personnel dosimeters are either liquid filled or solid filled. The former usually requires wet chemical treatment before it can be analyzed for formaldehyde, ethylene oxide, and other substances, usually by a spectrophotometer. In this case, the time-consuming preparation requirement is a disadvantage (except for the direct-indicating types, which need no preparation or analyzer but are also less accurate). The time delay can be especially bothersome if the dosimeter has to be mailed to a laboratory for analysis.

Passive Personal Dosimetry Passive personal dosimetry (diffusion) is most valuable for double-checking monitoring

© 2003 by Béla Lipták

TABLE 8.59k
*Substances Detectable by the Continuous Toxic Gas Monitor**

Substance	*Standard Range*	*Lower Detectable Limit*
Ammonia	0–250 ppm	1 ppm
Chlorine	0–10 ppm	0.2 ppm
Diisocyanates	0–200 ppb	1 ppb
Hydrazines	0–1000 ppb	10 ppb
Hydrides	0–1000 ppb	3 ppb
Arsine	0–1000 ppb	2 ppb
Diborane	0–2000 ppb	50 ppb
Germane	0–1000 ppb	15 ppb
Hydrogen selenide	0–3000 ppb	5 ppb
Phosphine	0–50 ppm	2 ppm
Silane		
Hydrogen chloride	0–100 ppm	0.2 ppm
Hydrogen cyanide	0–100 ppm	0.8 ppm
Hydrogen fluoride	0–30 ppm	0.5 ppm
Hydrogen sulfide	0–50 ppm	0.5 ppm
Nitrogen dioxide	0–50 ppm	0.5 ppm
Phosgene	0–1000 ppb	12 ppb
p-Phenylene diamine	0–200 ppb	2 ppb
Sulfur dioxide	0–20 ppm	0.1 ppm

*Courtesy of MDA Scientific Inc.

TABLE 8.59l
*Features and Capabilities of Color-Changing Dosimeter Tubes**

Description	*Measuring Range (ppm)*	*Typical Applications*	*Shelf Life (yrs)*
Ammonia (NH_3)	50 to 900	Process control	3
Ammonia (NH_3)	10 to 260	Industrial hygiene, leak detection	3
Benzene (C_6H_6)	5 to 200	Industrial hygiene	1
Carbon dioxide (CO_2)	0.05 to 1.0%	Air contamination, concentration control	2
Carbon monoxide (CO)	10 to 250	Blast furnace, garage, combustion	1
Hydrogen sulfide (H_2S)	100 to 2000	Industrial raw gases, metallurgy	3
Hydrogen sulfide (H_2S)	3 to 150	Metal/oil refinery, chemical lab	3
Methyl bromide (CH_3Br)	5 to 80	Insert fumigation for mills, vaults, etc.	1
Nitrogen dioxide (NO_2)	0.5 to 30.0	Arc welding, acid dipping of metal products	1
Sulfur dioxide (SO_2)	20 to 300	Metal refining, waste gas analysis	2
Smoke tubes	—	Ventilation/air flow determination	—

*Courtesy of Cole-Parmer Instrument Co.

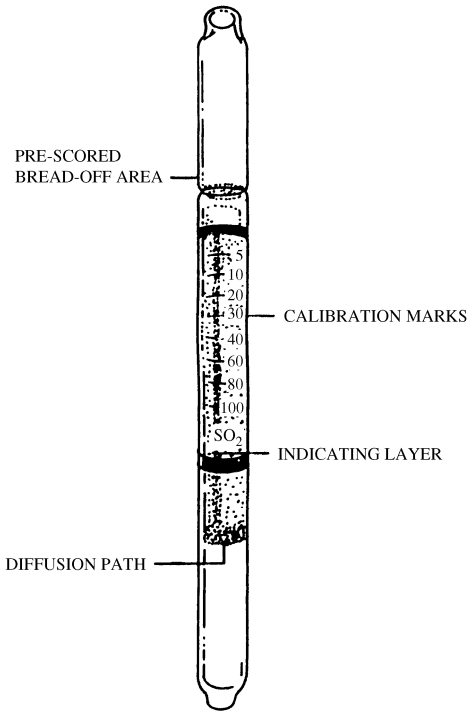

FIG. 8.59m
Diffusion-type dosimeter tube. (Courtesy of Sensidyne Inc.)

data or for calibration. It is also useful when seeking concentration estimates before more elaborate instruments are procured. The solid-filled personnel dosimeters have to be desorbed (by solvents or, more and more frequently, by heat) for gas chromatographic or other instrumental analysis.

Their normal usage includes double-checking calibrations, determining sensitivity ranges of instruments, calculating useful flow rates and sampling-time duration for active sampling devices, and making approximate measurements before stationary instruments are obtained.

Active or Dynamic Sampling Active (also called dynamic) personnel sampling devices also need thermal desorption or wet chemical treatment after sample collection, but they do not rely on diffusion as do passive personnel dosimeters. In active dosimeters, an air-sampling pump continuously passes a known amount of air through the sorbent material. Components of the pure air pass through the sorbent while toxic gases and vapors are held back on the high surface area of the sorbent material. The sorbent material can be either liquid or solid.

Liquid and Solid Fillings Liquid-filled absorption devices are called *impingers*. They are fragile and therefore sensitive to mistreatment, and they are more troublesome to use than solid sorbent tubes. They can also cause injuries if the liquid leaks out.

Solid-filled active sampling devices (also called adsorptive, sorptive, or sorption tubes) are less sensitive to mistreatment

© 2003 by Béla Lipták

TABLE 8.59n
*Diffusion-Type Dosimeter Tubes**

Gas or Vapor to be Measured	*Chemical Formula*	*TLV-TWA (ACGIH)*	*Range (PPM × hours)*	*Color Change*
Carbon monoxide	CO	50 ppm	50–1000	Yellow-dark brown
Hydrogen sulfide	H_2S	10 ppm	10–200	White-dark brown
Sulfur dioxide	SO_2	2 ppm	5–100	Green-yellow
Hydrogen cyanide	HCN	10 ppm	10–200	Orange-red
Ammonia	NH_3	25 ppm	25–500	Purple-yellow

*Courtesy of Sensidyne Inc.

Table 8.59o
*Adsorbent Tubes for Trapping and Thermally Desorbing Organic Compounds**

Absorbent Tube	*Application*	*Thermal Desorption Unit*
Carbotrap 100	C5–C12 Hydrocarbons	Dynatherm Tekmar CDS Analytical
Carbotrap 150	PCBs, PNAs, Alkyl benzenes, etc.	Dynatherm
Carbotrap 200	C2–C14 Hydrocarbons	Dynatherm
Carbotrap 300	EPA Methodologies TO-1, TO-2, TO-3 and other organics	Dynatherm Tekmar CDS Perkin Elmer
Carbotrap 370	C5–C30 Organics	Supelco

PCB = Polychlorinated biphenyls.
PNA = Polynuclear aromatic hydrocarbons.
EPA = Environmental Protection Agency.
*Abstracted from Supelco Chromatography Products, 1997.

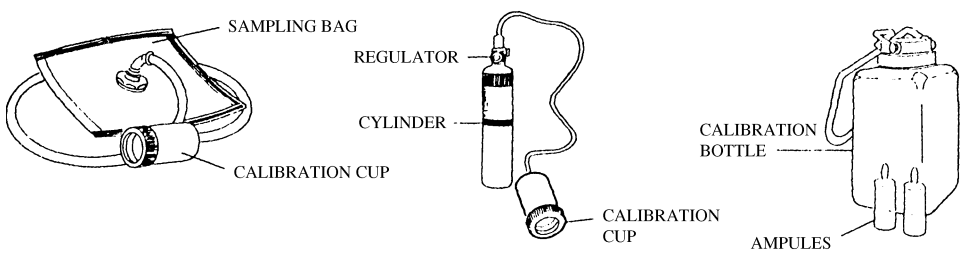

FIG. 8.59p
Accessories used in calibrating electrochemical toxic gas sensors. (Courtesy of Sensidyne Inc.)

than are impingers. The most frequent problem with these devices is breakthrough, which is a loss of the sorbed toxic gas (desorption), especially if flow rates are too high and/or sorption times are too long. These solid sorbent-filled trapping devices rely on surface adsorption rather than solution absorption.

Table 8.59o lists a number of sorption tubes with different packing solids. Although they can be desorbed by liquid solvents and injected as liquid samples into a gas chromatograph, thermal desorption can also be used by injecting the desorbed sample directly into a gas chromatograph as a vapor or gas. Sometimes, cold traps are also used before injecting, which can concentrate or focus the sample before thermal desorption and injection.

In addition to carbon-based sorption-tube fillings, which are listed in Table 8.59o, alumina, silica gel, Tenax®, and many other gas-solid-chromatography (GSC) packing materials can also be used.

CALIBRATION

Toxic gas and toxic vapor monitors are only as good as is their calibration. Electrochemical sensors can be calibrated by prepared gas concentrations that are stored in pressurized gas cylinders, sampling bags, or calibration bottles (Figure 8.59p). Although high-pressure calibrating gas mixtures are commonly used, their reliability decreases with increasing shelf life and decreasing concentrations. Sorption, chemical reactions,

© 2003 by Béla Lipták

diffusion, and heavy component settling by gravity can also reduce their reliability. Even stainless steel containers and periodic rolling cannot eliminate all the problems; therefore, alternative methodologies are preferred.

Low-pressure static gas mixtures in mixing bags or in rigid containers have the same problems in addition to having very limited capacities. They are still useful when used in syringe calibration for gas chromatography but are practically useless as continuous or semicontinuous calibration gas supplies.

Dynamic Calibrators

Dynamic calibrators operating on the permeation tube principle[24] have been available for decades. The availability of a large number of gases and vapors (about 100 different toxic components) and the relatively high accuracy (±2%) of these systems place permeation systems among the most popular calibrating devices.

Bubbler/Dilution Calibrator Another dynamic calibrator is the bubbler/dilution calibrator. In this design, instead of a permeation chamber, a bubbler or impinger is used. If the gas or vapor of interest is a liquid at 32°F (0°C), an ice/water bath can be used to provide temperature control.

The air is slowly bubbled through the liquid so that the air is saturated by the vapor of the liquid at the controlled temperature. The known flow rate of the saturated air can then be diluted by pure air. The bubbler liquid's vapor pressure can be calculated or can be taken from a handbook.[25] The concentration of the yet undiluted stream can be calculated by Equation 8.59(1).

$$C\% = (100 \times \text{vapor pressure of the liquid})/(\text{total atmospheric pressure}) \qquad \textbf{8.59(1)}$$

To increase accuracy, the same pressure sensor should be used to detect both the vapor and the atmospheric pressure. If the concentration is too high (it usually is), dilution by a large flow of pure air is necessary.

Electrochemical Calibrating Gas Generators A novel way of providing calibrating gases is to use electrochemical calibrating gas generators. They consist of electrochemical cells that provide coulometrically controlled quantities of specific gases that can be mixed into a fixed air flow. Accuracy is ±10%. Chlorine, chlorine dioxide, hydrogen, hydrogen cyanide, hydrogen sulfide, and ozone calibration gas generators are all available.

Some electrochemical detectors are also available with built-in gas generators so that bump tests can be performed automatically in the field to ensure detector operational integrity. Because, for the purposes of bump testing, absolute accuracy is not important, cross sensitivities can be utilized for testing cell integrity. Detectors with automatic sensor testing are available for bromine, chlorine, chlorine dioxide, fluorine, ozone, ammonia, carbon monoxide, hydrogen chloride, hydrogen cyanide, hydrogen fluoride, hydrogen sulfide, nitrogen dioxide, sulfur dioxide, and iodine.

Because calibration always involves toxic gases, all such procedures must be executed in well ventilated areas, preferably inside high-efficiency exhaust hoods.[24]

References

1. *2001–2002 Threshold Limit Values,* American Conference of Governmental Industrial Hygienists, Cincinnati, OH, 2001.
2. *Air Contaminants—Permissible Exposure Limits,* Standard 29 CFR 1910.1000, Occupational Safety and Health Administration, U.S. Government Printing Office, Washington, D.C., 1997.
3. Blumenthal, D. S., *Introduction to Environmental Health,* Springer, New York, 1995.
4. Sax, N. I. and Lewis, R. J., *Rapid Guide to Hazardous Chemicals in the Workplace,* Van Nostrand Reinhold, New York, 1994.
5. *Pocket Guide to Chemical Hazards,* National Institute for Occupational Safety and Health, U.S. Government Printing Office, Washington, D.C., 1997.
6. Sydenham, P. H. et al., *Introduction to Measurement Science and Engineering,* John Wiley & Sons, Chichester, England, 1989.
7. USEPA Office of Air and Radiation*, Indoor Radon and Radon Decay Product Measurement Protocols,* EPA 402-R-92–004, July 1992 (revised).
8. ISA-92.0.01, Part 1–1998, *Performance Requirements for Toxic Gas Detection Instruments: Hydrogen Sulfide,* ISA, Research Triangle Park, NC, 1998.
9. ANSI/ISA-92.02.01, Part 1–1998, *Performance Requirements for Carbon Monoxide Detection Instruments* (50–1000 ppm Full Scale), ISA, Research Triangle Park, NC, 1998.
10. ISA-92.03.01–1998, *Performance Requirements for Ammonia Detection Instruments* (25–500 ppm), ISA, Research Triangle Park, NC, 1998.
11. ANSI/ISA-92.04.01, Part 1–1996, ISA, Research Triangle Park, NC, 1996.
12. ISA-92.06.01–1998, *Performance Requirements for Chlorine Detection Instruments* (0.5–30 ppm Full Scale), Research Triangle Park, North Carolina, 1998.
13. BSi, BS EN 45544–1:2000 Workplace atmospheres—Electrical apparatus used for the direct detection and direct concentration measurement of toxic gases and vapours—Part 1: General requirements and test methods, London, England, 2000.
14. BSi, BS EN 45544–1:2000 Workplace atmospheres—Electrical apparatus used for the direct detection and direct concentration measurement of toxic gases and vapours—Part 2: Performance requirements for apparatus used for measuring concentrations in the region of limit values, London, England, 2000.
15. BSi, BS EN 45544–1:2000 Workplace atmospheres—Electrical apparatus used for the direct detection and direct concentration measurement of toxic gases and vapours—Part 3: Performance requirements for apparatus used for measuring concentrations well above limit values, London, England, 2000.
16. BSi, BS EN 45544–1:2000 Workplace atmospheres—Electrical apparatus used for the direct detection and direct concentration measurement of toxic gases and vapours—Part 4: Guide for selection, installation, use, and maintenance, London, England, 2000.
17. Application Note AAN 009–01, *How Oxygen Sensors Work*, Alphasense Ltd., Great Dunmow, UK, August 2001.
18. Manual 1.0, *Operating Toxic Gas Cells,* Sixth Sense, Poole, UK, 2002.
19. Application Note AAN 009–01, *How Toxic Sensors Work,* Alphasense Ltd., Great Dunmow, UK, August 2001.

© 2003 by Béla Lipták

20. Cole Parmer Catalog 2001/02, Cole Parmer Instrument Company, Vernon Hills, IL, 2001.
21. Sensidyne Detector Tube Selection Guide, Sensidyne, Inc. Largo, FL, 2002.
22. Draeger Tube and CMS Handbook, Draeger Gmbh, Leubeck, Germany, 2002.
23. Supelco Chromatography Products 1997, Supelco Inc., Belefonte, PA, 1997.
24. Lodge, J. P., Ed., *Methods of Air Sampling and Analysis,* Lewis Publishers, Boca Raton, FL, 1989.
25. Lide, D. R. et al., Eds., *CRC Handbook of Chemistry and Physics,* 83rd ed., CRC Press, Boca Raton, FL, 2002.

Bibliography

ACGIH, *Air Sampling Instruments for Evaluation of Atmospheric Contaminants,* 9th ed., American Conference of Governmental Industrial Hygienists, Cincinnati, OH, 2001.

AIHA, *Direct Reading Colorimetric Indicator Tubes Manual,* 2nd ed., American Industrial Hygiene Association, Akron, OH, 1993.

AIHA, *Fundamentals of Analytical Procedures in Industrial Hygiene,* American Industrial Hygiene Association, Akron, OH, 1987.

AIHA, *Manual of Recommended Practice for Combustible Gas Indicators and Portable, Direct-Reading Hydrocarbon Detectors,* 2nd ed., American Industrial Hygiene Association, Akron, OH, 1993.

AIHA, *Manual of Recommended Practice for Portable Direct-Reading Carbon Monoxide Indicators,* American Industrial Hygiene Association, Akron, OH, 1985.

AIHA, Workplace Environmental Exposure Level Guide Series, full set of 109 individual guides on toxic chemicals, American Industrial Hygiene Association, Akron, OH, 1979 to 2002.

ASHRAE, Standard 110–1995, *Method of Testing Performance of Fume Hoods,* American Society of Heating, Refrigerating, and Air-Conditioning Engineers, Atlanta, GA.

Bretherick, L., *Bretherick's Handbook of Reactive Chemical Hazards,* Butterworth-Heinemann, Burlington, MA, 1999.

Calabrese, E. J. and Kenyon, E., *Air Toxics and Risk Assessment,* Lewis Publishers, Boca Raton, FL, 1991.

Cullis, C. F. et al., *Detection and Measurement of Hazardous Gases,* Butterworth-Heinemann, Burlington, MA, 1981.

Draeger Tube and CMS Handbook, Draeger Gmbh, Leubeck, Germany, 2002.

Nagda, N. L. et al., *Guidelines for Monitoring Indoor Air Quality,* Taylor & Francis, New York, 1987.

Ness, S. A., *Air Monitoring for Toxic Exposures, An Integrated Approach,* John Wiley & Sons, New York, 1991.

NIOSH Manual of Analytical Methods, 4th ed., Vols. I and II, DIANE Publishing, Washington, D.C., 1990.

NIOSH Manual of Analytical Methods: Supplement; two volumes, 4th ed., BPI Information Services, 1996.

Proctor, N. H. et al., *Chemical Hazards of the Workplace,* John Wiley & Sons, New York, 1996.

Rappaport, S. M. and Smith, T. J., *Exposure Assessment for Epidemiology and Hazard Control,* Lewis Publishers, Boca Raton, FL, 1991.

Shaw, A. et al., The Use of Online Respirometric Monitoring, WEFTEC 2001 Conference, Water Environment Federation, Alexandria, VA, 2001.

Web Links to Government Agencies

www.acgih.org/ American conference of Governmental Industrial Hygienists. For over 60 years, ACGIH has been a well respected organization for individuals in the industrial hygiene and occupational health and safety industry.

www.aiha.org/ American Industrial Hygiene Association. Provides standards of ethical conduct for industrial hygienists.

www.atsdr.cdc.gov/atsdrhome.html Agency for Toxic Substances and Disease Registry. An agency of the United States Department of Health and Human Services.

www.ccohs.ca/ The Canadian Centre for Occupational Health & Safety. Canada's national center for health and safety information.

www.csa-international.org/ The Canadian Standards Association.

www.epa.gov/ United States Environmental Protection Agency.

www.nihs.go.jp/GINC/ Global Information Network on Chemicals. Useful information on hazardous substances.

www.isa.org/ ISA—The Instrumentation, Systems and Automation Society.

www.safetycentral.org/isea International Safety Equipment Association.

www.msha.gov/ The Mine Safety and Health Administration. A United States Government agency regulating the mining industry.

www.cdc.gov/niosh/homepage.html The National Institute for Occupational Safety and Health.

www.cdc.gov/niosh/npg/pgdstart.html Electronic NIOSH Pocket Guide to Chemical Hazards.

www.nsc.org/ National Safety Council.

www.osha.gov/ The Occupational Safety & Health Administration. A government agency that regulates to protect against occupational hazards.

www.seinet.org/ Safety Equipment Institute.

www.sira.co.uk/ Europe's leading independent research and technology organization in imaging and intelligent systems.

www.bsi-global.com British Standards Institute.

www.fmglobal.com Factory Mutual Global. A commercial insurance company with a research division that is an approval agency.

www.ul.com/ Underwriters Laboratories, Inc., an approval agency.

www.nist.gov/srm National Institute of Standards and Technology. Standard reference materials.

© 2003 by Béla Lipták

8.60 Turbidity, Sludge, and Suspended Solids

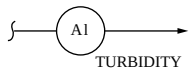

Flow Sheet Symbol

A. BRODGESELL (1969, 1982) **B. G. LIPTÁK** (1995, 2003)

Types:	Laboratory units can be manual or flow-through types; industrial turbidity transmitters in the process industry are available in both probe and flow-through designs.
Design Pressures:	Up to 250 PSIG (17 barg)
Design Temperatures:	250°F (120°C) standard; 450°F (232°C) special
Construction Materials:	Stainless steel, glass, plastics
Ranges:	In ppm silica units, from 0–0.5 to 0–1000 Backscattering designs available from 10–5000 ppm up to 5–15% Ranges in JTU units from 0–0.1 to 0–10,000 In NTU units, from 0–1 to 0–200 In FTU units, from 0–3 to 0–1000 Sludge density probe with reciprocating piston has a range from 0–0.1 to 0–10% of suspended solids
Inaccuracy:	0.5 to 2% of full scale for most designs, 5% of full scale for the reciprocating piston probe type suspended solids sensor, which is used on sludge applications
Costs:	Standard reference solutions for calibration cost $100 per bottle; laboratory turbidity meters cost from $750 to $2000; laboratory nephelometers with continuous-flow attachment cost $2000; industrial turbidity transmitters cost from $2500 to $5000, depending on features and materials of construction. Sludge-density-detecting, self-cleaning probe with internal reciprocating piston and indicating transmitter costs $7500; ultrasonic suspended solids transmitters are $5000 to $6000.
Partial List of Suppliers:	For additional manufacturers, refer to Chapter 6, on density measurements, and Section 8.15, on colorimeters. ABB Process Automation (www.abb.com) BTG, a Titan Co. (www.btg.com) Cole-Parmer (www.coleparmer.com) Elektrobit Ltd., Kajaani Services (www.elektrobit.fi) Foxboro-Invensis (www.foxboro.com) GLI International Inc. (www.gliint.com) HF Scientific Inc. (www.hfscientific.com) Honeywell (www.honeywell.com) Interocean Systems Inc. (www.interoceansystems.com) Kernco Instrument Co. (www.kerncoinstr. com/) Markland Specialty Engineering Ltd. (www.sludgecontrols.com) Maselli Measurements Inc. (www.maselli.com) McNab (www.themcnab.com) Monitek (www.monitek.com) Ohmartvega Corp (www.ohmartvega.com) Photronic Devices (www.photronicdevices.com) Rosemount Inc. (www.rosemount.com) Sigrist Process Photometer (www.photometer.com)

© 2003 by Béla Lipták

Turner Designs (www.turnerdesign.com)
Wedgewood Technology (www.wedgewoodtech.com/)

INTRODUCTION

In the area of turbidity measurement, there is some overlap between the coverage of this section and of Section 8.15, which covers colorimeters. Similarly, the discussion of sludge and suspended solids measurements in this section does have some overlap with the discussion of the various densitometer designs in Chapter 6.

Turbidity meters (similarly to the nephelometers discussed in Section 8.46) measure the cloudiness of a fluid by detecting the intensity of transmitted or reflected light. The cloudiness detected by turbidity meters is caused by finely dispersed suspended particles that, when exposed to a visible or infrared (IR) light, will scatter it. The cloudier the process fluid (the higher its turbidity), the more scattering will occur and therefore the less light will be transmitted through a sample. If the sensor photocell is placed at a 90° angle to the light path, the cloudier the process fluid, the more scattered light it will detect.

Light Absorption and Scattering

The turbidity meter detects light scattering, but the colorimeter measures light absorption (Figure 8.60a). If a liquid has no color at all, and the attenuation of light intensity is the result only of the scattering effect of solid particles, a colorimeter (Section 8.15) can also be used to detect turbidity. All that is needed is to convert from the standard units of colorimetry (0 to 100% transmittance or 0 to 2 absorbance) into turbidity units.

Other analyzers can also be used to detect turbidity. For example, sludge density measurements (Section 6.7) can also be converted into turbidity units. Similarly, consistency readings (Section 8.18), which are normally in units of weight percent of solids, can also be expressed in turbidity units. Figure 8.60b illustrates such a consistency meter, which operates with reflected IR light transmitted over optical fibers.

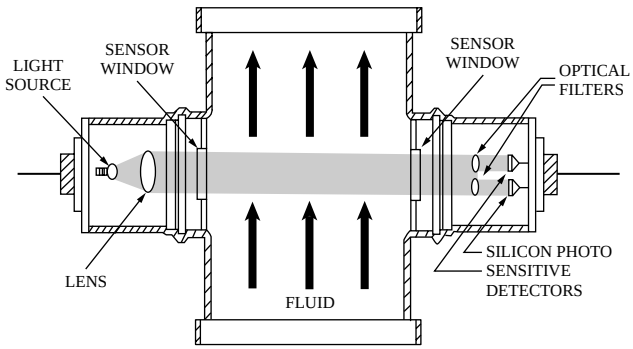

FIG. 8.60a
The design of an in-line color monitor. (Courtesy of Monitek.)

Units of Turbidity

The three main methods of light intensity detection are perpendicular scattering (nephelometry), backscattering, and forward scattering. Different turbidity units have evolved in connection with these different designs.

The Jackson turbidity unit (JTU), for example, is a purely optical scale that correlates well with forward-scattering measurements. The value of one JTU corresponds to the turbidity of a liter of distilled water when 1 mg (1 ppm) of diatomaceous fullers earth (an inert material) is suspended in it.

Nephelometric turbidity units (NTUs) are based on U.S. EPA-approved and stable polymeric suspension standards and correlate well with perpendicular scattering designs. Formazin turbidity units (FTUs) are based on a Formazin polymer standard and also correlate well with perpendicular scattering designs.

Conversion among Turbidity Units The correlation between different turbidity units is given in Table 8.60c. However, because different turbidity instruments respond differently to variations in particle size, color, index of refraction, etc., one

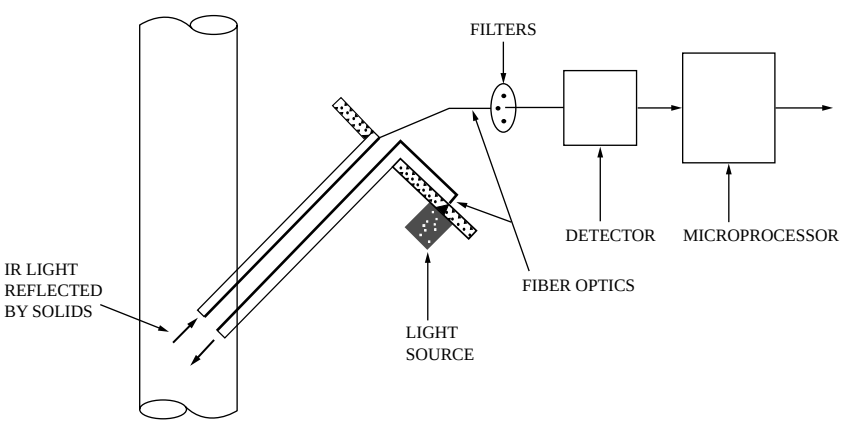

FIG. 8.60b
Probe-type, self-cleaning fiber-optic consistency detector. (Courtesy of Kajaani of Finland.)

© 2003 by Béla Lipták

TABLE 8.60c
*Conversion Between Different Units of Turbidity**

Turbidity Unit	*Kieselgur Units (SiO_2)*	*Absolute Units A.E.*	*Formazin Turbidity Units E.B.C.*	*Formazin Turbidity Units A.S.B.C.*	*Jackson Turbidity Units*	*Helm Units ($BaSO_4$)*	*Mastic Units*	*Langrohr Units Reciprocal*
Kieselgur units according to German Standards method (1 mg SiO_2 per liter dist. H_2O = 1 ppm)	1	0.000445	0.1	6.9	1	4	8	0.000465
Absolute units A.E. (Zeiss–Pulfrich turbidity unit)	2250	1						
Formazin turbidity units E.B.C.	10	0.00445	1	69	10	40	80	0.00465
Formazin turbidity units A.S.B.C.	0.145	0.000065	0.0145	1	0.145	0.58	1.16	0.0000675
Jackson turbidity units	1	0.000445						
Helm units ($BaSO_4$– Suspension)	0.25	0.00011	0.025	1.72	0.25	1	2	0.000116
Mastic units (1 drop mastic solution per 50 ml dist. H_2O; 50 drops ~1 ml)	0.125	0.000056	0.0125	0.86	0.125	0.5	1	0.0000582
Langrohr units according to German Standards method, reciprocal (cm light path at 25 mm dia.)	2150	0.956						1

*Courtesy of Sigrist-Photometer AG.

cannot obtain accurate correlation between them. These different scales include two Formazin scales in use. The error in turbidity measurements cannot be less than the precision at which the calibrating reference standard solution is available. In the case of Formazin standards, this variation can approach 1%. The NTU reference standards are more stable and last longer than the FTU ones.

The various turbidity units all measure the amount of solid particles in suspension. When parts per million (ppm) units are used, they can refer to the weight of the particular solids in suspension but, because this would require individual calibration using the particular solids, they usually refer instead to ppm of silica (silicon dioxide). Therefore, if the cloudiness (turbidity) of the process sample is the same as the turbidity that would result when 1 mg of silica is mixed in a liter of distilled water, the turbidity reading is called to be 1 ppm on the silica scale.

TURBIDITY ANALYZER DESIGNS

Forward-Scattering or Transmission Type

Similar to the design of color monitors, in the forward-scattering or transmission-type turbidity sensor design (Figure 8.60d), the light source is on one side of the process sample, and the detector is on the other. Therefore, what is detected in this case is the total attenuation. When this attenuation is the result of absorption by color, the unit is called a *colorimeter* (Figure 8.60a); when the attenuation is caused by light being scattered by solid particles, the unit is called a *turbidity meter.*

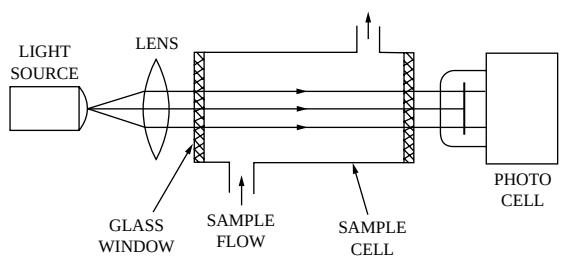

FIG. 8.60d
Schematic of transmission-type turbidity meter.

Dual-Beam Design When both color and solids are present, the total attenuation is the sum of the effects of absorption and scattering. Consequently, the single-beam turbidity analyzer can be used only if there is no color or if the color is constant and its effect can be zeroed out. When the background absorbance or color varies, a dual-beam or split-beam analyzer is needed.

Such a unit is described in Figure 8.60e. It uses two light paths, with one passing through the unfiltered process sample cell and the other through a reference sample cell containing the filtered process fluid. The output of the analyzer is proportional to the difference of optical absorbance between the two cells, which corresponds to the solid particles that are present in the sample but absent in the reference cell.

The particular design illustrated in Figure 8.60e has an oscillating mirror, which alternately directs the light beam (alternating 600 times per second) to the measuring and reference cells. The photocell detector converts the intensity

© 2003 by Béla Lipták

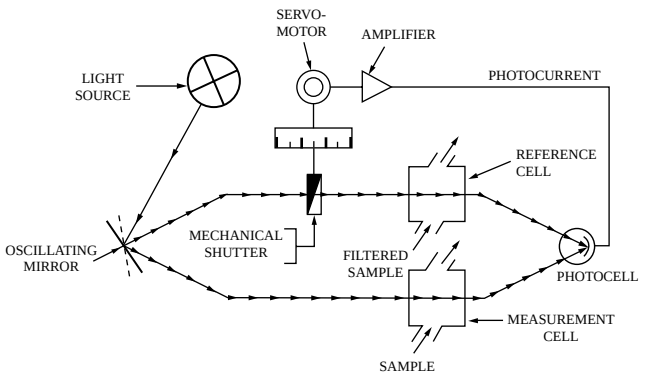

FIG. 8.60e
Oscillating dual-beam, forward-scattering turbidity analyzer. (Courtesy of Sigrist Process Photometer.)

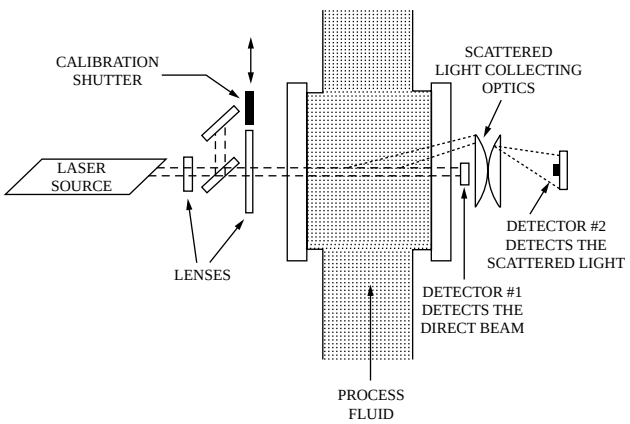

FIG. 8.60f
Laser-type in-line turbidity meter detects separately the total attenuation and the amount of scattering.

differential of the two beams into a photocurrent, which modulates the opening of a mechanical shutter so that the differential between them will be zero. Therefore, the more solid particles present in the sample, the farther the shutter needs to be closed; therefore, the position of the shutter can be read as turbidity.

If, instead of using the filtered sample, the reference cell is filled with other reference materials, this same instrument can be used to measure properties such as color, fluorescence, and so on.

Laser-Type Meter In the in-line laser-type turbidity meter (Figure 8.60f), a thin ribbon of light is transmitted across the process stream and, after it is attenuated by the process fluid, it falls on detector no. 1. If solids are present in the process fluid, some of the light will be scattered. This scattered light is collected and falls on detector no. 2. The ratio of the two signals from the detectors is an indication of the amount of solids in the process stream (turbidity). Because it is a ratio signal, it is unaffected by light source aging, line voltage variations, or background by light intensity variations.

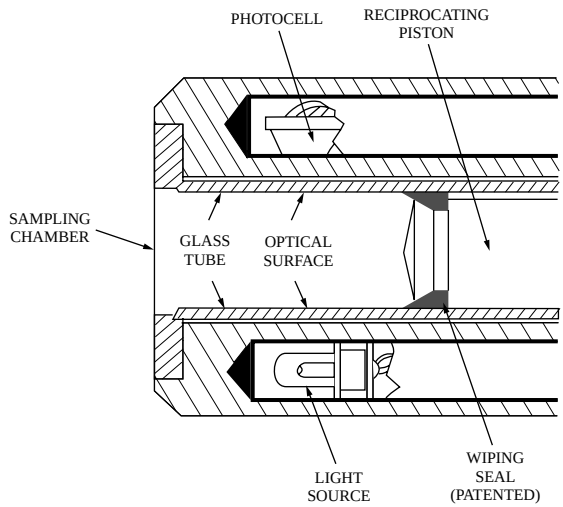

FIG. 8.60g
Probe-type suspended solids detector used on biological sludge applications. (Courtesy of Monitek Inc.)

The laser-type detector is less sensitive to interference by gas bubbles than are other turbidity meters, because the laser-based light ribbon is very thin (about 2 mm). Therefore, when a bubble passes through this ribbon, it causes a pulse that can be filtered out.

In general, in-line turbidity meters are less subject to bubble interference than are the turbidity analyzers, which require sampling. This is because the in-line units do not lower the operating pressure of the stream, so dissolved gases are not encouraged to come out of solution.

Suspended Solids and Sludge Density Sensors Figure 8.60g illustrates a probe-type suspended solids detector, widely used in biological sludge applications. The probe contains a reciprocating piston that, during its forward stroke, expels a sample (every 15 to 40 sec) while wiping clean the optical glass of its internal measurement chamber. After that, it pulls in a fresh sample during its return stroke. This device measures the total attenuation of the light, which, in the case of biological sludge applications, is mostly due to suspended solids. Because of its self-cleaning nature, the need for cleaning and maintenance is minimized.

This unit is available with a 4 to 20 mA transmitter output, which is updated every 15 to 40 sec and has a full-scale inaccuracy of 5% over the suspended solids ranges between 0–0.1% and 0–10%.

Scattered Light Detectors (Nephelometers)

Turbidity instruments utilize a light beam projected into the sample fluid to effect a measurement. The light beam is scattered by solids in suspension, and the degree of light attenuation and the amount of scattered light produced can both be related to turbidity. The light scattering is called the *Tyndall effect*, and the scattered light itself is called the *Tyndall light.*

© 2003 by Béla Lipták

A constant-candle-power lamp provides a light beam for measurement and, if one or more photosensors are appropriately placed, they can convert the measured light intensity into an electrical signal for readout. Usually, the photosensor is provided with a thermostat-controlled heater that maintains a constant temperature, because this measurement is temperature sensitive.

The supply voltage of the lamp must be kept constant within at least 0.5% to eliminate errors resulting from source intensity variations, because the measured light is referenced to the source. Deposits formed on the flow chamber windows interfere with accurate measurement and, thus, the windows require frequent cleaning or automatic compensation.

Instruments for measuring scattered light vary in design. One type uses a flow chamber similar to the one in Figure 8.60d, except that the window for the measured light is located at 90° to the window for the incident light (Figure 8.60h). One window transmits light beams into the measuring chamber, and the other, at right angles to the first, transmits scattered light to the photomultiplier sensor.

A light trap is located opposite the incident light window to eliminate reflection. With this arrangement, dissolved colors do not affect the measurement; however, instrument sensitivity is decreased if color is present, because some light is absorbed by it. Variations of the basic unit include designs provided with two source beams and with two photosensors in conjunction with two pairs of opposed windows as shown in Figure 8.60i.

Some designs utilize a separate photosensor to monitor the lamp output and to adjust the lamp supply voltage through a feedback circuit, which maintains the light intensity at a constant value.

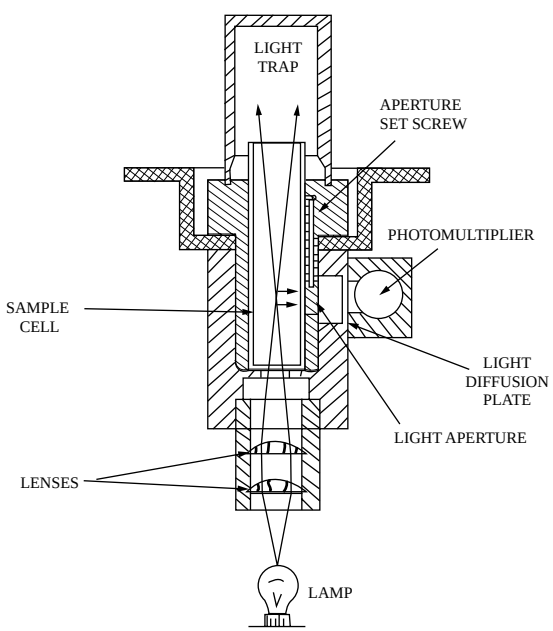

FIG. 8.60h
Light-scattering turbidity meter.

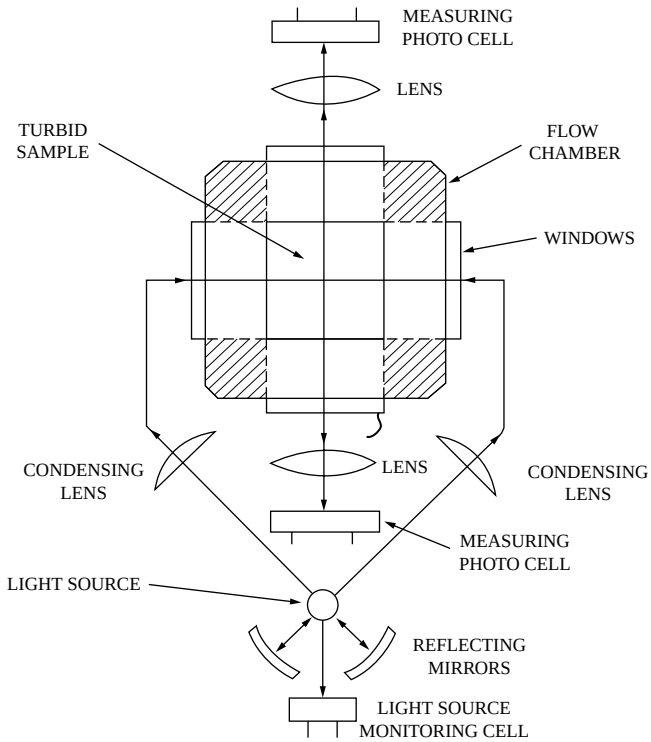

FIG. 8.60i
Turbidity meter with two light beams, two windows, and two measuring photocells.

Probe Design For wastewater and biological sludge applications, probe-type turbidity transmitters are preferred. One design (Figure 8.60j) uses an infrared light source and measures the intensity of the 90° scattered light that results.

These units are microprocessor based and are provided with built-in compensation for ambient light variations. They are also provided with wipers for automatic cleaning of the dip or insertion probe. The cleaning frequency is adjustable between 1 and 6 hr and, while the probe is being cleaned by a wiper, the output signal of the transmitter is held constant at its last value.

Backscatter Turbidity Sensors

The turbidity meters that do not have optical windows are not plagued by the problem of coating and deposit buildup on these windows. Figures 8.60k and 8.60l show two such windowless designs.

The unit shown in Figure 8.60k measures the surface scatter of a light beam. Particles on the surface of the fluid scatter the light in the direction of the photocell sensor. The design in Figure 8.60l projects the light beam into the sample so that, in this design, all particles in the path of the light beam contribute to the measurement.

The principal disadvantage of these designs is that they must operate at atmospheric pressure and at low sample flow rates.

© 2003 by Béla Lipták

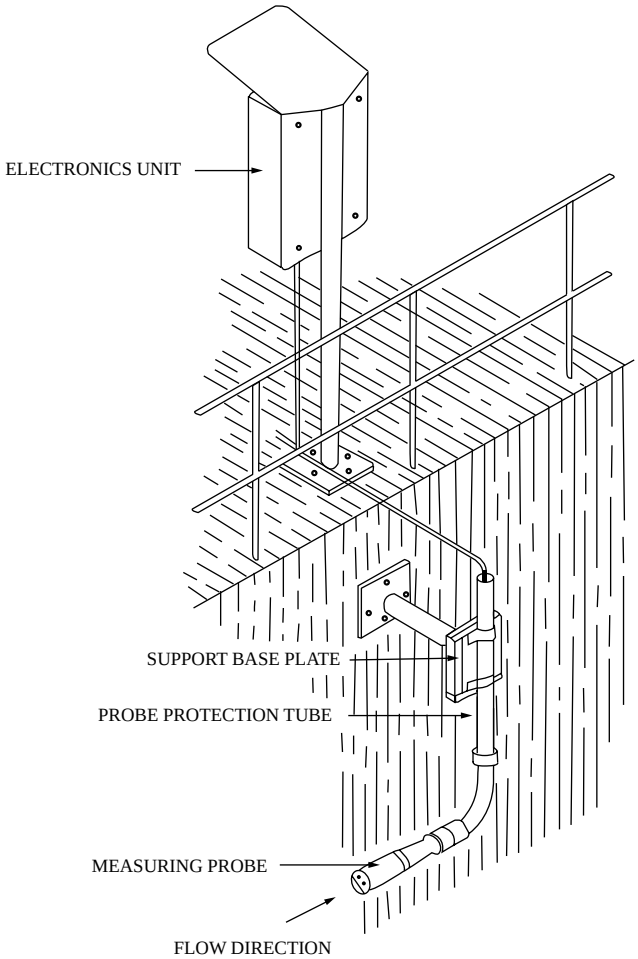

FIG. 8.60j
Automatically cleaned 90° scatterer light-detecting turbidity transmitter. (Courtesy of BTG, a Titan Co.)

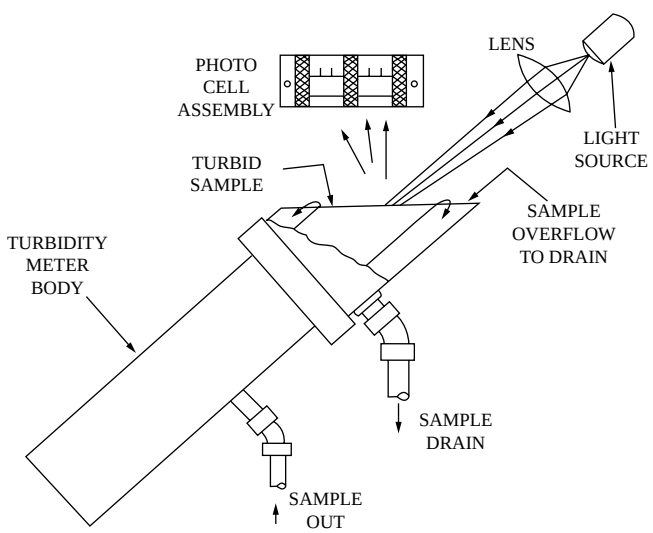

FIG. 8.60k
Surface scatter turbidity meter.

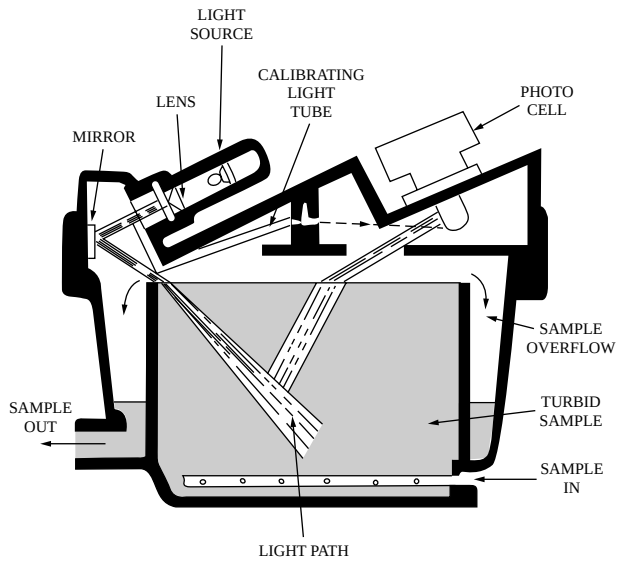

FIG. 8.60l
Atmospheric backscatter-type turbidity meter.

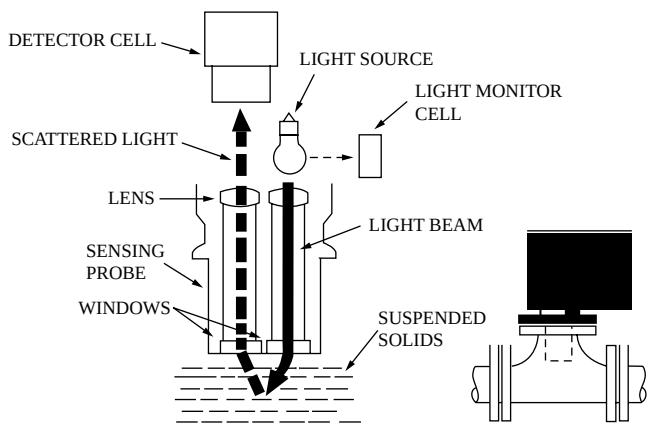

FIG. 8.60m
In-line backscatter-type turbidi ty analyzer.

In-Line Units Figure 8.60m illustrates the in-line version of the backscatter-type turbidity analyzer, which can be installed in either pipes or vessels. In this design, a 180° backscatter effect is measured. The units are suited for higher temperature applications (up to 450°F, or 232°C) and for high concentrations of solids. Ranges from 10 to 5000 ppm up to 5 to 15% on the silica scale are available.

A backscattering design using fiber-optic light cables is also available (Figure 8.60b).

Density-Based Sensors

If the concentration of suspended solids can be correlated to density, a variety of densitometers can be considered for coating- or sludge-type applications. The common advantage of these designs is that they do not depend on optical sensors and therefore do not require windows, which require cleaning.

© 2003 by Béla Lipták

A variety of such densitometers are described in some detail in Chapter 6, so only a few references will be made here. The designs that are best suited for sludge-type applications are the ones that consist of only open pipes without any restrictions. Of these, Figure 8.5a illustrates the Coriolis type, Figure 8.6g the radiation type, Figures 6.7b, 8.7c, and 6.7d the sonic and ultrasonic sludge densitometers, Figure 6.8h the vibrating twin-tube design, and Figure 6.9c the weighed U-tube densitometer.

CONCLUSIONS

Turbidity measurement is fairly simple in theory. The practical problems with these instruments include the problems posed by light source intensity changes, deposits on optical windows, and the presence of dissolved colors in the sample. Units are now available that automatically correct not only for these effects but also for the variations in the ambient light intensity and even for gas bubbles. Self-cleaning probe designs are also available.

The turbidity detector should be selected on the basis of the type of information needed (transmission, 90 or 180° scatter), the nature and concentration of the solids that are to be detected, and the materials of construction required for the application.

Bibliography

Annual Book of ASTM Standards, American Society for Testing and Materials, West Conshohocken, PA, 2002, www.normas.com/ASTM.

Becker, W. et al. *Optimizing Ozonation for Turbidity and Organic Removal*, American Water Works Association, Denver, CO, 1996.

Buffle, J., Ed., *In Situ Monitoring of Aquatic Systems*, John Wiley & Sons, New York, 2000.

Capano, D., The ways and means of density, *InTech*, November 2000.

Dubois, R., van Vuuren, P., and Tatera, J., "New sampling sensor initiative: an enabling technology," 47th Annual ISA Analysis Division Symposium, Denver, CO, April 14–18, 2002.

Ewing, G. W., *Analytical Instrumentation Handbook*, Marcel Dekker, New York, 1997.

Extance, P. et al., Intelligent turbidity monitoring using fiber optics, *Proc. First Int. Conf. Optical Fiber Sensors*, IEE, London, 1983.

Frenkel, M., Schwartz, R., and Garti, N., Turbidity Measurements as a Technique for Evaluation of Water-in-Oil Emulsion Stability, *J. Dispersion Sci. Technol.*, 3(2), 1982.

Fussell, E., "Molding the future of process analytical sampling," *InTech*, August 2001, 32.

Gordon, I., Vibrating element technology for measuring liquid density in process applications, *Proc. ACHEMA*, Frankfurt, 2000.

Hashimoto, M. et al., An automated method for bacterial test by simultaneous measurement of electrical impedance and turbidity, *Jpn. J. Med. Eng.*, February 1981.

Hilliand, C. L., Design Solutions for Typical Problems of Colorimetric Process Analyzers, October 1992.

Kaiser, J. et al., *Bioindicators and Biomarkers of Environmental Pollution*, Science Publishers, Enfield, NJ, 2001.

Kotnik, P. et al., Accurate density measurement using oscillating density meters, *Proc. ACHEMA*, Frankfurt, 2000.

Krigman, A., Turbidity instrumentation: clearing muddy waters, *InTech*, February 1984.

Letterman, R. D., *A Study of low-Level Turbidity Measurements*, AWWA Research Foundation, Denver, CO, 2002.

McMahon, T. K., "The New Sampling/Sensor Initiative," *Control*, August 2001.

Mitchell, M. K. and Stapp. W., *Field Manual for Water Quality Monitoring*, 12th ed., LaMotte Company, Chestertown, MD, 2000.

Sherman, R. E., *Process Analyzer Sample-Conditioning System Technology*, John Wiley & Sons, New York, 2002.

"The basics of photoelectric sensors," *Control*, April 1989.

Thomson, M., "Interfacing sample handling systems for on-line process analyzers," www.measurementation.com.au/tp-1.htm, January 14, 2002.

Van den Berg, F. W. J., Hoefsloot, H. C. J., and Smilde, A. K., "Selection of optimal process analyzers for plant-wide monitoring," *Anal. Chem.*, 74(13), 3105–3111, 2002.

Waller, M. H., measurement and control of paper stock consistency, *Proc. ISA Conf.*, Houston, TX, October 1992.

Weiss, M. D., Particle size analysis goes on line, *Control*, August 1990.

© 2003 by Béla Lipták

8.61 Ultraviolet and Visible Analyzers

J. E. BROWN (1969, 1982) **T. M. CARDIS** (1995) **B. G. LIPTÁK** (2003)

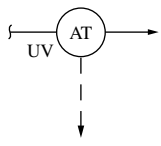

Flow Sheet Symbol

Configurations:	A. Photometers are nondispersive analyzers in which the source radiates over its full ultraviolet (UV) spectrum, and discrete wavelengths are separated by narrow (2 to 10 nm) bandpass filters. Most process analyzers are nondispersive. B. Spectrophotometers are dispersive analyzers in which a prism is used to separate the spectral components of the UV spectrum. Most laboratory analyzers are dispersive.
Types of Designs:	Optics can be configured as single-beam, split-beam, dual-beam, or flicker photometers. The process stream can pass through a measurement chamber, or probe-type analyzers can be inserted into the process stream using a retroreflector configuration. Most detectors are capable of measuring the intensity of one wavelength at a time, whereas photodiode arrays can detect all wavelengths simultaneously.
Type of Sample:	Gas, vapor, and liquid
Design Pressure:	Normally atmospheric but it can also be pressurized up to 150 PSIG (10.7 barg) to enhance sensitivity when analyzing gas samples. The fiber-optic, diode-array type of in-line analyzer can operate at up to 730 PSIG (50 barg).
Sample Temperature:	Standard units operate from 32 to 302°F (0 to 150°C); stack gas analyzer can operate at up to 800°F (427°C).
Materials of Construction:	Quartz and sapphire windows; other parts available in stainless steel, Hastelloy®, Monel®, titanium, Teflon®, Kynar®, and all other conventional materials
Wavelength Ranges:	Standard ranges include 200 to 800 nm or 400 to 1100 nm.
Cell Lengths:	Standard units are from 0.039 to 39.4 in. (1 to 1000 mm); for fiber-optic diode-array analyzer, 0.3 to 10 mm.
Repeatability:	±1% of full scale
Inaccuracy:	±2% of full scale for most; ±1% of full scale for the fiber-optic diode-array type of UV-visible analyzer
Cost:	Portable battery-operated or benchtop laboratory UV-visible (200 to 1000 nm) photometers, spectrophotometers, and scanning spectrophotometer range from $2000 to $5000. Portable UV stack gas monitors range from $5000 to $7000, and the cost of permanently installed stack monitoring packages is from $25,000 to $35,000 depending on materials of construction, accessories, and number of components analyzed. Industrial UV photometers without sampling systems cost in the range of $20,000 to $25,000; photodiode array spectrophotometers cost from $50,000 to $70,000; fiber-optic spectrophotometers cost from $40,000 to $60,000.
List of Suppliers	ABB Inc., Analytical Products (A) (www.abb.com/analytical) Ametek Process Instruments (A, B) (www.ametekpi.com) Ametek Thermox (A) (www.thermox.com)

© 2003 by Béla Lipták

Anacon (A) (www.anacon.com)
Anatel (www.anatel.com)
Arizona Instruments (www.azic.com)
Bran & Luebbe Inc. (B) (www.branluebbe.com)
Cole-Parmer Instrument Co. (A, B) (www.coleparmer.com)
Custom Sensor technology (A) (www.customsensors.com)
Draeger Safety Inc. (www.draeger.com)
EcoChem Analytics (www.ecochem.biz)
Emerson Process Analytics (www.processanalytic.com)
FMC Invalco (www. fmcinvalco.com)
Ionics (www.ionics.com)
LT Industries (B) (www.ltindustries.com)
OPSIS (www.opsis.se)
Rosemount Analytical Inc. (B) (www.processanalytic.com)
SECap (www.sentech.no)
Servomex (A) (www.servomex.com)
Siemens Energy and Automation Inc. (A) (www.sea.siemens.com)
Thermo-Environmental Instr. (www.thermoei.com)
Thermo Onix (www.thermoonix.com)
Teledyne Analytical Instr. (A) (www.teledyne-ai.com)
Tristan (B) (www.sciopt.com)
Tytronics (A) (www.tytronics.com/)

INTRODUCTION

This section is devoted to the description of ultraviolet/visible (UV/VIS) analyzers. UV/VIS analyzers are also discussed in Section 8.23 (Fiber-Optic Probes), Section 8.26 (Hydrogen Sulfide), Section 8.37 (Nitrogen Oxide Analyzers), Section 8.44 (Ozone in Gas), Section 8.56 (Sulfur Oxide Analyzers), and several other sections.

Another related topic is open path IR and UV spectrometry, which is covered in Section 8.40. Infrared and near-infrared analyzers are discussed in Section 8.27, and visible analyzers are also described under the subject of colorimeters in Section 8.15.

UV Absorption

Fewer compounds absorb in the UV region than in the IR region, and the UV absorption pattern of a compound is not as distinctive (not as narrow) as is its IR "fingerprint." On the other hand, UV analyzers provide better selectivity in applications in which the sample contains air and humidity, because these materials do not absorb in the UV region.

UV analyzers are also more sensitive than IR detectors. Figure 8.61a shows the absorbance of sulfur and nitrogen dioxides in the UV region. On an equal path-length basis, the UV absorbance of liquids is stronger than that of vapors in proportion to their densities.

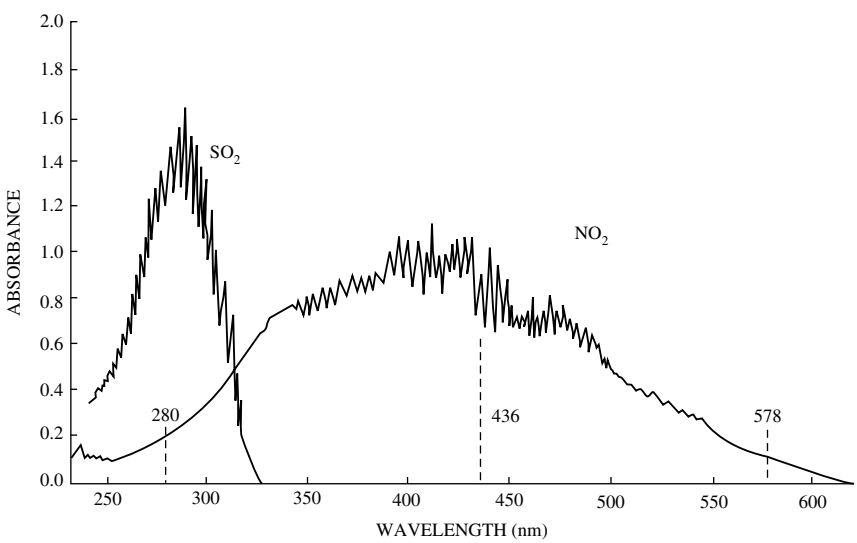

FIG. 8.61a
The absorbance characteristics of both SO_2 and NO_2 in the ultraviolet range.

© 2003 by Béla Lipták

This section starts with some theoretical discussions of the principles of UV radiation. This is followed by an explanation of different analyzer configurations and their main components.

THEORETICAL ASPECTS

Ultraviolet, visible, and near-infrared photometers and spectrophotometers are widely used in the process industries. On-line UV analyzers have been used since the 1940s.

The Radiation Spectrum

The ultraviolet (UV), visible (VIS), and infrared (IR) regions of the electromagnetic radiation spectrum are shown in Figure 8.61b. The UV region covers the wavelengths from 200 to 400 nm. The visible region extends from 400 to 800 nm, and the near IR (NIR) region covers from 0.8 to 2.50 μm.

Nanometer units are commonly used in the UV/VIS region, and micrometers (or microns) are normally used in the NIR region (Table 8.61c). The UV-VIS-NIR is a relatively small part of the electromagnetic radiation spectrum, and the shorter the wavelength (the higher the frequency) the more penetrating the radiation becomes.

Compounds absorb at various frequencies of radiation depending on the energy of their molecular transitions. High-energy electronic transitions are observed in the shorter-wavelength UV-VIS regions. Moderate-energy (vibrational and rotational) transitions are observed in the longer-wavelength IR region.

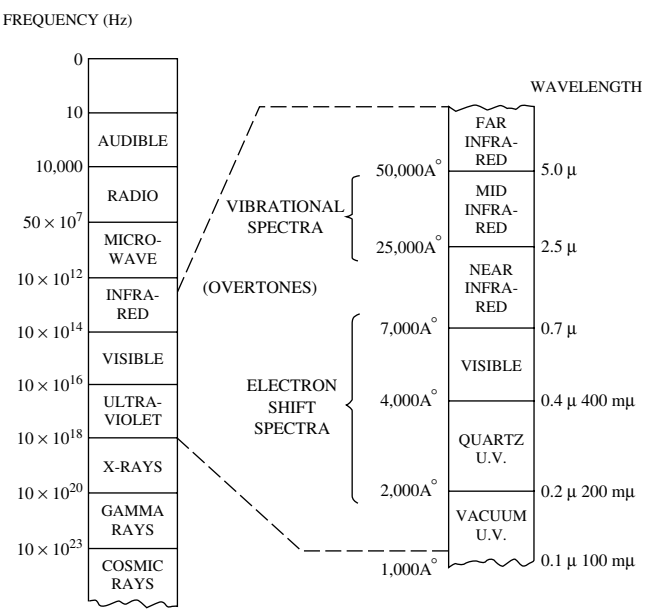

FIG. 8.61b
Electromagnetic radiation spectrum from the audible frequency up to that of the cosmic rays.

TABLE 8.61c
Relationship of Wavelength Terms

Angstrom = Å = 10^{-10} meters
Micrometer = μm = 10,000 Å = 10^{-6} meters
Nanometer = nm = 10 Å = 10^{-9} meters
Meter = 10^3 nm = 10^6 μm = 10^9 nm = 10^{10} Å

The Beer–Lambert Law

Absorption spectroscopy is the measurement of radiation intensity at spectral wavelengths that are characteristic of the compound being monitored. When radiation enters a process sample, only part of the light is transmitted through (Figure 8.61d) it. The remainder of the radiation is absorbed or reflected, depending on the concentration of the sample and on the wavelength being measured. If particles are present in the sample, part of the radiation will be scattered.

The Beer–Lambert law is the fundamental law that governs quantitative analysis by absorption spectroscopy. This law states

$$A = abc \qquad \textbf{8.61(1)}$$

where

A = absorbance
a = molar absorptivity
b = sample path length
c = concentration of absorbing species

The molar absorptivity (a) is a constant that is characteristic of the chemical species being measured, and the path length of the sample cell is fixed. Therefore, the only variable that causes the absorbance (A) to vary is the concentration of the component being measured.

The absorbance of a sample is measured indirectly by measuring the transmitted radiation. The relationship between absorbance and transmittance is

$$A = \log (1/T) \qquad \textbf{8.61(2)}$$

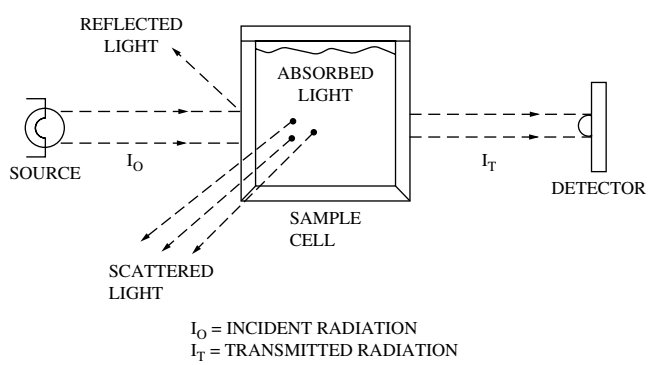

FIG. 8.61d
Absorption of light.

© 2003 by Béla Lipták

where

T = transmittance

Calibration Calibration methods for photometers involve the measurement of absorbance for several concentrations of the component being measured. When a plot of absorbances vs. concentration gives a linear response, the method obeys the Beer–Lambert law. When the photometer exhibits a nonlinear response, a linearizer circuit is used to compensate for the nonlinearity.

UV-Absorbing Compounds

The UV spectra of some typical absorbers are shown in Figure 8.61e. The characteristics of these spectra are notably different from the spectra of absorbers in the IR region (Figure 8.27b). For this reason, the UV analyzer can be expected to be less specific than an IR instrument.

If other UV-absorbing compounds are also present in the sample, more interference can be expected because of the broad characteristics of its spectra. On the other hand, UV analyzers are generally capable of greater sensitivity than their IR counterparts, so trace analyses are common for UV. This is due in part to the broad energy absorption and greater absorptivity of some compounds and to the availability of stronger sources that permit the use of longer cells.

UV Absorption Spectrum An absorption spectrum of a compound is obtained by plotting the intensity of transmitted light or absorbance as a function of wavelength. Ultraviolet spectra for three typical UV absorbers are presented in Figure 8.61e.

The benzene spectrum was obtained from a vapor phase sample. The acetone and phenol spectra were run on liquid samples dissolved in water. An important observation in these spectra is the high degree of overlap for the absorption bands in the 240 to 280 nm region. Care therefore must be exercised in UV applications to ensure that other compounds present in the process stream do not interfere with the measurement of the component of interest.

A useful feature of the UV region is that water does not absorb UV radiation. This allows for the measurement of trace levels of UV absorbers in aqueous samples. Generally, UV photometers have very good sensitivity.

The ultraviolet is a high-energy region of the electromagnetic spectrum where electronic transitions are observed. Absorption of radiation occurs in the UV region (200 to 400 nm) when an electron is excited from a ground energy state to an excited energy state. UV photometers are used principally to measure aromatic compounds, unsaturated compounds, and other compounds that contain pi electrons or unshared electron pairs. Another group of compounds that absorb in the UV are chromophores such as carbonyls, nitrates, and sulfoxides. A partial list of UV-absorbing compounds is given in Table 8.61f.

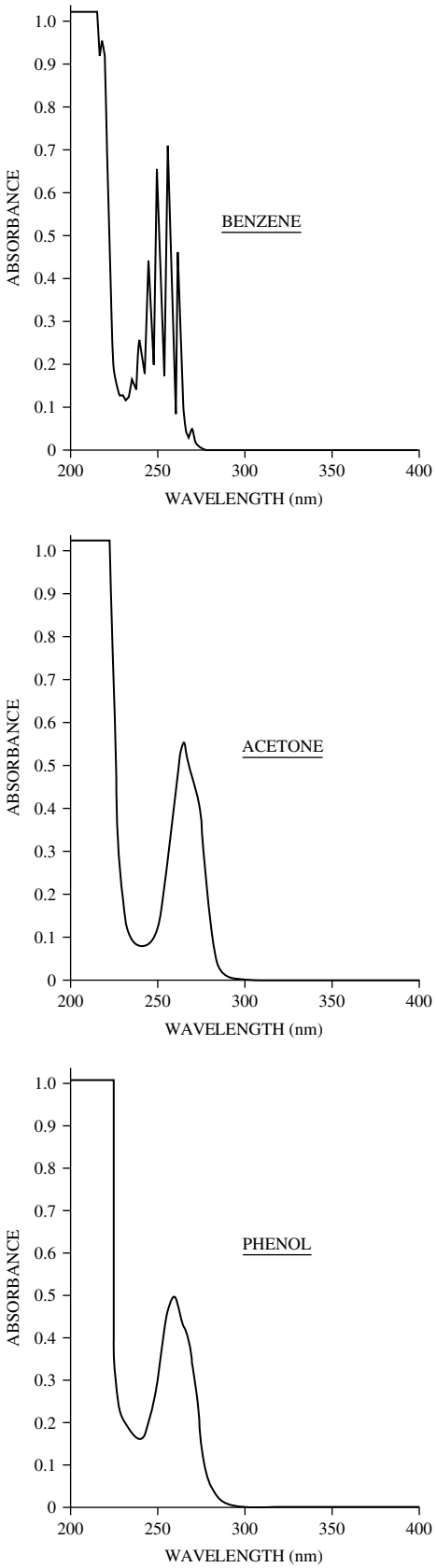

FIG. 8.61e
Ultraviolet spectra of benzene, acetone, and phenol.

© 2003 by Béla Lipták

TABLE 8.61f
Partial List of UV-Absorbing Compounds

Acetic acid	1,3-Cyclopentadiene	Nitrogen dioxide
Acetone	Dimethylformamide	Ozone
Aldehydes	Elemental halogens	Perchloroethane
Ammonia	Ethylbenzene	Phenol
Aromatic compounds	Ferric chloride	Phosgene
	Fluorine	Potassium permanganate
Benzene	Formaldehyde	Proteins
Bromine	Formic acid	Salts of transition metals
Butadiene (1,3)	Furfural	Sodium hypochlorite
Caffeine	Hydrogen peroxide	Styrene
Carbon disulfide	Hydrogen sulfide	Sulfur
Carbon tetrachloride	Iodine	Sulfur dioxide
Chlorine	Isoprene	Sulfuric acid
Chlorine dioxide	Ketones	Toluene
Chlorobenzene	Mercury	Trichlorobenzene
Crotonaldehyde	Naphthalene	Uranium hexafluoride
Cumene	Nitric acid	Xylene (*ortho*, *meta*, and *para*)
Cylohexanol	Nitrobenzene	

Applications UV photometers are normally used for the measurement of a key single component in a process stream. The following applications are examples of typical UV photometer measurements:

1. Residual chlorine in water in pulp and paper process
2. Total aromatics in wastewater
3. Chlorine in dichloroethane in vinyl chloride processes
4. Hydrogen sulfide and sulfur dioxide in the Claus sulfur recovery process in the petroleum refining industry
5. Sulfur dioxide in incinerator stack emissions

UV ANALYZER COMPONENTS

Photometers and spectrophotometers can be used for on-line monitoring of process streams. A diagram of the five main components that make up a spectrophotometer is shown in Figure 8.61g.[1] These components are enumerated below.

1. Source (provides radiation for the spectral region being measured)
2. Monochromator (a device used to select narrow bands of wavelengths)
3. Sample cell (contains the sample and provides an appropriate path length)

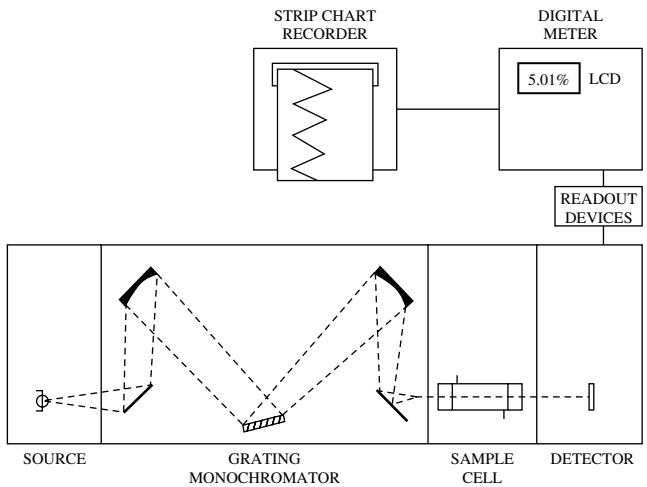

FIG. 8.61g
Block diagram showing the main components of a spectrophotometer.

TABLE 8.61h
Typical Sources and Detectors

	Ultraviolet	*Visible*	*Near Infrared*
Sources	Cadmium vapor Mercury vapor Zinc vapor Deuterium arc Tungsten-iodine	Tungsten filament Quartz-halide	Tungsten filament Quartz-halide
Detectors	Photomultiplier tube Silicon photodiode Diode array	Photomultiplier tube Silicon photodiode Diode array	Lead sulfide Germanium photodiode Diode array Pyroelectric

4. Detector (a device that measures transmitted energy and converts it into an electrical signal)
5. Readout device (provides a means of displaying or recording the measurement results)

Radiation Sources

The purpose of the radiation source is to provide sufficient energy of radiation to make the desired measurement in the region of spectral interest. Table 8.61h lists some of the sources commonly used in process photometers. The two sources used in the visible and NIR regions are tungsten filaments and quartz-halide lamps.

The cadmium, mercury, and zinc vapor sources that are used in the UV region are *emission line* sources. The output of these sources provides radiation as narrow discrete emission lines at a high-energy level. Mercury vapor lamps are often used because of their long service life. Deuterium arc sources provide a broad range of UV radiation at all of the wavelengths in the UV region. The energy of the deuterium source is relatively lower than the energy of the mercury source.

© 2003 by Béla Lipták

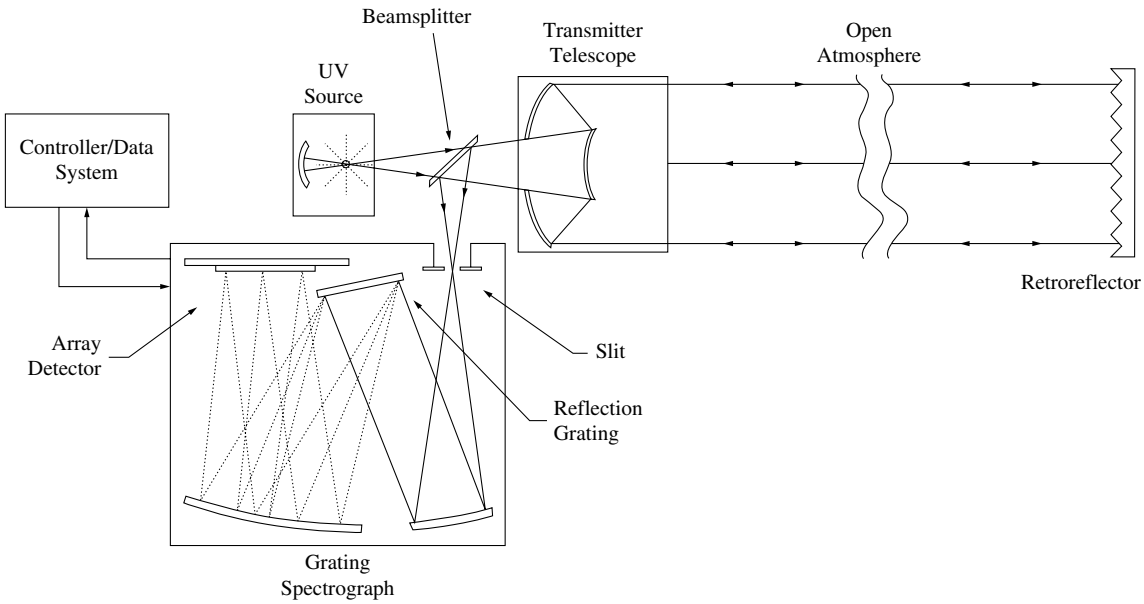

FIG. 8.61i
How the UV source is used in an open-path spectrometer.

Broad and Discrete Line Sources Two types of UV energy sources are used: broad and discrete line emission sources. In open path UV spectrometers (Section 8.40), the most commonly used sources are high-pressure xenon arc lamps, which emit a continuum from the UV to the visible spectra. (Figure 8.61i).

The broad emission sources provide energy in a broad wavelength band, and narrowband filters can be used to isolate the wavelengths of interest. These sources provide all wavelengths in the region, but some have a low-emission or low-energy level at a particular wavelength. Such low-energy sources include hydrogen or deuterium discharge lamps, tungsten lamps, and tungsten-iodine lamps.

Discrete line sources use gas discharge lamps with narrow lines of emission. These sources emit radiation energy at various discrete wavelengths at a high-energy level. The undesired are filtered, leaving only the wavelength of interest. However, the gas discharge lamps are limited to the spectral emissions of mercury, cadmium, zinc, and thallium. Therefore, not all wavelengths are available.

Selecting the Measuring Wavelength Selection of measuring and reference wavelengths is generally a compromise between the maximum absorbance wavelength of the component of interest and the wavelengths available from the gas discharge lamps. This usually leads to the selection of a wavelength on the side of the absorption peak.

Of the radiation sources used in the UV region, the tungsten-filament-type incandescent lamps are the least expensive. These continuous spectrum sources can be used in UV photometers, but they have sufficient energy only at wavelengths exceeding 350 nm. Tungsten-iodine cycle lamps can be used down to 300 nm. Mercury vapor lamps are the most useful UV sources because of their high intensity and long life (up to five years).

Medium-pressure mercury lamps can operate down to 300 nm, and low-pressure ones down to 254 nm. Zinc discharge lamps are useful because of their 214-nm emission line, as are chromium ones for their 228-nm emission line, but they are not as stable as mercury lamps. Hydrogen and deuterium lamps are delicate and expensive, and their lives seldom exceed three months.

The Monochromator

Both dispersive and nondispersive monochromators are used in photometric analysis. Spectrophotometers are dispersive instruments, and photometers are nondispersive devices. The function of the monochromator is to disperse light from a source and selectively send a narrow spectral band to the sample and detector.

The dispersing element is usually a diffractive grating, which is a highly polished mirror with a number of parallel lines scribed on its surface. For each position of the grating, a narrow band of dispersed radiation passes through the exit slit. Spectrophotometers are dispersive devices that are used to scan across a spectrum of wavelengths; they can be used to make measurements at several wavelengths. This capability allows for the analysis of multiple components with a spectrophotometer.

Photometers are nondispersive devices that exclude a large amount of spectral radiation. Photometers are used to make measurements at selected discrete wavelengths. Narrow bandpass interference filters are used to pass radiation at selected reference and measurement wavelengths. A typical

© 2003 by Béla Lipták

bandwidth for UV/VIS filters is 10 nm. The typical bandwidth for NIR filters is 20 to 80 nm.

The UV spectra of benzene, acetone, and phenol were presented in Figure 8.61e. For such measurements, the reference wavelength filter is normally selected where none of the background components present in the process stream absorb radiation. The measurement wavelength filter is selected to match the absorption band of the component being analyzed. The ratio of the transmitted light at the reference and measured wavelengths is measured by the photometer. Normally, photometers are used to measure a single component in a process stream.

The Measuring Cell

The purpose of the measuring cell is to contain a representative sample from the process steam. The major components of the cell are the cell body, windows, and O-rings. The proper selection of cell materials is very important for the successful application of a process photometer. Stainless steel is the material most commonly used for cell bodies. Other metals such as Monel, Hastelloy, and titanium are also used. Plastic cell bodies made of Teflon or Kynar are used in some applications. Quartz, sapphire, and glass cell windows are used in the UV-VIS-NIR spectral regions.

The sealing of the sample in the cell is accomplished with O-ring gaskets. Viton®, ethylene-propylene, and Kalrez® O-rings are commonly used in sample cells. An important parameter for the cell is the selection of an appropriate path length. The distance between the windows determines the path length of the cell. Path lengths from 1 mm to 1 m (0.039 to 39.4 in.) are used in process photometers. The sensitivity of a photometric measurement is dependent on the path length. For a particular measurement, a long path length will provide more sensitivity than a short one.

Detectors

The detectors used in process UV analyzers include phototubes, photomultiplier tubes, and photocells. The photoelectric effect is used in the vacuum phototube to produce a current proportional to the energy striking the tube cathode. A phototube with UV response has a long life and a low temperature coefficient.

The photomultiplier tube offers very sensitive detection of UV and visible light, but large radiation energy levels will damage its light-sensitive surface. This detector has a high temperature coefficient.

The photocell (photovoltaic) is a semiconductor light detector of the barrier-layer type. It develops a current that is proportional to the light intensity, but this current output is not linear with the radiation energy level reaching the detector. This may not be detrimental when used in a null-balance detection system, and the relatively low cost of this device (because a voltage supply is not required) can make it attractive.

Table 8.61h lists the commonly used detectors in the UV-VIS-NIR regions. Photomultiplier tubes (PMT) have traditionally been used in UV/VIS instruments. In the PMT, the photoelectric effect is used to produce a current proportional to the radiation that is striking the cathode of the tube. The gain voltage of the photocathode can be adjusted to obtain the desired sensitivity from the PMT.

Photodiodes are solid state detectors that are smaller in size and lower in cost than PMT detectors. Silicon photodiodes are semiconductor detectors that are used in the UV/VIS region. Germanium photodiodes are used in the NIR region. A more recent development in photometric analyzers is the use of photodiode arrays (PDAs). The PDA detectors are used throughout UV-VIS-NIR regions. Many discrete detectors can be located in a very close space in the PDA.

This array of diode detectors allows for all of the wavelengths to be measured simultaneously. The PDA detectors can be used for multicomponent applications. Lead sulfide, germanium photodiodes, and pyroelectric detectors are used in the NIR photometers.

Readouts

Analog meters, digital meters, strip chart recorders, and video display tubes (VDTs) are examples of readout devices used in photometers and spectrophotometers. On-line photometers are usually microprocessor operated and usually have both a 4 to 20 mA analog output and a digital output, which is sent to the process control computer. Spectrophotometers can incorporate a strip chart recorder to record a spectrum of the analyzed sample. The spectrum is a plot of percentage transmission or absorbance readings as a function of wavelength.

UV ANALYZER DESIGNS

The proven industrial designs used for process UV analyzers include the following:

1. Single-beam
2. Split-beam
3. Dual-beam, single-detector
4. Dual-beam, dual-detector
5. Flicker photometer
6. Photodiode
7. Retroreflector

Single-Beam Analyzer

This simple design is limited to easy applications. The optical system (Figure 8.61j) consists of a source and two photo-tube detectors. The light source and detectors are so aligned that both detectors receive radiation from the same portion of the source. A sample cell and an interference filter are positioned

© 2003 by Béla Lipták

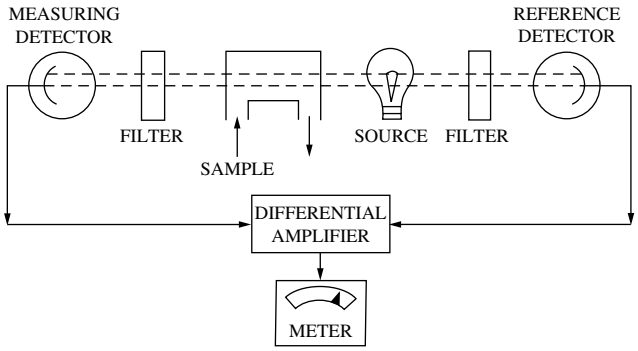

FIG. 8.61j
Opposed-beam UV analyzer.

between one detector and the source. The filter is selected to isolate the wavebands in which only the component of interest will absorb. The cell length is sized to give a sufficiently long absorbing path to provide good sensitivity (i.e., high absorbers require shorter paths). A filter usually identical to the measuring filter is positioned between the source and reference detector.

The amplifier, or control circuit, compares the outputs of the two phototubes, and the difference in their outputs is related to the UV energy absorbed by the sample. The reference detector is used to provide compensation for changes in line voltage and source decay. In the past, some process analyzers were built without this feature. They detected only the energy change at the measuring detector, but these analyzers were found to be subject to drift and unreliable.

The opposed-beam design is a simple, low-cost, moderate-accuracy instrument that is used for simple, low-sensitivity measurements. The output of this instrument is affected by dirt and bubbles in the sample and by drift in the detector circuit.

Split-Beam Analyzer

The split-beam UV analyzers use a single-beam optical system (Figure 8.61k). A single sample cell is located between the source and the detectors. A beam splitter (semitransparent mirror) is placed at the outlet of the sample to create two paths for the radiation energy. There is one beam for the measuring wavelength and one beam for the reference wavelength.

Interference filters and/or broadbrand filters are used to isolate the desired wavelengths. The reference wavelength is selected in a region where the component of interest absorbs weakly or, preferably, not at all.

One beam is directed to the measuring photomultiplier (PMT) tube through an optical filter, which passes light at the measuring wavelength. The other beam is directed to the reference PMT through an optical filter, which passes light at the reference wavelength. The phototubes convert both light signals to electric currents proportional to the light intensity in each beam. The outputs of the phototubes are compared by the amplifier, which provides an output signal that is proportional to the concentration of the measured component. This output signal is reported on the output meter of the control section of the analyzer.

The use of the split-beam design with a reference detector offers the advantage of minimizing or eliminating the effect of other weak UV absorbers in the sample. In addition, changes in source intensity, sample turbidity (dirt or bubbles in the sample), and dirt buildup on the cell windows are seen equally in both wavelengths and do not affect the measurement as long as the absolute energy intensity does not drop below the sensitivity of the detector.

The three housings of the analyzer are easily separated. For most applications, the split-beam system offers high sensitivity and accuracy, low drift, and moderate cost.

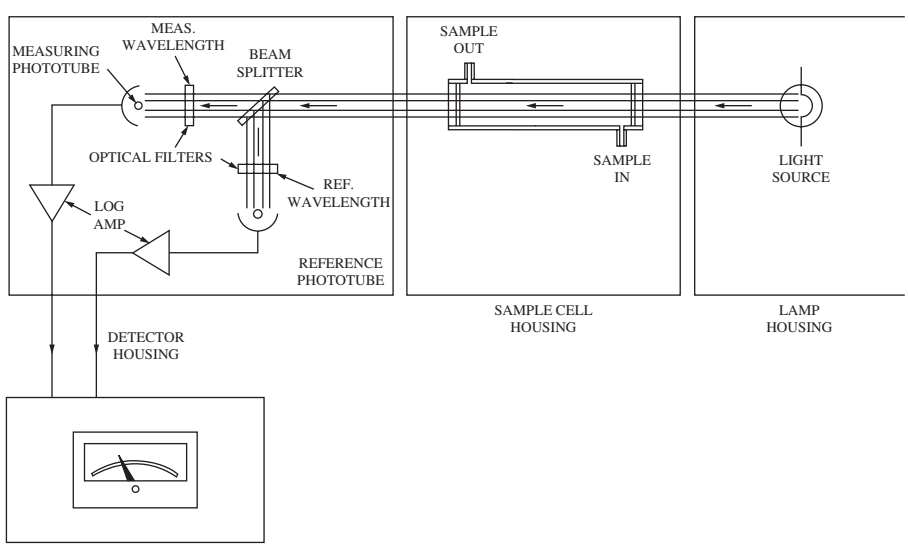

FIG. 8.61k
Split-beam photometer.

© 2003 by Béla Lipták

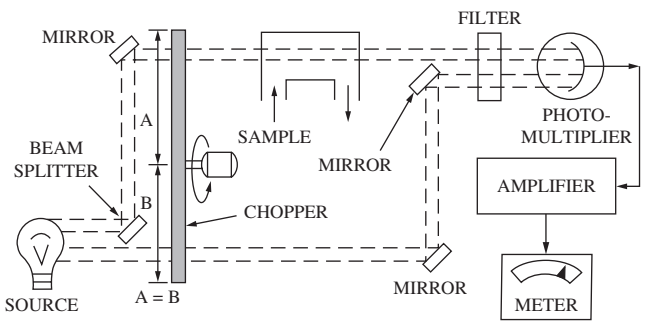

FIG. 8.61l
Dual-beam, single-detector analyzer.

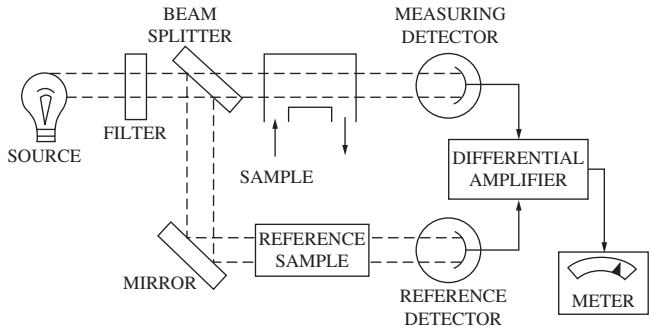

FIG. 8.61m
Dual-beam, dual-detector analyzer.

Dual-Beam, Single-Detector Analyzer

The dual-beam, single-detector UV analyzer uses two optical paths, a single sample cell, and a single photomultiplier detector (Figure 8.61l). One path includes the sample cell, and the other path is used for reference, as it does not pass through the sample. The paths are recombined, and both pass through an interference filter that isolates the wavelengths selected for the measurement.

An interrupter or *chopper* is used to alternately block the measuring and reference beams. This creates pulses of energy through the sample cell that are 180° out of phase with the energy pulses through the reference beam. These pulses are received consecutively by the photomultiplier and, if the sample cell is filled with a nonabsorber, they are equal in magnitude.

When the sample contains the component of interest, the energy pulse intensity and the output of the detector for the measuring pulse are both reduced. The control amplifier receives these pulse outputs and demodulates, or converts, their ratio to a usable analog signal.

This design gives good compensation for source intensity changes and detector drift, but turbid samples and samples leaving dirt deposits will cause drift. Samples of this nature sometimes require the use of two sample cells and two separate filters—one in each path.

The filters create a measuring and a reference wavelength as in the split-beam, dual-detector system. The sample cells may or may not experience window coating at the same rate, which only partially solves the drift problem. Use of a chopper introduces a moving mechanical member that increases maintenance.

The dual-beam, single-detector system offers high sensitivity and accuracy at moderate cost, but zero drift may occur if the process sample is dirty.

Dual-Beam, Dual-Detector Analyzer

The dual-beam, dual-detector design isolates the wavelength used for the measurement before the beam splitter (Figure 8.61m) and uses separate phototubes for the measuring and reference wavelengths. This design is a combination of the optics of the dual-beam, single-detector (see Figure 8.61l) and the detector of the split-beam analyzer (see Figure 8.61k).

This design provides performance similar to that of the dual-beam, single-detector design. It provides high sensitivity and good accuracy at a moderate cost, but dirt in the samples can create drift errors.

Flicker Photometer

The flicker photometer uses a single-cell optical bench (Figure 8.61n) and a rotating disc with two interference filters. The radiation transmitted by the sample cell alternately passes through these filters, which are selected to produce the desired measuring and reference wavelengths. The detector

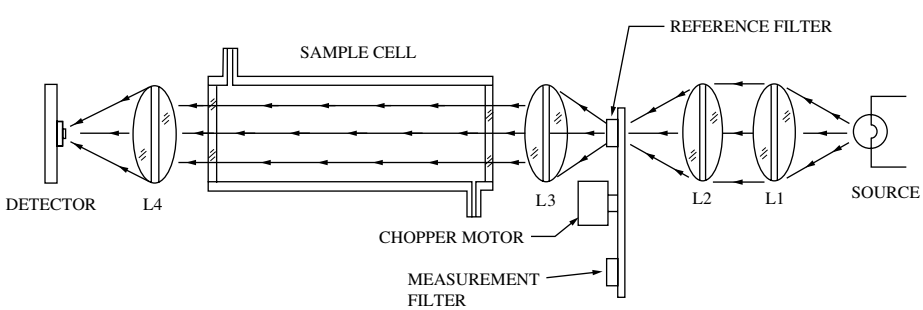

FIG. 8.61n
Rotating fixed filter photometer. (Courtesy of ABB Inc., Analytical Products.)

© 2003 by Béla Lipták

receives these energy pulses, and the amplifier calculates their ratio, which changes as the concentration of the component of interest varies.

A schematic of a rotating fixed filter photometer is shown in Figure 8.61n. The light from the source passes through lenses L1 and L2 and is focused through the reference, and the measurement filters on the rotating filter wheel. A chopper motor is used to rotate the filter wheel. The light is chopped into reference and measure signals. The chopped light passes through lens L3, where the light is collimated before entering the sample cell. The collimated light passes through the sample cell and onto lens L4, where the light is focused onto the detector.

The electronics of the analyzer calculate the log of the ratio of the reference and measurement signals. This calculated output is proportional to the concentration of the measured component. Rotating-filter photometers compensate for source decay, for dirt or bubbles in the sample, for detector drift, and for cell window obscuration, because these changes equally affect the reference and measurement signals.

The use of a single detector eliminates drift in analyzer response, which can result from uneven aging of multiple detectors. The use of a rotating filter introduces moving parts that require maintenance. Accuracy and stability are good, and cost is moderate.

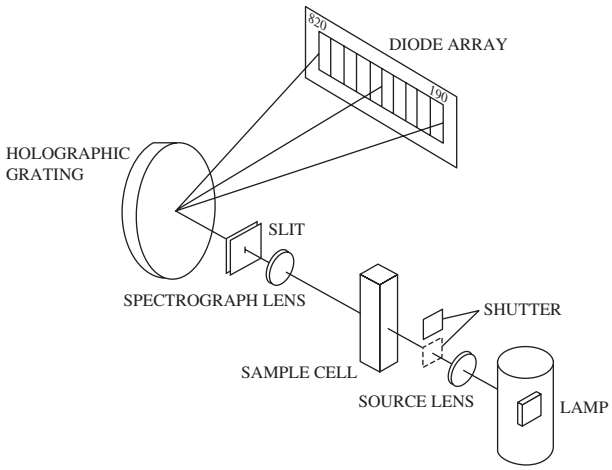

FIG. 8.61o
Photodiode array spectrophotometer.

Photodiode Array Spectrophotometers

Photodiode array (PDA) spectrophotometers monitor all wavelengths in the spectrum simultaneously. A schematic of a diode array instrument is presented in Figure 8.61o.[2]

The light from the source passes through a lens and a shutter and through the sample cell. The light passes into the detector assembly, where it is focused onto a slit and onto a holographic grating, which disperses the light that strikes the PDA detector. The diode array detector is a series of linearly spaced silicon photodiode detectors that measure absorbance at a specific spectral bandwidth.

The advantage of this design is that the spectrum is scanned without any moving parts except for the shutter. Data from the PDA detectors is acquired in parallel, which results in a fast analysis time. Most of the work with PDA detectors has been in the UV/VIS region, but the short-wavelength NIR region (800 to 1100 nm) is utilized in some PDA devices.

Analyzers are also available that couple fiber-optic cables (Section 8.23) with PDA devices (Figure 8.61p). Analysis of

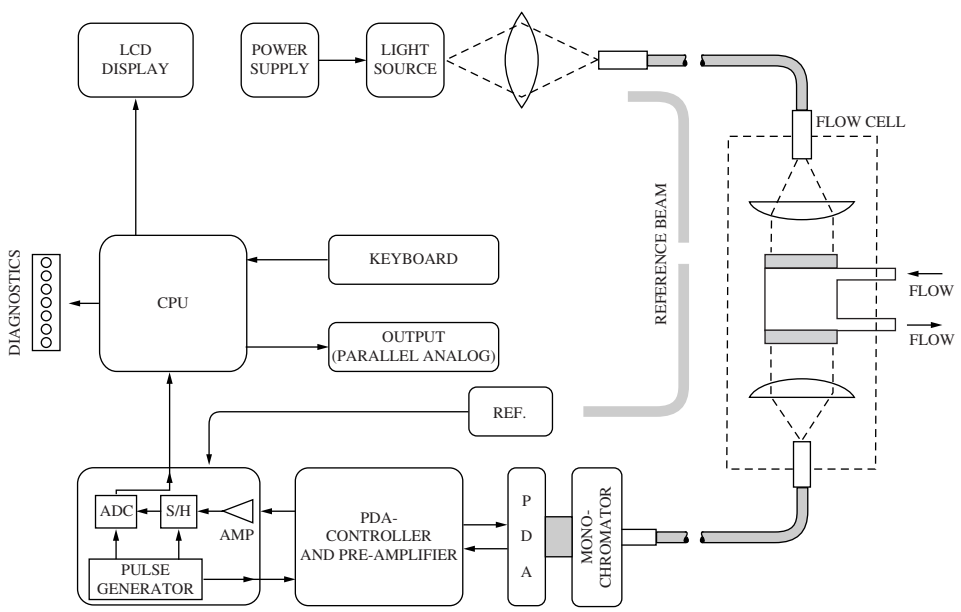

FIG. 8.61p
Photodiode array-type UV analyzer with fiber-optic cables.

© 2003 by Béla Lipták

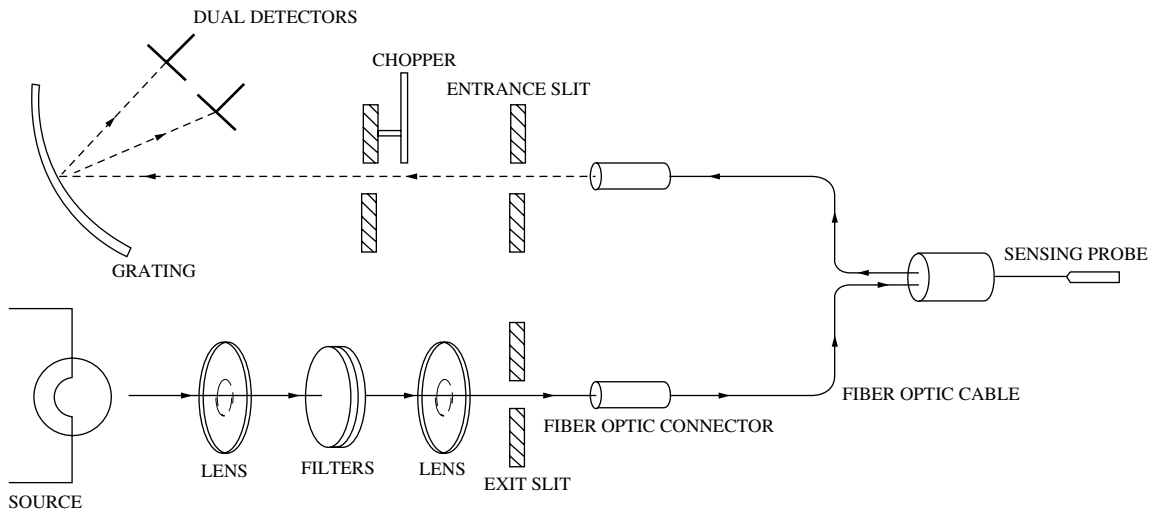

FIG. 8.61q
Scanning spectrophotometer with fiber-optic interfacing sensing probe.

hydrogen sulfide and sulfur dioxide in sulfur recovery and the determination of octane number are two examples of PDA applications.

Scanning Spectrophotometers

Scanning spectrophotometers are dispersive devices that normally utilize diffraction gratings to scan across a spectral region. Scanning devices can be used for multiple-component applications. Scanning spectrophotometers can be used in the UV, visible, and NIR regions.

The measurement of moisture, protein, and carbohydrate in wheat and soybeans by Karl Norris of the USDA was one of the prominent early applications of a NIR scanning device. An important development has been the interfacing of fiber-optic wavelengths with conventional scanning spectrophotometers (Figure 8.61q).[3]

The optical waveguide is usually a single fiber-optic cable. An advantage of using fiber optics is the elimination of the sample handling system. In the fiber-optic design, the polychromatic light from the source passes through lenses and filters and onto the fiber-optic cable. The light is transferred along the cable to the sample probe. The sample modified light is then collected by a second fiber cable and transferred to the monochromator, where it is diffracted into individual wavelengths and measured by the detectors.

The data from the analyzer are processed by a personal computer (PC). The PC allows for the use of multivariate calibration techniques such as partial least squares (PLS). The measurement of multi-component solvent mixtures and the determination of octane number for gasoline samples are two typical applications performed on fiber-optic scanning spectrometers.

Retroreflector Probes

Figure 8.61r illustrates a microprocessor-based UV analyzer probe, which can be used for monitoring both sulfur dioxide and nitrogen oxide in stack gas. In this design, the UV light from a deuterium source is projected through the gas measurement cavity inside the filter at the end of the probe. The retroreflector at the tip of the measurement cell returns the measurement beam to a point at which a monochromator separates the light into discrete spectral bands.

The monochromator has two exit slits, one for sulfur dioxide and the other for nitrogen oxide, that allow their corresponding wavelengths to impinge on the detector. By using the second derivative of the absorption spectra, the measurement is compensated for source aging, line voltage variations, broadband absorption, dirt buildup on the optics, and optical misalignment. A small shutter in the monochromator moves back and forth between the NO and the SO_2 beams, providing sequential reading of both at one minute intervals.

The analyzer is provided with self-calibration capability, including auto-zero correction, auto-span check, and correction. The ceramic filter at the probe tip is self-cleaning and self-drying; at preset intervals, a blast of hot, pressurized instrument air is forced into the measurement cavity, which forces the entrained water or tar out of the probe and dries the filter. The analyzer is suitable for stack gas applications where the particulate loading, water vapor content, and temperature are all high (up to 800°F, or 427°C).

The analyzer measures only NO, so, if evaluations of NO_2 or NO_x are needed, additional measurements must be provided. The life of the deuterium lamp can be as short as three months.

© 2003 by Béla Lipták

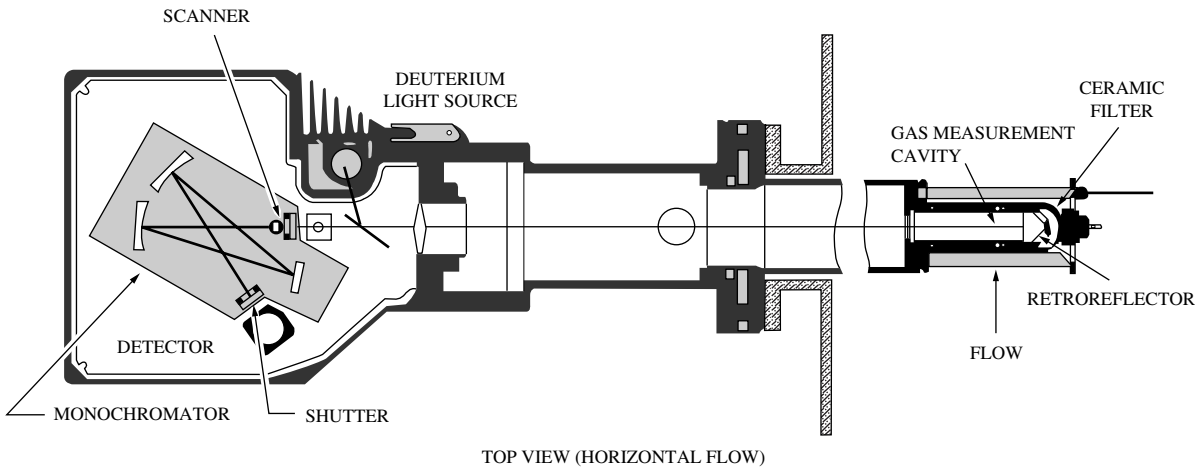

FIG. 8.61r
Self-calibrating, self-cleaning, and self-drying probe-type analyzer simultaneously detects the concentrations of SO_2 and NO at temperatures up to 800°F.

VISIBLE AND NIR PHOTOMETERS

The absorption band and hardware used in visible and NIR photometers are very similar to those used for ultraviolet photometers.

Visible Photometers

Absorption of light in the visible region is also a result of electronic transitions. The visible region of the electromagnetic spectrum (400 to 800 nm) is the region to which the human eye responds. A familiar example of visible light is the dispersion of white light through a prism, which results in a rainbow of colors.

The observation of color arises from the absorption and emission of light by a sample. The intensity of the absorption of light at a characteristic wavelength is proportional to the intensity of the color. Photometers that operate in the visible region are referred to as colorimeters (Section 8.15).

Split-beam and rotating fixed filter designs are also used in visible photometers. The major difference with UV photometers is that a tungsten filament or quartz-halide source might be used. Visible photometers are frequently calibrated to correlate with accepted laboratory color units such as Saybolt, ASTM, and American Public Health Association (APHA). For example, APHA units are used to measure the degree of yellowness of a sample. APHA standards are based on known concentrations of platinum-cobalt solutions.

The following color measurements are examples of visible photometer applications:

1. Yellow color of diesel oil—ASTM units, APHA units
2. Food color—APHA units
3. Color of purified organics—APHA units
4. Process water in paper-making

Near-Infrared Photometers

As detailed in Section 8.27, near-infrared (NIR) photometers have been used for on-line process applications since the 1950s. The absorption bands observed in the NIR are overtone and combination bands of the rotation and vibration bands that occur in the fundamental IR region. Most of the useful bands in the NIR region involve hydrogenic functional groups such as O—H, C—H, and N—H.

The intensity of the overtone and combination bands is much weaker than the fundamental bands. The low molar absorptivity of the NIR region can be used to advantage in process applications, because longer path-length sample cells can be used. The longer cells are less susceptible to plugging by particulate material, and the effects of coatings on the cell windows can also be minimized in the longer cells.

The two methods of sampling used in the NIR are transmission and diffuse reflectance. Transmission measurements are made on clear, homogeneous liquid and gaseous samples. Solid samples that are optically opaque cannot be measured in the transmission mode. Solids and slurries are usually measured by a diffuse reflectance technique in which a portion of the light is transmitted through the sample, and a portion of the light is returned to the surface. The reflected light is measured at the detector.

The measurement of water in organic liquids is a common application for NIR analyzers. Diffuse reflectance measurements of moisture in slurries and solids (Sections 8.33 and 8.34) are also important applications. The following are examples of NIR applications:

1. Water in ethylene dichloride in vinyl chloride processes
2. Water in dimethylacetamide in nylon processes

© 2003 by Béla Lipták

3. Alcohol in hydrocarbons in the petrochemical industry
4. Moisture in paper slurries to check dryer efficiency
5. Moisture in grain in the food industry

CONCLUSIONS

The packaging of ultraviolet and visible analyzers usually separates the amplifier/controller from the optical system. Some designs provide complete housing separation of the sample cell to isolate the electrical components from the flowing sample. The sample cell can then be temperature controlled when necessary, independent of the remaining optical system.

Vapor bubbles cannot be tolerated in the sample, because they will generate noise in the optical reading. If a gas sample pressurized cell is used, the cell pressure must be kept constant.

The UV analyzer has the unique and convenient feature that it offers a simple means of checking the calibration by use of a selected interference or broadband filter. Once the calibration (using known samples) is completed, a filter that absorbs at the wavelengths of interest can be used thereafter. The filter is selected to give equivalent absorbance of some percentage of full scale when placed in the measuring beam with a nonabsorber in the sample cell. Nitrogen or water is commonly used to purge the cell during this operation.

On-line photometers and spectrophotometers are widely used for composition measurements in the UV-VIS-NIR spectral regions. Photometers are nondispersive devices that are used to make measurements at selected discrete wavelengths. Photometers are normally used for single-component measurements in process control applications. Spectrophotometers are dispersive devices that scan across a spectrum of wavelengths.

Spectrophotometers are often used for multiple-component measurements. The UV analyzer can be used to measure certain compounds having ultraviolet absorption characteristics if other UV-absorbing compounds are not present in the sample or if their presence can be compensated for.

Samples may be gas or liquid, but the sample must be relatively free of dirt and must be in a single phase. Trace measurements are also possible. Fiber-optic diode array designs can provide multicomponent liquid composition analysis, and retroreflector probes can provide self-cleaning and self-calibrating stack gas composition measurement.

References

1. Thomas, M. J. K. et al., *Ultraviolet and Visible Spectroscopy,* John Wiley & Sons, New York, 1996.
2. Saltzman, R. S., Small, J. R., and Steichen, J. C., *New Process UV/VIS Diode Array Analyzer Developments, Proc. 34th ISA Analysis Division Symp.,* 1988.
3. Zetter, M., On-line optical spectroscopy teams up with fiber optics, *Instrum. Control Syst.,* April 1987.

Bibliography

Annual Book of ASTM Standards, American Society for Testing and Materials, West Conshohocken, PA, 2002, www.normas.com/ASTM/.

Barshad, Y., UV/VIS spectrometer, *Meas. Control,* June 1992.

Callis, J. B. and Christian, G. D., *Trace Analysis: Spectroscopic Methods for Molecules,* John Wiley & Sons, New York, 1986.

Clark, B. J. et al., *UV Spectroscopy,* Kluwer Academic, New York, 1993.

Denney, R. C. and Sinclair, R., *Visible and Ultraviolet Spectroscopy,* John Wiley & Sons, Chichester, UK, 1987.

Dubois, R., van Vuuren, P., and Tatera, J., "New sampling sensor initiative: an enabling technology," 47th Annual ISA Analysis Division Symposium, Denver, CO, April 14–18, 2002.

Gorog, S., *Ultraviolet-Visible Spectrometry in Pharmaceutical Analysis,* CRC Press, Boca Raton, FL, 1995.

Lang, L., *Absorption Spectra in the Ultraviolet and Visible Region,* Vol. 20, Academic Press, New York.

Martin, J. M., Ultraviolet determination of total phenols, *J. WPCF,* 399(1), 21–32.

Mayes, D. M., Applications of a photodiode array spectrophotometer for the short wavelength near infrared region, Ph.D. dissertation, University of Washington, 1990.

Meyers, R. A., Ed., *Encyclopedia of Analytical Chemistry: Instrumentation and Applications,* John Wiley & Sons, New York, 2000.

Mitchell, M. K. and Stapp, W., *Field Manual for Water Quality Monitoring,* 12th ed. LaMotte Company, Chestertown, MD, 2000.

Myers, J. et al., Ultraviolet open-path monitor, ETV Advanced Monitoring Systems Center, Opsis Inc., AR-500, 2000.

Nichols, G. D., *On-Line Process Analyzers,* John Wiley & Sons, New York, 1988.

Nowicka-Jankowska, T. et al., *Analytical Visible and Ultraviolet Spectrometry,* Elsevier Health Sciences, New York, 1985.

Rao, C. N. R., *Ultra-Violet and Visible Spectroscopy,* 3rd ed., Butterworth-Heinemann, 1967.

Saltzman, R. S., Process steam analyzers based on ultraviolet absorption changes with pH, *Proc. 16th Symp., Analysis Division of ISA,* Pittsburgh, PA, May 1970.

Sherman, R. E., *Process Analyzer Sample-Conditioning System Technology,* John Wiley & Sons, New York, 2002.

Smith, A. L., *Applied Infrared Spectroscopy,* John Wiley & Sons, New York, 1979.

Thomas, M. J. K. et al., *Ultraviolet and Visible Spectroscopy,* John Wiley & Sons, New York, 1996.

Thomson, M., "Interfacing sampling handling systems for on-line process analyzers, www.measurementation.com.au/tp-1.htm, January 14, 2002.

Trigg, G. L., Ed., *Encyclopedia of Applied Physics,* Vol. 23, *Ultraviolet and Visible Light Spectrometers,* John Wiley & Sons, New York, 1998.

Van den Berg, F. W. J., Hoefsloot, H. C. J., and Smilde, A. K., "Selection of optimal process analyzers for plant-wide monitoring," *Anal. Chem.,* 74(13), 3105–3111, 2002.

© 2003 by Béla Lipták

8.62 Viscometers—Application and Selection

C. H. KIM (1969, 1982) **B. G. LIPTÁK** (1995, 2003)

Definition of Viscosity:	Absolute viscosity is the ratio of applied stress to resulting shear velocity; kinematic viscosity is absolute viscosity divided by density.
Viscosity Units:	Dynamic (absolute), poise = 1.0 dyne-sec/cm^2 = 100 centipoise (cP) = 0.1 pascal-second (Pas or PI); Pas = 1.0 newton-second/m^2= 1.0 poiseuille (PI) = 1000 cP = 0.67 lbm/ft-sec Kinematic viscosity, stoke = 1.0 cm^2/sec = 100 centistokes (cSt) = 0.00107 ft^2/sec
Types of Viscous Behavior:	Newtonian or non-Newtonian; non-Newtonian fluids include pseudoplastic, dilatant, plastic solid, thixotropic, and rheopectic types.

INTRODUCTION

In industrial plants, viscosity measurements serve to determine the resistance of fluids to flow, define the behavior of various concentrations of slurries, or measure the molecular weight of polymers. Absolute viscosity is the ratio of applied stress to resulting shear velocity, whereas kinematic viscosity is absolute viscosity divided by density. Viscometers are available to evaluate these and other characteristics in the laboratory and on line in a producing plant environment.

Sections 8.62 through 8.64 deal with viscosity measurement. This section provides some general orientation on viscometer selection and application, Section 8.63 discusses laboratory units, and Section 8.64 covers industrial viscometers. In addition, the reader is referred to the related detectors that measure consistency (Section 8.18) and molecular weight (Section 8.35).

This section begins with the discussion of viscous behavior as it is governed by the laws of Stokes and Hagen–Posieuille. This is followed by an orientation table that provides guidelines to assist the reader in the selection and application of viscometers, in the form of a listing of the features and capabilities of both laboratory and industrial viscometers. Finally, the section is concluded with some definitions of terms and units that are used in connection with viscometry and with definitions of the different types of viscous behavior exhibited by industrial fluids.

THEORY OF VISCOUS BEHAVIOR

Viscosity is a fluid property that defines the fluid's behavior when in motion. Because a fluid is a substance that is in a state of continuous deformation when subjected to a shear stress (Figure 8.62a), the rate of that deformation is a function of the resistance offered by the fluid, termed its *viscosity.* For gases and newtonian liquids at constant pressure and temperature, this resistance to deformation is called *absolute viscosity.*

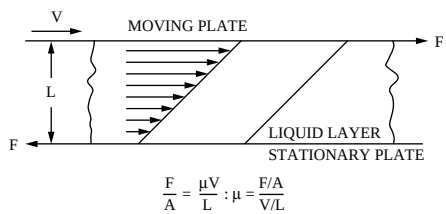

FIG. 8.62a
Viscosity is a fluid property that describes the amount of deformation (V/L) that will result from a particular shear (F/A) that is applied to the fluid.

The viscosity of non-Newtonian fluids varies, even when the static pressure and temperature are fixed, because it also changes as a function of the applied shear stress. In some cases, viscosity may also vary with duration of the applied shear stress. The viscosity of non-Newtonian fluid therefore is frequently called *apparent viscosity.*

STOKE'S LAW

Stoke's falling ball principle, published in 1851, was based on his investigations of spheres falling through liquids.

$$v = \frac{2r^2(\rho_S - \rho_L)g}{p\mu} \qquad \textbf{8.62(1)}$$

where

v = terminal velocity of fall, cm/sec
r = radius of sphere, cm
ρ_s = density of sphere, g/cm^3

© 2003 by Béla Lipták

ρ_L = density of liquid, g/cm^3
g = gravity, cm/sec^2
μ = coefficient of viscosity, poise

Hagan–Poiseuille Law

Capillary viscometers measure viscosity by detecting the flow or the pressure drop of newtonian process liquid through a capillary under isothermal laminar flow conditions. According to the Poiseuille law, the pressure drop of a newtonian liquid passing through a capillary tube is directly proportional to its viscosity if the fluid's temperature and flow rate are kept constant.

$$\mu = (Kd^4\Delta P)/VL \qquad \textbf{8.62(2)}$$

where
μ = absolute viscosity, centipoise
K = a constant
d = inside diameter of a capillary tube, inches
ΔP = pressure drop across the capillary tube, PSI
V = flow rate, GPH
L = length of the capillary tube, inches

Kinematic Viscosity

The capillary-tube viscometer can detect the kinematic viscosity in stokes by measuring both the pressure gradient and the volumetric flow rate in a cylindrical tube of precisely known dimensions. The following equation describes the Hagen–Poiseuille law, which governs the flow of fluids through capillaries:

$$\upsilon = \frac{\mu}{\rho} = \frac{\pi ghR^4t}{8VL} \qquad \textbf{8.62(3)}$$

where
υ = kinematic viscosity, stokes (cm^2/sec)
μ = absolute viscosity, poises (dyne-sec/cm^2)
ρ = density of liquid, g/cm^3
g = acceleration due to gravity, cm/sec^2
h = vertical distance between ends of capillary, cm
R = radius of capillary, cm
L = length of capillary, cm
V = volume of liquid flowing, cm^3, in time t, sec

Intrinsic Viscosity

To determine molecular weight of a polymer, the intrinsic viscosity or limiting viscosity must be determined (Figure 8.62b). Intrinsic viscosity $[\eta]$ is defined by the relationship,

$$[\eta] = \lim_{c\to 0}\frac{\eta-\eta_0}{\eta_0 c} = \lim_{c\to 0}\frac{\eta_{sp}}{c} \qquad \textbf{8.62(4)}$$

$$\eta_{sp} = \frac{\eta-\eta_0}{\eta_0} \qquad \textbf{8.62(5)}$$

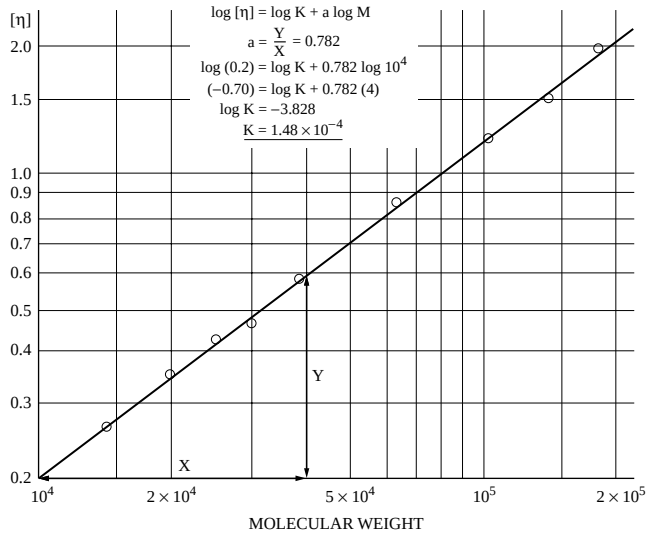

FIG. 8.62b
Viscometer calibration relates intrinsic viscosity to molecular weight.

where
η = viscosity of the solution
η_0 = viscosity of the solvent
c = solution concentration in grams per milliliter or grams per deciliter

Another definition of intrinsic viscosity is

$$[\eta] = \lim_{c\to 0}\frac{\text{In } \eta/\eta_0}{c} \qquad \textbf{8.62(6)}$$

Intrinsic viscosity is related to molecular weight as expressed by the Mark–Houwink equation,

$$[\eta] = KM^a \text{ or } \log [\eta] = \log K + a \log M \qquad \textbf{8.62(7)}$$

where K and a are constants for a given polymer-solvent system at the temperature of the viscosity measurement.

Non-Newtonian Fluids

The resistance to deformation (or viscosity) of Newtonian substances is constant as the shear rate (velocity gradient) changes, if other such variables as temperature and pressure are also constant. Their shear stress is a linear function of the shear rate they experience while undergoing continuous deformation.

Non-Newtonian fluids do not have such a linear relationship between shear stress to shear rate, even under constant pressure and temperature. The viscosity of non-Newtonian fluids varies as a function of shear rate and, in some cases, it also varies as a function of time. Therefore, one cannot speak of the viscosity of a non-Newtonian fluid without specifying the shear stress or the velocity gradient (shear rate) at

© 2003 by Béla Lipták

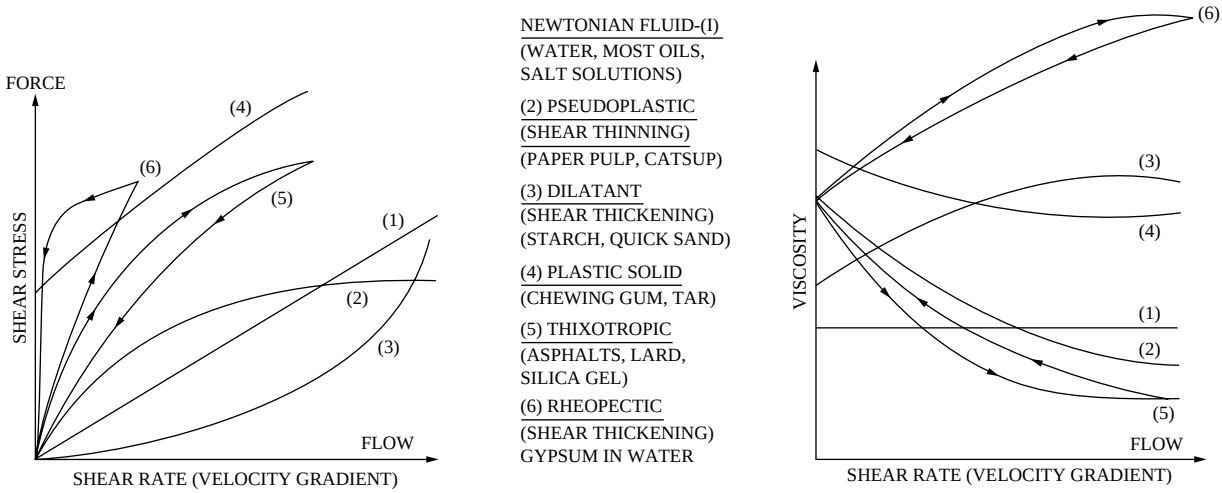

FIG. 8.62c

The viscosity and shear stress of Newtonian and non-Newtonian fluids when these fluids are deformed at various shear rates (velocity gradients).

which the resistance to deformation is of interest. Consequently, the viscometers used to measure non-Newtonian substances must be provided with accurate means of detecting the velocity gradient.

Newtonian Fluids Figure 8.62c illustrates the behavior of newtonian and non-Newtonian fluids. When a fluid is newtonian (curve 1 in Figure 8.62c), its viscosity is unaffected by share rate (flow velocity), and the relationship between force (stress) and resulting flow (velocity) is linear. Some of the newtonian fluids include gasoline, kerosene, mineral oils, water, and salt solutions in water.

Pseudoplastics Pseudoplastics (curve 2) are shear-thinning materials whose apparent viscosity drops as flow (shear rate) rises. Some such substances exhibit a yield stress above which the apparent viscosity drops, so that a unit increase of driving force results in more and more flow. Pseudoplastic materials include catsup, paper pulp, and printer's ink.

Dilatant Fluids Dilatant (curve 3) materials are shear-thickening substances. Their apparent viscosity increases as the flow (shear rate) rises, and more and more stress (force) is required to obtain the same increase in flow. Dilatant materials include quicksand, starch, peanut butter, and many candy compounds.

Plastic Solids Plastic solids (curve 4) are true plastics in the sense that they normally behave like solids, but, when the shear stress (force) reaches their yield point, they start to behave as viscous fluids and start to "cold flow." Most plastics, chewing gum, tar, and some oils exhibit this behavior.

Thixotropic Materials Thixotropic materials (curve 5) are usually pseudoplastics (shear-thinning substances), but they exhibit hysteresis. They seem to "remember" their past history and, for example, when reagitated will require less horsepower than was required during the first agitation. Thixotropic substances include asphalt, lard, silica gel, most paints, glues, and fruit juice concentrates.

Rheopectic Substances Rheopectic substances (curve 6) also display hysteresis, but, instead of a shear-thinning behavior, they display shear thickening. Their viscosity appears to increase, and some will "set" after some duration of agitation. Gypsum in water, for example, behaves in this manner.

Apparent Viscosity Readings It is important to understand that the apparent viscosity of many different substances depends on the design of the viscometer that is measuring it. Each viscometer exposes the process sample to a different experience in terms of shear stress and shear velocity, so non-Newtonian substances will register different apparent viscosity readings.

In process control, this is not a serious problem, because one is likely to use the same viscometer all the time, and we are not interested so much in the absolute viscosity of the product as in making the same product one day to the next. On the other hand, when viscosity specifications are passed on from one plant to another, it is essential that the viscometer used in making the measurement be specified.

Conversion among Units of Viscosity

Newton's hypothesis defines absolute viscosity of fluid as

$$\text{absolute viscosity} = \frac{\text{shear stress}}{\text{shear rate}} = \frac{\text{shear stress}}{\text{velocity gradient}} \qquad \textbf{8.62(8)}$$

$$= \frac{(F/A)g_c}{(u/l)}, \quad \text{poise}$$

© 2003 by Béla Lipták

TABLE 8.62d
*Viscosities of Different Materials in Different Units of Viscosity, Measured at Constant Temperature of 70°F (23°C)**

Saybolt Universal (SSU)	Centistokes (cSt)	Centipoise[a] (cp)	Typical Liquid @ 70°F[b]
31	1.00	1.0	Water
35	2.56	2.05	Kerosene
50	7.40	5.92	No. 2 fuel oil
80	15.7	12.6	No. 4 fuel oil
100	20.6	16.5	Transformer oil
200	43.2	34.6	Hydraulic oil
300	65.0	52.3	SAE 10W oil
500	110	88.0	SAE 10 oil
1,000	220	176	SAE 20 oil
2,000	440	352	SAE 30 oil
5,000	1,100	880	SAE 50 oil
10,000	2,200	1,760	SAE 60-70 oil
50,000	10,800	8,640	Molasses B

[a]Centistokes × specific gravity = centipoise. Specific gravity is assumed to be 0.8 except in the case of water.
[b]Use actual specific gravity for liquid in question.
*Courtesy of Cole-Parmer Instrument Co.

TABLE 8.62e
Conversion between Centipoise (cP) and Other Units of Absolute Viscosity

Name (Definition)	Abbreviation	Value Equivalent to 1 cP
kgf-sec/m^2	—	0.00010197
kgm/m-hr	—	3.6
lbf-sec/ft^2	—	0.00002088
lbf-sec/in.^{2}	—	0.000000175
lbm/ft-sec	—	0.000672
lbm/ft-hr	—	2.42
lbm/in.-sec	—	0.000056
Pascal-seconds (N-sec/m^2)	Pas	0.001
Poises	Ps	0.01
Poiseuille (N-sec/m^2)	PI	0.001

where
F = total load force, gram force
A = area of plate, cm^2
l = thickness of fluid between plates, cm
u = velocity, cm/sec
g_c = Newton's acceleration caused by gravity, 980.665 (gram mass) (cm)/(sec^2) (gram force)

For the viscosity of common liquids in a variety of units, see Table 8.62d, and refer to Table 8.62e for conversion factors between centipoise (cP) and other units of absolute (dynamic) viscosity. For additional viscosity conversion tables and charts, refer to Tables A.2p, A.2q, and A.2r in Appendix A.2.

Kinematic Viscosity The value of the kinematic viscosity (in cm^2/sec units) can be obtained approximately from the indications of the following viscometers (which all give their readings in seconds) by the associated equations.

Saybolt Universal,
when $32 < t < 100$, $\upsilon = 0.00226t - 1.95/t$
when $t < 100$, $\upsilon = 0.00220t - 1.35/t$

Saybolt Furol,
when $25 < t < 40$, $\upsilon = 0.00224t - 1.84/t$
when $t > 40$, $\upsilon = 0.216t - 0.60/t$

Redwood No. 1 (English),
when $34 < t < 100$, $\upsilon = 0.00260t - 1.79/t$
when $t > 100$, $\upsilon = 0.00247t - 0.50/t$

Redwood Admiralty
(English), $\upsilon = 0.027t - 20/t$
Engler (German), $\upsilon = 0.00147t - 3.74/t$

While the kinematic viscosity unit of stokes are not much used anymore, one stoke is equivalent to 100 centistokes (cSt), or 0.00107 ft^2/sec, or 0.0001 m^2/sec.

VISCOMETER SELECTION AND APPLICATION

Table 8.62f, which is an orientation table, lists all available viscometers and compares the features of the various designs to assist the reader in selecting the right one for the application at hand. When several choices appear to be acceptable for a particular application, the reader is advised to read about each in the following sections before making the final selection. Section 8.63 covers the laboratory-type viscometer designs, and Section 8.64 describes the industrial in-line detectors.

Selection

In selecting a viscometer for a specific task, the following should be determined:

1. Is this instrument for laboratory use or for continuous measurement in the plant for control?
2. What type of materials will this viscometer handle?
   a. Highly volatile? Closed system needed?
   b. Newtonian fluids, non-Newtonian fluids, or both?
   c. Rheological characteristics of the material—plastic, thixotropic, dilatant, etc.

© 2003 by Béla Lipták

TABLE 8.62f

Orientation Table for Industrial Viscometers

Application	Type of Design	Features	Provides Continuous Signal	In-line Device	Laboratory Device	Local Readout	Remote Readout Trans.	Temp. Compensation	Fluids: Gas	Fluids: Newtonian	Fluids: Non-Newtonian	Maximum Design Pressure, PSIG. (1 Bar = 14.2 PSI)	Maximum Design Temperature, °F (°C = [°F – 32]/1.8)	Inaccuracy (±%) (1) Based on Full Scale (2) Based on Measurement	Minimum sample Size or Flow Rate
Laboratory	Bubble time	Manual			✓	✓				✓		ATM.	77	2–10(2)	13 CC
	Capillary tube	Manual timing			✓	✓				✓		ATM.	300	0.35(2)	20 CC
		Auto timing		✓	✓	✓	✓			✓		ATM.	300	0.01(2)	20 CC
	Capillary extrusion	Influx efflux			✓	✓				✓	✓	100	300	2.0(2)	0.7 CC
					✓	✓	✓			✓	✓	5,000	640	2.0(2)	30 CC
	Efflux cup	Saybolt			✓	✓				✓		ATM.	250	0.1(2)	60 CC
		Ford cup		✓	✓	✓				✓		ATM.	80	2.0(2)	150 CC
		Zahn cup			✓	✓				✓		ATM.	80	2.0(2)	44 CC
		Auto timing			✓	✓	✓			✓	✓	ATM.	80	5.0(2)	—
	Falling ball	Manual			✓	✓			✓	✓		ATM.	300	0.1–1(2)	30 CC
		Automatic		✓	✓	✓				✓	✓	15,000	350	0.1–1(2)	70 CC
	Falling needle	Manual			✓	✓				✓	✓	ATM.	400	0.5–1(2)	2–10 CC
		Automatic			✓	✓	✓	✓		✓	✓	ATM.	400	0.5–1(2)	2–10 CC
	Rotational	Coaxial-cylinder			✓	✓	✓			✓	✓	ATM—20,000	80–500	1.0(2)–2.0(1)	1–500 CC
		Cone and plate			✓	✓	✓			✓	✓	ATM.	750	0.5(2)	0.1 CC
	Piston	Travel time	✓	✓	✓	✓	✓	✓		✓	✓	10,000	600	2(2)	In-line
Industrial	Continuous capillary	Differential pressure	✓	✓	✓	✓	✓			✓		670	900	1–2(1)	1–4 GPH
		Back pressure	✓	✓	✓	✓	✓			✓		500	210	1.0(1)	1 GPH
	Falling element	Ball or slug		✓	✓	✓	✓	✓		✓	✓	300	350	1.0(1)	—
		Piston		✓	✓	✓	✓	✓		✓	✓	500	650	1.0(1)	—
	Float	Single float	✓	✓	✓	✓	✓			✓	✓	650	450	4.0(2)	0.75–2 GPM
		Two-float	✓	✓	✓	✓				✓		300	450	2–4(2)	0.25–2.5 GPM
		Concentric	✓	✓	✓	✓	✓	✓		✓	✓	650	450	2–4(2)	2 GPM
	Oscillating	Blade		✓	✓	✓	✓			✓	✓	375	150	1.0(1)	Up to 6.5 fps (2 m/s)
		Piston	✓	✓	✓	✓	✓	✓		✓	✓	10,000	600	2.0(2)	—
		Torsional	✓	✓	✓	✓	✓	✓		✓	✓	5,000	850	2.0(2)	—
	Plastometer	Cone and plate	✓	✓	✓	✓	✓				✓	100	400	0.5(1)	25 CC
		Kneader	✓	✓	✓	✓	✓				✓	ATM.	570	1.0(1)	80 CC
		Capillary			✓	✓	✓				✓	5,000	570	2.0(1)	0.6 #/HR
	Rotational	Cone disc sphere	✓	✓	✓	✓	✓	✓		✓	✓	1,000	650	1.0(1)	—
		Agitator power	✓	✓		✓	✓			✓	✓	125	200	~5.0(1)	—
		Double cylinder	✓	✓			✓			✓	✓	145	300	1.0(1)	—
	Vibrational	Reed	✓	✓	✓	✓	✓	✓		✓	✓	3,000	300	1.0(1)	—

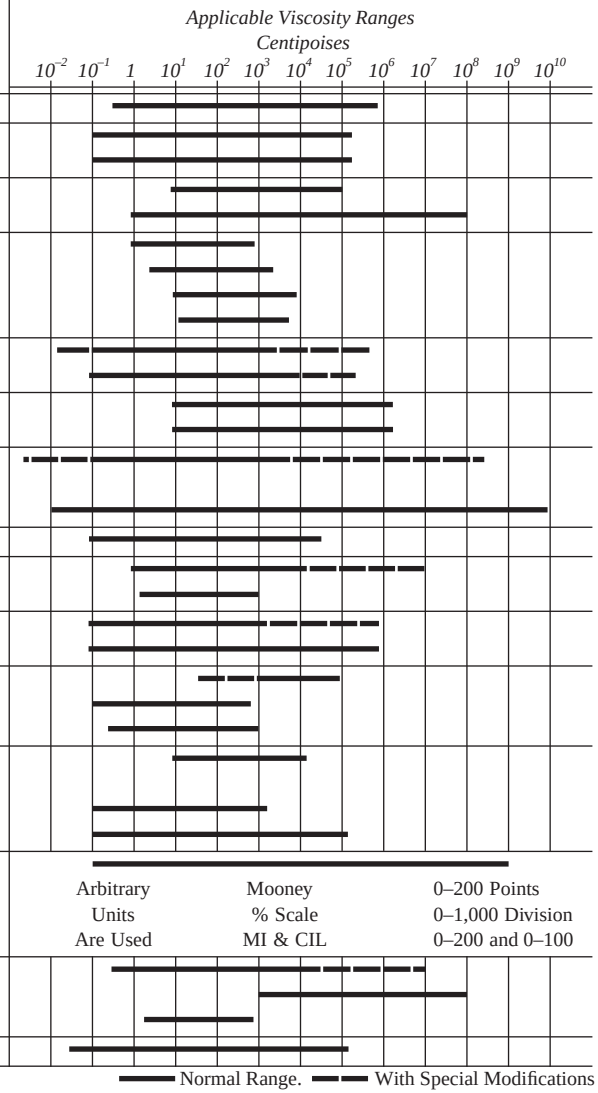

© 2003 by Béla Lipták

d. Corrosiveness of the fluids
e. Does the fluid contain solids? What are the special characteristics of this slurry or emulsion? Plastic, thixotropic, dilatant, etc.?
f. What are the operating temperatures and pressures of the fluids?
g. Do the sample composition and/or viscosity (due to reaction or time lag) change with time? Is a low lag time for manual sampling and testing sufficient, or is on-stream measurement essential?
h. What is the relationship between viscosity and operating temperature?

3. Area classification—does the viscometer need to be explosion proof?
4. What are the viscosity ranges to be measured?
5. What levels of accuracy (maximum error allowable), sensitivity, and repeatability (for continuous process viscometer) are required?
6. What special features are needed?
   a. Remote indication or recording
   b. Automatic operation
   c. Automatic closed-loop control
   d. Temperature compensating system
7. What is the viscometer response time requirement?
8. What are the flow conditions—laminar or turbulent?

Applications

A viscosity measurement can be of value for one of the following two reasons:

1. It is very difficult to size a pump, pipeline, orifice meter, or agitator without knowing the viscosity of the process fluid. In any operation where liquids are used (spraying, coating, or dipping processes), the viscosity of the fluid determines the effectiveness of the process and the quality of the finished product. In short, viscosity is one of the most important process properties.
2. Viscosity readings can vary as a function of other process variables. These include molecular weight and its distribution in polymers, lubricating oils, and other substances, as well as the concentration, specific gravity, color, size, shape, and distribution of solids in a slurry or in an emulsion. All of these can cause viscosity variations.

Viscometers can be used for several purposes, primarily (1) to ensure that the finished product meets specifications, (2) to perform routine laboratory testing, (3) for scientific research, and (4) for in-line process control. Each is described briefly below.

Finished Product Specification For such applications, the appropriate type of viscometer has been specified by industry standards for product testing. Test procedures should be carefully followed and test results correctly reported.

Routine Laboratory Testing Simple-to-operate, easy-to-clean and direct-reading viscometers should be considered for this purpose. The coaxial-cylinder type viscometer is well suited, because it is inexpensive and meets most of the above requirements. The efflux-cup viscometer is recommended for field laboratory testing work. If the available sample size is small (less than 1 cc), then modified coaxial-cylinder or cone-and-plate rotating viscometers should be considered.

Scientific Research Study For scientific research purposes, accuracy and versatility should be the main selection considerations. Cone-and-plate rotational viscometers are the most versatile units but are also the most expensive. If extreme accuracy is desired, consider the automatic capillary-tube viscometer (See Figure 8.62g). If it is important to record the results to maintain a permanent record, both of the previously mentioned viscometers have the appropriate capability. For the measurement of gas and vapor viscosity, the falling-ball viscometer is the best option.

In-Line Process Control In selecting an in-process viscometer, cost, repeatability, sensitivity, construction materials, reliability, response time, and ease of cleaning should all be considered. Vibrating-reed viscometers are successfully used in the polymer industry. Rotating-cone and agitator power viscometers have been successfully employed in the paper industry. Continuous capillary viscometers are widely applied in the petroleum industry. The manufacture of synthetic rubbers and certain plastics would be almost impossible without the plastometers.

Continuous viscometers are reliable. Viscosity measurement need not be an expensive and time-consuming operation. Continuous in-line viscometers are available to satisfy most process needs. Even such unique applications as the measurement of the viscosity of molten steel can be handled. Viscometer signals can be readily sent over digital networks and be accepted by process computers, which can calculate other related fluid properties or perform closed-loop control.

TERMINOLOGY

Absolute (dynamic) viscosity (μ). Constant of proportionality between applied stress and resulting shear velocity (Newton's hypothesis).

Apparent viscosity. Viscosity of a non-Newtonian fluid under given conditions. Same as *consistency.*

Consistency. Resistance of a substance to deformation. It is the same as viscosity for a newtonian fluid and the same as apparent viscosity for a non-Newtonian fluid.

Fluidity. Reciprocal of absolute viscosity; the unit in the cgs system is the rhe, which equals 1/poise.

© 2003 by Béla Lipták



FIG. 8.62g
A single process viscosity system can measure absolute (kinematic or dynamic), relative, reduced, and intrinsic viscosities as well as viscosity index. (Courtesy of Brinkmann Instruments Inc.)

Hagen-Poiseuille law (flow through a capillary),

$$Q = \frac{\pi R^4}{8\mu L}(P_1 - P_2) \qquad \textbf{8.62(9)}$$

Kinematic viscosity (υ). Dynamic viscosity/density = $\upsilon = \mu/\rho$.

Pascal-second (Pas). Internationally accepted unit of absolute (dynamic) viscosity. Pas = newton-sec/m^2 = 10 poise = 1000 centipoise.

Poise (μ). Unit of dynamic or absolute viscosity (dyne-sec/cm^2).

Poiseuille (Pi). Suggested name for the new international standard unit of viscosity, the pascal-second.

Relative viscosity. Ratio of absolute viscosity of a fluid at any temperature to that of water at 20°C (68°F). Because water at this temperature has a μ of 1.002 cP, the relative viscosity of a fluid equals approximately its absolute viscosity in cP. Because the density of water is 1, the kinematic viscosity of water equals 1.002 ctks at 20°C.

Saybolt furol seconds (SFS). Time units referring to the Saybolt viscometer with a Furol capillary, which is larger than a universal capillary.

Saybolt universal seconds (SUS). Time units referring to the Saybolt viscometer.

Saybolt viscometer (*universal, furol*). Measures time for given volume of fluid to flow through standard orifice; units are seconds.

Shear viscometer. Viscometer that measures viscosity of a non-Newtonian fluid at several different shear rates. Viscosity is extrapolated to zero shear rate by connecting the measured points and extending curve to zero shear rate.

Specific viscosity. Ratio of absolute viscosity of a fluid to that of a standard fluid, usually water, both at same temperature.

Stoke. Unit of kinematic viscosity υ(cm^2/sec).

Stress. Force/area (F/A).

Velocity gradient (shear). Rate for change of liquid velocity across the stream—V/L for linear velocity profile and dV/dL for nonlinear velocity profile. Units are V–L = ft/sec/ft = sec^{-1}.

Bibliography

Bandrup, J. and Immergut, E., *Polymer Handbook*, 3rd ed., John Wiley & Sons, New York, 1989.

Basker, V. R. et al., Evaluation of an online torsional oscillatory viscometer for kraft black fluid, *Paperi ja Puu/Pulp and Timber,* 82(7), October 2000.

Bourne, M. C., *Food Texture and Viscosity Concept and Measurement*, Academic Press, New York, 1997.

Dealy, J. M., Viscometers for online measurement and control, *Chem. Eng.*, October 1, 1984.

Dutka, A. P. et al., Evaluation of a capillary-coriolis instrument for online viscosity and density measurement, *Proc. TAPPI Process Control, Electrical and Instrumentation Conf.* (ISA), March 1997.

Hallikainen, K. E., Viscometry, *Instrum. Control Sys.*, November 1972.

Helle, H. et al., Comparing a 10 MHz thickness-shear mode quartz resonator with a commercial process viscometer, *Sensors and Actuators B (Chem.),* B81(2–3), January 2002.

Krigman, A., Viscosity measurement: still sticky, but stepping ahead steadily, *InTech*, November 1985.

Langer, G. and Werner, U., Measurements of viscosity of suspensions in different viscometer flows and stirring systems, *Ger. Chem. Eng.*, August 1981.

© 2003 by Béla Lipták

Mansion, D., State of the art in transducers viscometer, *Nouvel Automatisme* (France), June 1984.

Matuski, F. J. and Scarna, P.C., Instrument makes on-line viscosity control of slurries possible, *Control Eng.*, 28(13), 1981.

Mizier, M. O., The measurement of the viscosity of liquids, *Mesures* (France), March 1984.

Rabinovich, V. A. et al., *Viscosity and Thermal Conductivity of Individual Substances*, Begell House, New York, 1997.

Roussel, G. and du Parquet, J., Development of a fully automatic viscometer, Society of Automatic Engineers, Paper #82149, Warrendale, PA, October 1982.

Sheble, N., How do you like your mashed potatoes? *InTech*, June 2002.

Skeist, I., *Handbook of Adhesives*, 3rd ed., Van Nostrand Reinhold, New York, 1989.

Spearot, J. A., Ed., *Oil Viscosity: Measurement and Relationship to Engine Operation*, ASTM, 1989.

Steltzer, W. D. and Schulz, B., Theory and measurement of the viscosity of suspensions, *High Temp.—High Press.*, 15(3), 289–298, 1983.

Viscometers, *Meas. Control*, June 1993.

Walsh, L., *Quality Management Handbook*, Marcel Dekker, New York, 1986.

Wunderlich, T., Ultrasound pulse doppler method as a viscometer for process monitoring, *Flow Meas. Instrum.*, 10(4), 1999.

Zhang, Z. et al., Viscosities of lead silicate slags, *Miner. and Metall. Process.*, 19(1), February 2002.

© 2003 by Béla Lipták

8.63 Viscometers—Laboratory

C. H. KIM (1969, 1982) **B. G. LIPTÁK** (1995, 2003)

Types:	A. Bubble time B. Capillary B1. Manual capillary tube B2. Auto-timing capillary tube B3. Capillary extrusion (influx) B4. Capillary extrusion (efflux) C. Efflux cup C1. Saybolt C2. Ford C3. Zahn C4. Auto timing D. Falling ball D1. Manual D2. Automatic E. Falling needle E1. Manual E2. Automatic F. Rotational F1. Coaxial cylinder F2. Cone and plate G. Piston type
Operating Pressures, Temperatures, Ranges, and Inaccuracies:	See Table 8.63a
Materials of Construction:	A, B1, B2. Glass B3, B4. Hardened stainless steel C. Aluminum, brass, stainless steel D. Glass and corrosion-resistant alloys E. Wetted parts are quartz, borosilicate; needles are glass F. Stainless steel, nickel-plated brass, plastic, ceramic, platinum G. Stainless steel and Teflon®
Costs:	A. $100 to $250 B1. $75 to $300 for capillary tubes; $500 to $3000 for thermostatic baths B2. $5000 to $8000 B3. $1500 to $3000 B4. $5000 to $15,000; computerized processability tester, $70,000 C1, C2, C3. $50 to $300 for cup; $250 for calibration; $500 to $1500 for thermostatic bath C4. $2000 and up D1. $200 to $1000 D2. $21,000 for research unit used in petroleum industry E1. From $100 to $250 for hand tubes to $4000 for units operated with stopwatch; $10,000 for automatically operated viscometer with computer interface F1. Benchtop or battery-operated units (1 to 2% of full scale), $1750; more automated and more accurate units, from $2000 to $10,000; tapered bearing

© 2003 by Béla Lipták

simulator viscometer, $17,000; digital, computer-compatible, torque transducer with multiple displays, $25,000
R&D high-shear viscometers, from $25,000 to $35,000; high-pressure testing stations with digital temperature control, $40,000

F2. Laboratory units with temperature controls, from $3000 to $5000; portable, self-calibrating units, $7000; Mooney viscometer per ASTM and ISO, $35,000; rubber process analyzer, $85,000

G. Sensor with explosion-proof transmitter, $7000, standard units from $4500

Analytical Instrumentation, Partial List of Suppliers:

Bohlin Rheology (F2) (www.bohlinusa.com)
C. W. Brabender Instruments Inc. (F1, F2) (www.cwbrabender.com)
Brinkman Instruments Inc. (www.brinkman.com)
Brookfield Engineering Laboratories Inc. (F1, F2) (www.brookfieldengineering.com)
Cambridge Applied Systems Inc. (G) (www.cambridge-applied.com)
Cannon Instruments Inc. (B1, B2, F1, F2) (www.cannoninstrument.com)
Cargille Laboratories Inc. (A) (www.cargille.com)
Cole-Parmer Instrument Co. (B2, C3, D1, E1, E2, F1, G) (www.coleparmer.com)
Haake (www.haake.de)
Hewlett-Packard Co. (B1, B2) (www.hp.com)
Kaltec Scientific Inc. (F1) (www.kaltecsci.com)
Norcross Corp. (C) (www.viscosity.com)
OFI Testing Equipment (www.ofite.com)
Optra Inc. (www.optra.com)
Paar Physica (www.paarphysica.com)
Precision Scientific Inc. (A, B1, B2, C) (www.precisionsci.com)
Ravenfield Designs (B) (www.ravenfield.com)
Ruska Instrument Co. (D2) (www.ruska.com)
Schott Corp. (B) (www.us.schott.com)
Sunshine Instruments (F) (www.measurebetter.com)
Techne Inc. (B3, B4) (www.techneusa.com)
Theta Industries Inc. (www.theta-us.com/)

INTRODUCTION

The distinction between laboratory and industrial viscosity analyzers is not a sharp one. In this handbook, most of the in-line, automatic viscometers are discussed in the Section 8.64, which covers industrial viscometers, whereas most units that are of portable or benchtop design are considered to be of the laboratory type and are discussed in this section.

A number of designs (capillary, rotational, cone and plate, piston) are available for both laboratory and in-line applications and therefore are included in both sections. An orientation table providing a summary of the features and capabilities of laboratory viscometers is given in Table 8.63a.

The viscosity ranges in this section are given in centipoise (cP) or in centistoke (cSt) units. For conversions among them and other units, refer to Table 8.62d, Table 8.62e, and Tables A.2p, A.2q, and A.2r in Appendix A.2.

LABORATORY VISCOMETER DESIGNS

In this section, the designs of laboratory viscometers are discussed in alphabetical order, starting with the bubble-time, capillary, efflux-cup, falling-ball, falling-needle, and oscillating-piston types, and concluding with the rotational designs. The sonic and ultrasonic detectors are not covered here, because they are most often used in sludge and slurry density applications, which are discussed in Section 6.7.

Bubble-Time Viscometers

In a bubble-time viscometer, a liquid streams downward in the annular zone between the glass wall of a sealed tube and the perimeter of a rising air bubble. The bubble-time viscometer is used to determine kinematic viscosity of transparent liquids, in the units of bubble seconds or approximate stokes, either by timing or by comparison.

When using the comparison method, the laboratory technician determines the viscosity of a fluid by comparing the speed of bubble rise in a tube having the same dimensions as the standard tube, which is filled with a fluid of known viscosity. A set of 36 standard tubes is available, covering a viscosity range from 22 to 100,000 cSt, in uniform, logarithmically even increments of about 26%. The viscosity of the fluid under test is assumed to be equal to the viscosity of that fluid in the standard tube that had the nearest bubble speed.

Another type, rather than requiring sets of standard tubes, consists of only one standard tube, and it determines the viscosity of the fluid by reading a precalibrated scale in

© 2003 by Béla Lipták

TABLE 8.63a

Orientation Table for Laboratory Viscometers

Type of Design / Features		Provides Continuous Signal	In-Line Device	Laboratory Device	Local Readout	Remote Readout Trans.	Temp. Compensation	Fluids: Gas	Fluids: Newtonian	Fluids: Non-Newtonian	Maximum Design Pressure, PSIG (1.0 Bar = 14.1 PSI)	Maximum design Temperature, °F [°C = (°F – 32)/1.8]	Inaccuracy (±%) (1) Based on Full Scale (2) Based on Measurement	Minimum Sample Size or Flow Rate
Bubble time	Manual			✓	✓				✓		ATM.	77	2–10(2)	13 CC
Capillary tube	Manual timing			✓	✓				✓		ATM.	300	0.35(2)	20 CC
	Auto timing		✓	✓	✓	✓			✓		ATM.	300	0.01(2)	20 CC
Capillary extrusion	Influx			✓	✓				✓	✓	100	300	2.0(2)	0.7 CC
	Efflux			✓	✓	✓			✓	✓	5,000	640	2.0(2)	30 CC
Efflux cup	Saybolt			✓	✓				✓		ATM.	250	0.1(2)	60 CC
	Ford cup		✓	✓	✓	✓			✓	✓	ATM.	80	2.0(2)	150 CC
	Zahn cup			✓	✓				✓		ATM.	80	2.0(2)	44 CC
	Auto timing			✓	✓				✓		ATM.	80	5.0(2)	—
Falling ball	Manual			✓	✓			✓	✓		ATM.	300	0.1 – 1(2)	30 CC
	Automatic		✓	✓	✓				✓	✓	15,000	350	0.1 – 1(2)	70 CC
Falling needle	Manual			✓	✓				✓	✓	ATM.	400	0.5 – 1(2)	2 – 10 CC
	Automatic			✓	✓	✓	✓		✓	✓	ATM.	400	0.5 – 1(2)	2 – 10 CC
Rotational	Coaxial-cylinder			✓	✓	✓			✓	✓	ATM. — 20,000	80–500	1.0(2)–2.0(1)	1–500 CC
	Cone and plate			✓	✓	✓			✓	✓	ATM.	750	0.5(2)	0.1 CC
Piston	Travel time	✓	✓	✓	✓	✓	✓		✓	✓	10,000	600	2(2)	In-line

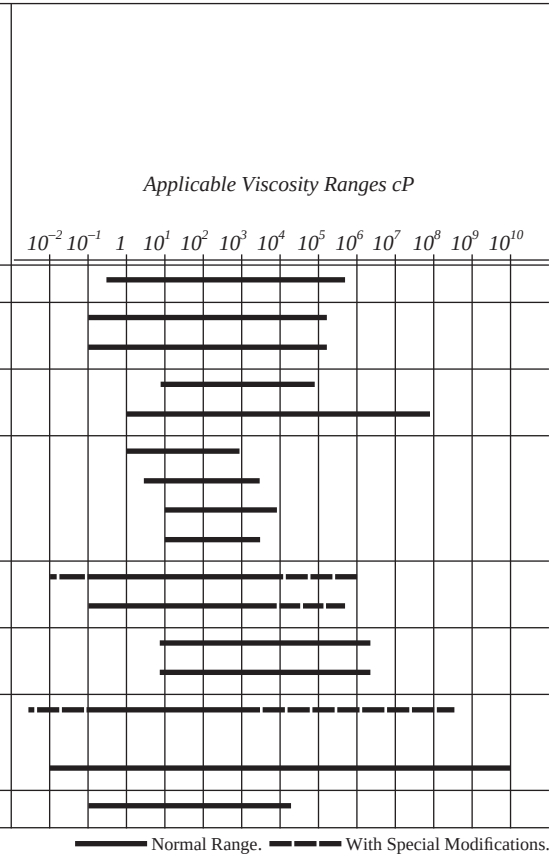

© 2003 by Béla Lipták

Saybolt seconds. The distance the bubble travels during a fixed time period is related by the scale to viscosity.

The direct timing of the bubble is based on the observation that the nominal viscosity (in stokes) of the liquid in the bubble tube (10.65 ± 0.025 mm inside diameter) is numerically equal to the time (in seconds) required for the bubble to travel a distance of 73 mm.

Accuracy and Limitations Because of the influence of specific gravity, surface tension, and thixotropy, the accuracy of this detector is low and depends on the scale range being used. For best results, when the timing method is used to obtain kinematic viscosity, precautions must be taken to ensure that the glass tube is completely vertical, that it has a standard bore, and that good temperature control is provided. A tube tipped by only one radius off the vertical axis will give an error of approximately 10% in the time of bubble travel. A temperature variation of only 1°F (0.6°C) will cause a 5% variation in the timed bubble travel.

Care should be exercised to ensure that the bubbles are of uniform size. For low-viscosity liquids with a bubble speed below 5 sec, it is advised to make comparisons against predetermined standard values.

One advantage of this type of viscometer is that it requires no calibration or recalibration. The bubble-time viscometer is well suited for applications where evaporation losses must be avoided. It is not suitable for liquids containing crystal, fiber, or gel particles. Because of its simplicity and low cost, this method of measurement is suited for routine industrial use by operators without special training.

Capillary Viscometers

This manual viscometer consists of a sample reservoir and a capillary tube. As shown in Figure 8.63b, the hydrostatic head of the fluid causes the sample liquid to flow through the capillary. A clock for measuring the efflux time of the fixed liquid volume and a thermostatic bath with temperature controls completes the apparatus.

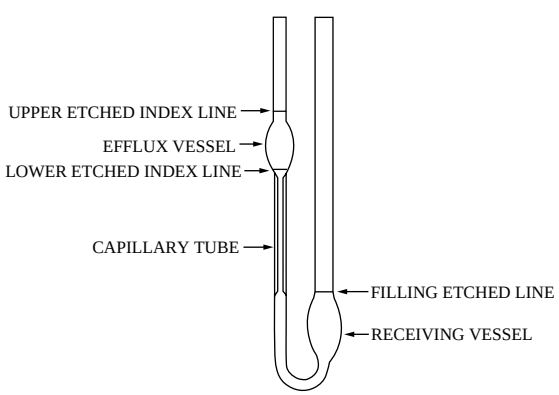

FIG. 8.63b
Ostwald manual capillary viscometer.

The Hagan–Poiseuille equation, which governs viscous flow, has been described in connection with Equation 8.62(3).

Using the Ostwald Viscometer The simplest capillary viscometer, the Ostwald viscometer, is illustrated in Figure 8.62b. The method of measuring kinematic viscosity is detailed in the ASTM D-445 bulletin. In practice, a sample liquid of fixed volume is charged to the lower receiving vessel, and the viscometer is placed in a thermostatic bath. After time is allowed for the sample liquid to reach thermal equilibrium (about 5 min), the sample is drawn up into the efflux vessel by suction until the level is above the upper etched index line.

The fluid is then permitted to flow down through the capillary by releasing the suction. The laboratory technician starts a stopwatch when the fluid surface passes the upper etched index line. The watch is stopped when the surface passes the lower etched index line of the efflux vessel. This efflux time (t) is multiplied by the viscometer calibration constant to obtain the kinematic viscosity of the sample fluid.

Accuracy and Limitations Because of the small driving force provided by the hydrostatic head of the fluid, and because of the change in hydrostatic head with time, the suitability of capillary-tube viscometer is restricted to low-viscosity newtonian fluids. On the other hand, it is a simple, accurate, and convenient detector for the kinematic viscosity range of 0.2 to 120,000 cSt.

If the ASTM test procedure is followed carefully, a repeatability of ±0.10% and a precision of about ±0.35% of reading may be achieved. To achieve this type of accuracy and repeatability, (1) the constant-temperature bath should be maintained with a uniformity of ±0.02°F (0.01°C), (2) efflux times of 100 to 700 sec are required, and (3) precise calibration should be performed at the same temperature at which the device will operate.

In addition to measuring kinematic viscosity, capillary-tube viscometers are used for intrinsic viscosity determinations, for molecular weight measurements (see Section 8.35), and for the study of molecular shapes of natural and synthetic polymers.

Because the Ostwald viscometer is operated under vented (atmospheric) conditions, and because the time lag between taking the sample and making the measurement is large, it should not be used on samples that evaporate or deteriorate when exposed to atmospheric humidity. This type of viscometer is recommended for use under static and stable conditions. Also, the sample liquid should be filtered before making the measurement, to prevent clogging of the capillary tube by solids.

The capillary-tube-type viscometer, if the temperature of the thermostatic bath is well controlled, is capable of very accurate measurements, is inexpensive and easy to operate, and needs little or no maintenance aside from cleaning.

Calibration Before making kinematic or absolute viscosity measurements, the capillary-tube viscometer must be calibrated. This is done by measuring the efflux time using calibrating liquids whose viscosity and density are known.

© 2003 by Béla Lipták

TABLE 8.63c
Approximate Viscosity of ASTM Viscosity Standard in Centistokes

ASTM Viscosity Standard	Approximate Kinematic Viscosity in Centistokes,* at							
	–65°F**	–40°F	68°F	77°F	86°F	100°F	122°F	210°F
S-3	300	80	4.6	4.0	—	3.0	—	1.2
S-6	—	—	10	9.0	—	6.0	—	1.8
S-20	—	—	44	35	—	20	—	3.9
S-60	—	—	160	120	—	60	—	7.7
S-200	—	—	700	480	—	200	—	16
S-600	—	—	2500	1600	—	600	280	32
S-2000	—	—	9000	5700	—	2000	—	76
S-8000	—	—	38,000	22,000	—	8000	—	—
S-30,000	—	—	—	—	50,000	27,000	11,000	—

*1 centistoke = 10^{-6} m^2/s

** $°C = \frac{°F - 32}{1.8}$

TABLE 8.63d
Approximate Viscosity of ASTM Viscosity Standards in Centipoise

ASTM Viscosity Standard	Approximate Viscosity in Centipoise, * at					
	65°F**	77°F	86°F	100°F	122°F	210°F
S-3	3.8	3.3	—	2.5	—	0.9
S-6	8.6	7.7	—	5.1	—	1.5
S-20	38	30	—	17	—	3.2
S-60	140	100	—	51	—	6.3
S-200	620	430	—	180	—	14
S-600	2200	1400	—	530	250	32
S-2000	7900	5000	—	1700	—	63
S-8000	34,000	19,000	—	7000	—	—
S-30,000	—	—	46,000	24,000	9500	—

*1 Centipoise = 10^{-3} Pa·s

** $°C = \frac{°F - 32}{1.8}$

The liquids used for calibration include water and a number of standard ASTM calibrating liquids described in Tables 8.63c, 8.63d, and 8.63e. The calibration constant is graphically determined using the following equation:

$$\frac{\mu}{\rho t} = A - \frac{m\beta}{t^2} \qquad \textbf{8.63(1)}$$

where

μ = absolute viscosity, poise
ρ = density of liquid, g/cm^2
t = efflux time, sec
A = viscometer constant
m = kinetic energy coefficient
β = kinetic energy constant

TABLE 8.63e
Approximate Viscosity of ASTM Viscosity Standards in Saybolt Universal Seconds

ASTM Viscosity Standard	Approximate Viscosity in SUS, at	
	100°F*	210°F
S-3	36	—
S-6	46	—
S-20	100	—
S-60	290	—
S-200	930	—
S-600	—	150

* $°C = \frac{°F - 32}{1.8}$

© 2003 by Béla Lipták

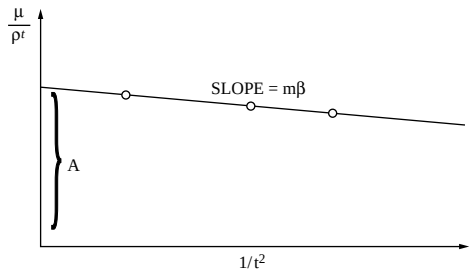

FIG. 8.63f
Calibration of capillary-tube viscometers.

By plotting $\mu/\rho t$ vs. $1/t^2$ for several known viscosities and connecting the points by a straight line, the value of $m\beta$ is obtained from the negative slope of the line, and the value of A is obtained from the intercept of the line with the ordinate (Figure 8.63f).

With viscometer factors A and $m\beta$ known, efflux time measurement can be made to determine the kinematic viscosity on any sample.

$$\upsilon = At - \frac{m\beta}{t} \qquad \textbf{8.63(2)}$$

When the efflux time is very large, the kinetic energy correction ($m\beta/t$) in the viscosity equation will be small and therefore often can be neglected. Once the kinematic viscosity is known, the absolute viscosity is calculated by multiplying the kinematic viscosity by the density of the sample fluid. To obtain accurate viscosity readings, the measurement of liquid density and efflux time are to be made at the same temperature.

Automatic Capillary Viscometer Automatic capillary-tube viscometers provide automatic measurements while using conventional glassware. They consist of a microprocessor-based control package that provides temperature controls, automates the influx and efflux operations, performs the measurement of the efflux time, and generates automatic data display or printout.

Precise results within ±0.01% inaccuracy and ±0.007% repeatability may be obtained while the temperature is maintained within ±0.01°F (0.006°C). Automatic influx controls (same level every time) eliminate drainage errors, while the electronic timing unit provides 0.01-sec resolution.

Once the viscometers have been loaded with samples, the controls start the pump and valves to influx the sample into the measuring bulb. Here, a predetermined time (about 3 min) is provided for the sample to reach bath temperature. At the end of this equilibrium period, the discharge of the sample from the efflux vessel is started. When fluid passes the upper photocell detector, the timing counter starts, and it continues until all the fluid passes the lower photocell detector.

The timing counter utilizes a thermostatic crystal-controlled oscillator that displays the readings in centistokes digitally. It is preferred that the photocells be actuated by light refraction rather than changes in the intensity of transmitted light, because this eliminates the effects of sample color variation.

The utility requirements include an external cooling medium, a nitrogen gas supply, a vacuum source (20 in. Hg [68 kPa] or higher), and a 115/230-V ±10%, 50- or 60-Hz electric power supply. The viscometer might contain several capillary tube assemblies to permit continuous operation so that, while one viscometer is in the measurement cycle, the others can be in the cleaning, drying, loading, or prewarming cycle stages.

Because of the detector response time of 10 μsec, minimum meniscus speeds of 1 in./min are required. The constant temperature bath is controlled between 40 to 275°F (4.4 to 135°C).

Highly viscous liquids and staining liquids cannot be tested if they tend to cling to or stain the capillary tubes. Because of the high accuracy obtainable, this viscometer is well suited for research work, even though it is more expensive than others. This automatic capillary-tube viscometer can be converted for use as a process viscometer by providing an automatic sampling system with adjustable influx pressure regulation. Because such a viscometer will give only intermittent viscosity measurements, it is not suitable for monitoring processes that can experience rapid changes.

Intrinsic Viscosity and Molecular Weight Intrinsic viscosity (also called *limiting viscosity number*, or *LVN*) measurement is useful for determining the molecular weight and/or the shape of polymer molecules in a solution. The intrinsic viscosity of dilute polymer solutions can be detected by efflux time measurements if the polymer solution is dilute enough to allow the sample to have newtonian characteristics. The steps in the measurement are as follows. First, a value for the viscosity ratio (μ_r = relative viscosity) is calculated.

$$\mu_r = \frac{t}{t_0} \qquad \textbf{8.63(3)}$$

where

t = efflux time of the solution
t_0 = efflux time of the solvent

After this step, the specific viscosity (μ_{sp}) is derived as follows:

$$\mu_{sp} = \mu_r - 1 \qquad \textbf{8.63(4)}$$

Then, intrinsic viscosity [μ_I] is calculated using either one of the following formulas:

$$[\mu_I] = \left(\frac{\mu_{sp}}{C}\right)_{C\to O} \qquad \textbf{8.63(5)}$$

$$[\mu_I] = \left(\frac{\log_e \mu_r}{C}\right)_{C\to O} \qquad \textbf{8.63(6)}$$

© 2003 by Béla Lipták

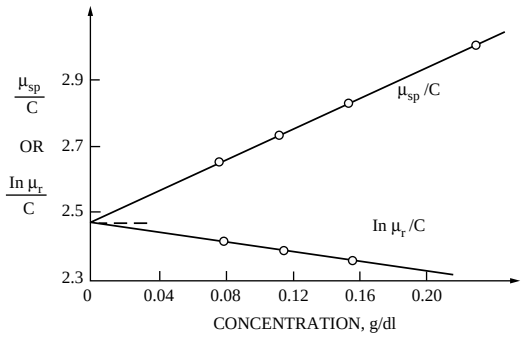

FIG. 8.63g
Intrinsic viscosity determination from specific or relative viscosity.

where
C = concentration

Either or both of the bracketed quantities can be plotted against concentration and can be extrapolated to infinite dilution to obtain a reading of intrinsic viscosity as illustrated in Figure 8.63g.

Mark–Houwink Equation The Mark-Houwink equation expresses the relationship between intrinsic viscosity and molecular weight.

$$[\mu_I] = KM_w^a \qquad \textbf{8.63(7)}$$

or, in logarithmic form,

$$\log [\mu_I] = \log K + a \log M_w \qquad \textbf{8.63(8)}$$

where
M_w = molecular weight
K and a = constants for a given polymer-solvent system

Efflux time measurements are made of well fractionated or monodisperse systems, and intrinsic viscosity readings $[\mu_I]$ are calculated. The molecular weight (M_w) is measured osmotically or by light scattering, and the values of $[\mu_I]$ are plotted against M_w on log-log paper as shown in Figure 8.63h. From this plot, the value of "a" is calculated as the slope, and the value of K is determined from the slope "a" and from a single point on the line.

The intrinsic viscosity of polydisperse systems can be determined on the basis of molecular weight using the following relationship:

$$[\mu] = K\overline{M}_w^a \qquad \textbf{8.63(9)}$$

where
$\overline{M}_w$ = viscosity average molecular weight

Once K and a have been determined on the basis of measurement of a monodispersed sample, $\overline{M}_w$ can be calculated easily from Equation 8.63(9).

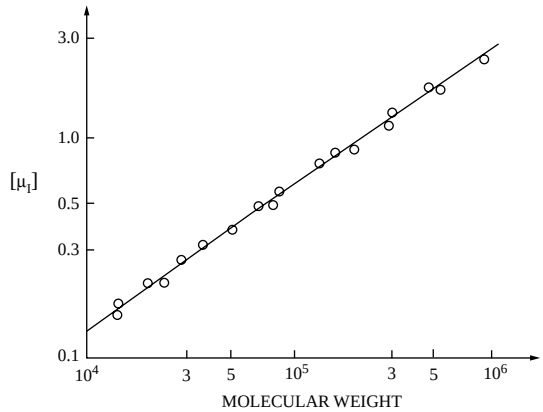

FIG. 8.63h
Molecular weight determination from intrinsic viscosity.

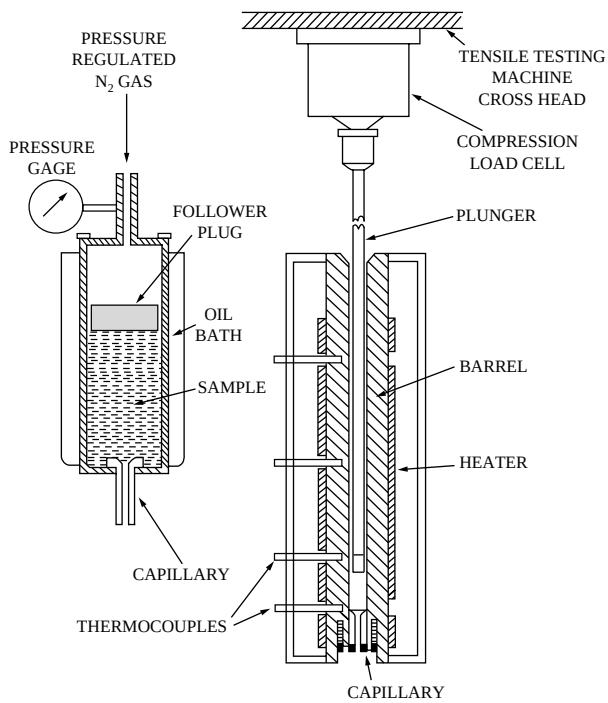

FIG. 8.63i
Schematic diagram of capillary-extrusion viscometer.

Capillary-Extrusion Viscometer The use of capillary-tube viscometers is limited to the measurements of low-viscosity newtonian fluids because of the small driving force available to initiate the liquid flow and because of the inability to vary the shear stress and shear rates during the measurement. As discussed in Section 8.62, the viscosity of non-Newtonian fluids depends on shear rate. Consequently, a number of manufacturers have designed capillary-extrusion viscometers for monitoring non-Newtonian high-viscosity fluids.

The design described in Figure 8.63i utilizes compressed nitrogen gas from a commercial cylinder to drive the sample through a capillary. The process sample is charged to a thermostatically controlled steel reservoir, and a free-floating follower plug rides on top of the sample to distribute the pressure

© 2003 by Béla Lipták

evenly over the surface. A series of extrusions may be made through an orifice at varying pressures. The rate of flow, in cubic centimeters per second, is calculated from the weight of the extruded sample and from the elapsed time during each extrusion. The driving force for the extrusion is measured by a pressure gauge. From these readings, the viscosity in poise, the rate of shear, and the stress are all calculated.

Design Variations Another type utilizes an automated tensile tester with a constant speed to extrude materials through a capillary. A sample is placed in a thermostatically controlled extrusion chamber, and a piston is attached to the moving cross head to force the material through a capillary at a fixed rate. The force required to drive the piston is detected as the compression of load cell attached to the cross head. The load cell signal is recorded on a strip chart recorder.

The rate of flow can be determined by the piston speed or by measuring the weight of the extruded material and the elapsed time of the test. The piston speed can be changed easily, and a series of tests can be performed at different shear rates on the same sample. The recorded load history makes it possible to study dilatant, thixotropic, or other non-Newtonian materials. The flow properties (viscosity, shear stress, and shear rate) are calculated from the measured data and from the constants of the viscometer geometry.

Still another type of viscometer measures the influx time of the material through a capillary. The liquid sample is forced through an open-ended capillary by a constant air pressure, which is generated by a vibrating vertical piston. The influx time (in poise) of the sample liquid to travel a marked distance along the capillary tube is measured as viscosity.

For these viscometers, a variety of capillary lengths and diameters are available. The capillary-extrusion viscometer can serve to characterize non-Newtonian fluids having viscosities up to 10^8 cP (10^5 Pa·s) and over a shear rate range of 1 to 10^4 sec^{-1}. The inaccuracy of these measurements is within ±2% of reading. These viscometers are valuable for the study of materials that are processed in injection molding operations, because the tests themselves are carried out under closely simulated processing conditions.

Limitations The following factors may influence the accuracy of the measurements obtained by using capillary-extrusion viscometers:

1. Nonuniformity of sample shear rate
2. Entrance effects—energy losses at the capillary entrance and discharge points
3. Compressibility of fluids
4. Pressure loss produced by the flow in the sample chamber
5. Temperature gradient created by shear-induced heat

The above factors can result in errors, because they conflict with the assumptions that were made in defining Equation 8.63(4) for newtonian fluid behavior in a capillary tube. When performing scientific research, great care should be taken to correct for these errors. If that is done, the capillary-extrusion viscometers have excellent reproducibility and are well suited for routine industrial and scientific work.

Efflux-Cup Viscometers

Efflux-cup viscometers are most commonly used for field work to measure the viscosity of oils, syrups, varnish, lacquer, paints, and bitumen emulsions, although they have some inherent inaccuracies. The testing procedure is quite similar to that of the capillary-tube viscometers. Here, too, efflux time through fixed orifice at the bottom of a cup of a specified volume of fluid is measured as an indication of the viscosity of the fluid.

Because the viscosities of newtonian liquids are independent of the dimensions of the viscometers used, it is possible to convert efflux times to kinematic viscosities by the use of conversion charts or by formulas such as Equation 8.62(3). To obtain high accuracy in an efflux-cup viscometer, the liquid-holding vessel and orifice are both immersed in a thermostatically controlled temperature-control bath. There are 40 or more design variations of these viscometers, some of which are described in the following paragraphs.

Saybolt Viscometer This viscometer is the standard for testing petroleum products. The standard method of testing for Saybolt viscosity is described in ASTM D88–56. The thermostatic baths have a temperature control uniformity of better than ±1°F (±0.6°C) over a range of 70 to 230°F (21 to 110°C). For accurate viscosity measurements, the laboratory room should be free from drafts and sudden changes in temperature. Accuracies within ±0.1% of reading can be obtained when the standard test procedures are followed.

Each orifice and cup assembly should be calibrated using the ASTM viscosity standards described in Table 8.63e to obtain the correct calibration constant. Three types of orifices are available: for universal, furol, and asphalt applications. Respectively, the furol and asphalt orifices have an efflux time of approximately one-tenth and one-hundredth that of the universal orifice. The cup-orifice combination should always be selected to provide an efflux time within the range of 20 to 100 sec.

Of these three types of efflux cups, the universal orifice (Saybolt universal viscometer) is the most commonly used, and its efflux time is designated as Saybolt universal seconds (SUS). For conversions between SUS and other viscosity units, refer to Table 8.62d. The Saybolt universal viscometer, as shown in Figure 8.63j, measures the time required for 60 cc of sample fluid to flow out through an orifice having the dimensions of 0.176 cm in diameter and 1.225 cm in length. Saybolt universal seconds (t) can be converted to kinematic viscosity (υ) by the following equations:

$$\text{when } t < 100 \text{ sec}, \upsilon = 0.226\,t - 195/t \text{ centistokes} \qquad \textbf{8.63(10)}$$

$$\text{when } t > 100 \text{ sec}, \upsilon = 0.220\,t - 135/t \text{ centistokes} \qquad \textbf{8.63(11)}$$

© 2003 by Béla Lipták

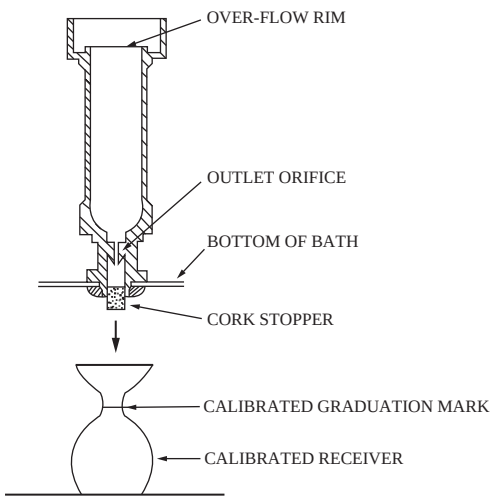

FIG. 8.63j
Saybolt viscometer.

TABLE 8.63k
Conversion of Ford Cup Seconds

Cup Number	*Orifice Diameter*	*Conversion Equation*
2	0.0995 inch*	$\upsilon = 0.013t - 10/t$
3	0.134"	$\upsilon = 0.023t - 8/t$
4	0.162"	$\upsilon = 0.037t - 4/t$

υ = kinematic viscosity, stokes
t = efflux time, seconds
*1 inch = 25 mm.

Ford Cups Ford-cup viscometers are used for the measurement of low-viscosity liquids that do not deviate much from the ideal (newtonian) liquid behavior. ASTM D-1200–58 standard method defines the procedure for determining the viscosity of paints, varnishes, lacquers, and related liquid materials using the Ford-cup viscometers. Ford cups are provided with a conical bottom fitted with a standardized orifice. The measurement results are expressed as efflux time, in seconds, and they measure the time it takes for the liquid to flow through the orifice until the first break occurs in the stream. Efflux time may be converted to kinematic viscosity by the use of the equations provided in Table 8.63k.

The particular cup-and-orifice combination should be so selected as to provide an efflux time within the range of 20 to 100 sec. The test should be performed at a controlled temperature of 77°F (25°C), and the temperature drift during the test should not exceed 0.5°F (0.28°C) as determined by a thermometer in the efflux stream. A wide range of construction materials are available for the test components, but the body usually is made of aluminum, and the orifices are made of brass. The cups and orifices are interchangeable, but the whole assembly must be calibrated each time the orifice is changed. The Ford cups should be recalibrated on a regular schedule to correct for the errors caused by orifice enlargement due to cleaning of material deposits in the orifice.

Ford viscosity cups no. 2, 3, and 4 are normally used for viscosity ranges of 10 to 100 cSt (10^{-5} to 10^{-3} m^2/s). Their inaccuracies are ±2.0% of reading.

Zahn Cups The Zahn-cup viscometer is widely used by paint manufacturers to standardize their products during the manufacturing stages. It is also utilized for measuring the viscosity of many coatings, such as varnishes and lacquers, because of its convenience and speed. It is essentially a bullet-shaped container having a definite volume (44 cc) and an orifice in the bottom. To ensure that it is properly leveled, it is suspended from a ring and ball.

Zahn-seconds represent the efflux time required for the 44 cc volume of liquid to flow through the orifice. The test is made by filling the stainless steel cup with the sample liquid and then measuring the time period during which a steady stream is flowing through the bottom opening of the cup. The measurement is stopped when the cup first begins to drip. For best results, liquids should flow through the calibrated orifice in the bottom of the cup in approximately 20 to 40 sec. Repeatability of ±2% of actual readings can be obtained.

Table 8.63l lists the five different orifice sizes that are available. There is no general formula to convert Zahn-seconds to other viscosity units. As a result, Zahn-cup viscometers are used only for regulating the thickness of coatings and as a guide for coating quality determination.

Automatic Efflux Cup The automatic efflux-cup viscometer is essentially an automated Zahn-cup viscometer that is operated on line, with the steps of filling, efflux timing, and solvent washing operations being controlled by a cycle-time programmer (Figure 8.63m). The programmer allows the liquid to enter the cup until the overflow detector actuates. Drainage of fluid from the bottom of the cup and from the overflow is sensed by deflection of torsion wire-mounted vanes, which operate sensitive switches that control the efflux timer.

The automatic efflux-cup viscometer is a low-cost on-line viscometer. It is recommended for applications in which accuracy is not critical and intermittent measurements with substantial time lags between measurements can be tolerated.

TABLE 8.63l
Conversion of Zahn Seconds

Cup Size	*Range in Zahn Seconds*	*Range in Relative Centipoise**	*Range in Centistokes*
1	40–85	20–85	15–78
2	20–70	30–170	40–380
3	25–60	170–550	90–604
4	20–65	200–900	136–899
5	15–60	250–1200	251–1627

*1 centipoise = 10^{-3} Pa·s

© 2003 by Béla Lipták

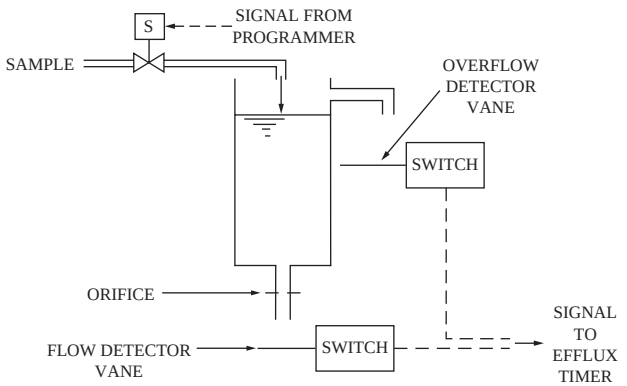

FIG. 8.63m
Automatic efflux-cup viscometer.

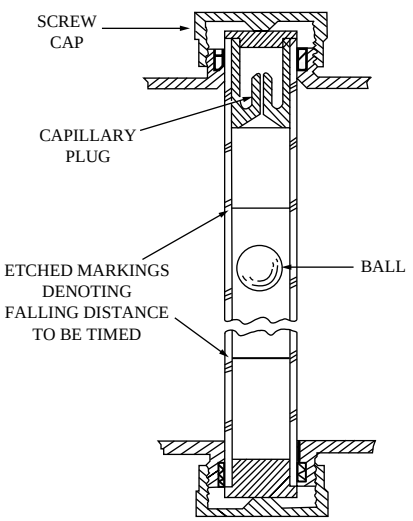

FIG. 8.63n
Falling-ball viscometer.

Falling-Ball Viscometers

This viscometer operates on the falling-ball principle described by Stokes in 1851 and is based on his investigations on spheres falling through liquids [Equation 8.62(1)]. Stokes' law relates the viscosity of gases and liquids to the steady-state velocity of a known-weight sphere falling through a fluid of known density at very low Reynolds numbers.

Manual Falling-Ball Unit The falling-ball viscometer consists of a precision-bore glass tube and calibrated glass or special steel balls of optical precision, as shown in Figure 8.63n. The tube has a length of about 200 mm and a bore of about 16 mm, and it is mounted in a glass water jacket that is held at a specified angle to the vertical.

A special capillary plug provides a positive seal and prevents introduction of air into the column during the tube-inversion process. This permits as many readings to be taken as are desired, using a single sample, when measurements need to be double-checked or when the goal is to determine the rate of variation of viscosity with temperature. The closed system allows operation without the effects of skin formation, surface tension, evaporation, and other losses of material.

Making the Measurement The measurement is made by detecting the time it takes for the ball to fall through an accurately calibrated distance, determined by two marks on the glass tube. The absolute viscosity of the fluid can be found by multiplying that time interval by a factor that reflects the effects of temperature, specific gravity of the fluid, and the characteristics of the ball used, in accordance with the following formula:

$$\mu = t \times (\rho_{SB} - \rho_{SF}) \times B \qquad \textbf{8.63(12)}$$

where

μ = absolute viscosity, centipoise
t = time interval of the falling ball, sec
ρ_{SB} = specific gravity of the ball
ρ_{SF} = specific gravity of the fluid at the measuring temperature
B = ball constant

The use of several calibrated balls of different sizes in the same glass tube covers the viscosity ranges from 0.01 to 1,000,000 cP. This range covers from various gases (hydrogen, air, carbon dioxide, etc.) to such viscous liquids as will hardly pour through a 16-mm opening. If the temperature of the liquids in the glass jacket is precisely maintained at 68°F (20°C), for the usual range of viscosities (10 to 600 cP [0.01 to 0.6 Pa·s]), viscosity can be determined within an inaccuracy of ±0.1% if the time interval is measured by a stopwatch of 0.02 sec inaccuracy. Outside this viscosity range, a ±0.5% inaccuracy can be expected.

To obtain this level of accuracy, accurate knowledge of liquid density and accurate correction for ball density both become very critical. When using metallic balls, the density of the sample liquid should be known within 0.02 specific gravity (SG). In case of glass balls, the process sample density should be known within 0.005 SG. The variation of ball density with temperature is usually too small to have a measurable effect on the ball constants. However, for extremely high-accuracy measurements, a correction factor should be used as recommended by the manufacturer.

The viscosity of gases at 68°F (20°C) can be calculated from the following relationship:

$$\mu = \frac{\text{period of fall in gas}}{\text{period of fall in air}} \times 0.01836 \qquad \textbf{8.63(13)}$$

A high degree of cleanliness is essential when measuring the viscosity of gases, because the clearances between the tube and ball are very minute.

© 2003 by Béla Lipták

Calibration and Error Sources It is always good practice to calibrate the instrument with great care and as often as possible. The ball constant can be determined by rearranging Equation 8.59(12) as follows:

$$B = \frac{\mu}{(\rho_{SB} - \rho_{SF})t} \qquad \textbf{8.63(14)}$$

Water at 68°F or ASTM calibrating liquids may be used. The instrument should be carefully cleaned, and the temperature should be held constant within ±0.02°F (±0.01°C).

Care should be taken to minimize subjective errors. A stopwatch of insufficient accuracy is often the cause of error. Lack of attention to temperature is another potential error source, because viscosity at room temperature may vary from 2.5 to 16% for each degree change in temperature, depending on the type of liquid to be tested. Controlling temperature within hundredths of a degree at low temperatures, and within tenths above 100°F (38°C), is absolutely essential for accurate results.

Other possible sources of error are vibration during the time of the fall, inaccurate leveling of the viscometer, foreign matter or gas bubbles in the sample liquid, thermometer errors, and internal heating of the liquid by absorption of infrared radiation from direct sunlight or other sources.

The advantages of this viscometer include its operational simplicity, high speed, and the virtual elimination of subjective variables. It is well suited for routine industrial use as well as for precise scientific measurements of gases and newtonian liquids, including dark or opaque colored fluids as long as they are free from crystal and gel particles.

Automatic Falling-Ball Viscometer These viscometers are provided with automatic controls and timers to measure viscosities of 0.1 cP or higher, with a repeatability of 0.1%. Approximately 70 cc of sample is required to charge this viscometer, which can operate at pressures as high as 15,000 PSIG (103 MPa) and at temperatures as high as 350°F (177°C).

The viscometer consists of two units: the viscosity test assembly (equipped with a precision bore tube, heating and temperature control components, and the ball position detector) and the auxiliary control unit. The auxiliary control unit contains the temperature controller, an electrical timer with reset, and the electrical circuits. The viscosity test chamber, which is mounted on a trunnion, can be rotated to various angular positions. The electrical timer is activated by the ball release signal and, when the ball closes the contact at the lower end of the tube, the timer stops. The timer is accurate to within 0.001 min. The fall time of the ball is proportional to the sample's viscosity, and the readings are interpreted by calibration curves.

The automatic falling-ball viscometer is simple and safe to operate, and it can measure fluid viscosity under simulated process conditions. High accuracy (±0.1%) is obtained by judicious selection of the proper calibrated ball size and by adjusting the angular position of the precision bore tube.

Falling-Needle Viscometer

The replacement of falling balls with falling needles reduces wall correction effects and results in a more stable falling motion. The needles are made of glass, and they are 4 in. (100 mm) in length and 0.065 in. (1.6 mm) in diameter. They fall inside an 0.75-in. (19-mm) ID inner tube. Needles are available in seven specific gravities relative to water (1.01, 1.1, 1.5, 2.0, 3.0, 5.0, and 8.0 SG). When a manual viscometer is used, the measurement is made by establishing the fall time with a stopwatch. In automatic designs, the stopwatch is eliminated.

The velocity of the falling needle is a function of both the difference between the density of the process fluid and that of the needle and of the sample viscosity. The units are also provided with resistance temperature detector thermometers. The automatic falling-needle viscometer is also available with microprocessor control, with a computer interface, and with data-reduction software for printing, plotting, and graphing tasks.

Rotational Viscometers

The rotational viscometer is probably the most widely used rheometer (see also Section 8.53). The operating principle of the rotational viscometers is based on the fact that the torque necessary to overcome the viscous resistance to the induced movement (torque) by the rotation of a spindle is directly proportional to the viscosity of the fluid. In this viscometer, the entire sample is subjected to a uniform (or nearly uniform) rate of shear, so the direct determination of viscosity by measurement of the corresponding shear stress is possible.

The rotational viscometer, if equipped with various spindle sizes and with a variable speed drive, can be used for the measurement of fluid viscosities ranging from 10^{-4} to 10^{8} poise (10^{-5} to 10^{7} Pa·s). The measurement can be performed at a range of shear rates from 10^{-4} to 10^{4} sec^{-1}. The main advantages of this type of viscometer include its ability to perform continuous measurements under varying conditions on the same sample. It can also operate at a given set of boundary conditions for an extended time period.

Rotational viscometers are particularly valuable in the investigation of non-Newtonian fluids. They are classified into coaxial-cylinder types, cone-and-plate types, and plain spindle designs. The cone-and-plate type viscometer is more suitable for the study of non-Newtonian fluids than the coaxial-cylinder type viscometer, and it is also more versatile.

Coaxial-Cylinder Viscometer Figure 8.63o illustrates a coaxial-cylinder viscometer. All these viscometers have three features in common: a mechanical means of driving a spindle at a constant speed, a torque-measuring device, and a means of correlating shear rate (spindle diameter and speed of rotation).

Using weights, one of these viscometer designs measures the force required to rotate a spindle or bob in the sample at a specified speed. The weights are suspended at the free end

© 2003 by Béla Lipták

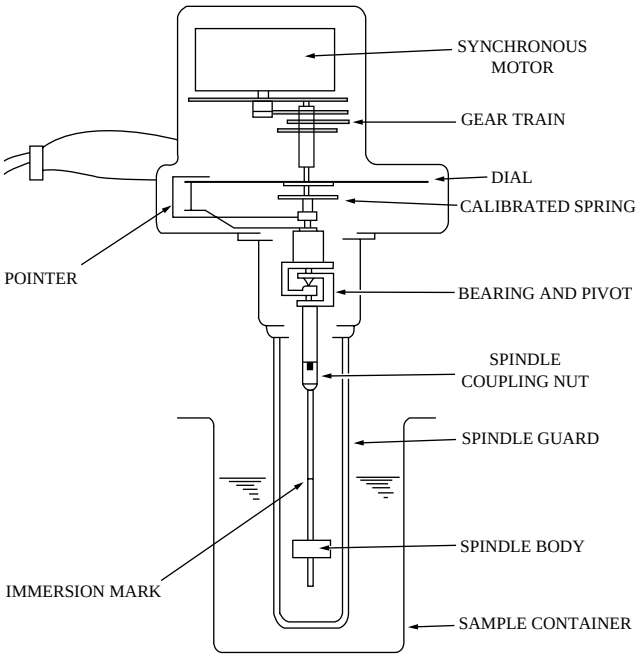

FIG. 8.63o
Rotational viscometer.

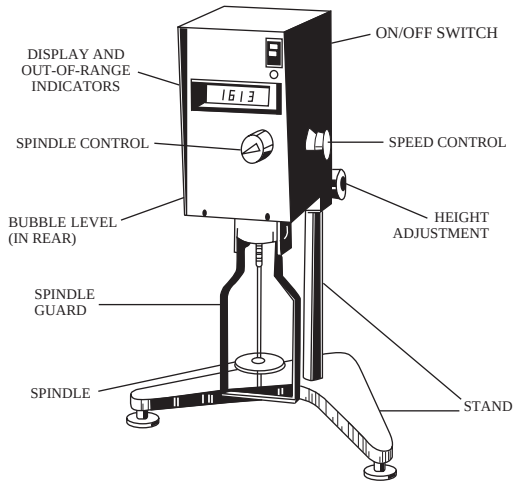

FIG. 8.63p
Rotary viscometer measures the torque required to rotate various spindles when immersed in the test fluid. It can detect viscosities from 10 to 8,000,000 cP with error of 1 to 2% of full scale. (Courtesy of Cole-Parmer Instrument Co.)

of a cable while the other end is wound around a pulley, which is geared to the shaft of the spindle. A standard one-pint friction-top can is used as a container. The weights are a measure of torque, and the shear rate is calculated from the speed of rotation. This unit is inexpensive and is used for viscosity ranges from 0.1 to 5000 poise (0.01 to 500 Pa·s).

Another coaxial viscometer rotates a flat, disc-shaped stirrer at a constant speed in a half-pint size sample container, which is firmly placed on a turntable equipped with torque-measuring capability. A spring is attached to the spindle of the turntable spindle and is used to counteract the torque that is generated by the sample. The angular deflection of the turntable is measured as the viscosity of the sample fluid. This type of viscometer is used for low-viscosity measurements, in the range from 0.1 to 15 poise (0.01 to 1.5 Pa·s).

In another coaxial viscometer design, the sample container is rotated at a constant speed, and the torque required to restrain the freely suspended spindle is measured by detecting the spring-controlled angular deflection of the supporting torque wire. In some cases, the spring movement is converted to a current signal by use of the poles of a magnet, and the current required to restrain the spring is detected as an indication of viscosity. This instrument is good for low- to medium-viscosity fluids and operates at relatively low shear rates.

Still another type coaxial viscometer drives the spindle at a desired rotary speed through a calibrated spring, and the viscosity of the fluid is measured by the degree to which the spring is wound (Figure 8.63p). Constant speed is maintained by a synchronous motor, and speeds of rotation are changed by a gear train (up to eight speeds). The spring torque can be used for remote transmission of measured data.

Perhaps one of the most versatile of the commercially available coaxial-cylinder viscometers is the one whose rotor speed is changed by line frequency manipulation. With this design, the torque on the rotor is measured by means of potentiometer mounted on the spring, by noting the deflection of the torsion spring mounted between the rotor and the drive transmission.

For the latter two viscometer designs, shear diagrams can be plotted automatically on X-Y recorders, displaying shear stress vs. shear rate or shear stress vs. time of shear, because of their ability to change speed of rotation continuously and because of their ability to transmit the measured torque data. Any X-Y recorder can be used if it has sufficient sensitivity. A minimum frequency response of 1 sec is recommended. This type of viscometer is particularly useful to study such non-Newtonian fluid properties as apparent viscosity relationship, dilatancy, thixotropy, rheopexy, yield value, and plasticity.

Electrical components are usually housed in an explosion-proof housing. The spindle extension can also be adapted for hazardous-area applications or designed for remote testing in a case of a very high-temperature environment. A wide variety of cups, bobs (spindles), and other special attachments are available to extend the viscometer's working range. Viscosities can be measured in the range from 5×10^{-3} to 16×10^{7} poise (5×10^{-4} to 16×10^{6} Pa·s) over a six-decade range of shear rates, from 10^{-2} to 10^{4} sec^{-1}. These coaxial-cylinder viscometers are reasonably inexpensive and are well suited for most routine industrial and research work.

Non-Newtonian Fluids In the design of the coaxial-cylinder viscometer, many assumptions were made to give the appearance of newtonian fluid behavior; i.e., steady laminar flow, isothermal flow, no slippage at the wall, constant temperature, viscosity unaffected by shear rate, etc. Thus, the coaxial-cylinder viscometer provides a rapid means of obtaining

© 2003 by Béla Lipták

reproducible absolute viscosity readings of newtonian fluids by subjecting the sample to a shear stress.

Uncertainty does arise when the process sample is non-Newtonian. The fundamental problem is that the very property that we are interested in measuring is affected by the shear applied by the viscometer. Therefore, it is important to accurately define the limits of the shearing conditions that the viscometer can generate. The major sources of errors in coaxial-cylinder-type viscometers when used on non-Newtonian fluids are as follows:

1. The shear stress, shear rate, and (therefore) the viscosity vary across the gap between the sample cup and the bob used to measure the viscosity.
2. The end effect (i.e., the contribution to the torque that arises in the fluid between the end of the bob and the bottom of the cup) is another error source. The end effect can be minimized by specifying the immersion depth, by using bottomless cups, or by trapping air beneath the bob.
3. The stress-induced heat generation within the fluid at high shear rates can also be problematic.

For the above listed reasons, many different geometrical bob and sample holder configurations have been developed (see Figure 8.63q).

Performance When using the coaxial-cylinder type viscometers, several factors may have significant effects on the overall performance. For that reason, the following operating conditions should be specified:

1. Speed of rotation
2. Spindle size and shape
3. Temperature of liquid
4. Size and shape of sample container
5. Depth of liquid from bottom of the container
6. Spindle immersion depth
7. Elapsed time to rotation before reading is taken

The factors and conditions that are undesirable and therefore should be guarded against include the following:

1. Dirt on the torque measuring device
2. Dirty, corroded, pitted, or deformed spindle
3. Off-center placement of the spindle in the container
4. Incorrect electric power frequency
5. Lack of regular recalibration
6. Turbulent flow (low-viscosity fluid with high speed)
7. Large air bubbles in the sample

Therefore, when measuring the viscosity of non-Newtonian fluids, (1) obtain a viscometer that provides the most uniform shear rate throughout the measured sample, and (2) use a consistent experimental procedure.

Cone-and-Plate Viscometer The cone-and-plate viscometer has been designed to eliminate some of the drawbacks of the coaxial-cylinder viscometer and to provide a rapid and reproducible means of monitoring the flow characteristics of non-Newtonian fluids.

The geometric configuration of a cone and a plate provides uniform shear rate and stress throughout the fluid sample at a given angular velocity as a result of the linear increase in both the sample thickness and the tangential velocity as the distance from the center increases. In addition, the influence of shear-induced heat within the fluid at high shear rates is substantially reduced, because the sample is a very thin layer.

As shown in Figure 8.63r, the cone-and-plate viscometer consists of a flat plate and a cone with a very small angle (less than 1°). The apex of the cone almost touches the flat plate surface, and the fluid sample fills the narrow gap between the cone and the plate. Capillary action keeps the sample materials in place during operation.

The Drive A continuously variable-speed motor drives the rotating platen. The rotary speed is precisely maintained by an electronic velocity control servomechanism. In some cone-and-plate viscometer designs, the flat plate is rotated while the conical disc is held by a torsion measuring head; in others, the conical disc is rotated through a dynamometer while the bottom flat plate is stationary. Torsion bar movement can be measured by a differential-transformer type of displacement transducer. The viscous traction on the cone is measured by an electromechanical torque dynamometer (combination of torque spring and potentiometer).

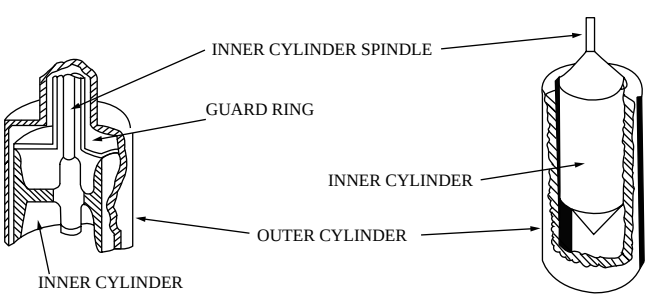

FIG. 8.63q
Coaxial cylinder viscometers.

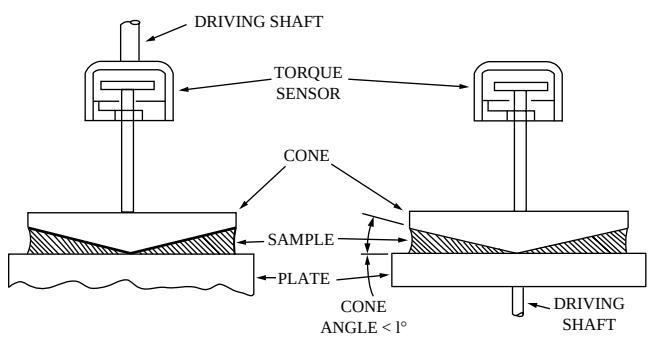

FIG. 8.63r
Cone-and-plate viscometers.

© 2003 by Béla Lipták

For both types, temperature of the sample is measured by thermocouples embedded in the plate, and precise temperature control is maintained. The gap between cone and plate is kept constant by a servo system. The relative position of platen to cone can be detected by a ceramic proximity gauge or by thermal sensors.

By making an appropriate choice of platen diameter and cone angle, and by modifying the drive gearbox ratios, viscosities from 10^{-4} to 10^{8} poise (10^{-5} to 10^{7} Pa·s) can be measured. The shear rates can be adjusted from 10^{-4} to 10^{4} sec^{-1}.

Oscillating Design To determine the dynamic properties of viscoelastic materials, one cone-and-plate viscometer manufacturer has incorporated the use of a sinusoidal motion over a wide frequency range into this sensor. This oscillatory method of testing allows the moduli of elasticity and viscosity to be derived from the ratio of applied strain and resultant stress, and the phase difference between the two can be in an almost undisturbed state. This is important for materials with unstable structure or yield value and those that can be damaged by continuous rotation.

Advantages and Precautions The chief advantage of the commercial cone-and-plate viscometer is its ability to record rheograms automatically for non-Newtonian fluids that exhibit shear-dependent and time-dependent behavior over a wide range of shear stress and rates. The control unit gives uniform acceleration of the platen up to a selected maximum speed at a preselected acceleration rate. On reaching the preset maximum, the platen automatically decelerates to zero at the selected rate. Quick application and termination of strain or hold speed are also possible. Any X-Y recorder can be used as a plotter. An auto-plotter with a pen-lifting device and a minimum frequency response of 1 sec is recommended.

In connection with cone-and-plate viscometers, the following precautions should be observed:

1. Avoid any air bubbles in the sample.
2. Avoid use of excess amount of fluid around the cone periphery to further minimize the edge effect.
3. Avoid testing high-viscosity materials such as polymers, which tend to ball up and leave a gap between the cone and plate unless the processing temperature is high enough to melt the materials and ensure proper contact.

The cone-and-plate viscometer is the most versatile of all currently available designs and is an excellent rheometer. It is capable of measuring not only absolute viscosity of newtonian fluids but also elasticity and all the other flow properties such as dilatancy, thixotropy, yield value, shear stress/shear rate, and apparent viscosity/shear rate. It can make these measurements over wide and precisely controlled ranges of temperatures and shear rates. The main limitation of this type of viscometer is its high cost.

Oscillating Piston Viscometer

The unit illustrated in Figure 8.64o can be used in the laboratory or as an on-line industrial viscometer. The measurement involves alternately energizing two coils (A and B). The coils cause a piston, located in the inner cavity of the probe, to move back and forth within the cavity. The piston is held within the cavity by the deflector plate, which also serves to direct the process fluid into the measurement cavity. Because movement of the piston is resisted by the viscosity of the process fluid that fills the cavity, its travel time increases as the process viscosity rises. The travel time of the piston is measured as an indication of viscosity. The piston is lightweight, to minimize gravity and vibration effects, and the inward and outward travel times are averaged to minimize flow-force effects. About 30 sec is needed to make a measurement.

This viscometer is provided with an internal resistance temperature detector for temperature compensation. It can operate at high pressures (up to 10,000 PSIG, or 700 barg), and high temperatures (600°F, or 315°C). The wetted parts of the sensor are made of stainless steel and Teflon. It can be provided with a choice of pistons to cover viscosity ranges from 0.1 to 2 cP up to 1000 to 20,000 cP. The process fluid should be free of solid particles that exceed about 25 m in size. The inaccuracy claimed is 2% of actual reading or better. The electronics are available in explosion-proof construction and can serve as both display and transmitter units.

Bibliography

Baird, D. G. et al., *Polymer Processing Principles and Design*, John Wiley & Sons, New York, 1998.

Bandrup, J. and Immergut, E., *Polymer Handbook*, 3rd ed., John Wiley & Sons, New York, 1989.

Bourne, M. C., Food Texture and Viscosity Concept and Measurement, Academic Press, New York, 1997.

Cho, Y. I., Hartnett, J., and Lee, W. Y., Non-Newtonian viscosity measurements in the intermediate shear rate range with falling-ball viscometer, *J. Non-Newtonian Fluid Mech.*, April 1984.

Dearly, J. M., Official nomenclature, *J. Rheology*, 28(3), 181–195, 1984.

Dutka, A. P., et al., Evaluation of a capillary-coriolis instrument for online viscosity and density measurement, *Proc. TAPPI Process Control, Electrical and Instrumentation Conf.* (ISA), March, 1997.

Fitzgerald, J. V. and Matusik, F. J., A viscometer for many purposes, *Meas. Control*, June 1986.

Harsveldt, A., Capillary viscometer to characterize the rheology behaviour of blade coating colours, *Paper Technol. Indust.* (UK), January/February 1981.

Jung, F. et al., The capillary tube-plasma viscometer, *Biomedizinische Technik* (Germany), November 1983.

Kim, H. K., Co, A., and Ficke, A. L., Viscosity of black liquors by capillary measurements, Symposium Series, No. 207, Vol. 77, AICHE 1981.

Kohini, J. L. and Plutchok, G. J., Predicting steady and oscillatory shear rheological properties of CMC/guar blend using the bird-carrean constitutine model, *J. Texture Studies*, 18, 31–42, 1987.

Melekhin, A. N. and Sokolov, L. K., Investigation of static and dynamic characteristics of an automatic ball-type viscometer, *Teploenergetika* (USSR), April 1981.

© 2003 by Béla Lipták

Rabinovich, V. A. et al., *Viscosity and Thermal Conductivity of Individual Substances*, Begell House, New York, 1997.
Schramm, G., An introduction to rheology and viscometry: rotary viscometers, *Regulacion y Mando Automatico* (Spain), November 1984.
Selby, T. W., Use of scanning Brookfield technique to study the critical degree of gelation, SAE paper #910746, Society of Automotive Engineers, Warrendale, PA, February, 1991.
Sheble, N., How do you like your mashed potatoes? *InTech*, June 2002.
Skeist, I., *Handbook of Adhesives*, 3rd ed., Van Nostrand Reinhold, New York, 1989.
Viscometers, *Meas. Control*, June 1993.
Walsh, L., *Quality Management Handbook*, Marcel Dekker, New York, 1986.
Zhang, Z. et al., Viscosities of Lead Silicate Slags, *Minerals Metall. Process.*, 19(1), February 2002.

© 2003 by Béla Lipták

8.64 Viscometers—Industrial

C. H. KIM (1969, 1982) **B. G. LIPTÁK** (1995) **J. E. JAMISON** (2003)

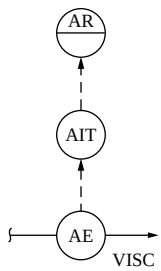

Flow Sheet Symbol

Types:

A. Capillary
- A1. Differential pressure
- A2. Backpressure

B. Falling element
- B1. Falling ball
- B2. Falling piston
- B3. Falling needle

C. Float in variable-area flow meter
- C1. Single-float
- C2. Two-float
- C3. Concentric

D. Oscillating element
- D1. Oscillating blade
- D2. Oscillating piston
- D3. Torsional oscillating element

E. Plastometers
- E1. Cone and plate
- E2. Kneader
- E3. Capillary extrusion

F. Rotational element
- F1. Rotating cone
- F2. Agitation power
- F3. Double cylinder

G. Vibrating
- G1. Reed
- G2. Ultrasonic
- G3. Rod

H. Coriolis mass flow meter
- H1. Measuring tube torsional movement

Design Pressures, Temperatures, Viscosity Ranges, Errors:

See Orientation Table 8.64a

Materials of Construction:

A, B. Hardened stainless steel or other corrosion-resistant metals
C. Same choices as for variable-area flow meters
D1. Wetted parts, stainless steel; sealing ring, silicone rubber
D2. Stainless steel and Teflon®
D3. E, F. Hardened stainless steel
G, H. Wide selection of corrosion-resistant materials and coatings

Speed of Response:

A. From 1 sec to about 5 min
B2. Cycle time from 30 sec to 3 min
C, E, F, H. A few seconds
D1. Strokes every 2 sec, readings averaged over an adjustable number of strokes
D2. About 30 sec
H. Less than 1 sec

© 2003 by Béla Lipták

Costs:

A1. Balanced dual-capillary element without d/p transmitter for fuel oil service, $3000 to $4000
B1. Falling ball viscometer, from $7000 to $16,000; high-pressure design with digital readout of ball roll time corrected for density, $23,000
B2. From $2500 to $8000; a driven-piston element, $4000
C1 and C2. Two-float indicators with brass or stainless steel fittings in sizes from 0.5 to 1.5 in. (12 to 38 mm), from $1500 to $3000
C3. 1.5-in. (38-mm) transmitter in stainless steel with 300 PSIG flanges, $8000
D2. Sensor with explosion-proof transmitter, $6000 to $8000
D3. Microprocessor-based temperature-compensated transmitter, $15,000
E. $10,000 to $60,000, depending on features and on degree of automation
F1. Variable-speed microprocessor-based units from $15,000 to $25,000
G. $3000 to $5000, depending materials of construction and transmitter features
H. $400 to $20,000, depending on line size for the in-line treatment

Partial List of Suppliers:

Automation Products (G) (www.dynatrolusa.com)
Benz Co. Inc., Edwin H. (B1), (www.benztesters.com)
Bohlin Rheologi (E) (www.bohlinusa.com)
C. W. Brabender Instruments Inc. (E, F1) (www.cwbrabender.com)
Brookfield Engineering Laboratories Inc. (F1) (www.brookfieldengineering.com)
BTG Inc. (D1, F3) (www.btghome.com)
Cambridge Applied Systems Inc. (D2) (www.cambridge-applied.com)
CB Engineering Ltd.(www.cbeng.com)
Conameter Corp. (A1); Dynatrol Viscosity Systems (G3) (www.dynatrolusa.com)
Endress + Hauser (H) (www.endress.com)
Extech Instruments (B2) (www.extech.com)
Fischer & Porter, a Unit of ABB Inc. (C1, C2, C3) (www.abb.com/us)
Gam Rad West Inc. (B1, E) (1-800-321-8452)
Nametre Co. (D3, F1) (www.nametre.com)
Norcross Corp. (B2) (www.viscosity.com)
Petroleum Analyzer Co. (PAC) (A, B2) (www.petroleum-analyzer.com)
Ruska Instrument Corp. (B1) (www.ruska.com)
Solartron Mobrey (G1) (www.solartronusa.com)
Stony Brook Scientific Ltd. (B3) (www.stonybrooksci.com)
Techne Inc. (E3) (www.techneusa.com).

INTRODUCTION

This section covers viscometers that can be installed in a tank or pipe in an industrial environment. The portable and bench-top laboratory viscometers are discussed in the previous section. The distinction between the two groups is not a sharp one, and some of the rotary, capillary, cone-and-plate, and piston designs are actually used in both services.

In this section, centipoise (cP) and centistokes (cSt) are the viscosity units used. For conversion between these and others, refer to Tables 8.62d, 8.62e, A.2p, A.2q, and A.2r.

A summary of industrial viscometer features and capabilities is given in the Orientation Table 8.64a. In the following paragraphs, the various viscometer designs are discussed in the same order as listed in the Orientation Table.

CAPILLARY VISCOMETERS

Continuous capillary viscometers are successfully used in oil refineries to control various products such as fuel oils, hydraulic oils, lubricating oils, fuels, and various grades of asphalts. They are also used in fuel oil viscosity control to optimize atomization in the power industry.

As shown in Equation 8.62(2), the pressure drop under viscous flow conditions is linearly proportional to viscosity. Therefore, at constant flow rate, the pressure drop in a capillary can be used as a measure of viscosity.

Sensor for Newtonian Fluids

Newton's hypothesis assumed that the viscosity of a fluid is independent of the rate of shear or of the shearing force of deformation, as long as the flowing temperature and pressure are fixed. Fluids that behave in this manner are called newtonian. Based on Poiseuille's law [Equation 8.62(2)] and Newton's hypothesis, we can observe that, if the flow rate through a fixed capillary tube is held constant, the absolute viscosity of the flowing liquid will be a linear function of the capillary pressure drop.

Continuous capillary viscometers are primarily designed to measure the viscosity of newtonian liquids. Because d/p transmitters are used to measure the viscosity, they are also readily adaptable to the automatic control of processes.

© 2003 by Béla Lipták

TABLE 8.64a

Orientation Table for Industrial Viscometers

Type of Design	Features	Provides Continuous Signal	In-line Device	Laboratory Device	Local Readout	Remote Readout Trans.	Temp. Compensation	Fluids: Gas	Fluids: Newtonian	Fluids: Non-Newtonian	Maximum Design Pressure, PSIG (1 Bar = 14.2 PSI)	Maximum design Temperature, °F [°C = (°F −32)/1.8]	Inaccuracy (±%) (1) Based on Full Scale (2) Based on Measurement	Minimum Sample Size or Flow Rate
Continuous capillary	Differential pressure	✓	✓	✓	✓	✓			✓		670	900	1–2(1)	1–4 GPH
	Back pressure	✓	✓	✓	✓	✓			✓		500	210	1.0(1)	1 GPH
Coriolis	Torsional	✓	✓		✓	✓	✓		✓	✓	1,440	302	5.0(2) or ± 0.5 cP	—
Falling element	Ball or slug		✓	✓	✓	✓	✓		✓	✓	300	350	1.0(1)	—
	Piston		✓	✓	✓	✓	✓		✓	✓	500	650	1.0(1)	—
	Needle		✓	✓	✓	✓	✓		✓	✓	2000	662	1.0(1)	—
Float	Single float	✓	✓	✓	✓	✓			✓	✓	650	450	4.0(2)	0.75–2 GPM
	Two-float	✓	✓	✓	✓	✓	✓		✓	✓	300	450	2–4(2)	0.25–2.5 GPM
	Concentric	✓	✓	✓	✓				✓		650	450	2–4(2)	2 GPM
Oscillating	Blade		✓	✓	✓	✓			✓	✓	375	150	1.0(1)	Up to 6.5 fps (2 m/s)
	Piston	✓	✓	✓	✓	✓	✓		✓	✓	10,000	700	1.0(2)	
	Torsional	✓	✓	✓	✓	✓	✓		✓	✓	5,000	850	2.0(2)	
Plastometer	Cone and plate			✓	✓	✓				✓	100	400	0.5(1)	25 CC
	Kneader	✓	✓	✓	✓	✓				✓	ATM.	570	1.0(1)	80 CC
	Capillary	✓	✓	✓	✓	✓				✓	5,000	570	2.0(1)	0.6 #/HR
Rotational	Cone disc sphere	✓	✓	✓	✓	✓	✓		✓	✓	1,000	650	1.0(1)	—
	Agitator power	✓	✓		✓	✓			✓	✓	125	200	~5.0(1)	—
	Double cylinder	✓	✓			✓			✓	✓	2465	572	1.0(1)	—
Vibrational	Reed	✓	✓	✓	✓	✓	✓		✓	✓	3,000	392	1.0(1)	—
	Rod	✓	✓	✓		✓	✓		✓	✓	1,485	500	1.0(1)	—

Applicable Viscosity Ranges in Centipoise

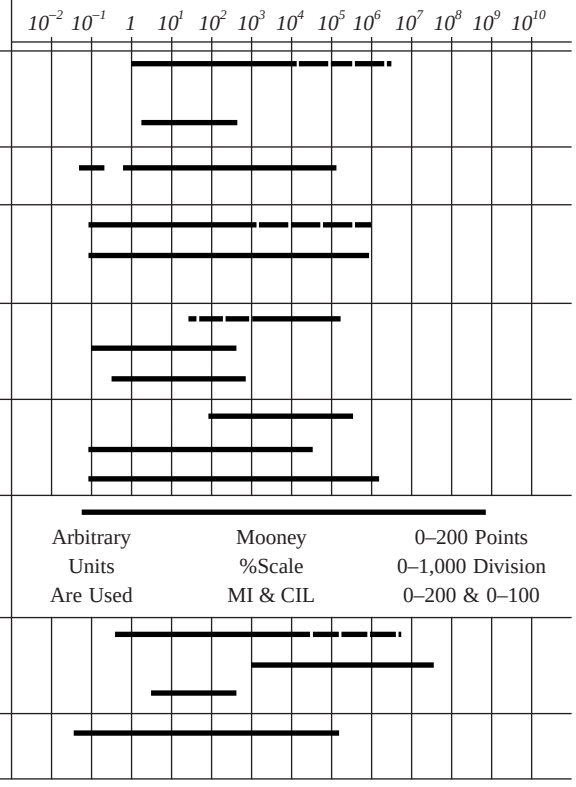

© 2003 by Béla Lipták

In most capillary-type viscometers, the temperature effect on the measurement is eliminated not by temperature compensation but by temperature controls. This is done by a thermostatic device that keeps the sample at a constant reference temperature as it enters the capillary tube.

This type of viscometer can measure viscosities up to 15,000 poise (1500 Pa·s) and can operate at temperatures up to 900°F (480°C). The viscosity span of this sensor is a function of the bore and the length of the capillary. To minimize the end effects (the nozzle effect at the tip of the capillary), the use of large-diameter bores and long capillary tubes is recommended.

Limitations

Although this type of continuous viscometer is simple enough to be field fabricated (rather than purchased), one of its chief disadvantages is that, for accurate and reliable measurements, the capillary tube must be kept absolutely clean. But fouling is likely to occur, because the capillary tube diameter is very small—usually in the range of 0.05 to 0.2 in. (1.25 to 5 mm).

Because the sample flow rates must be low, this requirement limits the continuous capillary viscometer to by-pass installations, where the goal is to automatically control the processes with minimal time lag.

Other potential error sources include (1) fluctuating flow rates through the capillary tube, (2) a dirty or plugged capillary, (3) leakage in the viscometer, (4) incorrectly set or drifting transducer zero and span, (5) fluctuating fluid pressure, (6) insufficient sample supply pressure, and (7) fluid temperature fluctuations due to thermostat malfunctions or to variation in sample supply temperature.

Calibration

The continuous capillary viscometer can be calibrated using the following equations:

$$d = \sqrt[4]{\frac{6\mu VL}{\Delta P \times 10^9}} \qquad \textbf{8.64(1)}$$

$$\mu = \frac{\Delta P d^4 \times 10^9}{6VL} \qquad \textbf{8.64(2)}$$

Equation 8.64(1) is used to calculate the diameter of the capillary tube when the viscosity of the process fluid is known. Equation 8.64(2) is used to prepare the calibration curve of viscosity versus pressure drop using several fluids of known viscosity. Such a calibration should produce a straight line that goes through the zero point of the viscosity and pressure drop coordinates.

There are basically two types of viscometers that utilize the continuous capillary principle. One type measures the pressure drop across the capillary tube, and the other measures the upstream pressure as the sample flows through the capillary tube.

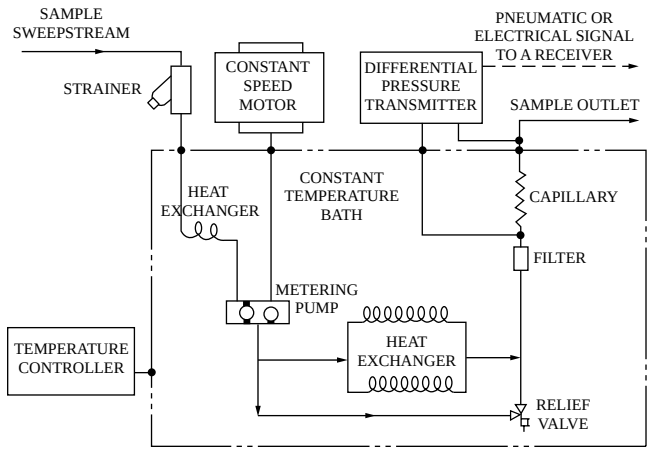

FIG. 8.64b

Schematic flow diagram of a differential-pressure-type continuous capillary viscometer.

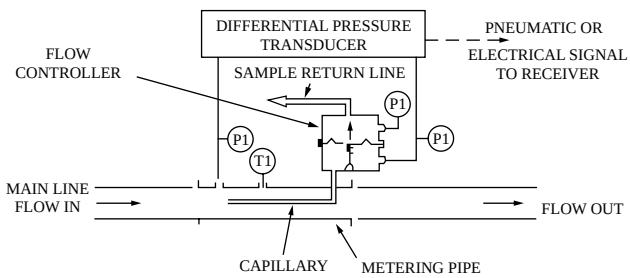

FIG. 8.64c

Schematic diagram of an in-line, differential-pressure-type continuous capillary viscometer.

Differential Pressure Type

Figure 8.64b is a schematic flow diagram of a differential pressure viscometer, which requires a bypass installation. An external strainer is provided to remove any solids from the sample before it enters the viscometer. A constant sample flow rate (at about 1 GPH or 3.8 l/h) is maintained by a precision metering pump, which is driven by a synchronous motor.

Two heat exchangers, before and after the metering pump, are used to keep the sample fluid in thermal equilibrium with the thermostatic bath. A relief valve protects against damage caused by excessive pressures that may occur in a blocked capillary.

The pressure drop across the capillary is measured with a differential pressure transducer, which is connected to the inlet and outlet sides of the capillary. The d/p transmitter output is a linear indication of the process viscosity and is used for indicating, recording, or controlling the process.

This type of viscometer can measure viscosities up to 2500 cP (2.5 Pa·s) and can operate at temperatures up to 240°F (116°C). If high-pressure capillaries and high-pressure metering pumps are used, the viscosity measurement can go up to 15,000 P (1,500 Pa·s) and the line pressures can reach 670 PSIG at 900°F (4.6 MPa at 480°C).

© 2003 by Béla Lipták

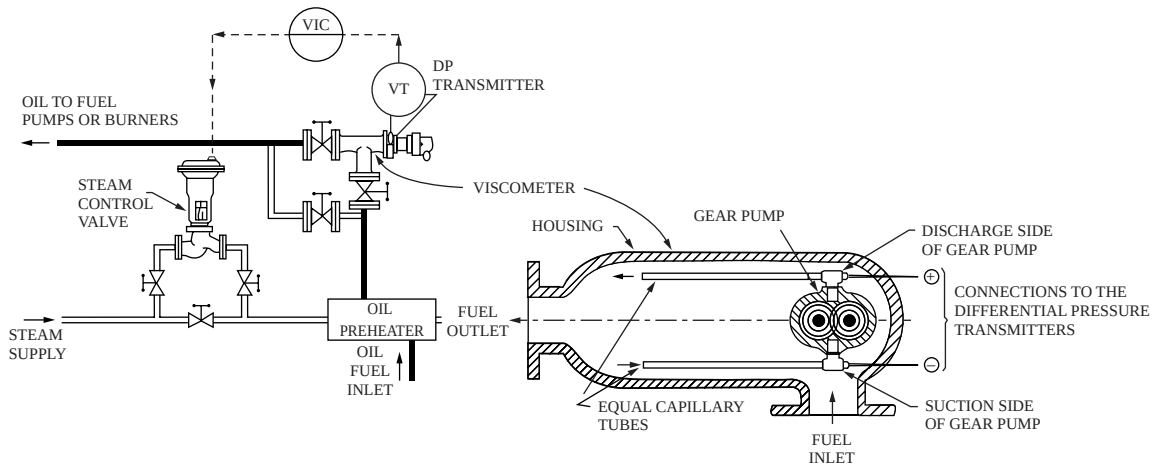

FIG. 8.64d
Balanced dual-capillary viscometer used to control oil viscosity, which guarantees proper atomization and therefore improved combustion efficiency. (Courtesy of Conameter Corp.)

The range and span of the d/p transmitter determine the range of a single capillary tube. Overall inaccuracy is about ±1% of full scale, with repeatability being about the same. The average response time is about 2 min (0.6-min time constant), but it varies with the length of the sample loop.

In-Line Design To reduce the response time of the viscometer to less than 1 sec, the capillary tube can be inserted into the main process stream, and sample flow rate can be increased to about 4 GPH (15.2 l/h), as shown in Figure 8.64c. In this design, the constant flow rate through the capillary tube is maintained by a pressure-regulated, diaphragm-type flow controller.

The error in this measurement is higher than with the external sampling design, and inaccuracy is about ±2.0% of full scale when measuring viscosity in the range of 5 to 30 cSt (5×10^{-6} to 30×10^{-6} Pa·s).

One advantage of this design is its increased speed of response. Another advantage is that, because the viscosity measurements are made at the process stream temperature, this viscometer can be used as a viscosity controller that maintains constant fluid viscosity by adjusting temperature. Such applications include controlling fuel oil viscosity to maintaining optimal atomization patterns in industrial furnaces, heating plants, steam power stations, and marine boilers.

Dual-Capillary Design Figure 8.64d illustrates a dual-capillary viscometer that is used for controlling the viscosity of fuel oil to boilers and other burners. The dual-capillary design is superior to the single-capillary units, because it is unaffected by variations in fuel line pressure.

Dual-capillary viscometers are installed because keeping the viscosity constant guarantees consistent atomization of the fuel, which, in turn, improves combustion efficiency. In this viscometer, a gear pump, which is inserted into the fuel oil pipe, takes a constant flow-rate sample of the oil and discharges it continuously back into the oil stream. As the flow rate is constant, the difference between pump suction and discharge pressures is a linear function of viscosity. This pressure difference is measured by a d/p cell and is kept constant by adjusting the heat input into the oil preheater.

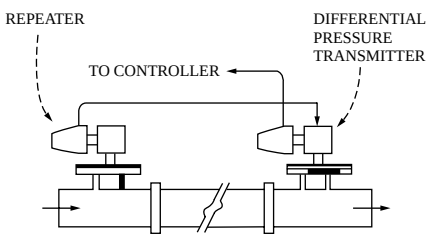

FIG. 8.64e
Differential pressure measurement, using extended diaphragm sensors across any section of process pipe to detect viscosity.

This in-line viscometer is provided with 2-in. (50-mm) DIN flanges, and the flow through it can be up to 100 GPM (380 l/m). The fuel oil pressure can be up to 500 PSIG (35 barg), and the temperature can be up to 300°F (149°C). The differential pressure range of the d/p cell is 0 to 150 in. (0 to 3.8 m) of water, which in units of viscosity can correspond to 0 to 300 SUS, 0 to 200 Redwood 1, or 0 to 6° Engler.

Pipe Section as Viscometer If the flow is constant or is measured, and therefore it is possible to compensate for the variations in flow rate, the pressure drop through any pipe section in the plant (Figure 8.64e) can be used to detect viscosity. As long as the inner walls of the pipe section are clean, and as long as the temperature and flow variations are compensated for, the detected pressure drop will be linearly proportional to viscosity.

Backpressure Type

The operation of this viscometer is quite similar to the differential pressure type except that it measures only the upstream pressure to a capillary tube that discharges to the atmosphere or returns the sample to a pressure-regulated process line.

© 2003 by Béla Lipták

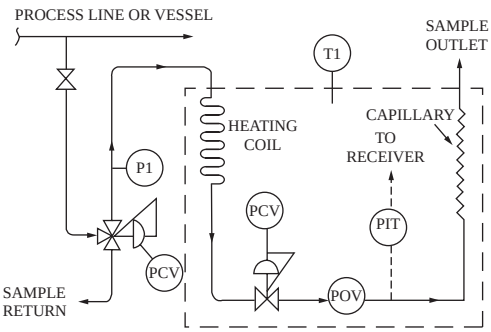

FIG. 8.64f
Schematic system diagram of a backpressure-type continuous capillary viscometer.

As shown in Figure 8.64f, the sample fluid is continuously fed to the instrument from the process line or from a vessel. The sample temperature is maintained by flowing through a heat exchanger, which is immersed in a constant-temperature bath. The sample then passes through a pressure regulator followed by a flow controller. Under these conditions of constant flow rate and constant temperature, the sample pressure at the entrance to the measuring capillary tube is linearly proportional to the viscosity of the liquid.

The inlet pressure to the capillary is sensed by a strain gauge. The strain gauge signal is converted to the desired units of viscosity and is transmitted to indicate, record, or control the process viscosity. Because this viscometer measures only the inlet pressure to the capillary tube, it is extremely important to maintain the outlet side at constant pressure by discharging the capillary to atmosphere or to a pressure-regulated vessel or pipeline.

The backpressure-type viscometer can measure viscosities within the range of 5 to 500 cSt (5×10^{-6} to 5×10^{-4} Pa·s) at temperatures up to 210°F (99°C). Its overall inaccuracy and repeatability are ±1% of full scale, and its response time is 3 to 6 min.

FALLING-PISTON VISCOMETER

The falling-piston viscometer has been used in paper sizing, printing, coating, polymerization, starch conversion, textile sizing, and blending process applications. The working principle of the falling-piston viscometer is quite similar to the falling-ball viscometer, discussed in the previous section in connection with Figure 8.63n. Because of its excellent reproducibility, the falling piston viscometer can be used for the measurement of the viscosity of both newtonian and non-Newtonian fluids.

The measuring element consists of a piston inside a measuring tube as shown in Figure 8.64g. The measuring element can be installed in a tank (open or closed) or in a liquid-filled pipeline, as long as the measuring tube is completely immersed in the fluid.

During the filling phase, the piston, which is resting at the bottom of the tube, is automatically raised by an air lifting mechanism or by a motor-cam mechanism. As the piston is raised, a sample of the liquid is drawn in through the openings in the sides of the tube and fills the measuring tube as the piston is withdrawn.

Process Pressure-Operated Design

In some in-line units, the piston can be raised by the process fluid itself. In such designs, the measuring tube is filled

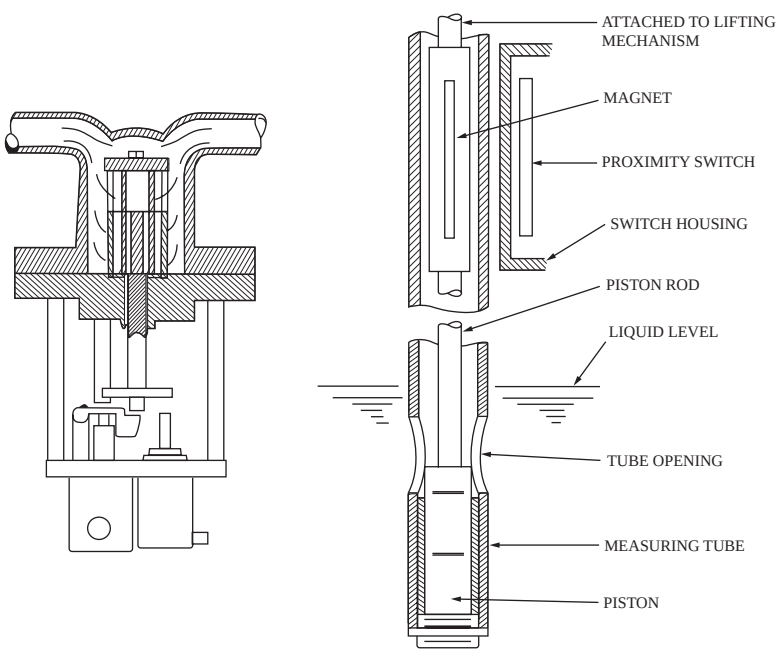

FIG. 8.64g
The falling-piston viscometer.

© 2003 by Béla Lipták

through an opening at the bottom of the tube, and the filling and measuring cycles are controlled by the periodic opening and closing of a valve. The pressure drop across the measuring tube is about 5 PSI (35 kPa).

During the measuring phase, the piston assembly is allowed to fall by gravity, expelling the sample out of the tube through the same route that it entered. The time of fall is a measure of viscosity, using the clearance between the piston and the inside wall of the measuring tube as the measuring orifice. The timed interval is then displayed on an indicator or recorded. For process control or for high-low alarm purposes, the intermittent time signal is converted to a continuous signal by a simple clutch mechanism or by a sling-wire mechanism that is linked to the recorder pen.

When high-viscosity materials are to be detected, and it is desired to make the measurement within a reasonable cycle, a two-way air cylinder is used to lift and force down the piston. This design also accommodates the use of any mounting position that is desired.

The viscosity range of this sensor is from 0.1 to 10^6 cP (10^{-4} to 10^3 Pa·s). Each piston has a 100:1 range. The inaccuracy of this viscometer is 1% of full scale, and the reproducibility and sensitivity are 0.25% and 0.1% of full scale, respectively.

Because the cycle frequency of the measurement is from once every two minutes up to two cycles per minute, it is applicable to both batch and continuous process applications, with or without automatic process-control capabilities. Pressure and temperature ratings of the standard in-line unit are from full vacuum to 300 PSIG (2 MPa) and for up to 650°F (340°C). A special high-pressure unit is available for operating pressures up to 500 PSIG (3.5 MPa).

Precautions

As in the case of all other viscometers, operating temperature and pressure should be specified and kept constant when using this sensor. The error caused by small variations in the process fluid temperature can be substantial, so the use of either a temperature-controlled sampling system or a temperature-compensated design should be used. Naturally, if compensation is the choice, the viscosity vs. temperature relationship must be accurately known.

Because this viscometer operates in a batch manner, it should not be used where fast (less than one minute) response time is required. Where a sampling loop is used, the rate of sample pumping should be set to minimize the lag time. To obtain reasonable reproducibility, the following should be observed:

1. Avoid any vapor entrainment in the sample liquid caused by agitation or boiling.
2. Avoid turbulence.
3. Calibrate the instrument regularly to correct for measurement drift caused by gradual material buildup or for wear of the piston and tube.
4. The measuring unit should be cleaned at regular intervals—frequency depends on the rate of material buildup.
5. An in-line filter should be used to remove any larger sized solids or foreign materials. The maximum allowable size of solids remaining should be small enough that they will not interfere with the measurement.
6. Sensitivity requirements should be known for blending process applications.
7. Do not use this viscometer if the process liquids have poor flow characteristics.
8. Erratic readings may result if this detector is subjected to severe vibration.

Falling-Slug or Falling-Ball Viscometers

This instrument automatically measures the time required for a cylindrical slug of a specific density to fall a given distance in a vertical tube, which is filled with the process liquid at a constant temperature.

As shown in Figure 8.64h, this viscometer operates by the sample pump first purging the system of the previous sample and then introducing a fresh one. Two separate thermostats control the purge and recirculation cycles by changing the direction of flow through a three-way valve.

In the recirculation phase, the sample pump flow raises the slug to the top of the fall tube. When the sample temperature has stabilized and matches the thermostat set point, the pump and the sample flow stops, thereby permitting the slug to fall. As it does, it actuates two magnetic switches that are attached to the side of the fall tube.

The first switch starts the recorder motor. When the slug sinks to and actuates the second magnetic switch, located at an adjustable distance (1 to 20 in., or 25 to 500 mm) below the first, this switch stops the recorder motor. The resultant time measurement is directly proportional to the viscosity of the sample. Actuation of the lower switch also initiates the system purge phase.

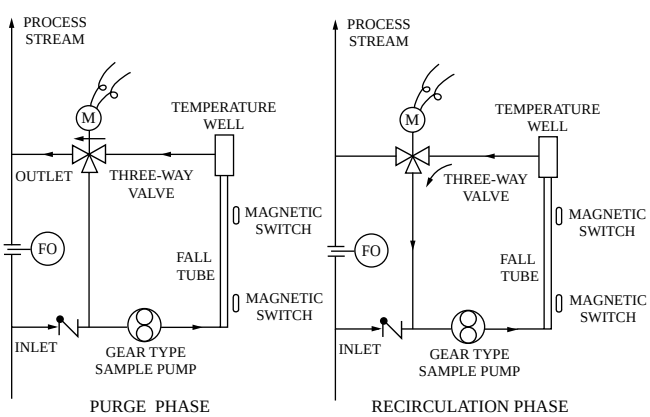

FIG. 8.64h

The purge and the recirculating (measuring) cycle of the falling-slug viscometer.

© 2003 by Béla Lipták

The viscosity range of this detector is 10 to 1,000,000 cP (0.01 to 10^3 Pa·s). The specific ranges for particular applications are field selectable by adjusting the distance between the two magnetic switches on the fall tube. Full scale indication can be selected from 10 to 250 sec in five steps. The inaccuracy and the reproducibility of this viscometer are both about ±1% full scale, depending on the precision of the thermostat and of the recorder. Errors caused by small variations in the process fluid temperature can be substantial.

The viscometer is designed to operate at temperatures up to 300°F (150°C) and at pressures up to 200 PSIG (1.4 MPa). This detector is suited for continuous viscosity measurement applications in which it is sufficient to make a reading once every 3 min. The falling-slug viscometer is recommended for use only on clean process fluids that are not shear sensitive.

FLOAT VISCOMETERS

The float viscometer has been successfully used to maximize combustion efficiency by controlling the viscosity of fuel oils in marine and stationery boilers. Other areas of application have been in measuring the viscosity of cement slurry, starch, glue, and petroleum products (motor oils).

These viscometers are used both industrially and in the pilot plant to measure the viscosity of process fluids and to continuously indicate, record, or control the process. This type of viscometer is used in a closed-flow system. The operating principle is similar to that of the variable area flow meter (Section 2.27), where the viscous drag force on a float is proportional to the orifice opening required (between float and tapered tube) to move the fluid through that orifice at a constant flow rate.

In a rotameter-type flow meter, the forces acting on the float are affected by the flow rate, by the float and liquid specific gravity, and by the viscosity of the fluid being metered. For flow metering applications, the floats are designed so that the viscous drag area is relatively small, so the float is relatively insensitive to viscosity while being sensitive to flow rate and density changes.

In the viscometer version of this design, the flow rate through the variable area meter is held constant. Therefore, if the position of the float changes, that change is an indication of a change in fluid viscosity and density or in kinematic viscosity. To increase its sensitivity, the viscometer float is designed with a large viscous drag area. To obtain accurate viscosity measurements with float-type viscometers, the flow rate must be constant. Because this required flow control can be obtained in three different ways, there are three different designs: single-float, two-float, and concentric.

Precautions

When using float type viscometers, the following recommendations should be observed:

1. The float viscometer must be installed vertically, with the outlet at the top.
2. The instrument should be installed in a vibration-free location.
3. The process fluid temperature should be carefully controlled, or temperature compensation should be employed. If no automatic compensation is provided, viscosity vs. temperature curves should be available for use by operating personnel.
4. The flow rate and the pressure of the process fluid should both be constant and smooth, pulsating metering pumps should not be used.
5. The process fluid should be free of foreign material to prevent plugging of the small orifice (0.1 in., or 2.5 mm, dia. min.) inside the viscometer. The use of in-line filters is recommended to remove all foreign materials.
6. Install the viscometer in a bypass line to permit the flushing of the main pipeline and to facilitate viscometer maintenance and service.
7. Make certain that the specified operating conditions are not exceeded.
8. The viscometer should be periodically recalibrated using a known viscosity fluid. At the time of calibration, the tube and float should also be cleaned.
9. The sample fluid flow rate through the instrument should be sufficient to give good speed of response and sensitivity, but the rate of flow should not cause turbulence within the viscometer, which would result in erratic readings.
10. All air and vapor entrainment should be removed from the sample liquid.
11. When the process temperature is other than ambient, make sure the viscometer is insulated or stream traced, as required.

Single-Float Design

The single-float viscometer is a continuous and direct reading viscosity instrument. As illustrated in Figure 8.64i, a positive displacement pump (other flow control devices can also be used) provides the constant sample flow rate through the instrument.

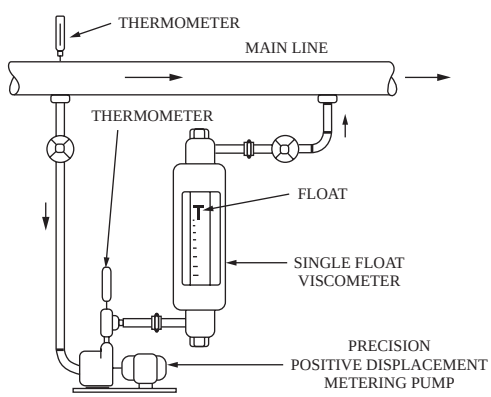

FIG. 8.64i
Typical piping arrangement of a single-float viscometer.

© 2003 by Béla Lipták

The recommended flow rate is between 0.75 and 2.0 GPM (2.9 and 7.6 l/m). Automatic temperature compensation is not available for this type of direct reading viscometer. If a metering pump is used to generate the constant flow rate, the temperature rise through the pump should be measured and corrected for by the use of a viscosity vs. temperature curve.

The single-float viscometer is also available as a transmitter that is used when remote displays or controls are required. In this case, the float position is detected by the use of an armature attached to the float extension rod with a magnetic sensing device around its outer periphery.

The glass tube viscometer is rated for 450°F (232°C) temperature and for 90 PSIG (621 kPa) pressure. With steel-tube viscometers, the pressure rating depends on the operating temperature, such as a unit for 650 PSIG service at 450°F (4.5 MPa at 232°C).

The single-float viscometer can be used to measure the viscosity of non-Newtonian fluids at less that 400 cP (0.4 Pa·s) and can handle newtonian fluids up to 10,000 cP (10 Pa·s). The rangeability of this viscometer is between 3:1 and 6:1. The inaccuracy of this sensor is ±4% of actual indication, and the reproducibility is ±4% of indication.

Two-Float Design

This is a relatively low-cost viscometer designed to provide intermittent viscosity measurement in the laboratory, on the test bench, or in industry. It is only for local indication, not for transmission.

The design incorporates two floats. The upper float is sensitive to fluid flow rate, and the lower is sensitive to viscosity. When making a measurement, the fluid flow rate is first manually adjusted to a constant value as indicated by the position of the upper float. Under such conditions, but only while maintaining the volumetric flow constant, the position of the other float indicates the viscosity of the fluid on a direct reading scale.

The recommended piping configuration for a two-float viscometer is shown in Figure 8.64j. In the main pipeline, a throttling valve or an orifice plate can be used between the viscometer inlet and outlet connections to produce the required pressure differential to provide sufficient flow through the instrument. The required flow rate is 0.25 to 2.5 GPM (0.95 to 9.5 l/m), depending on size.

The throttling valve or orifice plate is not required if the outlet can be discharged to a location where the pressure is lower than that of the main pipe. A needle valve should be used on the viscometer inlet to allow sensitive and accurate flow rate adjustment. As a function of size, the unit is rated for pressures up to 300 PSIG at 450°F (2 MPa at 232°C), depending on size.

The two-float viscometer can measure the viscosity of newtonian fluids from 0.3 to 250 cP (10^{-4} to 0.25 Pa·s). It has a rangeability of 10:1 and an inaccuracy of ±4% of indication when the viscosity is higher than 35 cP (0.035 Pa·s). When measuring lower viscosities, the error is ±2%.

Concentric Design

The concentric viscometer (Figure 8.64k) consists of a differential pressure regulator that maintains a constant pressure drop across the meter, and a variable area flow meter, which is provided with a viscosity-sensitivity float. As the fluid enters the instrument, it splits into two streams.

The portion of the fluid that flows upward on the outside, around the differential pressure float, is used to control the pressure drop across the meter. The upper end of the differential pressure float acts as a control valve so that, when the

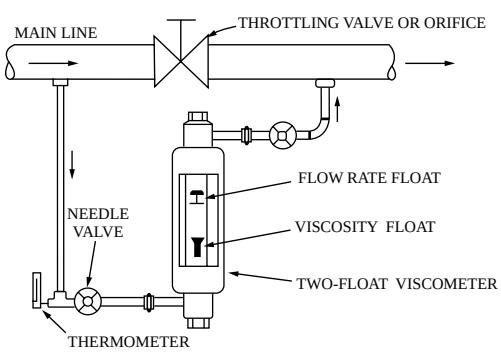

FIG. 8.64j
Typical bypass piping arrangement of a two-float viscometer.

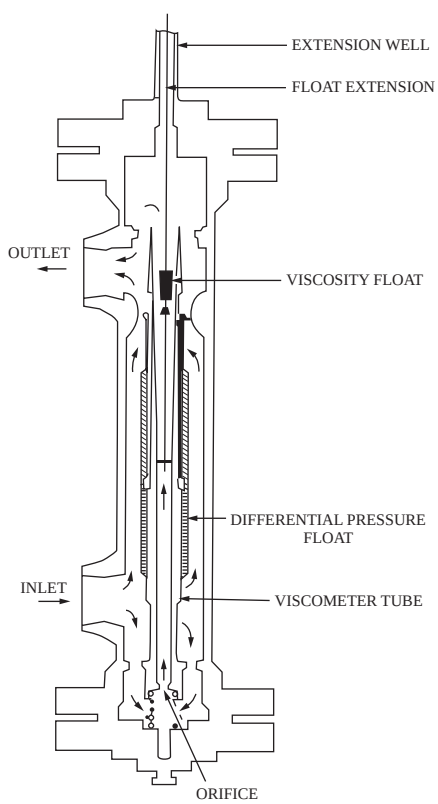

FIG. 8.64k
Cross-sectional view of a concentric viscometer.

© 2003 by Béla Lipták

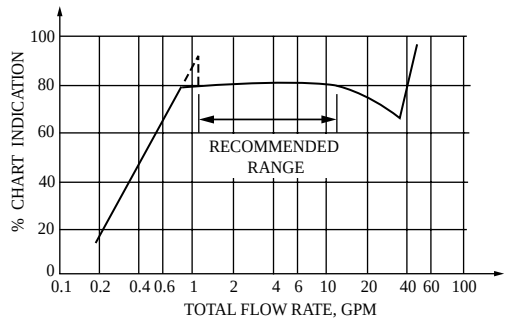

FIG. 8.64l
The characteristics viscosity reading of a concentric viscometer as a function of flow rate through the meter.

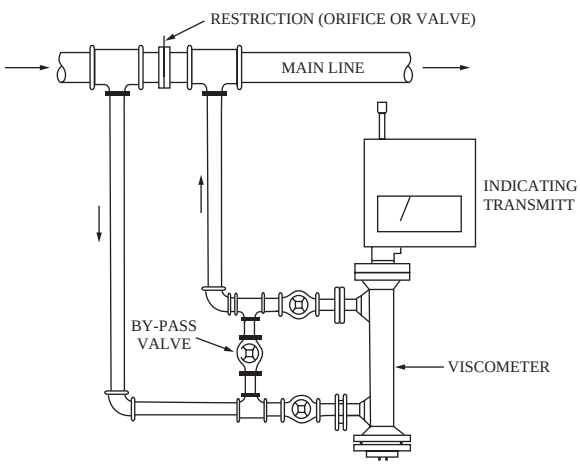

FIG. 8.64m
Bypass installation of a concentric viscometer.

flow rate changes, it throttles the flow to maintain a constant pressure drop. The pressure drop across this portion of the meter is determined by the weight of the d/p float.

The portion of the fluid that flows downward enters the viscometer tube through an orifice and then passes the viscosity-sensitive float. The flow rate through the viscometer tube is maintained constant, because the fluid passes through the orifice at a fixed pressure drop. Thus, constant flow rate is maintained, which is a requirement for the measurement of viscosity.

An extension attached to the viscosity float transmits its movement through a magnetic coupling to a receiver for display, recording, or automatic process control, as desired.

The unit may be placed in either the main process line or in a sample line, depending on the process flow rates. As shown in Figure 8.641, this viscometer does have a flow-insensitive range, so the flow rate through it should not exceed 30 GPM (114 l/m).

The recommended piping configuration for bypass installation is shown in Figure 8.64m. The restriction orifice shown in this figure should be sized for approximately 4 PSI (28 kPa) pressure drop. If a valve is used in place of an orifice, the correct valve position can be determined by slowly opening the valve until the viscometer reading levels off. Further opening will cause the reading to start to fall off and then, when turbulent conditions evolve, rise sharply, as illustrated in Figure 8.641.

The valve openings that produce steady viscosity readings are in the operating range. This procedure should be carried out when the main line flow is at a maximum; after that, the valve should be locked in place to prevent unauthorized adjustments. If the main line flow rate is lower than 2 GPM (7.6 l/m), a booster pump should be used to provide adequate flow rate through the meter. The unit is rated for 650 PSIG pressure at a temperature of 450°F (4.5 MPa at 232°C).

The concentric viscometer can measure viscosities in the range of 0.5 to 550 cP (5×10^{-4} to 0.55 Pa·s) and is available with a span range of 10:1. Its inaccuracy is ±2% of indication for viscosities lower than 35 cP (0.035 Pa·s), and it is ±4% for higher viscosities.

OSCILLATING VISCOMETERS

Oscillating Blade

Figure 8.64n illustrates the oscillating blade viscometer in which, as the blade moves between the fixed side walls, it discharges the process fluid through the openings of one wall of the measuring chamber while pulling in a fresh sample through the other. The blade is rotated around its fulcrum by a plunger/solenoid mechanism as its tip travels the distance between points A and B. When the stroke is completed, the polarity of the current to the plunger coil is reversed, and the blade is returned to its original position.

Adjustable mechanical stops are provided to limit the stroke. The time of travel between points A and B is detected optically as, upon the completion of the stroke, a beam interrupter blocks a light beam. The total stroke time is about 0.2 sec, and the blade makes a stroke about every 2 sec. The average time of several strokes (adjustable) is measured as an indication of viscosity.

This intrinsically safe, indicating in-line transmitter can detect viscosities between 10 and 200,000 cP. It has a minimum span of 20 cP and a maximum span of 200,000 cP. The maximum allowable liquid velocity in the process pipe can be up to 6.5 ft/sec (2 m/s), but the fluid should not contain particles that are larger than 0.04 in. (1 mm) in diameter.

Oscillating Piston

The unit illustrated in Figure 8.64o can be used as an on-line industrial viscometer. In this design, the alternate energization of two coils (A and B) causes a piston, located in the inner cavity of the probe, to move back and forth within the cavity. The viscosity of the process fluid resists the movement of the piston, so the travel time of the piston increases as the process viscosity rises. This travel time is measured as an indication of viscosity. About 30 sec is needed to make a measurement.

© 2003 by Béla Lipták

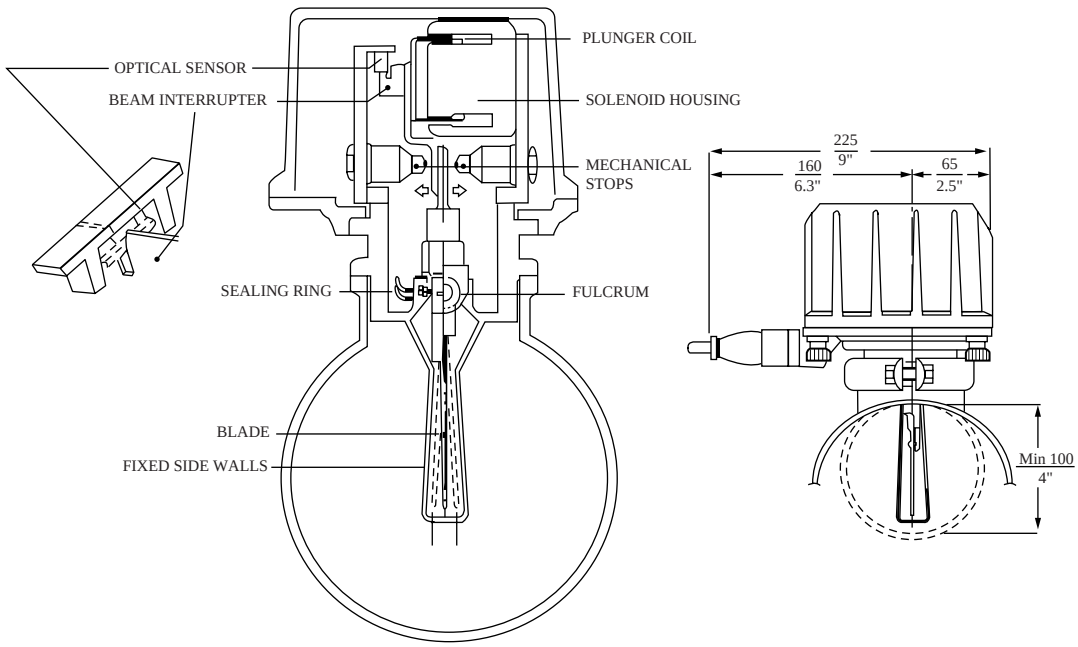

FIG. 8.64n
Oscillating-blade-type viscosity transmitter. (Courtesy of BTG Inc.)

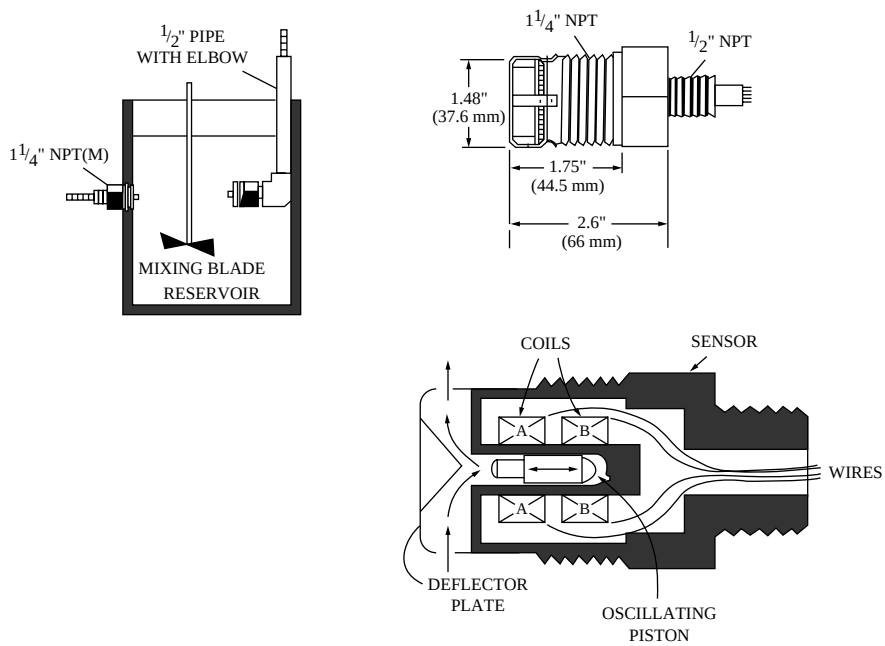

FIG. 8.64o
As the piston is made to oscillate by coils A and B, which are alternately energized, the time of piston travel is registered as viscosity. (Courtesy of Cambridge Applied Systems Inc.)

This viscometer is provided with an integral resistance temperature detector that provides temperature compensation. The oscillating piston viscometer can operate at high pressures (up to 10,000 PSIG, or 700 barg) and at high temperatures (600°F, or 315°C). The wetted parts of the sensor are made of stainless steel and Teflon.

It can be provided with a choice of pistons to cover viscosity ranges from 0.1 to 2 cP up to 1000 to 20,000 cP. To use this sensor, the process fluid should be free of solid particles that are larger than about 25 μm in size. The inaccuracy claimed is 2% of actual reading or better. The electronics are available in explosion-proof construction and can

© 2003 by Béla Lipták

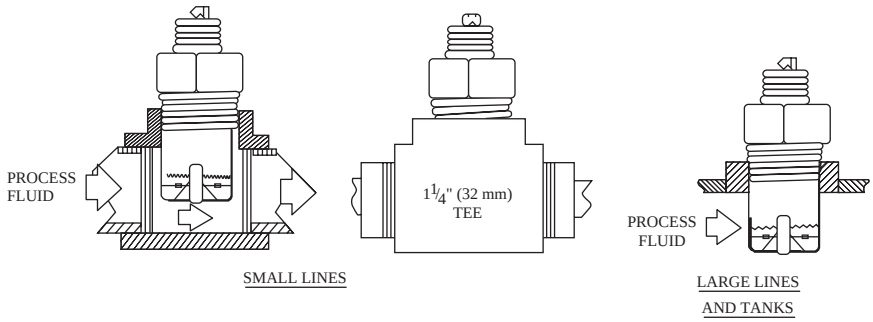

FIG. 8.64p
Pipeline installation of the oscillating-piston viscometer. (Courtesy of Cambridge Applied Systems Inc.)

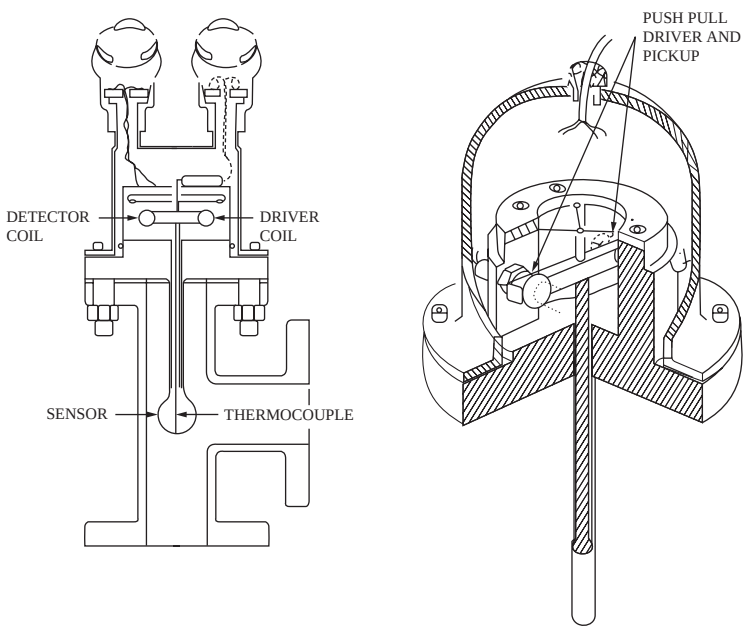

FIG. 8.64q
Torsional oscillation-type viscometers are available with spherical and rod-type probe sensors. (Courtesy of Nametre Co.)

be either the local indicator or the transmitter type. The pipeline installation of this detector is illustrated in Figure 8.64p.

Torsional Oscillation Design

The sensor in a torsional oscillation-type viscometer can either be spherical or rod-shaped. The spherical elements can be used between 0.1 and 200,000 cP, and the rod-shaped ones from 10 to 2,000,000 cP. Both can be exposed to high pressures (5000 PSIG, or 352 barg) and high temperatures (850°F, or 454°C).

As shown in Figure 8.64q, the sensor is electromechanically oscillated in torsion by a rigid inner shaft around its central axis. The amplitude of oscillation is only 1 μm, and the power required to maintain that amplitude is proportional to viscosity. To provide temperature compensation, the temperature of the process fluid is detected by a thermocouple, which is inserted through a central hole in the shaft.

To minimize inaccuracy (error), automatic range switching is available. By always selecting the smallest span to measure the prevailing viscosity, the error can be reduced to 2% of actual reading. In addition, a compensating filter is provided to minimize the effect of pipeline vibrations.

The viscometer reads the product of absolute viscosity (cP) and density. To correct for density variations, the density of the process fluid can be manually dialed in or automatically measured and compensated. These transmitters are available in explosion-proof construction and can be provided with threaded (1.5-in. NPT) or flanged (2-in. Class 150 ANSI) connections.

PLASTOMETERS

Plastometers are employed to study the plastic behavior (melt flow) of plastic materials or the molecular weight distribution of polymers. Some materials do not begin to flow unless the stress has exceeded their yield stress value. Such materials

© 2003 by Béla Lipták

behave as elastic bodies that yield with time as the stresses exceed the yield limit. This phenomenon is called *plastic behavior.*

Plastic Behavior

Prof. Eugene Bingham assumed that the flow rate for such materials was zero when they experienced stresses below a critical value and was linear with stresses above this limit value. A body that behaves in such a manner is called a *Bingham solid* or an *ideal plastic*. Extremely few solids behave in this manner. For most plastic materials, the yield value is not sharp and shows a nonlinear behavior with a delayed and imperfect recovery. The different types of plastics behave differently, and their behavior also changes with temperature.

For this reason, a plastometer gives only a relative indication of polymer behavior, thus characterizing a plastic material. Because the shear stress/shear rate relationship is based on the molecular behavior of materials, the plasticity can be related to the molecular weight of a material or to its distribution. The plasticity of plastic materials is expressed in arbitrary units such as ASTM melt index (MI), Canadian Industries Limited (CIL) flow index, Mooney points, or percent of full scale.

In general, the plastometer consists of a heating chamber to keep the sample at constant temperature, a mechanism to apply a high shear force, and a device to measure torque or flow rate of the sample material and thereby detect the plasticity of the sample. Plastometers can be used in a laboratory (Section 8.63) to study polymeric behavior or used on line to control processes manually or automatically. This type of rheometer is an invaluable tool in manufacturing plastics and synthetic rubbers.

Cone-and-Plate Plastometer

The cone-and-plate plastometer is used to conduct tests in evaluating crude rubber, rubber compounds, or reclaims; in the control of mill breakdown of polymer molecules; in the determination of time to scorch; in the calculation of optimal cure time; and for the evaluation of the processing characteristics of plastics.

This plastometer incorporates the features of the Mooney plastometer and is designed to meet the requirements of ASTM standard test method D-1646. The working principle of this sensor is the same as discussed in connection with laboratory-type cone-and-plate viscometers (Figure 8.63r).

As shown in Figure 8.64r, this detector is designed to eliminate polymer "ball-up" and slippage tendencies by confining the sample in a disc-shaped cavity. Machined serrations provided on all of the die and rotor surfaces prevent slippage. In operation, the sample is introduced into a cylindrical test chamber where integral heaters are used to bring it to the predetermined test temperature (up to 400°F, or 204°C).

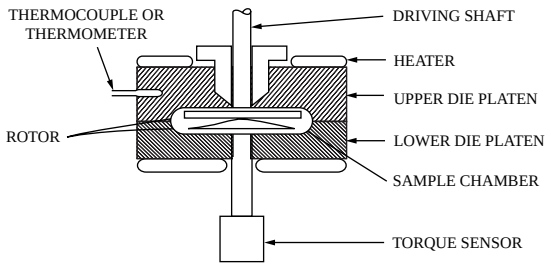

FIG. 8.64r
Cone-and-plate plastometer.

After the warm-up period has been completed, the plastic behavior of the sample is tested by driving the rotor at either a constant speed (normally at 2 r/min) or at various speeds between 0.05 to 2 r/min to test for relative molecular weight. The shearing action that takes place between the rotor and the die cavity is measured by the deflection of a calibrated U-spring, which is attached to the torque sensing rotor.

The deflection of the U-spring is directly proportional to the shearing torque of the specimen being tested. An electronic strain gauge may be attached to the U-spring to transmit this signal for continuous recording. The plastometer operates within a range of 0 to 200 (Mooney) units and has a repeatability of ±0.5 units.

The Unit of Mooney Dr. Mooney gives the following equation to determine the average viscosity $(\bar{\mu})$ of solids:

$$\bar{\mu} = \frac{G\,188.44 g\theta}{2\pi\omega R^3(R/2a + h/b)} \qquad \textbf{8.64(3)}$$

where

G = gauge reading
g = acceleration from gravity
θ = pitch radius of worn gear
ω = angular velocity of rotor, radians/sec
R = radius of rotor, inches
a = vertical clearance between rotor and stator above or below the rotor, inches
h = thickness of rotor, inches
b = effective radial clearance between rotor and stator

Kneader Plastometer

This instrument is widely used in measuring the plastic characteristics of plastic, rubber, food, pigment, cement, paint, cosmetics, and coating products. This type of plastometer is equally suitable for both laboratory and on-line measurement and the control of highly viscous flowing materials. The chief advantage of this instrument is that it measures plastic behavior of melt viscosity under conditions that are very similar to those that exist in the processing equipment.

Many different shapes of measuring heads are available (see Figure 8.64s) to accommodate a wide range of viscosities.

© 2003 by Béla Lipták

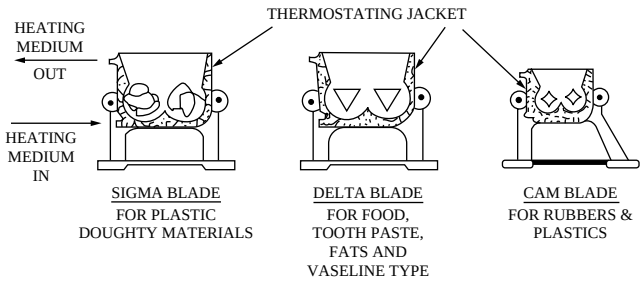

FIG. 8.64s
Measuring heads of kneader plastometer.

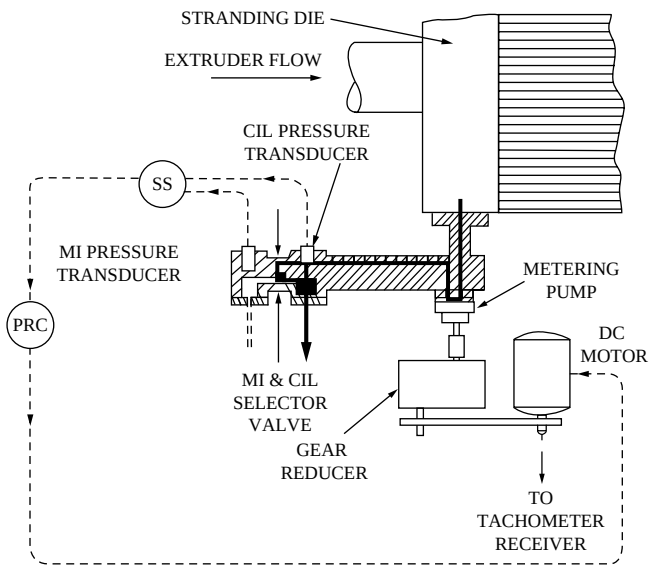

FIG. 8.64t
Pressure-controlled capillary plastomer.

In this plastometer, the jacket heater keeps the sample at a constant temperature (up to 570°F, or 299°C) by the jacketed heater. The kneader is driven by a dynamometer (available with variable-speed and fixed-speed drives). The resistance encountered by the mixing blades is detected and transmitted to the dynamometer housing, which tends to rotate in a direction opposite to that of the driving shaft.

The torque is transmitted for recording or to automatically control processes with medium-viscosity, free-flowing fluids. The readings and recordings are on a 1000-unit division arbitrary scale, used for indicating shearing torque of the specimen being tested. Repeatability is ±1% of full scale. The measurement range can be adjusted.

Capillary Plastometer

This plastometer is designed for use in polymer manufacturing plants and is based on the capillary-tube viscometer principle. The capillary plastometer shown in Figure 8.64t is calibrated to record either ASTM melt index (flow rate of

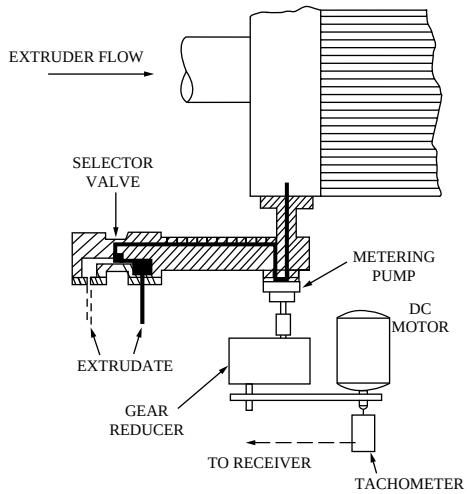

FIG. 8.64u
Flow-sensing capillary plastometer.

polyethylene through an open-ended capillary at 190°C [374°F] and 43.2 PSIG [298 kPa] pressure). It can also record CIL flow index (190°C and 1500 PSIG [10 MPa] for polypropylene) or can alternately record both ASTM and CIL melt indexes.

These two measurements for a particular polymer can be interpreted as both a molecular weight parameter and as a molecular weight distribution parameter. The capillary-type plastometer is not as versatile as the previously described plastometers.

In feeding the capillary type plastometer, the polymer melt is first conditioned to be at some specific temperature and pressure. It is then extruded through a capillary of suitable dimensions. The rate of flow of the polymer through the capillary is measured by detecting the output of the tachometer on the metering pump and is recorded in units appropriate for the test (Figure 8.64u).

The operating range of this plastometer is 0 to 200 MI and 0 to 100 CIL units, with a repeatability within ±2% of full scale. The unit is designed to operate at up to 570°F (299°C) and up to 5000 PSIG (35 MPa) in pressure.

Advantages One advantage of this instrument is that it can be used as an automatic on-line process control device for both viscous fluids and plastic solids. Especially for the solution polymerization processes, the polymer solution can be directly analyzed in this plastometer as the sample is received from the processing reactors through an autosampling device that flashes the solvent and the unreacted monomers, and melts the polymer prior to sending it to the plastometer.

For plastic solids, the die unit (capillary) can be mounted to the pelletizing extruder of the process stream for measurement. The capillary type plastometer is ideally suited for study of plastic behavior of materials that are processed through injection molding or finishing operations.

© 2003 by Béla Lipták

Limitations The following conditions might degrade the accuracy of the measurements obtained using capillary-extrusion viscometers:

1. Nonuniformity of sample shear rate
2. Entrance effects—energy losses at the capillary entrance and discharge points
3. Compressibility of fluids
4. Pressure loss produced by the flow in the sample chamber
5. Temperature gradient created by shear-induced heat

When performing scientific research, great care should be taken to correct for these errors. If that is done, capillary-extrusion viscometers have excellent reproducibility and are well suited for routine industrial and scientific work.

ROTARY VISCOMETERS

Rotating-cone viscometers have been applied chiefly to measure non-Newtonian fluids such as paints, printing ink, starch, size solution, and varnishes. They are designed to operate continuously in industrial environments. They measure viscosity by detecting the torque required to continuously rotate a cone, disk, sphere, or spindle in a liquid. In this type of process viscometer application, the sample is continuously replaced and is subjected to a constant shear rate; thus, the measurement of non-Newtonian apparent viscosity is possible, as well as absolute viscosity measurement of newtonian fluids.

Rotary Spindle Design

In the design illustrated in Figure 8.64v, a synchronous induction motor (for safety) drives a cage coupled through a calibrated spring to a spindle arm that supports the spindle or cylinder in the fluid being measured. During measurement, the spring tends to wind up until the force it generates equals the viscous drag on the spindle. At this point, the cage and spindle both rotate at the same speed but with a definite angular relationship to each other. This angular relationship is proportional to the torque on the spring.

Two methods are used to convert the angular relationship into a viscosity reading. One method is shown in Figure 8.64v, where one side of a variable capacitor is attached to the cage and the other to the spindle arm. A capacitance is thus made proportional to the angular relationship between cage and spindle.

The other method is based on a potentiometer mounted in the cage with its free member connected to the spindle arm. In this case, a resistance is made that is directly proportional to the angular relationship between cage and spindle. In either case, the measured signal is transmitted to a receiver and is converted into viscosity units.

When measuring low viscosities, the variable capacitor type design is preferred. This type of viscometer can measure viscosity ranges from 0–10 cP (0–0.01 Pa·s) to 0–50,000 cP (0–50 Pa·s). Its inaccuracy is ±1% of full scale between the ranges of 0 to 100 and 0 to 50,000 cP (0 to 0.1 and 0 to 50 Pa·s). Its repeatability is ±0.3% of full scale for all ranges.

The response time of this viscometer is less than 30 sec for detecting a full scale change in viscosity. The measurement range of this viscometer can be varied over a 30:1 ratio by changing the size or shape of the spindle. The standard spindle speed is 50 r/min. In some installations, the maximum range can be increased to 0 to 100,000 cP (0 to 100 Pa·s).

Installation This viscometer may be installed on a tank, in an open vessel, or in a sampling line (Figure 8.64w). For in-line installations, the flow rate of the process liquid should be constant, nonpulsating, and laminar (less than 3 GPM [11.4 l/m] for a standard 4-in. [101.6-mm] pipe). Swirling motion in the measurement chamber may be reduced by installation of a spider-type deflector in the inlet port.

The viscometer head is designed to operate at temperatures up to 160°F (71°C) and at pressure ranges of 8 mm Hg absolute to 100 PSIG (1 to 690 kPa). The head should be purged with dry air or other inert gases at a rate of 0.5 ft^3/min

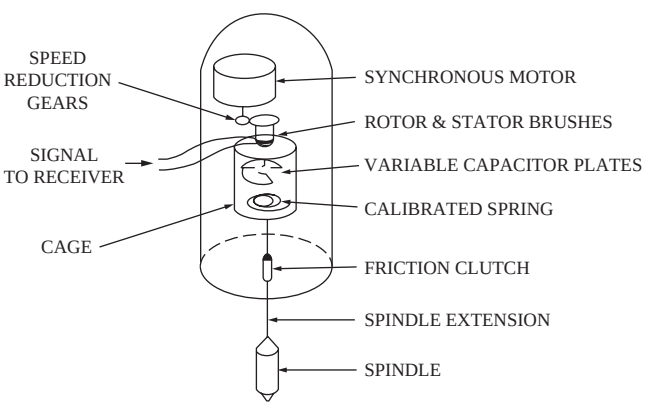

FIG. 8.64v
The operation of the rotating-spindle-type industrial viscometer.

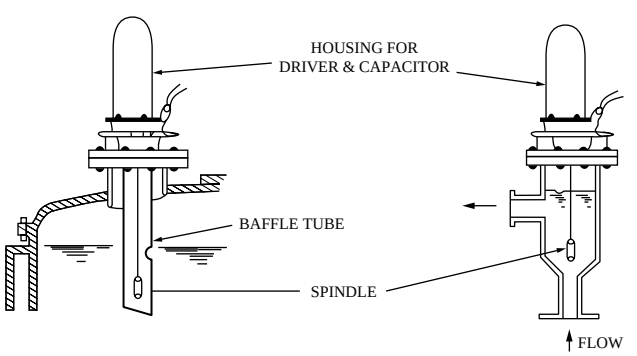

FIG. 8.64w
Tank and pipeline installation of the rotating spindle viscometer.

© 2003 by Béla Lipták

(2.4×10^{-4} m^3/s) or greater. A positive pressure differential of 3 PSI (21 kPa) should be maintained between the viscometer and the process vessel to prevent liquid or vapor penetration into the head.

The temperature of the mounting flange on which the viscometer is placed should not exceed 600°F (316°C). Above 220°F (104°C), it is necessary to use a cooling pad and place it between the flange and the viscometer. The process liquid temperature can be up to 2500°F (1370°C).

Performance The rotating-cone viscometer is not affected by normal industrial vibration. It is provided with overrange protection through a friction clutch on the spindle extension. It is simple to clean the spindle. The sample fluid should be maintained at a constant temperature, or the viscosity measurement should be compensated for temperature variations. Logarithmic temperature-compensating units are available and are matched to the viscosity–temperature relationship shown by the particular process fluid. Logarithmic compensation to within 1% error over a span of 10°F (6°C) can be provided.

A baffle tube should always be installed when this viscometer is used in an agitated tank or reactor to obtain laminar flow condition. However, if very violent agitation or bubbling conditions exist, this viscometer should not be used at all. The spindle should always be immersed, and the liquid level should be kept constant to obtain reproducible readings.

The frequency of the power supply should be checked. Wide deviations from the specified frequency will cause spindle speed changes and can introduce errors in the viscosity measurement of non-Newtonian fluids, because their apparent viscosity is related to shear rate.

The rotating-cone viscometer is an electromechanical device, so a monthly preventive maintenance and cleaning schedule is recommended. If the unit is operated continuously, the speed reduction gears will need to be replaced on a yearly basis.

Because of its simple design, ease of cleaning, and nonclogging features, this viscometer has been successfully used in monitoring solid and liquid blending processes. Rotating-cone viscometers are quite versatile in their application over wide ranges of viscosities and are equally applicable for measuring the viscosities of newtonian and non-Newtonian fluids.

Magnetically Coupled Viscometer

In the rotating-cone viscometer shown in Figure 8.64x, a magnetic coupling is provided between the electronic detector (which is at atmospheric pressure) and the rotating sensor in the measuring cell (which is operated at the process pressure). With this separation between atmospheric and pressurized areas, the requirement for purging is eliminated and, in the measuring cell, operating conditions can be up to 2850 PSIG (19.7 MPa) at 20°C or 1620 PSIG (11.2 MPa) at 300°C.

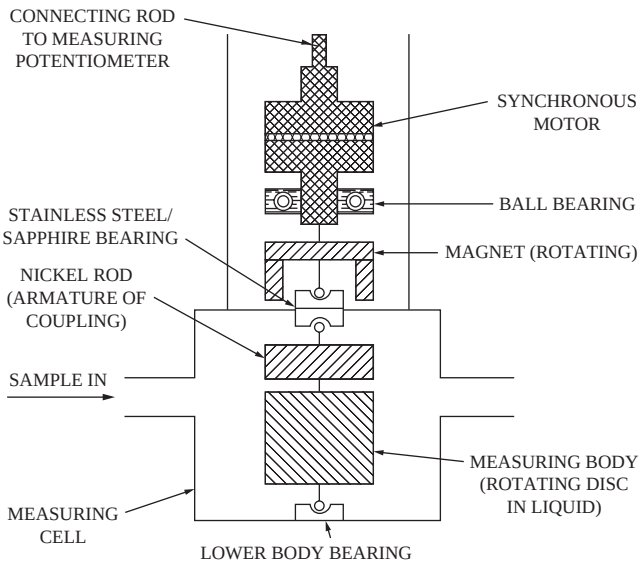

FIG. 8.64x
Magnetically coupled rotational industrial viscometer.

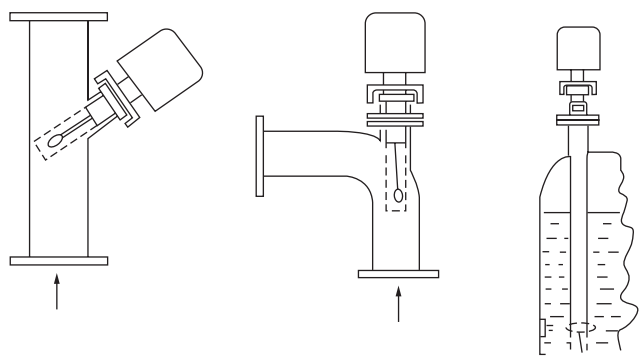

FIG. 8.64y
Pipeline and vessel installations of the gyrating element viscometer. (Courtesy of C. W. Brabender Instruments Inc.)

The magnetically coupled viscometer should not be used to measure fluids that contain fiber, ferrite, or abrasive materials, because they interfere with the operation of the magnetic coupling or can damage the stainless steel–sapphire bearings.

Gyrating-Element Viscometer

The viscometer illustrated in Figure 8.64y differs from the previously described designs in that its element gyrates instead of rotates. This gyrating motion is the result of the drive shaft not being straight. The drive and the torque-sensing mechanism are isolated from the process side by stainless steel bellows that are capable of operating at up to 1000 PSIG (70 barg) operating pressures and 572°F (300°C) operating temperatures.

The drive motor speed is adjustable from 15 to 120 r/min, and the unit can detect viscosities between 10 and 10 million cP (the overall range is subdivided into several working ranges).

© 2003 by Béla Lipták

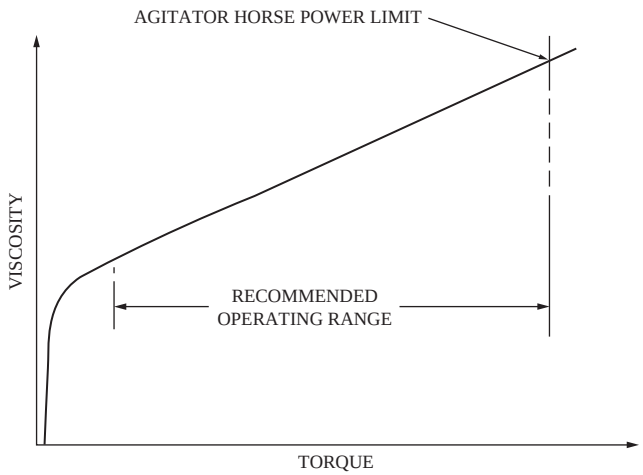

FIG. 8.64z
Relationship between viscosity and torque in agitator power viscometer.

For pipeline installation, the minimum pipe size is 4 in. (100 mm).

Agitator Power

This type of instrument is widely used in the paper industry to control and measure the consistency of paper pulp slurries. In this viscometer, instead of measuring the torque exerted on a rotating cone, a transmitting wattmeter is used to detect the torque exerted on the process agitator. It measures the power consumed as the agitator is being driven in a mixing tank.

As shown in Figure 8.64z, because most of the industrial agitator motors are oversized, the torque response of this sensor is poor at low viscosities. The size of the motor and impeller should be selected so that the agitator will operate in a region where the viscosity-vs.-torque relationship is linear. The motor, reducer, bearing assembly, and pressure seal are all part of the viscometer, and any change in characteristics of these components would also affect the power consumption of the motor and, in turn, the viscosity reading.

This instrument is simple and easy to install, but it has low sensitivity and a low ratio between agitator power consumption and changes in viscosity of the fluid. Many different impeller designs are available to improve the sensitivity and rangeability. Because it is a self-cleaning and agitating design, it is ideal for materials that have a tendency to cling to slow-moving parts or to settle out from suspensions.

This type of instrument should not be used with fluids that are thixotropic or rheopectic (materials whose viscosity changes with duration of agitation or shear). However, it can be used in in-line applications for all non-Newtonian fluids, because the process fluid is continuously replaced by a fresh sample at a reasonably constant flow rate.

The accuracy and sensitivity of this method of viscosity detection are both poor, but its repeatability is reasonable at about ±1% of full scale.

Double-Cylinder Viscometer

Figure 8.64aa illustrates the double-cylinder type of in-line viscometer. It consists of a stationary outer and a rotating inner cylinder. This viscometer provides self-cleaning operation and fast measurement.

The process fluid is drawn into the measuring chamber through the apertures in the stationary outer cylinder by the propeller. The propeller pumps the process fluid downward into the measurement zone, where the sensor cylinder is rotated inside the stationary external cylinder. The measuring zone is the clearance space between the two cylinders. The torque required to rotate the measuring cylinder is proportional to viscosity.

The self-cleaning nature of this viscometer is partially created by the lip on the upper edge of the measuring cylinder, which serves to prevent the entry of larger particles into the measurement zone. In addition, the solids that enter the measurement zone can also leave through two slots that are provided in the outer cylinder. Large particles will not enter the measuring zone at all but will leave through the outlet holes that are provided on the top of the rotating cylinder.

Viscometers are available for in-line installation in pipe sizes from 3 to 10 in. (76 to 250 mm) in diameter. The viscometer can detect viscosities from 5 to 350 cP at pressures up to 145 PSIG (10 barg) and temperatures up to 300°F (150°C). The wetted parts can be made out of stainless steel or Hastelloy C with Viton, EPDM, or silicone O-ring seals. The mechanical seal can be cooled and lubricated by water.

VIBRATING-REED VISCOMETER

The vibrating-reed viscometer is designed for continuous measurement. It can be installed directly into the process vessels or pipelines. As illustrated in Figure 8.64bb, it consists of a frequency generator, a vibrating spring rod, a probe, and a pickup unit to complete a measurement loop through the process material.

The drive coil is excited at a frequency of 120 Hz from a 60-Hz input frequency. This produces a pulsating magnetic field that causes the drive armature to vibrate at the same frequency. The mechanical vibration of the drive armature is transmitted to the probe through an all-welded, pressure-sealed node that is located where the amplitude of vibration is zero.

The principle of operation is based on the fact that the amplitude of probe vibration depends on the viscosity of the process media. The resistance to the shearing action caused by the probe's vibration increases with an increase in the viscosity of the process media. The amplitude of probe vibration is sent through a second welded node point by the upper spring rod to the pickup end of the detector.

The pickup end is similar to that of the driver end, except that a permanent magnet is used to induce a 120-Hz AC voltage in the pickup coil from the vibration of the pickup armature.

© 2003 by Béla Lipták

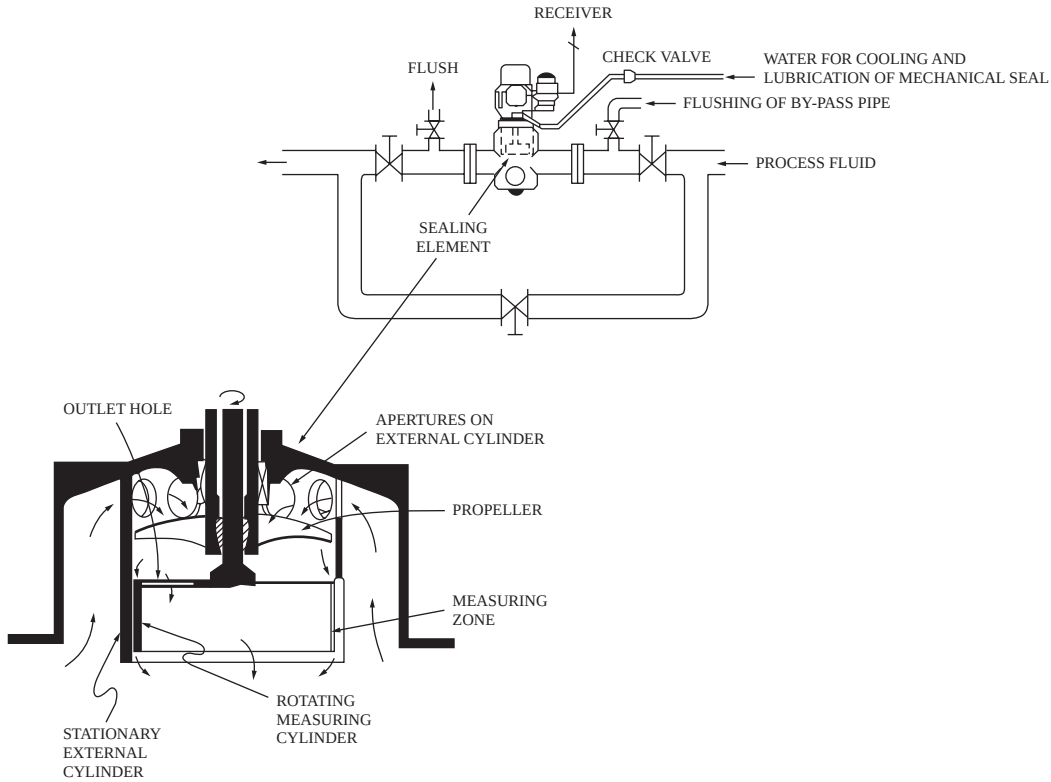

FIG. 8.64aa
Self-cleaning cylinder viscometer. (Courtesy of BIG Inc.)

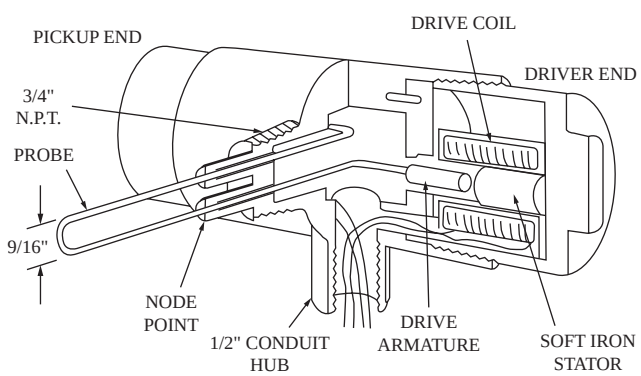

FIG. 8.64bb
Vibrating-reed viscometer.

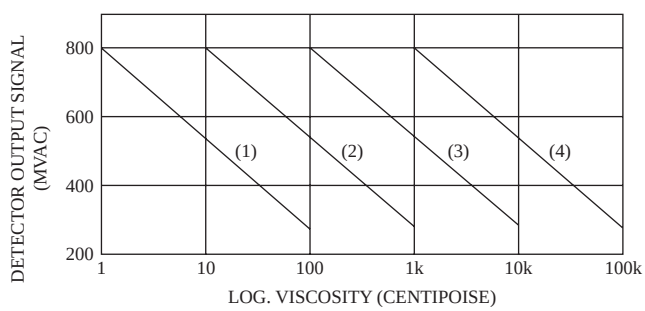

FIG. 8.64cc
The response curves of four vibrating-reed viscometers.

The magnitude of the voltage generated in the pickup coil is a measure of the process viscosity, because it is proportional to the pickup armature vibration. The 120-Hz output signal from the detector is converted into a 0 to 10 mV DC signal to indicate, record, or control the viscosity of newtonian or non-Newtonian fluids.

Performance Inaccuracy of the instrument is about ±1% of full scale, and reproducibility is a little better. There are five different detector units to cover the viscosity ranges from 10^{-1} to 10^{5} cP (10^{-4} to 10^{2} Pa·s) at relatively low shear rate. Typical response curves of four different detector units are shown in Figure 8.64cc.

Because the viscosity of fluids depends on their temperature and pressure, it is mandatory to maintain the process pressure and temperature constant. As shown in Figure 8.64dd, if the fluid temperature must be allowed to fluctuate, temperature compensation is required. Before ordering a viscometer for in-process use, the fluid's viscosity must be measured as a function of temperature so that this characteristic curve can be used in the converter.

For accurate measurements, *laminar* flow conditions should be maintained. Therefore, the installation of this type of viscometer directly in an agitated vessel is not recommended.

© 2003 by Béla Lipták

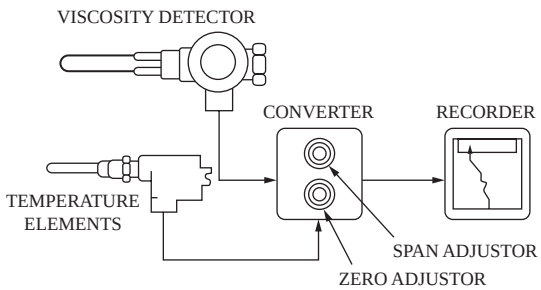

FIG. 8.64dd
Complete loop diagram of a temperature-compensated vibrating-reed-type viscosity recorder.

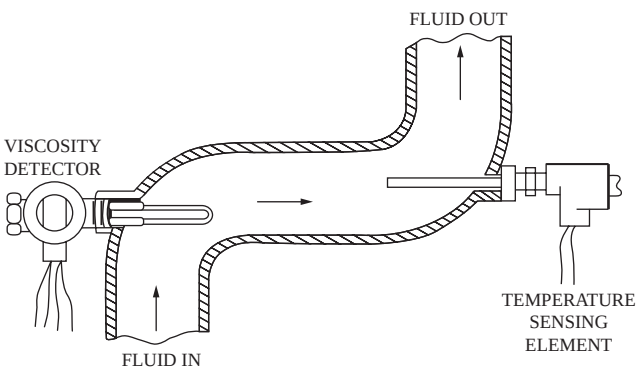

FIG. 8.64ee
Installation recommendation for an in-line vibrating-reed viscometer.

If it must done, the viscosity reading should be taken only when the agitator is off.

Installation and Calibration Complete immersion of the probe in the process fluid is essential. Figure 8.64ee illustrates the recommended pipeline installation of this viscometer probe in vertical upward flow. Complete immersion of the probe is required at all times. To improve the accuracy of measurement, the recommended viscometer installation is in a temperature, pressure, and flow rate controlled sample loop.

The amplitude of vibration will change with condition and age of the probe. It is good practice to calibrate the instrument regularly when it is used for critical operations. Material build-up on the probe can occur if the process material has a tendency to adhere or if it contains long fibrous materials. Slight or loose buildup can be removed by periodic in-line purging. If the buildup can be severe, this type of viscometer should not be used.

Because the detector unit transmits a low-voltage signal, the use of shielded wires is recommended. The wires should be grounded at both ends to minimize noise pickup. Supply voltage variations between 105 and 125 V will have no harmful effects. The *frequency of supply power should be checked*, because the probe vibration frequency is controlled by the line frequency. If the vessel or pipeline vibrates, and this vibration frequency is close to 120 Hz, it can interfere with the reliability of viscosity measurement by this sensor.

CORIOLIS MASS FLOW METER

Measuring Tube Torsional Movement

Coriolis mass flow meters currently are well established in process industry applications and have extremely good functionality and performance. They have proven multivariable measurement capabilities, including mass flow, density, and temperature, that can be transmitted via various methods such as 4 to 20 mA signals, pulse, and various fieldbus links. Ease of installation and maintenance are also well established. Further details on these flow meters are available in another section of this volume.

Very recently (at the time of the writing of this volume), a new development was announced by a manufacturer of Coriolis meters. Viscosity can now be added to the list of multivariable measurements. Viscosity is obviously a key process variable, and to be able to acquire it via an existing proven technique is significant. Four significant process variables can be measured simultaneously with proven in-line technology.

The measurement principle for this viscosity process variable is the torsional movement of the measuring tube. For an optimal balance, and for isolation from external influences, a pendulum is mounted on the single measuring tube that causes an additional torsional movement on it, as shown in Figures 8.64ff and 8.64gg. Based on this technique, torsional movements are created in addition to the lateral oscillation movements of the measuring tube.

A velocity profile is created on the tube cross section by the torsional and lateral oscillation movements. This is shown in Figure 8.64hh. Viscosity measurement is based on the shape of the velocity profile, shear forces, and corresponding

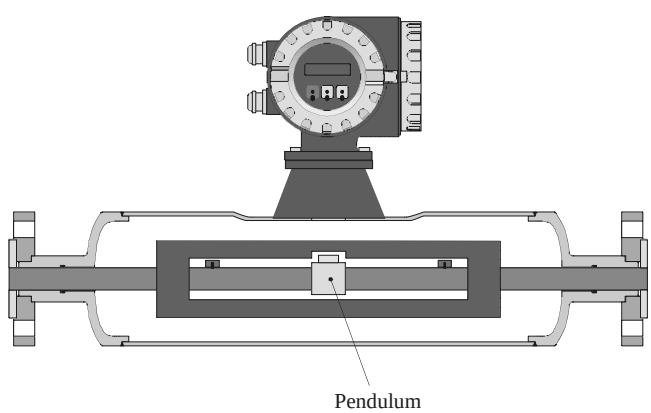

FIG. 8.64ff
Mass flowmeter/measuring tube torsional movement type (pendulum on the measuring tube balancing the system for immunity to external forces). (Courtesy of Endress + Hauser.)

© 2003 by Béla Lipták

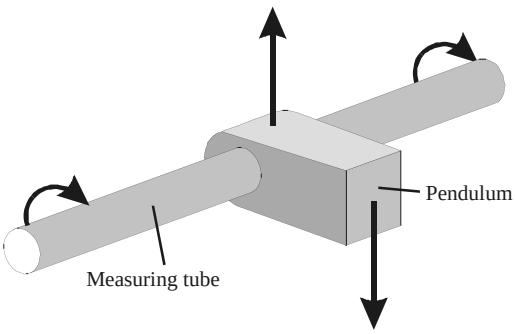

FIG. 8.64gg
Mass flowmeter/measuring tube torsional movement type (oscillation movement of the measuring tube and pendulum). (Courtesy of Endress + Hauser.)

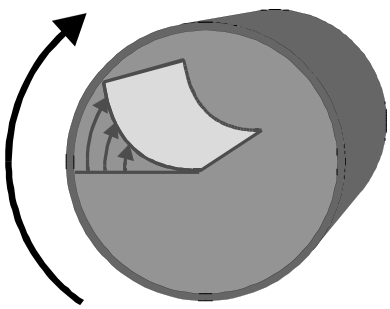

FIG. 8.64hh
Mass flowmeter/measuring tube torsional movement type (cross section of the tube, showing the velocity profile of the fluid). (Courtesy of Endress + Hauser.)

shear rates developed in the fluid. This is similar to the rotational element viscometers in which shear rates are related to viscosity.

The shear forces dampen the tube oscillation, so a larger drive force is required to maintain tube oscillation. Thus, viscosity can be determined by measuring the required power or excitation current for tube oscillation and torsional movement.

Repeatability and measurement inaccuracy are both ±5% of actual reading or ±0·5 cP, whichever is greater. The in-line meter is 2 in. in diameter and is provided with 600-lb flanges. The output signal can be 4 to 20 mA or digital. The speed of response of the meter is high and therefore suited for closed-loop process control applications.

CONCLUSIONS

Each viscometer exposes the process fluid to a different shear rate, so, when the process fluid is non-Newtonian, the apparent viscosities will vary with shear rate, and the readings will vary with the viscometer used.

Some viscometer designs provide intermittent readings (falling-ball or falling-piston, oscillating-blade, etc.), and others are continuous. In closed-loop control, the continuous ones are much preferred. Some viscometers require the taking of a sample from the process (capillary, float, rotational), but others can be inserted directly into the process pipe or vessel. Because sampling systems usually increase installation and maintenance costs, and because sampling also adds dead time (transportation lag) to the measurement, the in-line designs are generally preferred.

Viscous process fluids usually also contain solids. For this reason, the designs that cannot tolerate the presence of solids (capillary, float) are less desirable, and the self-cleaning designs (oscillating, vibrational, double-cylinder) are preferred.

In some process applications, the operating viscosity can change over a wide range. If that is the case, measurement error can be reduced by using viscometer designs that are capable of automatic range changing, e.g., the torsional oscillation design.

The torque or shear force measured by most viscometers will also vary with changes in temperature and density. Therefore, viscometer designs that provide automatic temperature compensation and allow for manual or automatic density correction are likely to provide more accurate readings.

A particularly appealing new approach involves using existing Coriolis mass flow technology and extending the principles and techniques to extract process viscosity. This yields a proven industrial in-line continuous measurement technique with three multivariable measurements that can spin out an additional key process variable, viscosity. Installation is easy, and no additional independent complex sensors are required.

In addition, one must also be concerned with the viscosity range, design pressure, design temperature, and required precision of the measurement. Table 8.64a provides a summary of the design features of the viscometers discussed in this section.

Bibliography

Abnett, A. and Garvey, R., New orbital ball type of viscometer, *Integrated Monitoring, Diagnostics, and Failure Prevention—Proc. Joint Conference,* Mobile, AL, NTIS Accession Number AD-P010 179/0/XAB, April 1996.

ASTM Standard, ASTM-D-445–97/XAB, Kinematic Viscosity of Transparent and Opaque Liquids (the Calculation of Dynamic Viscosity), September 1998.

Bandrup, J., Immergut, E. H., Grulke, E. A., and Bloch, D., Eds., *Polymer Handbook,* 4th ed., John Wiley & Sons, New York, 1999.

Basker, V. R., Dutka, A. P., Crisalle, O. D., and Fricke, A.L., Evaluation of an online torsional oscillatory viscometer for kraft black liquor, *Paperi ja Puu/Pulp and Timber,* 82(7), October 2000.

Batra, R. L., *Falling Cylinder Viscometer for Casson Fluids,* Jamshedpur Regional Institute of Technology (India), 1981.

Black, S. S., Automated differential viscometry leads to 300 percent increase in analysis rate, *Sci. Comput. Autom.,* 5, April 1996.

Bullon, H. H., Shear Rate Determination in a Concentric Cylinder Viscometer, Defence Science and Technology Organization, NTIS accession number AD-A315 366/5, July 1996.

Carr, K. R., Rotational Viscometer for High-Pressure, High-Temperature Fluids, Patent Application 6–501–313, June 6, 1983.

Chang, V., Zambrano, A., Mena, M., and Millan, A., A sensor for online measurement of the viscosity of non-Newtonian fluids using a neural network approach, *Sensors and Actuators A (Physical),* A47(1–3), March–April 1995.

© 2003 by Béla Lipták

Chu, B. and Wang, J., Magnet enhanced optical falling needle/sphere rheometer, *Rev. Sci. Instrum.,* 63(4), April 1992.

Cox, C. J., Park, M. J., and Wilson, C. A., Use of the capillary tube viscometer for the determination of the flow behavior of tall oil soap, *Trans. New Zealand Inst. Prof. Eng.,* March 1983.

Cutrone, L., Use of the Brookfield viscometer to predict rheological performance of coatings, *J. Coatings Tech.,* January 1984.

Dutka, A. P., Crisalle, O. D., Fricke, A. L., Kalotay, P., Evaluation of a capillary-coriolis instrument for online viscosity and density measurements of kraft black liquor, *Proc. TAPPI Process Control, Electrical and Instrumentation Conf.* (ISA), March 1997.

Ferry, J. D., Oscillation viscometry—effects of shear rate and frequency, *Meas. Control,* September–October 1977.

Fitzgerald, J. V., Matusik, F. J., and Walsh, T. M., Inline viscometry, *Meas. Control,* December 1987.

Fournier-Villalon, P., Bertrand, J., and Couderc, J. P., Using a Brookfield viscometer for determining rheological properties of newtonian, plastic and pseudoplastic media, *Entropie,* 20(120), 1984.

Frisman, M. L., Rotation viscometer for readily unmixing suspensions, *Indust. Lab.* (USSR), October 1984.

Galvin, G. D., Hultin, J. F., and Jones, B., Development of a High-Pressure, High-Shear Rate Capillary Viscometer, *J. Non-Newtonian Fluid Mechanics,* January 1981.

Gillis, K. A., Mehl, J. B., and Moldover, M. R., Greenspan Acoustic Viscometer for Gases, *Rev. Sci. Inst.,* 67(5), NTIS accession number PB96–204417, May 1996.

Gimera, M., Software Quality Assurance Plan for Viscometer, Department of Energy Report, NTIS accession number DE95002145, October 1994.

Grupp, J., Torsion Viscometer for Liquid Crystals, *Rev. Sci. Inst.,* June 1983.

Helle, H., Valimaki, H., and Lekkala, J., Comparing a 10 MHz thickness-shear mode quartz resonator with a commercial process viscometer in monitoring resol manufacturing process, *Sensors and Actuators B (Chemical),* B81(2–3), January 2002.

Jethra, R., Viscosity measurement, *ISA Trans.,* 33(3), September 1994.

Kalotay, P., Online viscosity measurement using coriolis mass flowmeters, *Flow Meas. Instrum.,* 5(4), October 1994.

Khachatryan, G. M. et al., Device for the automatic continuous measurement of the dynamic viscosity of polymers, *Fibre Chem.* (UK), May–June 1983.

Kurano, Y., Accurate measurement of viscosity under high pressure with a falling-sphere viscometer, *High Temp.—High Press.,* 26(1), 1994.

Ohene, F., Livingston, C., Matthews, C., and Rhone, Y., Study of Pressure Drop in a Capillary Tube Viscometer for a Two-Phase Flow, Department of Energy Report #DOE/PC/91292-T17, NTIS accession number DE96000151 1995.

Oppliger, H. R., Matusik, F. J., and Fitzgerald, J. V., New technique accurately measures low viscosity on-line, *Control Eng.,* July 1985.

Roger, U., Hessenkemper, H., and Roth, P., Glass Conditioning by Viscosity Control, *Glass Sci. Tech.,* 69(8), August 1996.

Sawhney, I. K., et al., Development of capillary tube viscometer for measuring flow properties of khoa, *J. Institute Eng.* (India), August 1984.

Sexton, W. C., Rotating spindle viscometer, International and 42nd Annual Symposium and Exposition on Scientific Glassblowing, NTIS accession number DE970610182/XAB, June 1997.

Sheen, S. H., Chien, H. T., and Raptis, A. C., In-Line Ultrasonic Viscometer, 1994 Review of Progress in Quantitative Nondestructive Evaluation Conference, Sponsored by Department of Energy, NTIS accession number DE95002982, October 1994.

Smith, R. E., Brookfield viscometers for determination of low-shear viscosity and leveling behavior, *J. Coatings Tech.,* January 1984.

Villemaire, J. P. and Agassant, J. F., Apparent viscosity measurements using a capillary viscometer, *Polymer Process Eng.,* 1(3), 1983–84.

Viscometers, *Meas. Control,* June 1993.

Vrentas, J. S., Mechanical energy balances for a capillary viscometer, *J. Non-Newtonian Fluid Mech.,* March 1983.

Walsh, T. M., Continuous viscosity control improves quality, *Adhesives Age,* December 1989.

Webber, P. J. and Savage, J. A., Measurement of the viscosity of chalcogenide glasses by parallel plate technique, *J. Mater. Sci.,* March 1981.

Wunderlich, T. and Brunn, P. O., Ultrasound pulse doppler method as a viscometer for process monitoring, *Flow Meas. and Instrum.,* 10(4), December, 1999.

Zhang, Z. and Reddy, R. G., Viscosities of lead silicate slags, *Minerals Metall. Process.,* 19(1), February 2002.

© 2003 by Béla Lipták

8.65 Water Quality Monitoring

C. P. BLAKELEY (1974) **G. L. COMBS** (1995) **B. G. LIPTÁK** (2003)

Measured Water Quality Parameters:	Ammonia, biochemical oxygen demand (BOD), chemical oxygen demand (COD), chlorine, color, conductivity, dissolved oxygen (DO), fluoride, mercury, nitrates, odor, oil, ORP, ozone, pH, phosphorus, temperature, total carbon (TC), total inorganic carbon (TIC), total organic carbon (TOC), total oxygen demand (TOD), turbidity, volatile organic compounds (VOC)
Physical Variables:	Air temperature, rainfall, river flow or stage (level), sunlight, wind direction and speed
Cost:	Costs vary widely, depending on system requirements and components to be measured. For example, a single-parameter measuring system could cost as little as $3000, whereas a completely integrated monitoring system capable of simultaneous measurement of multiple volatile organic components at the ppb level and equipped with a full complement of user-specified data transmission options may cost as much as $75,000. Sample system, installation, and the cost of building a suitable shelter can double the total cost. For the costs of individual sensors, refer to the individual sections in this chapter.
Partial List of Suppliers:	ABB Inc. Analytical Products (www.abb.com/analytical) Automated Environmental Systems (www.automated1.som) Bran and Luebbe Inc. (www.branluebbe.com) Brinkmann Instruments Inc. (www.brinkmann.com) Chrompack International B.V. (www.chrompack.com) Dionex Corp. (www.dionex.com) Environmental Analytical Systems Inc. (www.enviro-analytical.com) Foxboro-Invensys (www.foxboro.com) Hach Co. (www.hach.com) Honeywell (www.acs.honeywell.com) Hydrolab Corp. (www.hydrolab.com) Rosemount Analytical Inc. (www.rosemount.com/support) Siemens Energy and Automation Inc. (www.sea.siemens.com) Skalar Analytical BV (www.skalar.com) Teledyne Analytical Instruments (www.teledyne-ai.com) Tytronics Inc. (www.tytronics.com) Waltron Ltd. (www.waltronltd.com)

INTRODUCTION

Water quality monitoring systems provide a means of measuring the condition of the water. These systems range from single-parameter measurements to complex systems integrating multiple sensors with data manipulation and recording capabilities and, in many cases, with means for remote communications and data transfer. The rapid growth of the human population and of industry has focused attention on the quality and condition of our rivers, lakes, and drinking water supplies. Stringent laws have been passed to limit the concentration of elements that are hazardous to health as well as to provide a mechanism to monitor the general quality of the environment.

Categories of Monitors

Water quality monitors can be categorized by purpose as described below.

Monitoring for General Use These systems are usually permanent installations used primarily for data collection for public information, notification, and similar purposes.

© 2003 by Béla Lipták

Regulatory Compliance Monitoring The purpose of these systems is to confirm compliance with a particular regulation or water quality standard that was imposed by a regulating agency, either on the local, state, or federal level. These packages are characterized by the stringent requirements that are implemented in standardizing equipment and techniques as well as implementing formal procedures for operation, calibration, and quality assurance monitoring.

Industrial Monitoring These systems serve a wide range of uses, including regulatory compliance monitoring, incoming water quality monitoring, aqueous process reaction monitoring, process leak detection monitoring, and biological/aeration pond monitoring. These systems are often typified by the use of on-line instrumentation that, in some cases, is suitable for operation in hazardous plant locations in addition to offering continuous operation with minimal attention.

MONITORING SYSTEM COMPONENTS

Regulatory agencies have conducted numerous studies to evaluate and determine the efficiency of a variety of types of systems and technologies. These evaluations have resulted in increasing the required quality and the number of suppliers and monitoring techniques that are available. The reliability of such systems has also improved over the years, as has their flexibility, which was required to meet unique demands of individual installations.

A water quality monitoring system usually consists of a sampling system, a group of sensors, and a data transmission/logging section. For the package to function properly, these components must be fully integrated and coordinated in their automatic operation.

Sampling Systems

A key element in any continuous analysis is the sample transport system. It is essential to provide a reliable and reproducible means of bringing a sample to a sensor or analyzer.

Figure 8.65a depicts a method of placing the sensor directly into the monitored water body for continuous sensing. This technique is used to measure variables such as pH, conductivity, dissolved oxygen, and water temperature. The submersible assembly is anchored directly in the stream and is ideal for monitoring water quality parameters in protected areas.

It is possible in some cases to place the sensor directly into the water, but most installations require a water sample to be transferred to a permanently installed analyzer. Figure 8.65b depicts a permanent water quality monitoring installation. The sampling system in such an installation might include filters, pumps, gauges, valves, and transport lines.

Duckbill Samplers This sampler should be considered when samples are to be collected at remote locations, from below tanks, sewers, channels, sumps, lakes, or rivers. As shown in

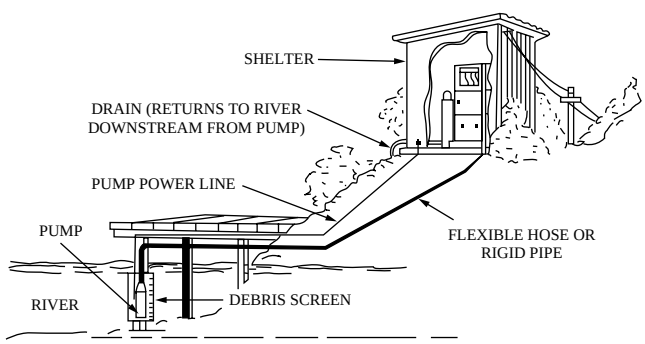

FIG. 8.65b
Permanent installation of a water quality monitoring analyzer package inside an analyzer shelter.

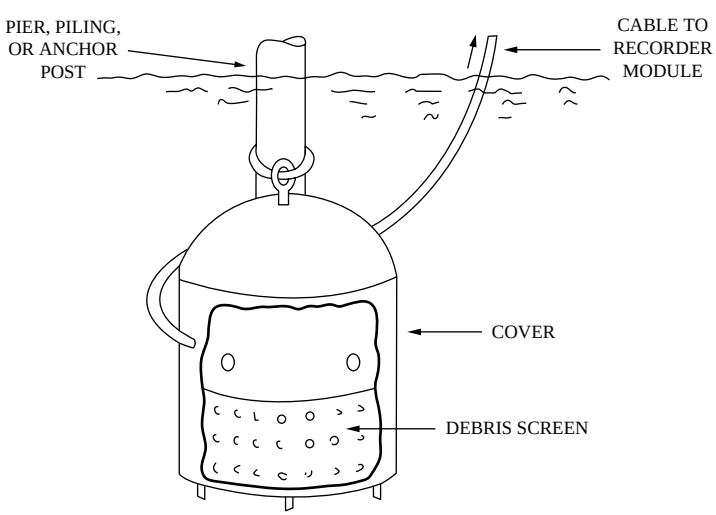

FIG. 8.65a
Submersible sensor housing that can accommodate one or two individual local sensors (pH, conductivity, temperature, etc.).

© 2003 by Béla Lipták

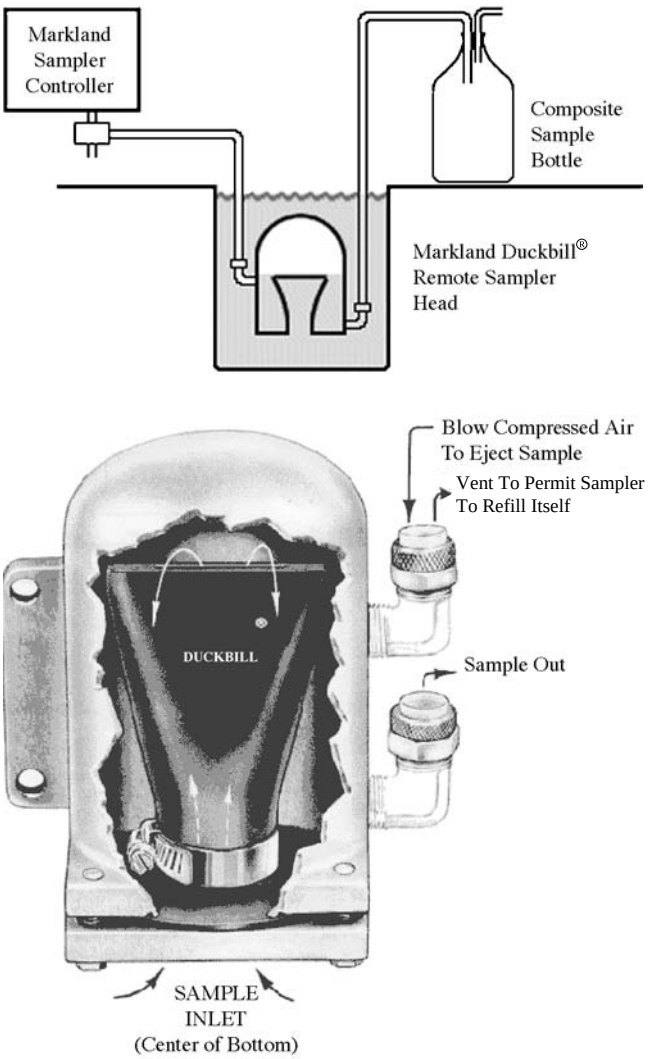

FIG. 8.65c
Remote sampler head for composite sample collection at remote locations. (Courtesy of Markland Specialty Engineering Ltd.)

Figure 8.65c, this device has no moving mechanical components—only a rubber (EPT, Buna-N®, or Viton®) bucket-shaped "duckbill" inside a housing made of PVC, aluminum, or stainless steel. This rubber insert closes around fibers and particulate matter without jamming and is operated by compressed air. An automatic controller is provided with which the user can adjust the frequency at which samples are taken into a composite sample collection bottle.

The sample enters through the bottom of the sampler by gravity. The sampler is installed below the monitored water or process liquid (or sludge) level, and it traps some air at the top of the chamber as it fills. When a sample is required, compressed air is introduced, which closes the duckbill inlet and discharges the sample through the bottom of the chamber. When a new sample is to be drawn into the sample chamber, the compressed air is vented, and a new fill cycle is initiated.

Sample Transport In all applications, care should be taken to ensure that a representative sample is sent to the analyzer. Sampling systems in general, and the components of liquid sampling systems, are discussed in Section 8.2. Figure 8.65d illustrates a typical sample transport system.

Prefiltering may be necessary when the presence of particulate or algae might interfere with the operation of pumps or valves. Screens, Y-type strainers, or cyclone-type filters may be appropriate in other applications. However, for some measurements, filtering of a sample may change the concentration to be measured or change some other characteristics of the sample. Therefore, the effect on the integrity of the sample should be considered before selecting the method of filtering.

Pumps can be submersible. The exact choice of pump should consider the type of analysis being performed. For example, dissolved oxygen and volatile organic compound (VOC) analyses may limit the choice of pumps, because their concentrations can be altered by changing pressures or by any cavitation that occurs in the pump. In industrial applications, the pump must be rated for the correct hazardous location. Care should also be taken to ensure that the pump can

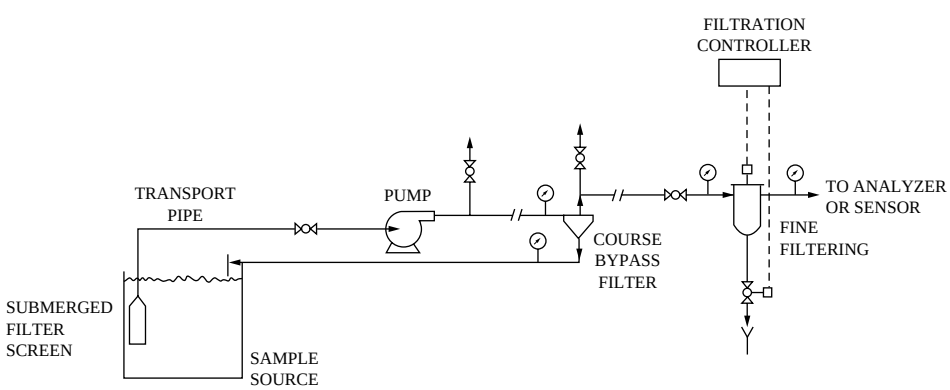

FIG. 8.65d
Schematic of a typical sample transport system.

© 2003 by Béla Lipták

TABLE 8.65e
Partial List of Measured Components in Water

	Typical Instrument Measuring Range	*Analysis Method*
Acidity	1.0–3.0 pH	Titration
Alkalinity	0–300 ppm	Titration
Aluminum	0–50 ppb	Colorimetry
Ammonia	0–10 ppm	Colorimetry, ISE, chromatography
Boron fluoride	0–500 ppm	ISE
Bromide	0–2.0 ppm	ISE
Cadmium	0–20 ppm	ISE, chromatography
Calcium	0–300 ppm	Titration, ISE
Chloride	0.1–200 ppm	ISE, colorimetry
Chromate	0–100 ppb	Colorimetry
Copper	0–20 ppb	Colorimetry, ISE, chromatography
Cyanide	0–100 ppb	Colorimetry, titration, ISE, chromatography
Fluoride	0–2.0 ppm	ISE
Hardness (Ca + Mg)	0–2.5 ppm	Titration
Hydrazine	0–50 ppb	Colorimetry
Hydrogen sulfide/sulfide	0–500 ppb	Colorimetry/ISE, chromatography
Iron	0–20 ppb	Colorimetry
Lead	0–1 ppm	ISE, chromatography
Manganese	0–200 pm	Colorimetry
Nitrate/nitrite	0–1 ppm	Colorimetry
Phenols	0–5 ppm	Colorimetry
Phosphate	0–1 ppm	Colorimetry
Silica	0–10 ppb	Colorimetry
Sodium	0–10 ppb	ISE
Urea	0–100 ppm	Colorimetry

ISE = Ion-selective electrode

handle particulate loading that might be present in the sample on a continuous basis or during excessive runoff (as, for example, might occur during rain).

Transport lines may require heat tracing or other forms of heating to protect the sample from freezing during cold seasons. In addition, the presence of corrosive materials such as chlorides, strong acids, and bases in the sample may also limit the materials of construction that can be used in the sample transport system.

SENSORS AND ANALYZERS

A water quality analyzer may be as simple as a probe inserted into the water and connected to a conveniently located recorder or as complex as a data collection system with multiple sensors distributed in several locations and connected to a centralized data recording and compiling system.

Water Quality Parameters

Table 8.65e lists a number of components that are typically measured in a water sample, plus other water quality characteristics, along with typical concentration ranges and their available methods of analysis. In some instances, there are several suitable methods of analysis. Trace concentrations of components are monitored in drinking, industrial, and ultra-pure water. Other applications include the measurement of specific pollutants in municipal and industrial wastewater streams.

Ion-Selective Electrodes

As shown in Table 8.65f, a wide variety of electrode designs are available for measuring the presence of different ions (see Section 8.28 for more details). These electrodes develop an electrical potential reflecting the ionic activity in the process stream. It is important to realize that the activity, not the concentration, of an ion is actually being measured. In dilute solutions, however, the activity may approach the concentration.

© 2003 by Béla Lipták

TABLE 8.65f
Specific Ion Electrodes

		Interfering Ions																							
		Anions													*Cations*										
Ion	*Electrode pH Range*	ClO^-	I^-	ClO_3^-	Br^-	$S^=$	CN^-	$S_2O_3^-$	NH_3	OH^-	Cl^-	NO_3^-	$HPO_4^=$	HCO_3^-	Cu^{++}	Mg^{++}	Ba^{++}	H^+	Fe^{++}	Ni^{++}	Zn^{++}	Na^+	K^+	Ca^{++}	Sr^{++}	*Electrode Type*
Chloride	0–14		x		x	x	x	x	x																Solid state
Sulfide	0–14		None													None									Solid state
Nitrate	2–12	x	x	x	x																				Liquid membrane
Fluoride	1–8.5		x		x					x	x	x	x	x											Solid state
Divalent cation	7–8															Sensitive to most divalent actions									Liquid membrane
Calcium	5.5–11.0															x	x								Liquid membrane
$Copper^{++}$	2.5															x	x	x	x	x	x	x	x	x	Liquid membrane
Lead	4–7														x					x	x	x		x		Liquid membrane
Cyanide	0–14		x		x					x	x	x	x	x											Solid state
Hardness	5.5–11														x		x		x	x	x	x			Liquid membrane

© 2003 by Béla Lipták

Conductivity Specific conductance or conductivity provides an estimate of the total dissolved ionized solids in water (Section 8.17). It is a nonspecific method of measurement, as it is sensitive to all ions in the sample. Changes in the conductivity of the water are usually indicative of a discharge or runoff of strong acids, bases, or other highly ionizable material. Instruments are typically capable of measuring from 0 to 1000 mS/cm. Conductance of water can vary widely between various bodies and is highly temperature dependent.

pH Measurement pH is a measurement of the hydrogen ion activity in a sample (Section 8.48). It is defined as the negative logarithm of the concentration of the active hydrogen ions, expressed in gram moles per liter. Typical pH values range from zero (high acidity) to 14 (high alkalinity).

A pH of 7 indicates a neutral solution. Rapid changes in pH can signal a discharge or spill, because the pH of open bodies of water would normally change only gradually.

Oxidation-Reduction Potential Oxidation-reduction potential (ORP) is a measurement of the oxidizing or reducing materials in the water (Section 8.41). It is an electrochemical measurement of the potential developed by these materials when present in the water. Under normal circumstances, a body of water will have both oxidizing and reducing components in nearly equal concentrations. A sudden discharge can therefore be detected by detecting the changes in ORP. As are most others, ORP measurement is temperature dependent.

Oxygen Demand Detectors

Biochemical oxygen demand (BOD), chemical oxygen demand (COD), and total oxygen demand (TOD) analyzers (Section 8.7) consist of a sampling and conditioning section that is followed by the analyzer itself. Analysis typically involves quantifying the amount of oxygen uptake by the sample.

The dissolved oxygen concentration of the water is a function of the solubility of oxygen at a particular temperature (Table 8.65g) and barometric pressure (Table 8.65h). Dissolved oxygen (DO) content usually describes the condition of the receiving waters (Section 8.43), whereas BOD, COD, and TOD usually describe the pollutant concentration in the discharged wastewaters.

Biochemical oxygen demand measurements provide information on the amount of oxygen required for the biochemical degradation of the organic matter in the water. Biochemical oxygen demand measurement is rather slow, because it requires a minimum a five-day incubation period for analysis.

Chemical oxygen demand measures the quantity of oxygen that organics and certain oxidizable inorganic compounds that are present in the water will consume. In COD measurements, the oxygen is obtained from the reduction of a dichromate solution. The amount of oxygen required to oxidize the organics in the sample provides information on the COD concentrations in the water.

TABLE 8.65g

Water Solubility of Oxygen. Dissolved Oxygen Concentration in Water, mg per liter (as a Function of Chloride Ion Concentration and Temperature)

	Chloride Ion Concentration in Water, mg per liter					*Difference per 100 mg per liter Chloride*
Temp. °C	*0*	*5000*	*10,000*	*15,000*	*20,000*	
0	14.6	13.8	13.0	12.1	11.3	0.017
1	14.2	13.4	12.6	11.8	11.0	0.016
2	13.8	13.1	12.3	11.5	10.8	0.015
3	13.5	12.7	12.0	11.2	10.5	0.015
4	13.1	12.4	11.7	11.0	10.3	0.014
5	12.8	12.1	11.4	10.7	10.0	0.014
6	12.5	11.8	11.1	10.5	9.8	0.014
7	12.2	11.5	10.9	10.2	9.6	0.013
8	11.9	11.2	10.6	10.0	9.4	0.013
9	11.6	11.0	10.4	9.8	9.2	0.012
10	11.3	10.7	10.1	9.6	9.0	0.012
11	11.1	10.5	9.9	9.4	8.8	0.011
12	10.8	10.3	9.7	9.2	8.6	0.011
13	10.6	10.1	9.5	9.0	8.5	0.011
14	10.4	9.9	9.3	8.8	8.3	0.010
15	10.2	9.7	9.1	8.6	8.1	0.010
16	10.0	9.5	9.0	8.5	8.0	0.010
17	9.7	9.3	8.8	8.3	7.8	0.010
18	9.5	9.1	8.6	8.2	7.7	0.009
19	9.4	8.9	8.5	8.0	7.6	0.009
2	13.8	13.1	12.3	11.5	10.8	0.015
20	9.2	8.7	8.3	7.9	7.4	0.009
21	9.0	8.6	8.1	7.7	7.3	0.009
22	8.8	8.4	8.0	7.6	7.1	0.008
23	8.7	8.3	7.9	7.4	7.0	0.008
24	8.5	8.1	7.7	7.3	6.9	0.008
25	8.4	8.0	7.6	7.2	6.7	0.008
26	8.2	7.8	7.4	7.0	6.6	0.008
27	8.1	7.7	7.3	6.9	6.5	0.008
28	7.9	7.5	7.1	6.8	6.4	0.008
29	7.8	7.4	7.0	6.6	6.3	0.008
3	13.5	12.7	12.0	11.2	10.5	0.015
30	7.6	7.3	6.9	6.5	6.1	0.008
31	7.5					
32	7.4					
33	7.3					
34	7.2					
35	7.1					

© 2003 by Béla Lipták

TABLE 8.65h
Variations of Dissolved Oxygen with Below-Atmospheric Pressures

PSIA	IF H_2O BELOW ATMOSPHERIC	% SATURATED DISSOLVED OXYGEN
14.7	0	100
14.45	.578	98.3
14.2	1.16	96.6
13.7	2.31	93.2
13.2	3.47	89.8
12.7	4.62	86.4
11.7	6.93	79.6
10.7	9.25	72.8
8.7	13.9	59.2
6.7	18.5	45.6
4.7	23.1	32.0
2.7	27.7	18.4
0	34.0	0

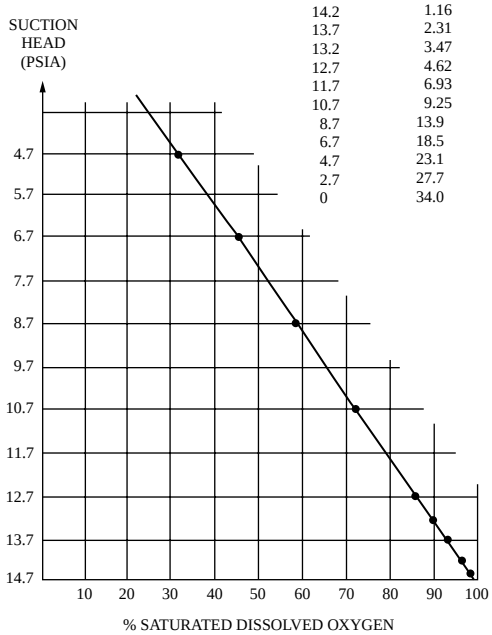

Total oxygen demand measures the oxygen demands of both the organic and the inorganic compounds that react with and consume oxygen. The readings reflect the consumption of oxygen in units of mg O_2 per liter of sample or in ppm.

Dissolved Oxygen Sensors

Dissolved oxygen concentration indicates the amount of oxygen present in the water and therefore the ability of receiving waters to support life. Electrochemical probes (Section 8.43) are often used to measure the amount of dissolved oxygen in water. In these probes, the dissolved oxygen passes through a membrane and is reduced at the cathode. The amount of current produced is an indication of the dissolved oxygen concentration.

Total Organic Carbon and Total Carbon Analyzers

Total organic carbon and total carbon (TC) analyzers (Section 8.58) convert the carbonaceous molecules to CO_2, which is then measured by infrared or other detectors. The carbon in the sample can be converted to CO_2 catalytically or by means of high-temperature (750°C) oxidation.

Total organic carbon measurements are often performed by the addition of an acid followed by sparging, which serves to remove the inorganic carbon from the sample. In the TC mode, no sparging takes place, because organic and inorganic carbons are measured together.

Turbidity Meters

Turbidity meters typically consist of a sample cell that is provided with a light source, lens, and photocells for detection (Section 8.60). The water sample flows through the cell, and the cloudiness, caused by the suspended solids, is measured and recorded. Turbidity analyzers detect the amount of light that is either absorbed or scattered by suspended solids before reaching the detector, which is placed 180° to the incident light path.

Nephelometers

Nephelometry measures only the light scatter caused by suspended solids in the sample. Nephlometric measurements are therefore made with their detectors at a 90° angle to the incident light path.

The unit of measurement most often used is the nephelometric turbidity unit (NTU). As the amount of suspended particles in the sample increases, the amount of light scatter also increases, yielding a higher NTU value.

Wet Chemistry and Autotitration

Sophisticated hardware such as autotitrators (Section 8.66) and flow injection analyzers (FIA) are also used in water quality monitoring. Figure 8.65i gives a schematic of a flow

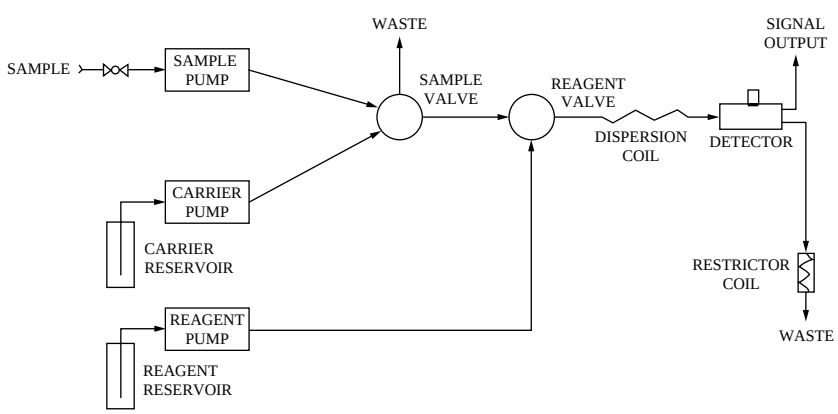

FIG. 8.65i
Simplified schematic of the configuration of a flow injection analyzer (FIA) package.

© 2003 by Béla Lipták

injection analyzer. These analyzers use wet chemical methods to quantify a wide range of specific ions and other components found in water. These instruments incorporate sophisticated liquid-handling sections.

These analyzers usually include a sampling section, which is followed by the conditioning section that performs the analysis by mixing reagents with the sample. The actual measurement of concentration is done either by end-point titration or by colorimetric evaluation, using ultraviolet or other detectors.

Volatile Organics

The concentration of specific volatile organic compounds (VOCs) in a water stream can provide the plant operator with information about the condition of a process or of a piece of equipment. The reasons for monitoring VOC are varied. The goal can be (1) process monitoring of an aqueous reaction, (2) spill and/or leak detection, allowing the plant operator time to divert the spilled chemical, thus avoiding contamination of a waterway or biological pond, or (3) monitoring effluent discharges to the environment for regulatory compliance purposes.

While TOC and TC are important water quality parameters (see Section 8.58), particularly in the petroleum and chemicals industries, their values often are limited by a lack of sensitivity or by a lack of specific information about a particular compound of interest.

In the past, monitoring for specific organic compounds has been limited to tedious laboratory techniques requiring highly trained personnel and elaborate equipment.[1] In the past decades, a variety of on-line process monitors have been introduced that have automated these techniques and analyses.[2]

VOC Compounds of Interest Table 8.65j lists a number of specific VOCs that are frequently analyzed in wastewater. Under normal conditions, there might be only a very low ppb level of a particular VOC in a wastewater stream. However, during a plant upset or due to other abnormal conditions, concentrations may quickly rise to high concentrations.

TABLE 8.65j
Volatile Organic Compounds Monitored in Water

1,1-Dichloroethylene	1,1,1,2-Tetrachloroethane
Methylene chloride	Ethylbenzene
trans-1,2-dichloroethylene	*m,p*-Xylene
1,1-Dichloroethylene	*o*-Xylene
cis-1,2-dichloroethylene	Styrene
2,2-dichloropropane	Bromoform
Chloroform	Isopropylbenzene
Bromochloromethane	Bromobenzene
1,1,1-Trichloroethane	1,2,3-Trichloropropane
Carbon tetrachloride	1,1,2,2-Tetrachloroethane
1,1- Dichloropropene	*n*-Propylbenzene
Benzene	2-Chlorotoluene
1,2- Dichloroethane	4-Chlorotoluene
Trichloroethylene	1,3,5-Trimethylbenzene
1,2-Dichloropropane	*tert*-Butylbenzene
Dibromomethane	1,2,4-Trimethylbenzene
Bromomethane	*sec*-Butylbenzene
Bromodichloromethane	1,3-Dichlorobenzene
cis-1,3-dichloropropene	1,4-Dichlorobenzene
Toluene	*p*-Isopropyltoluene
trans-1,3-dichloropropene	1,2-Dichlorobenzene
1,1,2-Trichloroethane	*n*-Butylbenzene
Tetrachloroethene	1,2-Dibromo-3-chloropropane
1,3-dichloropropane	1,2,4-Trichlorobenzene
Chlorodibromomethane	Hexachlorobutadiene
1,2-dibromoethane	Naphthalene
Chlorobenzene	1,2,3-Trichlorobenzene

© 2003 by Béla Lipták

Knowledge of the concentration of a particular compound can provide the operator with precise information as to the location of a particular leak or equipment failure. In addition, because there are regulations that limit the allowable concentrations of particular compound classes or particular compounds, information about a compound's precise concentration is required.

Chromatographs

Generally, chromatographs are the most sophisticated semicontinuous monitors utilized in water analysis. They are often used when the concentration of specific organics in a water stream needs to be determined (Section 8.12). More recently, chromatographs have also been used to measure the concentration of specific ions (hence, ion chromatography) in water.

When used for water analysis, the chromatograph requires the addition of specialized sample conditioning components. Most chromatographs are provided with either sparging or purging and trapping devices to separate the components of interest from the water sample.

Sample Obtained by Sparging Figure 8.65k shows a sparger-type sample conditioning system in front of a chromatograph. The water sample is introduced through a pressure regulator (PCV) to establish a constant pressure. The sample is then heated to a specified temperature to enhance the sparging process, and its flow rate is regulated.

After the flow regulator, the sample is continuously introduced into the sparging vessel, where helium or some other purge gas is sparged through the sample. As the purge gas disperses, it rises through the water and effectively extracts a portion of the volatile organic compounds (VOCs). This purge gas, which now contains some volatiles, is either sent to the chromatograph for analysis or passed through a trap (hence the name *purge and trap*) for further concentration before being introduced into the chromatograph.

The chromatograph separates the sample into its individual components and thus provides specific concentration readings for each. VOC concentrations as low as 0.1 ppb can be detected using these techniques.

Temperature and Environmental Variables

Many water quality parameters are temperature dependent, so their measurement requires temperature compensation. For this reason, the water temperature is always measured by a separate temperature transmitter or by sensors that are included in the analyzers.

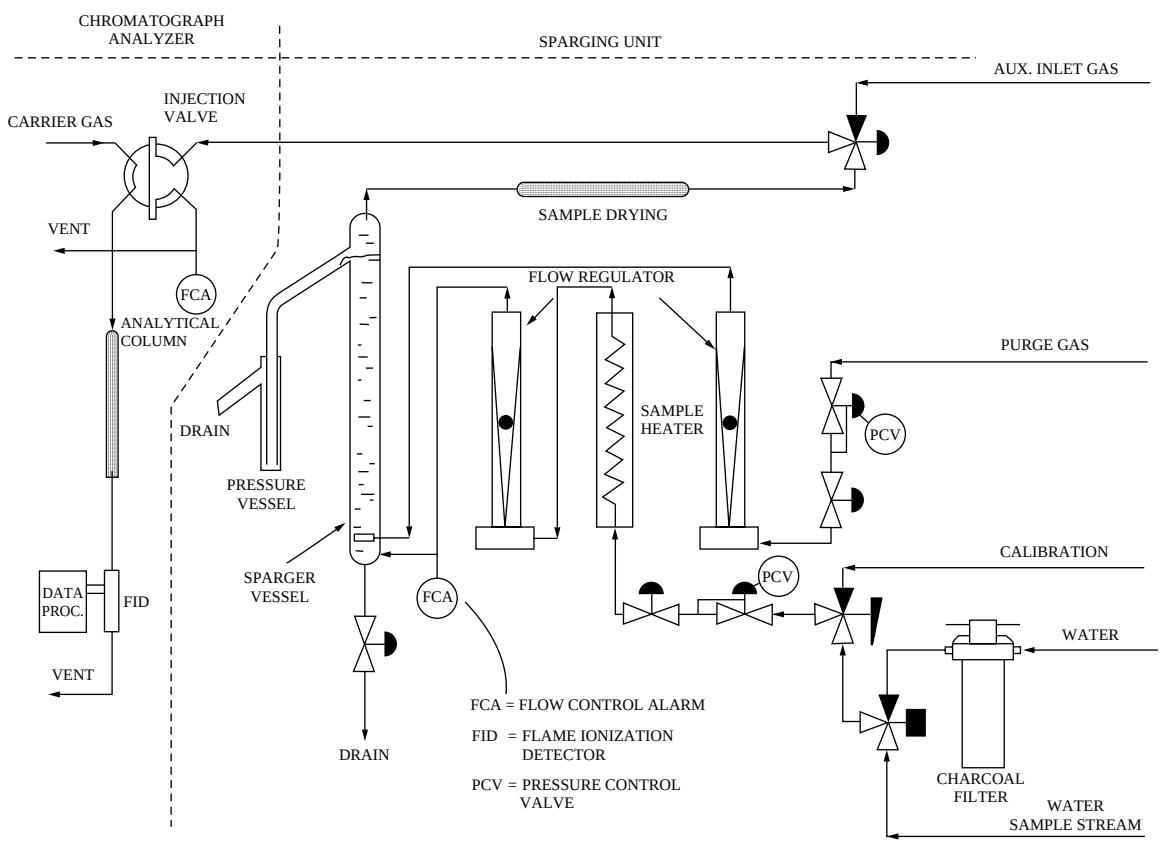

FIG. 8.65k

Volatile organic concentration in a water sample can be detected by gas chromatography where the gas sample for the chromatograph is obtained by sparging.

© 2003 by Béla Lipták

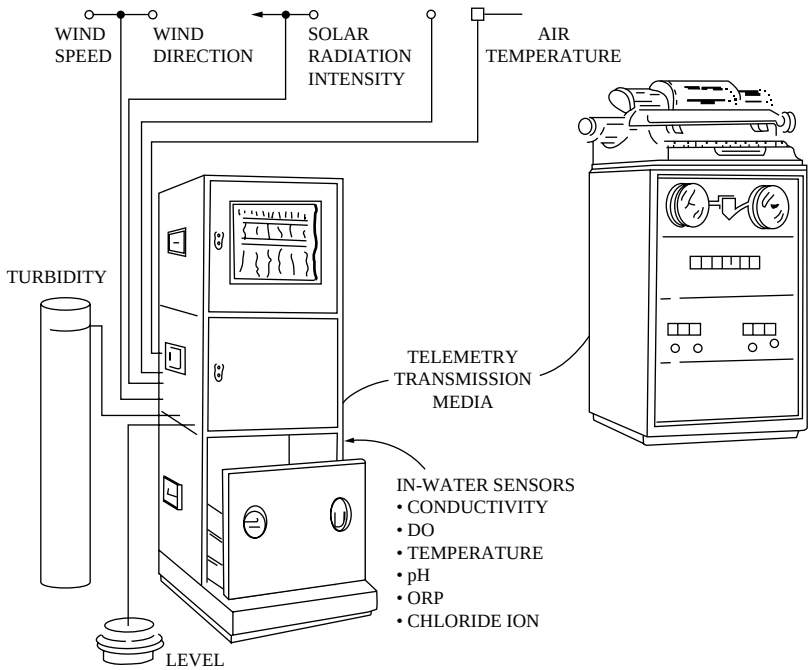

FIG. 8.65l
A complex package of an automatic water quality data measurement, collection, and transmission system.

Other parameters monitored while evaluating the quality of open water include the flow velocity of a river or the level of a water body, the wet and dry bulb temperature of the air, wind speed and direction, and solar radiation intensity (see Section 7.23 for weather stations).

UNATTENDED MONITORING STATIONS

When the purpose of an installation is to monitor water quality of lakes and rivers, the monitoring package must be designed to operate unattended for 30 to 60 days at a time. Such a monitoring station is illustrated in Figure 8.65l.

The unattended monitoring station usually consists of sensors for weather-related data, plus some of the water quality sensors discussed earlier. The measurements are transmitted by telephone lines or through radio telemetry to centralized data collection systems, where the collected data are analyzed and stored.

In industrial applications, the water quality data usually are not transmitted by telemetry but by hard-wired analog transmission or over digital networks. When the water quality analyzer is located in an industrial plant, its housing is usually designed for its intended environment (including explosion proofing if required), without the need for additional analyzer houses.

On the other hand, when the water quality monitoring station is located in a remote area, it is common practice to place the system inside a shelter, near the open water body being monitored (Figure 8.65b).

References

1a. Federal Register, (233): 69474-79 (December 3, 1979); 40CFR, Part 1414142 (November 13, 1985).
1b. Federal Register, 49 (209): 29–30 (October 26, 1984) 29–39.
2a. Soleta, D. D., On-line headspace GC, *Am. Lab.*, 21(5), 21, 1989.
2b. Maitoza, P., Valade, J. A., and Madigan, W. T., Continuous monitoring of volatile hydrocarbons in water at the ppb level with a sparger and process chromatograph, *Am. Lab.*, 21(1), 23, 1989.
2c. Combs, G. K., Kesselhuth, E. L., Ragains, W. G., and Waldorf, A. E., Design and performance of a sparger and process chromatograph for continuous monitoring of volatiles in water at the ppb level, *ISA Intl. Conf. and Exh. Proc.*, 1990, 0065–2814, 527.
2d. Annino, R. and Villalobos, R., Application of process gas chromatographic instrumentation to environmental monitoring, *Am. Lab.*, 23(15), 15, 1991.

Bibliography

Adams, V. D., *Water and Wastewater Examination Manual*, Lewis Publishers, Boca Raton, FL, 1989.
ASTM Standards, vols.11.01 and 11.02, Water and Environmental Technology (annual).
Baird, R. B. and Smith, R. K., *Third Century of Biochemical Oxygen Demand*, Water Environment Federation, Alexandria, VA, 2002.
Buffle, J., Ed., *In Situ Monitoring of Aquatic Systems*, John Wiley & Sons, New York, 2000.
Collin, F., Ed., *Monitoring Water Quality*, Elsevier Health Science, New York, 1998.
D'Alessandro, P. L. and Characklis, W. G., Simple measurement technique for soluble BOD progression, *Water and Sewage Works*, September 1972.
Dawson, R., *Data for Biochemical Research*, Oxford University Press, New York, 1990.

© 2003 by Béla Lipták

Dubois, R., van Vuuren, P., and Tatera, J., "New Sampling Sensor Initiative: an Enabling Technology," 47th Annual ISA Analysis Division Symposium, Denver, CO, April 14–18, 2002.

Fresenius, W. et al., *Water Analysis*, Springer-Verlag, Berlin/New York, 1988.

Geisler, C., Andrews, J. F., and Schierjott, G., New COD analysis arrives, *Water and Wastes Eng.*, Co, April 1974.

Hill, N. H., Carbon analyzers for contaminants in water, *InTech*, March 1969.

Kaiser, J. et al., *Bioindicators and Biomarkers of Environmental Pollution*, Science Publishers, Enfield, NJ, 2001.

McMahon, T. K., "The New Sampling/Sensor Initiative," *Control*, August 2001.

McNeil, B. and Harvey, L., *Fermentation: A Practical Approach*, IRL Press, Oxford, UK, 1990.

Meyers, R. A., Ed., *Encyclopedia of Analytical Chemistry: Instrumentation and Applications*, John Wiley & Sons, New York, 2000.

Mitchell, M. K. and Stapp, W., *Field Manual for Water Quality Monitoring*, 12th ed., LaMotte Company, Chestertown, MD, 2000.

Ratliff, T. A., *The Laboratory Quality Assurance System*, Van Nostrand Reinhold, New York, 1989.

Riegler, G., 3-minute BOD assessments, *InTech*, May 1987.

Rundle, C. C., "A Beginners Guide to Ion-Selective Electrode Measurements," www.nico2000.net/book/guide1.html.

Safranko, J. W., Schuler, J. D., and Small, J. W., A low-temperature microprocessor-controlled TOC analyzer, *Am. Lab.*, August 1983.

Shaw, A. et al., The Use of Online Respirometric Monitoring, WEFTEC2001 Conference, Water Environment Federation, 2001.

Sherman, R. E., *Process Analyzer Sample-Conditioning System Technology*, John Wiley & Sons, New York, 2002.

Siepmann, F. and Teutscher, M., Abschlussberichtzum F + E Vorhaben 102-WA 161 Bau and Erprobung eines Mess, BMFT Abt Umweltforschung, 1984.

Small, J. W., New advances in TOC analysis, *Pollut. Anal.*, September 1980.

Thomson, M., "Interfacing Sample Handling Systems for On-Line Process Analyzers," www.measurementation.com.au/tp-1.htm, January 14, 2002.

Tool, H. R., Manometric measurement of the biochemical oxygen demand, *Water and Sewage Works*, June 1967.

© 2003 by Béla Lipták

8.66 Wet Chemistry and Autotitrator Analyzers

C. P. BLAKELY (1974,1982) **B. G. LIPTÁK** (1995) **E. H. BAUGHMAN** (2003)

Types of Designs:	A. Autotitrator, volumetric devices operated to pH or color change end points B. Colorimetric wet-chemistry analyzers C. Flow injection analyzers
Samples:	No suspended solids are allowed when colorimetric units are used, and minimal solids are allowed with the others.
Inaccuracy:	1 to 3% full scale; accuracy a function of the calibration
Costs:	The cost of on-line industrial units ranges from $10,000 to $100,000 depending on what the unit does. Automatic laboratory units for automatic preparation of up to 36 sample tubes, with operations including the dispensing of diluents and titrants into each, stirring, measuring, and recording their pH values, and then automatically moving sample tubes to the rinsing station, cost from $15,000.
Partial List of Suppliers:	Brinkman Instruments Inc. (A, B) (www.brinkmaan.com) Bran & Luebbe Analyzing, Technicon Industrial Systems (B, C) (www.branluebbe.com) Cole-Parmer Instrument Co. (A) (www.coleparmer.com) Fisher Scientific (A) (www.fishersci.com) Global FIA (C) (www@globalfia.com) Ionics Inc. (B, C) (www.ionics.com) Milton Roy, Process Analytical Div. (B) (www.miltonroy.com) Rosemount Analytical Inc. Uniloc Div. (B) (www.rauniloc.com) Sargent-Welch Scientific (A) (www.sargentwelch.com) Tytronics, a Metrisa Company (www.monitek.com/metrisa/tytronics) Traceable standards can be obtained from Solutions Plus, a division of Ricca Chemical (customerservice@Riccachemical.com)

INTRODUCTION

Wet chemistry analyzers and autotitrators are jokingly called "chemist in the box" devices, because they automatically and accurately perform the operations that a laboratory chemist would perform manually to gain the same end result. Because of their complexity, one might think of them as the forerunners of robotics in the field of process control.

From the hardware point of view, flow injection analysis (FIA) methods eliminate much of the complexity but add the requirement of precise timing. The laboratory variations of these units actually use robotic arms to automatically and sequentially analyze up to 100 samples while recording the data, rinsing the sample tubes, etc.

Readers who are interested in maintaining contact and staying up to date with the most recent developments in the field of wet chemistry analyzers should participate in the conferences on process analyzers organized by IFPAC.[1]

AUTOMATIC TITRATION

Titration is a volume measurement process in which an unknown concentration of a substance is determined by detecting the volume of a standard reagent that is needed to complete a reaction (to reach a reaction end point). The *point of equivalence* represents the perfect stoichiometric balance between unknown substance and the reagent. The error in titration—the difference between the equivalence point and the actual end point—is called the *indicator blank.*

Types of Reactions and End-Point Detectors

Titrations can be grouped by the *type of reaction*, which can be acid-base, oxidation-reduction (ORP), complexation, or precipitation. Titrations can also be grouped by the *method of end-point determination*, which (1) can be colorimetric, using pH-sensitive dyes, (2) can involve electrochemical

© 2003 by Béla Lipták

electrodes, which can detect voltage (potentiometric, such as pH, specific ions, etc.), current (amperometric), resistance (conductivity), or total charge (coulometric), or (3) can be spectrophotometric or photometric titrations, which use the changes in radiation absorption to detect the end point (a form of the colormetric detector but no added reagent is required).

When titration is done automatically, the sample is automatically delivered to the analyzer, the delivery of the titrant is automatically terminated when it reaches the end point, and the results are automatically recorded or transmitted for control purposes. Autotitrators are usually capable of targeting end points within a 0 to 14 pH or 0 to 2000 mV range.

Continuous and Batch Designs

When used for process control, the autotitrator can be continuous or batch type. For closed-loop control, the continuous titrators are preferred, because their dead time and sample transportation lag times are lower. They detect the titrant flow rate required to bring the sample (at a constant flow rate) to its end point. Autotitrator-based, closed-loop control systems are used for neutralization applications in which the sample (for example, wastewater) is buffered, so pH measurement alone is insufficient to determine the amount of neutralization agent requirement.

The operation of a simple, batch-type, automatic titrator is shown in Figure 8.66a. Here, the sample is continuously

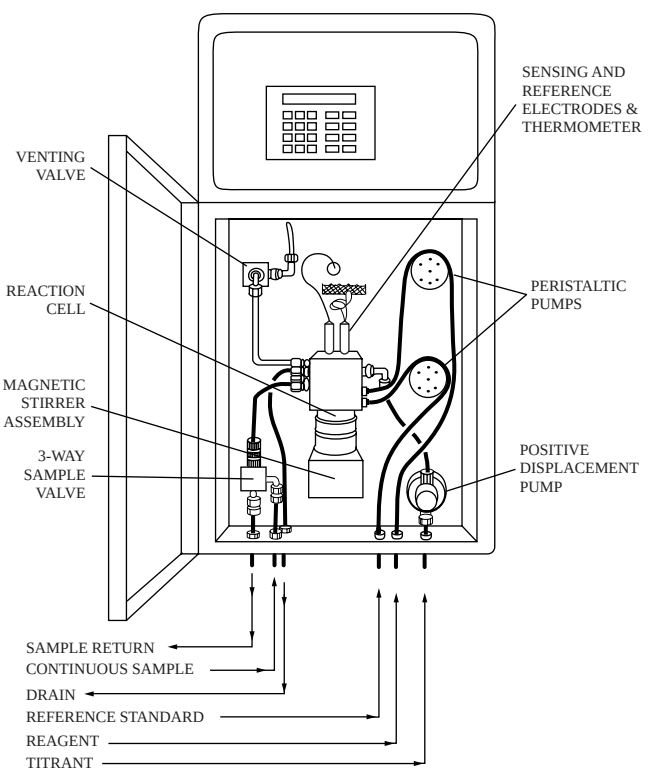

FIG. 8.66a

Field-programmable autotitrator. (Courtesy of Tytronics, a Metrisa Company.)

received and is returned to the process through a three-way sample valve. When the field-adjustable program calls for a new sample, the three-way valve opens, and the reaction cell is filled with a new sample. The sample is magnetically stirred, and a titrant is added by an accurate piston pump. A less accurate peristaltic pump can be used to add another reagent, such as an indicator.

Temperature-compensated electrodes automatically detect the end points, and, when the data has been registered, the reaction cell is drained and vented. Depending on the programming, the measurement cycle can be followed by an automatic recalibration cycle using a standard reference solution, a rinse cycle, or another sample.

VOLUMETRIC ANALYZERS

Volumetric analyzers are devices that automatically perform titrations either to electrometric end points or to their colorimetric equivalents. High-precision instruments are available as well as simpler standard devices that perform valuable functions with adequate accuracy and repeatability.

Instrument manufacturers have not yet recognized the need for on-line automatic titrations and for the development of a wide array of titrators. (The problem from the manufacturers' point of view is that they do not see a big enough market for any one type of unit to justify the development costs.)

Two distinct types of titrators are available (pH and colorimetric end point) for pollution control work, and these are generally limited to the conventional acid-base tritrations. The development of specific ion activity electrodes and of miniaturized submersible color probes using fiber optics for light transmission and collection are beginning to open the doors to automatic titrations of a wider variety.

High-Precision Volumetric Analyzer

The high-precision automatic titrator performs in the exact same manner as a device used by a chemist in the laboratory. The titration beaker is flushed out with the sample, and then a known volume of sample is added. An electrode assembly measures the sample pH. Under constant, gentle agitation, titrant is added until the desired, preselected endpoint is reached. When that occurs, the titration is stopped and the volume of the titrant that was required to reach the end point is recorded. A typical analyzer of this type, in simplified form, is shown in Figure 8.66b and described below.

Operating Sequence A programmer signals the fill valve (A) to open and to fill the burette (B) with reagent from the storage bottle until the level in the burette reaches the full mark. At this time, the conductivity follower probe (D) is at maximum height. Next, the programmer opens the sample fill valve (E) and drain valve (F) and, after a few minutes of flushing, the sample drain valve is closed, and the cell (G) is allowed to fill and overflow to waste. Then, the sample fill valve and the constant-level drain valve (H) are both closed.

© 2003 by Béla Lipták

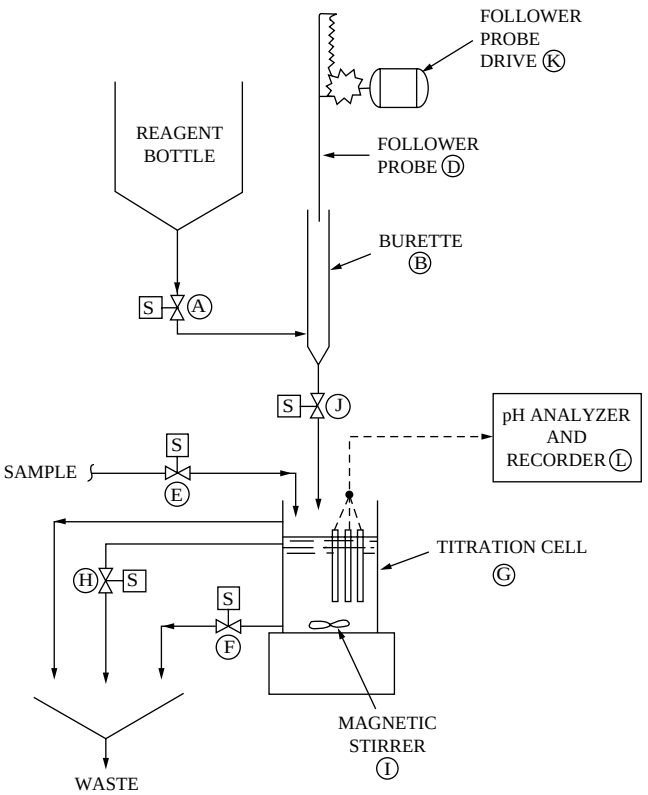

FIG. 8.66b
The main components of a volumetric analyzer (autotitrator).

At that time, the magnetic stirrer (I) is started and the regent valve (J) is opened. The pH of the solution in the titration vessel (G) is continuously measured and recorded. As the titrant level in the burette drops below the tip of the follower probe, the conductivity bridge is broken, and the drive motor (K) drives the probe down until the tip of the probe is again in contact with the solution. When the preset end point has been reached, the pH analyzer (L) closes the titrant valve (J), and the distance traveled by the follower probe is an indication of the volume of titrant used to complete the titration.

Multiple End Points Titrations to two end points can also be made. This permits automation of the classic phenolphthalein– methyl-orange titration, for example, of a dibasic molecule. The first end point is represented by the first plateau and may be stored in the electronic memory of the device. Most units do not use recorder pens anymore but compare the readings against electronically determined plateaus that would be seen if a pen were present

The titration then proceeds to the second predetermined end point. The second plateau of the recording pen corresponds to the milliliters of reagent used for the complete titration. Control can be based on the first end point, the second end point, or a computed value using both end points.

In the classic phenolphthalein–methyl-orange titration with acid being the titrant, the final solution pH is always acidic. It is also possible to titrate acidic samples to one or two basic end points. In these applications, it may be desirable to interpose into the flush-and-fill cycle (before titrations for electrode maintenance) an occasional acid rinse. Such an occasional acid rinse will keep the system operational; without it, the metal hydroxides or carbonates might precipitate out on the windows or electrodes and eventually make them nonfunctional.

This type of volumetric analyzer is not as sensitive to environmental conditions as its colorimetric counterpart, and it does not require as clean a sample. However, it is a relatively sophisticated electronic instrument, so it should be accorded an operating environment quality similar to that of a control room.

Simple Volumetric Analyzer

A simple, continuous automatic titrator is illustrated in Figure 8.66c. It utilizes the classic method of titrating to obtain color change end points. In operation, an indicator solution is added to a known volume of sample, and the titrant is then admitted until the color change indicates that the desired end point has been reached. At this point, the volume

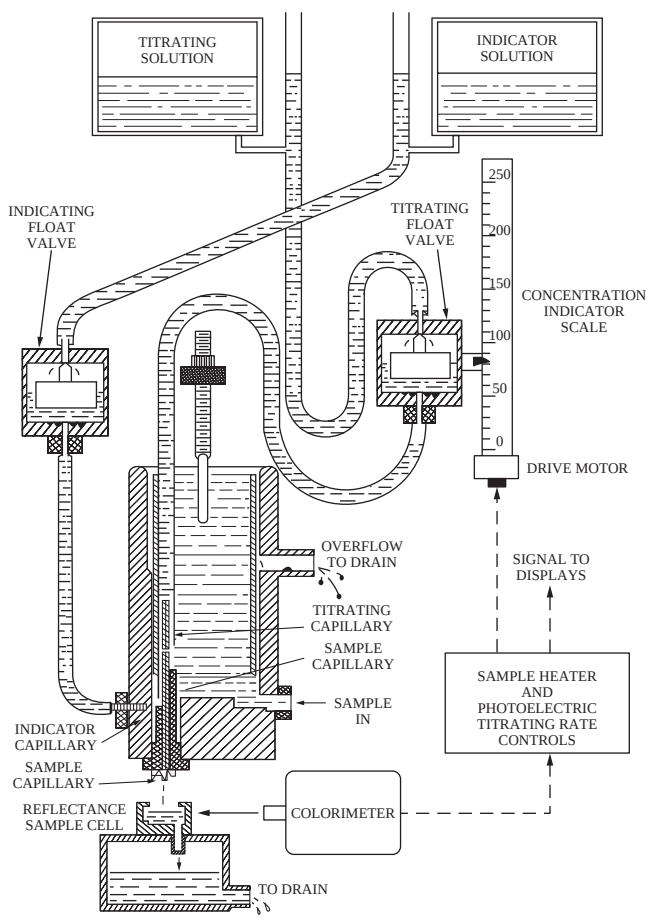

FIG. 8.66c
The operation of a continuous automatic titrator that is using color change as a means of determining the end point.

© 2003 by Béla Lipták

of titrant used is read as an indication of the concentration of the active species that were present in the sample.

This instrument can also operate as a continuous analyzer. In that configuration, the various flows are detected by measuring the pressure drop (d/p) through capillary tubes that are directly proportional to the laminar flows in those tubes. (The assumption that d/p and flow are linearly related is correct only if the fluid viscosity is constant. This might not be the case if the flowing fluid is a hydrocarbon or if the fluid temperature is not accurately controlled.)

In the titrator, the sample flow is maintained constant by a fixed float valve. An automatic raising or lowering of the titrant float valve can vary the titrant flow. A colorimeter is adjusted to sense the end-point color, and it is set to cause the float valve to open or close (drive up or down) so as to maintain this color. In that case, the float valve elevation (or position) is an indication of the prevailing concentration and can also be recorded.

Because the effectiveness of this device depends on color development and on maintaining the end-point color, it is imperative that the samples be free of suspended matter. To perform a two-end-point titration, two titrators are needed: one for the equivalent of the phenolphthalein end-point detection, and a second for the equivalent of the methyl-orange end-point measurement, which was cited in the classic titration example earlier. It is then necessary to use the outputs from each titrator and to use external electronics for the calculations.

Applications of Volumetric Analyzers

One widespread problem facing the pollution control engineer is the precipitation of heavy metals and similar applications that too often are lumped in with pH control. Consequently, conventional pH instrumentation is frequently used when it has little chance of success or is likely to give constant trouble because of electrode fouling. To overcome these problems, engineers frequently choose highly sophisticated control systems, which might include both feed-forward and feedback control loops, bias and variable ratio stations, and a variety of electrode cleaning devices ranging from mechanical wipers to ultrasonic cleaners.

Most heavy-metal precipitation problems are similar to the hot or cold lime soda softening techniques used in the preparation of water for boiler use and to the preparation of hard water for municipal drinking water suppliers. Cold or hot process softeners are readily controlled by titration. Under manual conditions, a flow meter on the influent flow transmits pulses to a counter for every 100 gal (379 l) metered. The counter accumulates a predetermined number of pulses and activates a repeat cycle timer.

An operator collects a sample of softened water, titrates to the phenolphthalein end point (P reading) and the methyl-orange end point (M reading), and then makes the calculation 2P – M. He then adjusts the timer to feed sufficient lime and soda ash to maintain the desired value, which is close to zero. An automatic titrator can also perform this function, and electronic circuitry can make the computation and adjust the timer settings.

Another simple pH control problem is in the operation of cooling towers where hot water from distillation units is cooled but, because the water tends to pick up CO_2 from the atmosphere, it forms an acidic, corrosive solution. The addition of a base can easily counteract this, and one needs a titrator to determine how much base is to be added.

COLORMETRIC ANALYZERS

For a more detailed discussion of colorimeters, refer to Section 8.15.

A chemist who is well trained, experienced, and working unhurriedly in a well equipped laboratory can analyze samples very accurately. Such conditions seldom if ever exist in a plant where the engineers or operators want answers immediately after they send their sample to the laboratory. In a way, their attitude is understandable, because they want to find out what is going on in their process, and answers that arrive several hours later will not help much.

High-precision, automatic colorimetric analyzers perform in the manner that plant engineers would like the laboratory chemist to perform. In this instrument, the sample and reagents are accurately metered and proportioned. Reagents are added in identical sequences, with mixing and time delay steps between additions, as is required by the chemistry and the laboratory procedure. Where reactions are temperature dependent (and most are), a constant-temperature bath is included in the analysis hardware. Sample preparation by distillation or dialysis can also become part of the automatic analytical procedure if required. The analysis results provide about the same precision that can be obtained by an experienced chemist, and they demonstrate better repeatability.

These analyzers contain delicate, high-precision electronic components that emit low-level signals requiring enormous amplification for recording and control. Therefore, it is generally advisable to make some investment in analyzer site selection and preparation. Vibration, dirt, and dust should be eliminated, and sudden ambient temperature variations should be avoided. An air-conditioned environment is ideal for the analyzer, and proper maintenance is also essential. It should also be realized that wet chemical procedures frequently liberate corrosive or deleterious gases. These must be vented from the analyzer cubicle to prevent corrosion of the electronic components and must be expelled from the temperature-conditioned room.

As colorimetry is a measure of light absorption resulting from the color produced by the chemical reactions, it is essential that the sample fed to the automatic analyzer be free from suspended matter. This requirement can be relaxed somewhat by using a dual-wavelength analyzer to detect the color change, but dual-wavelength colorimeters are uncommon and expensive.

© 2003 by Béla Lipták

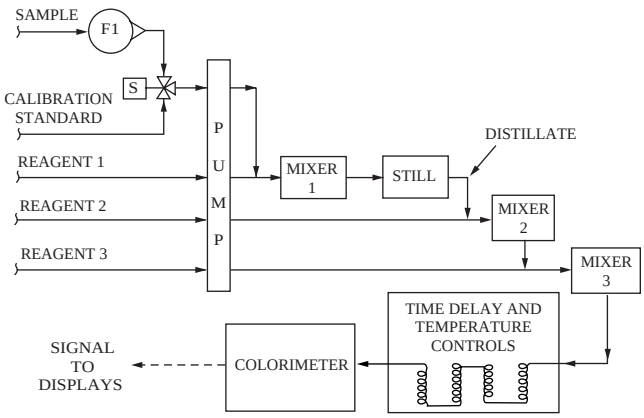

FIG. 8.66d

Precision colorimetric analyzer configuration, which includes a sample distillation step, as might be used for phenol or cyanide detection.

Reagent consumption for colorimetric analyzers of all types varies with the analysis to be performed. Generally, the high-pressure units use proportionately less reagent than the standard devices, but the reagent used by the high-pressure units is usually costlier and harder to prepare.

High-Precision Colorimetric Analyzers

To accurately ratio the flow streams of a sample to the flows of dilution solvents and reagents, most high-precision laboratory analyzers use a multiple-head peristaltic pump that receives several plastic tubes and pumps all these liquids simultaneously.

As shown in Figure 8.66d, the ratio control between the sample and reagent fluids is achieved by the careful selection and control of the internal diameters of the tubes. Mixing is achieved by changing the tube diameters repeatedly downstream of the pump (thereby changing velocities), by changing flow directions, or both. It is difficult to convert this technology to automatic, on-line operation because of the high maintenance requirements of the pump and tubes.

Use of Gas Bubbles One analyzer, called the *segmented flow analyzer*, introduces air through one of the pump tubes to create discrete air gaps between segments of fluid. It then passes these liquid segments through horizontally mounted glass or plastic coils. The air gaps, while keeping the samples separate, permit free-fall of the liquid segments, thus achieving mixing of sample and reagent. Coils provide retention time. Where temperature control is required, these retention time coils can be made part of a constant-temperature bath that is thermostatically controlled and provided with an adjustable set point.

The reacted sample then passes through a "debubbler" and on to the analyzing section that frequently is a colorimeter. The colorimeter establishes a baseline when there is no sample in the stream and compares that to the reading when a sample is present. The advantage of this approach is that it compensates for the drift in light source intensity, electronic drift, and window fouling.

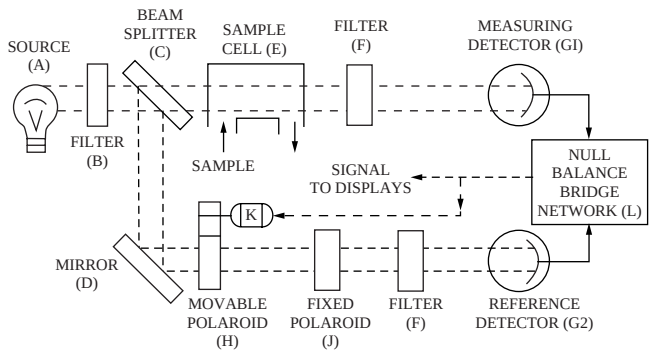

FIG. 8.66e

The main components of a dual-beam colorimeter.

Other approaches use two beams from the same light source and split the beams, but this does not compensate for any window fouling. One needs to calibrate the difference in readings between the baseline and sample concentration, and this is done with standards.

Split-Beam Colorimeter Figure 8.66e describes an older design, the split-beam colorimeter. Here, a single beam from light source (A) passes through an optical wavelength filter (B) and is split into two beams by the beam splitter (C). Next, the sample beam passes through the sample flow cell (E) and through an optical filter (F), which diffuses the light beam over a wide surface area of the measuring photocell detector (G_1). The other beam passes through a movable polarizing lens (H), a stationary Polaroid lens (J), and an optical filter (F) before it strikes an identical, matched photocell (G_2).

With distilled water or a pure solvent in the sample cell, a maximum amount of light is transmitted to cell G_1. With the polarizing lenses aligned in parallel, maximum light is also received by photocell G_2. Therefore, the outputs from the two photocells are equal, and the bridge is in balance.

With a colored solution in the sample cell, the light intensity striking photocell G_1 is attenuated. Output G_1 is now less than output G_2, and the error signal drives the movable polarizing lens through drive motor (K) until the polarizing system has decreased the light intensity striking G_2 so that the outputs of the two photocells are again equal. The distance traveled by the movable polarizing system is a function of color intensity of the sample and can be recorded as the concentration of the constituent analyzed.

Most colorimetric analyses obey Beer's law [see Equation 8.61(1)]. As such, they tend to be nonlinear. Usually, however, the range requirement for a specific application is narrow enough that the pertinent portion of the curve may be considered linear or can be linearized with a log amplifier.

Calibration Colorimetric analyzers are generally equipped with automatic zero and standardization features. At specific intervals, the reagent feed is stopped, and the sample is introduced only into the sample flow cell. After a predetermined period of flushing with pure, unreacted sample, the analyzer reading should be zero. Therefore, under these conditions,

© 2003 by Béla Lipták

the reading is reset to zero, thus compensating for sample or flow cell discoloration and for electronic drift.

Next, the sample is diverted to waste, the reagent system is reactivated, and, instead of a sample, a laboratory-prepared standard solution is introduced. After an interval sufficient to replace all liquids in the sample flow cell with this freshly reacted standard solution, the output signal is automatically compared to the signal level expected for the standard solution strength, and adjustments are made if needed.

The length of the optical path (i.e., the depth of reacted sample penetrated by the light beam) is critical. In an analysis for trace amounts of contaminants in which the color developed by the chemical reaction is expected to be weak, a long optical path is essential. The longer the light path, the less signal amplification is needed and, therefore, the greater will be accuracy of the analysis.

Conversely, if the color intensity is high, a short optical path is preferred so that the high-color intensity does not attenuate the light beam excessively. If the absorbance is too high (greater than ≈1), Beer's law will fail, and the signal will no longer be linear with the log amplifier.

High-precision analyzers generally have interchangeable flow cells that may range from 2 to 10 in. (50 to 250 mm) in optical path length. The longer the path length, the more critical is the requirement to remove solids or light scattering particles from the sample.

Simple Colorimetric Analyzers

The simple, continuous colorimetric analyzers are generally limited to analyses where no more than two or three reagents need to be added simultaneously. Although some of them can proportion the reagents to the sample by individual head vessels and capillaries, other designs employ multiple solution pumping heads coupled to a common drive motor. Each pumping unit operates in the same phase and is individually adjustable.

Mixing of sample and reagent is accomplished in many ways, from mechanical stirring in the sample cell to changes in velocities and direction, to free-fall into a head vessel that, in turn, discharges into the colorimeter flow cell.

Figure 8.66f illustrates such an unsophisticated colorimeter. The light from a single light source (A) is collimated by a lens (B) before it passes through the sample cell (C), in a single or double pass as illustrated. The light then passes through the color filter (E) on its way to the measuring photocell (F_1).

A second light beam passes directly to a second reference photocell (F_2). Both beams can be attenuated by a shutter (G). These shutters are used for zero and full-scale adjustment. The output differential is generally displayed in terms of constituent concentration on a nonlinear meter scale, or the output can be run through a log amplifier and reported on a linear scale. Outputs for recording or other displays are also available.

Calibration Ordinarily, these simple analyzers are manually standardized against calibrated standard slides that are provided by the manufacturers. These may be in the form of one or more calibrated orifices that limit the amount of light striking the measuring photocell, or in the form of optical filters serving the same purpose.

To overcome the effect of ambient temperature changes on photocell output, colorimeters may be equipped with thermostatically controlled heating elements that make the system relatively free from drift. It should be emphasized that if the operator checks only the detector of the colorimeter for drift, he will not know if the complete analyzer is in calibration. The only way to check the whole system is send a standard sample through the sample-conditioning system and into the analyzer.

On/Off Batch Colorimeters

Continuous analysis is not necessary if only an alarm or on/off control is required on process streams that are relatively stable. For these applications, automatic batch analyzers have been developed. These are usually single reagent devices in which the set point for alarm or control is fixed by the reagent.

Hardness analysis is an example. Based on the Versene method, reagents have been developed that undergo a dramatic color change from green to red when hardness exceeds the chelating properties of the reagent. Reagents exhibit this vivid color change for a wide range of water hardness values, such as 0.75, 1.5, 5.0, 9.0, and so on up to 50 ppm or more of calcium carbonate.

This design is shown in Figure 8.66g, where a photosensitive device is employed that sees only green light, a

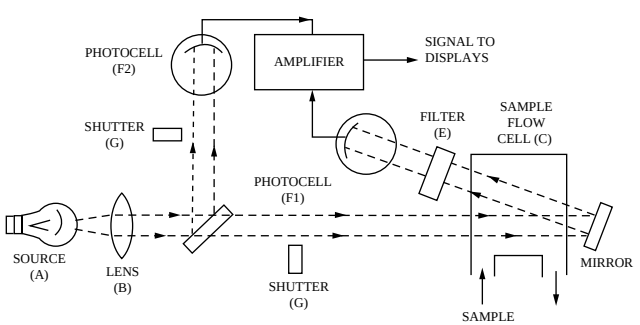

FIG. 8.66f
The components of an unsophisticated, standard colorimeter.

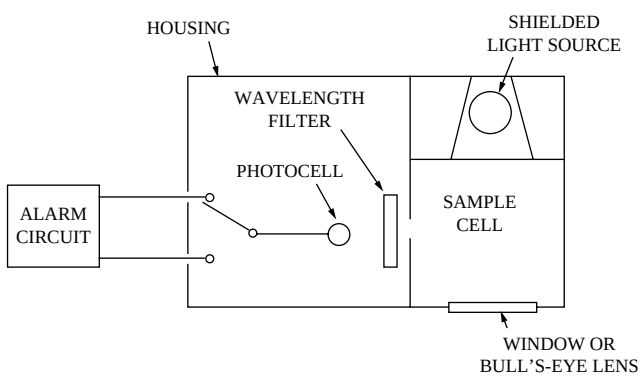

FIG. 8.66g
The configuration of an on/off batch colorimeter.

© 2003 by Béla Lipták

circumstance denoting that the concentration in the sample being analyzed is below the reagent set point. At the color change from green to red, the wavelength filter screens out all light in the red wavelength. The photocell then receives no light, and an alarm signal is generated.

The sample cell is illuminated from the back and is visible to the operator. Fail-safe features are inherent in this approach. Failure of the light source, the photocell, the reagent, or the sample flow, if not visually detected by the operator, will be noted as a result of energizing the alarm circuit. With this type of analyzer, it is obviously not possible to record analytical values. However, it is possible to use a simple voltmeter-type event recorder that is actuated by the alarm circuitry and will record the time of day and duration of the alarm condition.

Applications of Colorimetric Analyzers

In the control of water pollution, automatic colorimetric analyzers are used in the monitoring of influents into a treatment facility, in the monitoring of effluents from a treatment facility, and in the control of the actual treatment or abatement process.

Table 8.66h lists some of the more common analyses required by pollution abatement legislation, along with the minimum concentration or ranges that are also commercially available. To meet specific monitoring requirements, one can (with the assistance of the instrument manufacturers) develop or adapt chemistry to provide measurements that will satisfy the specific needs.

If, for example, a manufacturing process generates a waste stream containing hexavalent chromium, Cr^{6+}, and it is to be treated in a batch process, it may be sufficient to perform the following steps. Fill the treatment tank with the waste, and make a manual analysis to determine the amount of treatment chemicals that need to be added. After the treatment is complete, and prior to discharge, just manually analyze the result.

If this same waste is to be treated by a continuous process, it is very likely that conductivity measurements can be used more economically than colorimetry for the control of chemical additions. The effluent from continuous treatment, however, should be monitored for residual hexavalent chromium content after dilution with other wastes.

If, on the other hand, the alkaline chlorination process treats cyanide waste continuously, it may be more economical to monitor the effluent indirectly for residual chlorine rather than for cyanide by colorimetric means. The presence of free available chlorine in excess of 5 ppm would denote the absence of cyanide, because these two chemicals cannot coexist.

Where colorimetric analysis is warranted, efficient sample preparation and careful analyzer site selection are essential.

TABLE 8.66h
Available Automatic Colorimetric Analyses

		Type of Available Unit	
Types of Analysis	*Minimum Concentration (ppm)*	*High Precision Analyzer*	*Standard Analyzer*
Aluminum	10	♥	
Ammonia	10	♥	
Borate	10	♥	
Carbonate	4,000	♥	
Chlorate	12%	♥	
Chloride	10	♥	♥
Chlorine	5	♥	♥
Chromium Cr^{6+}	5	♥	♥
Chromium total	5	♥	
Copper	10	♥	
Cyanide	5	♥	♥
Fluoride	5	♥	♥
Hardness total	500	♥	♥
Iron	10	♥	
Magnesium	150	♥	
Manganese	2%	♥	♥
Phenol	5	♥	
Phosphate total	100	♥	♥
Silica	15	♥	♥
Sulfate	500	♥	
Surfactants (anionic only)		♥	
Chemical oxygen demand (COD)		♥	

FLOW INJECTION ANALYSIS

Flow injection analysis (FIA) has been pioneered by Jarda Ruizcka, now at the Center for Process Analytical Chemistry (CPAC), at the University of Washington in Seattle. Flow injection analysis looks at the change in detector reading caused by the interaction of the sample and reagent. Detectors can be electrochemical devices, optical devices, and so on, and the advantage of looking at the change in signal rather than the absolute signal exists because this approach provides a built-in drift correction.

Much has been published about FIA, but its on-line process applications have been few. One such application was described in Section 8.65, where it is used in water quality monitoring applications. Described below are two very different and successful on-line applications of the technology. The laboratory application of the technique will be discussed first.

Laboratory FIA

Classic laboratory FIA consists of a peristaltic pump moving a reagent stream past a detector (Figure 8.66i). The period between samples gives an excellent baseline for the detector. Periodically, sample is injected into the moving stream of reagent, reaction takes place, and the detector responds. For example, if the sample were an acid, the reagent would be a base, which would partially neutralize the sample. The detector, a pH meter, would note the drop in the pH of the stream as the sample passed. The method is extremely reproducible.

© 2003 by Béla Lipták

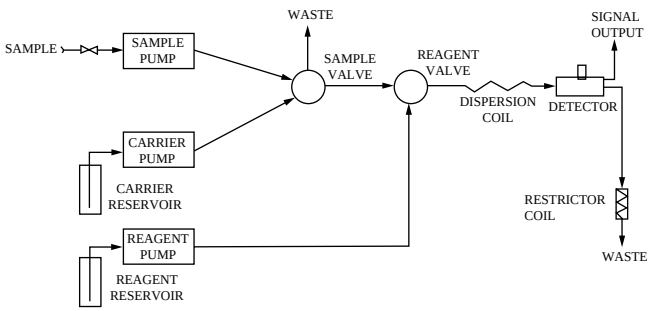

FIG. 8.66i
Laboratory configuration of a flow injection analyzer (FIA) system.

Industrial FIA

The factors that hinder FIA's acceptance by the processing industries include two basic needs.

1. There exists a need to conserve the amount of reagent consumed because, in the process world, there is a lot of sample, and the only way to keep it fresh is to let it flow continuously. For this reason, the roles of the reagent and the sample should be reversed.
2. It is desirable to eliminate the peristaltic pump because of the short lifetime of the pump tubes and because of its lack of long-term reproducibility.

The peristaltic pump is capable of generating low flows. These low flows reduce reagent consumption and allow sufficient time between the sample injection and detection points for the reaction to take place. Another big advantage of the peristaltic pump, when used for FIA, stems from the pump pulses, which promote mixing of the sample with the reagent.

One can provide low flow without a peristaltic pump by using pressurized reservoirs for reagents. If the reservoir is at constant pressure, which is easy to maintain with an air or nitrogen gas pressure, constant flow is guaranteed, because the pressure drop through the piping is also constant. To substitute for the mixing action of the pulses from the peristaltic pump, one can install a coiled piece of tubing or a static mixer.

Application Example 1

To illustrate the problems and advantages associated with the reversing of the sample and reagent, let us look at the problem of detecting 100 to 1,000 ppm of polymer in a butane stream. The polymer is polyisobutylene, and its molecular weight is 1000 to 1500.

It was noted that if the butane sample was put into isopropyl alcohol (IPA), the solution became cloudy. It was also shown that the amount of "cloudy" formation was directly related to the amount of polymer in the butane solution. The problem was that the "cloud" caused by the undissolved polymer would coat the windows of the detector cells and would distort the detector readings.

The solution was found by injecting IPA into the butane stream, which does not result in detector drift and causes no cloud formation, even when polymer is present. This was the case, because the sample had more butane in it than required to cause precipitation when the IPA was injected.

The analyzer devised for this application had a ten-port valve to trap a small sample of butane-polymer between two larger samples of IPA, which are then trapped in the butane solution. In this way, a detectable turbidity from the sample is trapped in the IPA, and the normally flowing stream of butane cleans the turbidity cell. The IPA requirements for this analysis were very small, because only the two "traps" had to be refilled between samples.

Application Example 2

In this application, the problem was to measure the hydrogen sulfide (H_2S) and carbon dioxide (CO_2) in an aqueous amine stream. This process can be found in many natural gas plants and in refineries where the amine streams are used to extract H_2S and CO_2 from a hydrocarbon vapor stream. In this process, the pressure on the amine is reduced after picking up the H_2S and CO_2, and the temperature is raised, which releases the H_2S and CO_2 from the amine so it can return for another load.

From the control point of view, the following two unresolved questions were costing the plant money.

1. How hard do we need to "strip" the amine? If too much stripping is applied, the required heat is wasted, and amine degradation results, which also costs money.
2. What flow of amine is necessary to meet product specifications? If the flow is excessive, it wastes energy, because it has to be heated; in addition, it extracts some of the product from the hydrocarbon stream. If too little flow (or too little heat) is used and the product does not meet specifications, the product is wasted to flare. (One gas plant achieved energy savings of $366,000 per year by optimizing flows, and identified more than $1,000,000 per year in extra gas that had been extracted with their previous control system.)

So the question is, how can we measure H_2S and CO_2 in an aqueous amine stream? Both are acids, and the CO_2 becomes H_2CO_3 when it dissolves in water. Therefore, simple acid-base titration will give only the sum of the two. The laboratory method is to precipitate the H_2S as PbS and then titrate the H_2CO_3. But this approach is not attractive for on-line use. UV spectroscopy of the aqueous amine solutions "sees" only the H_2S and ignores the CO_2. In addition, the CO_2 amine stream can become very corrosive and destroy the unit.

If the aqueous amine is put into a strong acid solution, the H_2S and CO_2 go into the gas phase. The H_2S has a strong UV absorbance with almost no IR absorption, and the CO_2

© 2003 by Béla Lipták

has a strong IR absorbance with none in the UV. Therefore, the goal is to inject a known amount of the amine solution into an acid bath and strip the H_2S and CO_2, which, when sent to a UV and IR detector, will provide the required information.

This was achieved by sending the amine stream through a ten-port valve filling the sample loop. In fact, two loops were used, one for the amine coming from the contactor and one for the amine from the stripper. The loops were sized so that each would contain about the same amount of H_2S under normal operation. Periodically, the valve turned, allowing water to carry one of the loops of the aqueous amine to the acid bath. The bath was stripped with nitrogen to mix the solutions and force the gases past the UV and IR detectors.

To avoid excess corrosion while obtaining a fast reaction, 3N H_2SO_4 was used as the acid. While this product was developed at Amoco and they hold the patent on it, Hamilton Sundstrand (Orbital) now has the rights to make and sell it. It should be noted that a small amount of H_2S is released in this analysis and should be vented to a safe place.

Calibration One of the problems with on-line analyzers is that they need calibration. With the H_2S/CO_2 amine analyzer, we chose Solutions Plus Inc.[2] to make us basic NaOH solutions of Na_2S and Na_2CO_3. When these solutions hit the acid, H_2S and CO_2 are released to calibrate the system, yet the method provides an aqueous system that is stable.

Unfortunately, there are not many process FIAs on the market.[3] Most process FIAs are now built to solve a problem that needs to be solved by whatever company has the problem.

References

1. International Forum for Process Analytical Chemistry, www.ifpac.com, (847) 548–1800.
2. Solutions Plus Inc., St. Louis, MO, (636) 349-4922, solnplus@accessus.net.
3. Global FIA, (253) 549-2223, info@globalfia.com (company produces only process FIAs).

Bibliography

DuCross, M. J. F., Automatic methods for assessing water quality come of age, *Environ. Sci. Technol.*, Oct. 1975.

Kalis, G., How accurate is your on-line pH analyzer? *InTech*, 37(6), June 1990.

LeBlanc, M., Is on-line titration the answer? *InTech*, Feb. 1989.

McMillan, G. K., *A Funny Thing Happened on the Way to the Control Room*, ISA, Research Triangle Park, NC, 1989, 55–64.

McMillan, G. K., Woody's performance review—what's inline next for pH control? *InTech*, 35(1), Jan. 1998.

Mooney, E. F., On-line photometric titrations for process control, *Proc. ISA Conference*, Houston, TX, Oct. 1992.

Moore, R. L., Good pH Measurements in Bad Process Streams, *Instrum. Control Sys*., 63(12), 39–43, 1990.

Piovoso, M. J. and Williams, J. M., Self tuning pH control, *InTech*, May 1985.

© 2003 by Béla Lipták

Appendix

A.1
International System of Units 1767

International System of Units (Table A.1a) 1768
Alphabetical List of Units (Symbols of SI units given in parentheses) (Table A.1b) 1769

A.2
Engineering Conversion Factors 1777

Conversion Factors (Table A.2a) 1777
Units of Area (Table A.2b) 1788
Units of Density (Table A.2c) 1788
Units of Work, Energy, Heat (Table A.2d) 1788
Units of Mass Flow (Table A.2e) 1788
Units of Volume Flow (Table A.2f) 1788
Units of Length (Table A.2g) 1788
Linear Conversion (Table A.2h) 1789
Units of Power (Table A.2i) 1790
Units of Pressure (Table A.2j) 1790
Pressure Conversion (Table A.2k) 1791
Pressure Head Conversion (Table A.2l) 1792
Temperature Conversion (Table A.2m) 1793
Units of Time (Table A.2n) 1793
Units of Velocity (Table A.2o) 1793
Viscosity Conversion (Table A.2p) 1794
Viscosity Conversion Chart (Table A.2q) 1796
Approximate Viscosity Conversion Chart (Table A.2r) 1797
Units of Volume (Table A.2s) 1798
Units of Weight (Table A.2t) 1798
Weight Conversion (Table A.2u) 1798

A.3
Chemical Resistance of Materials 1799

Chemical Resistance of Materials (Table A.3a) 1800

A.4
Composition of Metallic and Other Materials 1806

Composition of Metallic and Other Materials (Table A.4a) 1806

A.5
Steam and Water Tables 1809

Dry Saturated Steam: Temperature Table (Table A.5a) 1810
Properties of Superheated Steam (Table A.5b) 1812
Properties of Water at Various Temperatures from 40 to 540°F (4.4 to 282.2°C) (Table A.5c) 1816

A.6
Friction Loss in Pipes 1817

Friction Loss Modulus for 100 ft of 1 in. Steel Pipe (Figure A.6a) 1818
Friction Loss Modulus for 100 ft of 1.5 in. Steel Pipe (Figure A.6b) 1818
Friction Loss Modulus for 100 ft of 2 in. Steel Pipe (Figure A.6c) 1819
Friction Loss Modulus for 100 ft of 3 in. Steel Pipe (Figure A.6d) 1819
Friction Loss Modulus for 100 ft of 4 in. Steel Pipe (Figure A.6e) 1820

© 2003 by Béla Lipták

Friction Loss Modulus for 100 ft of 6 in. Steel Pipe (Figure A.6f) 1820

A.7
Tank Volumes 1821

Capacity of Round Tanks (per foot of depth) (Table A.7a) 1821
Capacity of Partially Filled Horizontal Tanks (Table A.7b) 1822
Capacities of Various Cylinders in U.S. Gallons (Table A.7c) 1823

A.8
Directory of "Lost" Companies 1824

Introduction 1824
Alphabetic Listing of "Lost Companies" (Table A.8a) 1825

© 2003 by Béla Lipták

A.1 International System of Units

The decimal system of units was conceived in the 16th century when there was a great confusion and jumble of units of weights and measures. It was not until 1790, however, that the French National Assembly requested the French Academy of Sciences to work out a system of units suitable for adoption by the entire world. This system, based on the meter (metre) as a unit of length and the gram as a unit of mass, was adopted as a practical measure to benefit industry and commerce. Physicists soon realized its advantages and it was adopted also in scientific and technical circles. The importance of the regulation of weights and measures was recognized in Article 1, Section 8, when the U.S. Constitution was written in 1787, but the metric system was not legalized in this country until 1866. In 1893, the international meter and kilogram became the fundamental standards of length and mass in the United States, both for metric and customary weights and measures. The tables of conversion factors presented here are intended to serve two purposes:

1. To express the definitions of miscellaneous units of measure as exact numeral multiples of coherent "metric" units. Relationships that are exact in terms of the base unit are followed by an asterisk. Relationships that are not followed by an asterisk are either the results of physical measurements or are only approximate.
2. To provide multiplying factors for converting expressions of measurements given by numbers and miscellaneous units to corresponding new numbers and metric units.

Conversion factors are presented for ready adaptation to computer readout and electronic data transmission. The factors are written as a number equal to or greater than 1 and less than 10 with six or fewer decimal places. This number is followed by the letter E (for exponent), a plus or minus symbol, and two digits that indicate the power of 10 by which the number must be multiplied to obtain the correct value. For example:

$$3.523\ 907\ \text{E}{-02}\ \text{is}\ 3.523\ 907 \times 10^{-2}$$

or

$$0.035\ 239\ 07$$

Similarly,

$$3.386\ 389\ \text{E}{+03}\ \text{is}\ 3.386\ 389 \times 10^{3}$$

or

$$3\ 386.389$$

An asterisk (*) after the sixth decimal place indicates that the conversion factor is exact and that all subsequent digits are zero.

When a figure is to be rounded to fewer digits than the total number available, the procedure should be as follows:

1. When the first digit discarded is less than 5, the last digit retained should not be changed. For example, 3.463 25, if rounded to four digits, would be 3.463; if rounded to three digits, 3.46.
2. When the first digit discarded is greater than or if it is a 5, followed by at least one digit other than 0, the last figure retained should be increased by one unit. For example 8.376 52, if rounded to four digits, would be 8.377; if rounded to three digits, 8.38.
3. When the first digit discarded is exactly 5, followed only by zeros, the last digit retained should be rounded upward if it is an odd number, but no adjustment made if it is an even number. For example, 4.365, when rounded to three digits, becomes 4.36. The number 4.355 would also round to the same value, 4.36, if rounded to three digits.

Where fewer than six decimal places is shown, more precision is not warranted.

© 2003 by Béla Lipták

TABLE A.1a
International System of Units

Quantity	*Unit*	*SI Symbol*	*Formula*
	Base Units		
length	meter	m	—
mass	kilogram	kg	—
time	second	s	—
electric current	ampere	A	—
thermodynamic temperature	kelvin	K	—
amount of substance	mole	mol	—
luminous intensity	candela	cd	—
	Supplementary Units		
plane angle	radian	rad	—
solid angle	steradian	sr	—
	Derived Units		
acceleration	meter per second squared	—	m/s^2
activity (of a radioactive source)	disintegration per second	—	(disinte-gration)/s
angular acceleration	radian per second squared	—	rad/s^2
angular velocity	radian per second	—	rad/s
area	square meter	—	m^2
density	kilogram per cubic meter	—	kg/m^3
electric capacitance	farad	F	A·s/V
electrical conductance	siemens	S	A/V
electric field strength	volt per meter	—	V/m
electric inductance	henry	H	V·s/A
electric potential difference	volt	V	W/A
electric resistance	ohm	Ω	V/A
electromotive force	volt	V	W/A
energy	joule	J	N·m
entropy	joule per kelvin	—	J/K
force	newton	N	$kg·m/s^2$
frequency	hertz	Hz	(cycle)/s
illuminance	lux	lx	lm/m^2
luminance	candela per square meter	—	cd/m^2
luminous flux	lumen	lm	cd·sr
magnetic field strength	ampere per meter	—	A/m
magnetic flux	weber	Wb	V·s
magnetic flux density	telsa	T	Wb/m^2
magnetomotive force	ampere	A	—
power	watt	W	J/s
pressure	pascal	Pa	N/m^2
quantity of electricity	coulomb	C	A·s
quantity of heat	joule	J	N·m
radiant intensity	watt per steradian	—	W/sr
specific heat	joule per kilogram-kelvin	—	J/kg·K
stress	pascal	Pa	N/m^2
thermal conductivity	watt per meter-kelvin	—	W/m·K
velocity	meter per second	—	m/s
viscosity, dynamic	pascal-second	—	Pa·s
viscosity, kinematic	square meter per second	—	m^2/s
voltage	volt	V	W/A
volume	cubic meter	—	m^3
wavenumber	reciprocal meter	—	(wave)/m
work	joule	J	N·m

© 2003 by Béla Lipták

TABLE A.1b

Alphabetical List of Units (Symbols of SI units given in parentheses)

To convert from	*To*	*Multiply by*
	A	
abampere	ampere (A)	1.000 000*E+01
abcoulomb	coulomb (C)	1.000 000*E+01
abfarad	farad (F)	1.000 000*E+09
abhenry	henry (H)	1.000 000*E+09
abmho	siemens (S)	1.000 000*E+09
abohm	ohm (Ω)	1.000 000*E+09
abvolt	volt (V)	1.000 000*E+08
acre foot (U.S. survey)[a]	meter^3 (m^3)	1.233 489 E+03
acre (U.S. survey)[a]	meter^2 (m^2)	4.046 873 E+03
ampere hour	coulomb (C)	3.600 000*E+03
are	meter^2 (m^2)	1.000 000*E+02
angstrom	meter (m)	1.000 000*E−10
astronomical unit	meter (m)	1.495 979 E+11
atmosphere (standard)	pascal (Pa)	1.013 250*E+05
atmosphere (technical = 1 kgf/cm^2)	pascal (Pa)	9.806 650*E+04
	B	
bar	pascal (Pa)	1.000 000*E+05
barn	meter^2 (m^2)	1.000 000*E−28
barrel (for petroleum, 42 gal)	meter^3(m^3)	1.589 873 E−01
board foot	meter^3(m^3)	2.359 737 E−03
British thermal unit (International Table)[b]	joule (J)	1.055 056 E+03
British thermal unit (mean)	joule (J)	1.055 87 E+03
British thermal unit (thermochemical)	joule (J)	1.054 350 E+03
British thermal unit (39°F)	joule (J)	1.059 67 E+03
British thermal unit (59°F)	joule (J)	1.054 80 E+03
British thermal unit (60°F)	joule (J)	1.054 68 E+03
Btu (International Table) · ft/h · ft^2 · °F (*k*, thermal conductivity)	watt per meter-kelvin (W/m·K)	1.730 735 E+00
Btu (thermochemical) · ft/h · ft^2 · °F (*k*, thermal conductivity)	watt per meter-kelvin (W/m·K)	1.729 577 E+00
Btu (International Table) · in./h · ft^2 · °F (*k*, thermal conductivity)	watt per meter-kelvin (W/m·K)	1.442 279 E−01
Btu (thermochemical) · in./h · ft^2 · °F (*k*, thermal conductivity)	watt per meter-kelvin (W/m·K)	1.441 314 E−01
Btu (International Table) · in./s · ft^2 · °F (*k*, thermal conductivity)	watt per meter-kelvin (W/m·K)	5.192 204 E+02
Btu (thermochemical) · in./s · ft^2 · °F (*k*, thermal conductivity)	watt per meter-kelvin (W/m·K)	5.188 732 E+02
Btu (International Table)/h	watt (W)	2.930 711 E−01
Btu (International Table)/s	watt (W)	1.055 056 E+03
Btu (thermochemical)/h	watt (W)	2.928 751 E+01
Btu (thermochemical)/min	watt (W)	1.757 250 E+01
Btu (thermochemical)/s	watt (W)	1.054 350 E+03
Btu (International Table)/ft^2	joule per meter^2 (J/m^2)	1.135 653 E+04

[a]Since 1893, the U.S. basis of length measurement has been derived from metric standards. In 1959, a small refinement was made in the definition of the yard to resolve discrepancies both in this country and abroad, which changed its length from 3600/3937 m to 0.9144 m exactly. This resulted in the new value being shorter by two parts in a million.

At the same time it was decided that any data in feet derived from and published as a result of geodetic surveys within the United States would remain with the old standard (1 ft = 1200/3937 m) until further decision. This foot is named the U.S. survey foot.

As a result all U.S. land measurements in U.S. customary units will relate to the meter by the old standard. All the conversion factors in these tables for units referenced to this footnote are based on the U.S. survey foot, rather than the international foot.

Conversion factors for the land measures given below may be determined from the following relationships:

1 league = 3 miles (exactly)
1 rod = $16^1/_2$ feet (exactly)
1 section = 1 square mile (exactly)
1 township = 36 square miles (exactly)
1 chain = 66 feet (exactly)

[b]This value was adopted in 1956. Some of the older International Tables use the value 1.055 04 E+03. The exact conversion factor is 1.055 055 852 62*E+03.

© 2003 by Béla Lipták

TABLE A.1b Continued

Alphabetical List of Units (Symbols of SI units given in parentheses)

To convert from	*To*	*Multiply by*
Btu (thermochemical)/ft^2	joule per meter^2 (J/m^2)	1.134 893 E+04
Btu (thermochemical)/ft^2 · h	watt per meter^2 (W/m^2)	3.152 481 E+00
Btu (thermochemical)/ft^2 · min	watt per meter^2 (W/m^2)	1.891 489 E+02
Btu (thermochemical)/ft^2 · s	watt per meter^2 (W/m^2)	1.134 893 E+04
Btu (thermochemical)/in.^{2} · s	watt per meter^2 (W/m)^2	1.634 246 E+06
Btu (International Table)/h · ft^2 · °F (*C*, thermal conductance)	watt per meter^2-kelvin (W/m^2 · K)	5.678 263 E+00
Btu (thermochemical)/h · ft^2 · °F (*C*, thermal conductance)	watt per meter^2-kelvin (W/m^2 · K)	5.674 466 E+00
Btu (International Table)/s · ft^2 · °F	watt per meter^2-kelvin (W/m^2 · K)	2.044 175 E+04
Btu (thermochemical)/ s · ft^2 · °F	watt per meter^2-kelvin (W/m^2 · K)	2.042 808 E+04
Btu (International Table)/lb	joule per kilogram (J/kg)	2.326 000*E+03
Btu (thermochemical)/lb	joule per kilogram (J/kg)	2.324 444 E+03
Btu (International Table)/lb · °F (*c*, heat capacity)	joule per kilogram-kelvin (J/kg · K)	4.186 800*E+03
Btu (thermochemical)/lb · °F (*c*, heat capacity)	joule per kilogram-kelvin (J/kg · K)	4.184 000 E+03
bushel (U.S.)	meter^3 (m^3)	3.523 907 E–02
	C	
caliber (inch)	meter (m)	2.540 000*E–02
calorie (International Table)	joule (J)	4.186 800*E+00
calorie (mean)	joule (J)	4.190 02 E+00
calorie (thermochemical)	joule (J)	4.184 000*E+00
calorie (15°C)	joule (J)	4.185 80 E+00
calorie (20°C)	joule (J)	4.181 90 E+00
calorie (kilogram, International Table)	joule (J)	4.186 800*E+03
calorie (kilogram, mean)	joule (J)	4.190 02 E+03
calorie (kilogram, thermochemical)	joule (J)	4.184 000*E+03
cal (thermochemical)/cm^2	joule per meter^2 (J/m^2)	4.184 000*E+04
cal (International Table)/g	joule per kilogram (J/kg)	4.186 800*E+03
cal (thermochemical)/g	joule per kilogram (J/kg)	4.184 000*E+03
cal (International Table)/g · °C	joule per kilogram-kelvin (J/kg · K)	4.186 800*E+03
cal (thermochemical)/g · °C	joule per kilogram-kelvin (J/kg · K)	4.184 000*E+08
cal (thermochemical)/min	watt (W)	6.973 333 E–02
cal (thermochemical)/s	watt (W)	4.184 000*E+00
cal (thermochemical)/cm^2 · min	watt per meter^2 (W/m^2)	6.973 333 E+02
cal (thermochemical)/cm^2 · s	watt per meter^2 (W/m^2)	4.184 000*E+04
cal (thermochemical)/cm · s · °C	watt per meter-kelvin (W/m · K)	4.184 000*E+02
carat (metric)	kilogram (kg)	2.000 000*E–04
centimeter of mercury (0°C)	pascal (Pa)	1.333 22 E+03
centimeter of water (4°C)	pascal (Pa)	9.806 38 E+01
centipoise	pascal second (Pa · s)	1.000 000*E–03
centistokes	meter^2 per second (m^2/s)	1.000 000*E–06
circular mil	meter^2 (m^2)	5.067 075 E–10
clo	kelvin meter^2 per watt (K · m^2/W)	2.003 712 E–01
cup	meter^3 (m^3)	2.365 882 E–04
curie	becquerel (Bq)	3.700 000*E+10
	D	
day (mean solar)	second (s)	8.640 000 E+04
day (sidereal)	second (s)	8.616 409 E+04
degree (angle)	radian (rad)	1.745 329 E–02
degree Celsius	Kelvin (K)	

© 2003 by Béla Lipták

degree centigrade	[see footnote c]	$t_K = t_{°C}+273.15$
degree Fahrenheit	degree Celsius	$t_{°C} = (t_{°F}-32)/1.8$
degree Fahrenheit	kelvin (K)	$t_K = (t_{°F}+459.67)/1.8$
degree Rankine	kelvin (K)	$t_K = t_{°R}/1.8$
°F · h · ft^2/Btu (International Table) (*R*, thermal resistance)	kelvin meter^2 per watt (K·m^2/W)	1.761 102 E–01
°F · h·ft^2/Btu (thermochemical (*R*, thermal resistance)	kelvin meter^2 per watt (K·m^2/W)	1.762 280 E–01
denier	kilogram per meter (kg/m)	1.111 111 E–07
dyne	newton (N)	1.000 000*E–05
dyne/cm	newton meter (N·m)	1.000 000*E–07
dyne/cm^2	pascal (Pa)	1.000 000*E–01
	E	
electronvolt	joule (J)	1.602 19 E–19
EMU of capacitance	farad (F)	1.000 000*E+09
EMU of current	ampere (A)	1.000 000*E+01
EMU of electric potential	volt (V)	1.000 000*E–08
EMU of inductance	henry (H)	1.000 000*E–09
EMU of resistance	ohm (Ω)	1.000 000*E–09
ESU of capacitance	farad (F)	1.112 650 E–12
ESU of current	ampere (A)	3.335 6 E–10
ESU of electric potential	volt (V)	2.997 9 E+02
ESU of inductance	henry (H)	8.987 554 E+11
ESU of resistance	ohm (Ω)	8.987 554 E+11
erg/(cm^2 · s)	watt per meter^2 (W/m^2)	1.000 000*E–03
erg/s	watt (W)	1.000 000*E–07
erg	joule (J)	1.000 000*E–07
	F	
faraday (based on carbon-12)	coulomb (C)	9.648 70 E+04
faraday (chemical)	coulomb (C)	9.649 57 E+04
faraday (physical)	coulomb (C)	9.652 19 E+04
fathom	meter (m)	1.828 8 E+00
fermi (femtometer)	meter (m)	1.000 000*E–15
fluid ounce (U.S.)	meter^3 (m^3)	2.957 353 E–05
foot	meter (m)	3.048 000*E–01
foot (U.S. survey)[a]	meter (m)	3.048 006 E–01
foot of water (39.2°F)	pascal (Pa)	2.988 98 E+03
ft^2	meter^2 (m^2)	9.290 304*E–02
ft^2/h (thermal diffusivity)	meter^2 per second (m^2/s)	2.580 640*E–05
ft^2/s	meter^2 per second (m^2/s)	9.290 304*E–02
ft^3 (volume; section modulus)	meter^3 (m^3)	2.831 685 E–02
ft^3/min	meter^3 per second (m^3/s)	4.719 474 E–04
ft^3/s	meter^3 per second (m^3/s)	2.831 685 E–02
ft^4 (moment of section)[d]	meter^4 (m^4)	8.630 975 E–03
ft/h	meter per second (m/s)	8.466 667 E–05
ft/min	meter per second (m/s)	5.080 000*E–03
ft/s	meter per second (m/s)	3.048 000*E–01
ft/s^2	meter per second^2 (m/s^2)	3.048 000*E–01
footcandle	lux (lx)	1.076 391 E+01
footlambert	candela per meter^2 (cd/m^2)	3.426 259 E+00

[c]The SI unit of thermodynamic temperature is the kelvin (K), and this unit is properly used for expressing thermodynamic temperature and temperature intervals. Wide use is also made of the degree Celsius (°C), which is the SI unit for expressing Celsius temperature and temperature intervals. The Celsius scale (formerly called centigrade) is related directly to thermodynamic temperature (kelvins) as follows:

1. The temperature interval one degree Celsius equals one kelvin exactly.
2. Celsius temperature (t) is related to thermodynamic temperature (*T*) by the equation $t = T - T_0$, where $T_0 = 273.15$ K by definition.

[d]This is sometimes called the moment of inertia of a plane section about a specified axis.

© 2003 by Béla Lipták

TABLE A.1b Continued

Alphabetical List of Units (Symbols of SI units given in parentheses)

To convert from	*To*	*Multiply by*
ft·lbf	joule (J)	1.355 818 E+00
ft·lbf/h	watt (W)	3.766 161 E–04
ft·lbf/min	watt (W)	2.259 697 E–02
ft·lbf/s	watt (W)	1.355 818 E+00
ft·poundal	joule (J)	4.214 011 E–02
free fall, standard (g)	meter per second^2 (m/s^2)	9.806 650*E+00
G		
gal	meter per second^2 (m/s^2)	1.000 000*E–02
gallon (Canadian liquid)	meter^3 (m^3)	4.546 090 E–03
gallon (U.K. liquid)	meter^3 (m^3)	4.546 092 E–03
gallon (U.S. dry)	meter^3 (m^3)	4.404 884 E–03
gallon (U.S. liquid)	meter^3 (m^3)	3.785 412 E–03
gallon (U.S. liquid) per day	meter^3 per second (m^3/s)	4.381 264 E–08
gallon (U.S. liquid) per minute	meter^3 per second (m^3/s)	6.309 020 E–05
gallon (U.S. liquid) per hp·h (SFC, specific fuel consumption)	meter^3 per joule (m^3/J)	1.410 089 E–09
gamma	tesla (T)	1.000 000*E–09
gauss	tesla (T)	1.000 000*E–04
gilbert	ampere (A)	7.957 747 E–01
gill (U.K.)	meter^3 (m^3)	1.420 654 E–04
gill (U.S.)	meter^3 (m^3)	1.182 941 E–04
grad	degree (angular)	9.000 000*E–01
grad	radian (rad)	1.570 796 E–02
grain (1/7000 lb avoirdupois)	kilogram (kg)	6.479 891*E–05
grain (lb avoirdupois/7000)/gal (U.S. liquid)	kilogram per meter^3 (kg/m^3)	1.711 806 E–02
gram	kilogram (kg)	1.000 000*E–03
g/cm^3	kilogram per meter^3 (kg/m^3)	1.000 000*E+03
gram-force/cm^2	pascal (Pa)	9.806 650*E+01
H		
hectare	meter^2 (m^2)	1.000 000*E+04
horsepower (550 ft·lbf/s)	watt (W)	7.456 999 E+02
horsepower (boiler)	watt (W)	9.809 50 E+03
horsepower (electric)	watt (W)	7.460 000*E+02
horsepower (metric)	watt (W)	7.354 99 E+02
horsepower (water)	watt (W)	7.460 43 E+02
horsepower (U.K.)	watt (W)	7.457 0 E+02
hour (mean solar)	second (s)	3.600 000 E+03
hour (sidereal)	second (s)	3.590 170 E+03
hundredweight (long)	kilogram (kg)	5.080 235 E+01
hundredweight (short)	kilogram (kg)	4.535 924 E+01
I		
inch	meter (m)	2.540 000*E–02
inch of mercury (32°F)	pascal (Pa)	3.386 38 E+03
inch of mercury (60°F)	pascal (Pa)	3.376 85 E+03
inch of water (39.2°F)	pascal (Pa)	2.490 82 E+03
inch of water (60°F)	pascal (Pa)	2.488 4 E+02
in.^{2}	meter^2 (m^2)	6.451 600*E–04
in.^{3} (volume; section modulus)[e]	meter^3 (m^3)	1.638 706 E–05
in.^{3}/min	meter^3 per second (m^3/s)	2.731 177 E–07
in.^{4} (moment of section)^4	meter^4 (m^4)	4.162 314 E–07
in./s	meter per second (m/s)	2.540 000*E–02
in./s^2	meter per second^2 (m/s^2)	2.540 000*E–02
K		
kayser	1 per meter (1/m)	1.000 000*E+02
kelvin	degree Celsius	$t_{°C} = t_K - 273.15$
kilocalorie (International Table)	joule (J)	4.186 800*E+03

[e]The exact conversion factor is 1.638 706 4*E–05.

© 2003 by Béla Lipták

kilocalorie (mean)	joule (J)	4.190 02 E+03
kilocalorie (thermochemical)	joule (J)	4.184 000*E+03
kilocalorie (thermochemical)/min	watt (W)	6.973 333 E+01
kilocalorie (thermochemical)/s	watt (W)	4.184 000*E+03
kilogram-force (kgf)	newton (N)	9.806 650*E+00
kgf·m	newton meter (N·m)	9.806 650*E+00
kgf·s^2/m (mass)	kilogram (kg)	9.806 650*E+00
kgf/cm^2	pascal (Pa)	9.806 650*E+04
kgf/m^2	pascal (Pa)	9.806 650*E+00
kgf/mm^2	pascal (Pa)	9.806 650*E+06
km/h	meter per second (m/s)	2.777 778 E–01
kilopond	newton (N)	9.806 650*E+00
kW·h	joule (J)	3.600 000*E+06
kip (1000 lbf)	newton (N)	4.448 222 E+03
kip/in^2 (ksi)	pascal (Pa)	6.894 757 E+06
knot (international)	meter per second (m/s)	5.144 444 E–01
	L	
lambert	candela per meter^2 (cd/m^2)	$1/\pi$ *E+04
lambert	candela per meter^2 (cd/m^2)	3.183 099 E+03
langley	joule per meter^2 (J/m^2)	4.184 000*E+04
league	meter (m)	[see footnote a]
light year	meter (m)	9.460 55 E+15
liter[f]	meter^3 (m^3)	1.000 000*E–03
	M	
maxwell	weber (Wb)	1.000 000*E–08
mho	siemens (S)	1.000 000*E+00
microinch	meter (m)	2.540 000*E–08
micron	meter (m)	1.000 000*E–06
mil	meter (m)	2.540 000*E–05
mile (international)	meter (m)	1.609 344*E+03
mile (statute)	meter (m)	1.609 3 E+03
mile (U.S. survey)[a]	meter (m)	1.609 347 E+03
mile (international nautical)	meter (m)	1.852 000*E+03
mile (U.K. nautical)	meter (m)	1.853 184*E+03
mile (U.S. nautical)	meter (m)	1.852 000*E+03
mi^2 (international)	meter^2 (m^2)	2.589 988 E+06
mi^2 (U.S. survey)[a]	meter^2 (m^2)	2.589 998 E+06
mi/h (international)	meter per second (m/s)	4.470 400*E–01
mi/h (international)	kilometer per hour (km/h)	1.609 344*E+01
mi/min (international)	meter per second (m/s)	2.682 240*E+01
mi/s (international)	meter per second (m/s)	1.609 344*E+03
millibar	pascal (Pa)	1.000 000*E+02
millimeter of mercury (0°C)	pascal (Pa)	1.333 22 E+02
minute (angle)	radian (rad)	2.908 882 E–04
minute (mean solar)	second (s)	6.000 000 E+01
minute (sidereal)	second (s)	5.983 617 E+01
month (mean calendar)	second (s)	2.628 000 E+06
	O	
oersted	ampere per meter (A/m)	7.957 747 E+01
ohm centimeter	ohm meter (Ω·m)	1.000 000*E–02
ohm circular-mill per foot	ohm millimeter^2 per meter (Ω·mm^2/m)	1.662 426 E–03
ounce (avoirdupois)	kilogram (kg)	2.834 952 E–02
ounce (troy or apothecary)	kilogram (kg)	3.110 348 E–02
ounce (U.K. fluid)	meter^3 (m^3)	2.841 307 E–05
ounce (U.S. fluid)	meter^3 (m^3)	2.957 353 E–05
ounce-force	newton (N)	2.780 139 E–01
ozf·in.	newton meter (N·m)	7.061 552 E–03

[f] In 1964 the General Conference on Weights and Measures adopted the name liter as a special name for decimeter. Prior to this decision the liter differed slightly (previous value, 1.000028 dm^3) and in expression of precision volume measurement this fact must be kept in mind.

© 2003 by Béla Lipták

TABLE A.1b Continued

Alphabetical List of Units (Symbols of SI units given in parentheses)

To convert from	*To*	*Multiply by*
oz (avoirdupois)/gal (U.K. liquid)	kilogram per meter^3 (kg/m^3)	6.236 021 E+00
oz (avoirdupois)/gal (U.S. liquid)	kilogram per meter^3 (kg/m^3)	7.489 152 E+00
oz (avoirdupois)/in^3	kilogram per meter^3 (kg/m^3)	1.729 994 E+03
oz (avoirdupois)/ft^2	kilogram per meter^3 (kg/m^3)	3.051 517 E–01
oz (avoirdupois)/yd^2	kilogram per meter^2 (kg/m^2)	3.390 575 E–02
P		
parsec	meter (m)	3.085 678 E+16
peck (U.S.)	meter^3 (m^3)	8.809 768 E–03
pennyweight	kilogram (kg)	1.555 174 E–03
perm (0°C)	kilogram per pascal second meter^2 (kg/Pa·s·m^2)	5.721 35 E–11
perm (23°C)	kilogram per pascal second meter^2 (kg/Pa·s·m^2)	5.745 25 E–11
	kilogram per pascal second meter (kg/Pa·s·m)	1.453 22 E–12
perm·in. (0°C)	kilogram per pascal second meter (kg/Pa·s·m)	1.453 22 E–12
perm·in. (23°C)	kilogram per pascal second meter (kg/Pa·s·m)	1.459 29 E–12
phot	lumen per meter^2 (lm/m^2)	1.000 000*E+04
pica (printer's)	meter (m)	4.217 518 E–03
pint (U.S. dry)	meter^3 (m^3)	5.506 105 E–04
pint (U.S. liquid)	meter^3 (m^3)	4.731 765 E–04
point (printer's)	meter (m)	3.514 598*E–04
poise (absolute viscosity)	pascal second (Pa·s)	1.000 000*E–01
pound (lb avoirdupois)[g]	kilogram (kg)	4.535 924 E–01
pound (troy or apothecary)	kilogram (kg)	3.732 417 E–01
lb·ft^2 (moment of inertia)	kilogram meter^2 (kg·m^2)	4.214 011 E–02
lb·in.^{2} (moment of inertia)	kilogram meter^2 (kg·m^2)	2.926 397 E–04
lb/ft·h	pascal second (Pa·s)	4.133 789 E–04
lb/ft·s	pascal second (Pa·s)	1.488 164 E+00
lb/ft^2	kilogram per meter^2 (kg/m^2)	4.882 428 E+00
lb/ft^3	kilogram per meter^3 (kg/m^3)	1.601 846 E+01
lb/gal (U.K. liquid)	kilogram per meter^3 (kg/m^3)	9.977 633 E+01
lb/gal (U.S. liquid)	kilogram per meter^3 (kg/m^3)	1.198 264 E+02
lb/h	kilogram per second (kg/s)	1.259 979 E–04
lb/hp·h (SFC, specific fuel consumption)	kilogram per joule (kg/J)	1.689 659 E–07
lb/in.^{3}	kilogram per meter^3 (kg/m^3)	2.767 990 E+04
lb/min	kilogram per second (kg/s)	7.559 873 E–03
lb/s	kilogram per second (kg/s)	4.535 924 E–01
lb/yd^3	kilogram per meter^3 (kg/m^3)	5.932 764 E–01
poundal	newton (N)	1.382 550 E–01
poundal/ft^2	pascal (Pa)	1.488 164 E+00
poundal·s/ft^2	pascal second (Pa·s)	1.488 164 E+00
pound-force (in.f)[h]	newton (N)	4.448 222 E+00
lbf·ft	newton meter (N·m)	1.355 818 E+00

[g]The exact conversion factor is 4.535 923 7*E–01

© 2003 by Béla Lipták

lbf·ft/in.	newton meter per meter (N·m/m)	5.337 866 E+01
lbf·in.	newton meter (N·m)	1.129 848 E–01
lbf·in./in.	newton meter per meter (N·m/m)	4.448 222 E+01
lbf·s/ft^2	pascal second (Pa·s)	4.788 026 E+01
lbf·s/in.^{2}	pascal second (Pa·s)	6.894 757 E+03
lbf/ft	newton per meter (N/m)	1.459 390 E+01
lbf/ft^2	pascal (Pa)	4.788 026 E+01
lbf/in.	newton per meter (N/m)	1.751 268 E+02
lbf/in.^{2} (psi)	pascal (Pa)	6.894 757 E+03
lbf/lb (thrust/weight [mass] ratio)	newton per kilogram (N/kg)	9.806 650 E+00

Q

quart (U.S. dry)	meter^3 (m^3)	1.101 221 E–03
quart (U.S. liquid)	meter^3 (m^3)	9.463 529 E–04

R

rad (radiation dose absorbed)	gray (Gy)	1.000 000*E–02
rhe	1 per pascal second (1/Pa·s)	1.000 000*E+01
rod	meter (m)	[see footnote a]
roentgen	coulomb per kilogram (C/kg)	2.58 E–04

S

second (angle)	radian (rad)	4.848 137 E–06
second (sidereal)	second (s)	9.972 696 E–01
section	meter^2 (m^2)	[see footnote a]
shake	second (s)	1.000 000*E–08
slug	kilogram (kg)	1.459 390 E+01
slug/ft·s	pascal second (Pa·s)	4.788 026 E+01
slug/ft^3	kilogram per meter^3 (kg/m^3)	5.155 788 E+02
statampere	ampere (A)	3.335 640 E–10
statcoulomb	coulomb (C)	3.335 640 E–10
statfarad	farad (F)	1.112 650 E–12
stathenry	henry (H)	8.987 554 E+11
statmho	siemens (S)	1.112 650 E–12
statohm	ohm (Ω)	8.987 665 E+11
statvolt	volt (V)	2.997 925 E+02
stere	meter^3 (m^3)	1.000 000*E–04
stilb	candela per meter^2 (cd/m^2)	1.000 000*E+04
stokes (kinematic viscosity)	meter^2 per second (m^2/s)	1.000 000*E–04

T

tablespoon	meter^3 (m^3)	1.478 676 E–05
teaspoon	meter^3 (m^3)	4.928 922 E–06
tex	kilogram per meter (kg/m)	1.000 000*E–06
therm	joule (J)	1.055 056 E+08
ton (assay)	kilogram (kg)	2.916 667 E–02
ton (long, 2240 lb)	kilogram (kg)	1.016 047 E+03
ton (metric)	kilogram (kg)	1.000 000*E+03
ton (nuclear equivalent of TNT)	joule (J)	4.184 E+09[i]
ton (refrigeration)	watt (W)	3.516 800 E+03
ton (register)	meter^3 (m^3)	2.831 685 E+00
ton (short, 2000 lb)	kilogram (kg)	9.071 847 E+02
ton (long)/yd^3	kilogram per meter^3 (kg/m^3)	1.328 939 E+03
ton (short)/yd^3	kilogram per meter^3 (kg/m^3)	1.186 553 E+03
ton (short)/h	kilogram per second (kg/s)	2.519 958 E–01

[h]The exact conversion factor is 4.448 221 615 260 5*E+00.

[i]Defined (not measured) value.

© 2003 by Béla Lipták

TABLE A.1b Continued

Alphabetical List of Units (Symbols of SI units given in parentheses)

To convert from	*To*	*Multiply by*
ton-force (2000 lbf)	newton (N)	8.896 444 E+03
tonne	kilogram (kg)	1.000 000*E+03
torr (mmHg, 0°C)	pascal (Pa)	1.333 22 E+02
township	meter^2 (m^2)	[see footnote a]
	U	
unit pole	weber (Wb)	1.256 637 E–07
	W	
W·h	joule (J)	3.600 000*E+03
W·s	joule (J)	1.000 000*E+00
W/cm^2	watt per meter^2 (W/m^2)	1.000 000*E+04
W/in.^{2}	watt per meter^2 (W/m^2)	1.550 003 E+03
	Y	
yard	meter (m)	9.144 000*E–01
yd^2	meter^2 (m^2)	8.361 274 E–01
yd^3	meter^3 (m^3)	7.645 549 E–01
yd^3/min	meter^3 per second (m^3/s)	1.274 258 E–02
year (365 days)	second (s)	3.153 600 E+07
year (sidereal)	second (s)	3.155 815 E+07
year (tropical)	second (s)	3.155 693 E+07

© 2003 by Béla Lipták

A.2 Engineering Conversion Factors

TABLE A.2a
Conversion Factors

To Convert	Into	Multiply by
	A	
abcoulomb	statcoulombs	2.998×10^{10}
acre	sq chain (Gunters)	10
acre	rods	160
acre	sq links (Gunters)	1×10^{5}
acre	hectare or sq hectometer	0.4047
acres	sq ft	43,560.0
acres	sq meters	4,047.0
acres	sq miles	1.562×10^{-3}
acres	sq yards	4,840.0
acre-feet	cubic ft	43,560.0
acre-feet	gallons	3.259×10^{5}
amperes/sq cm	amps/sq in.	6.452
amperes/sq cm	amps/sq meter	10^{4}
amperes/sq in.	amps/sq cm	0.1550
amperes/sq in.	amps/sq meter	1,550.0
amperes/sq meter	amps/sq cm	10^{-4}
amperes/sq meter	amps/sq in.	6.452×10^{-4}
ampere-hours	coulombs	3,600.0
ampere-hours	farads	0.03731
ampere-turns	gilberts	1.257
ampere-turns/cm	amp-turns/in.	2.540
ampere-turns/cm	amp-turns/meter	100.0
ampere-turns/cm	gilberts/cm	1.257
ampere-turns/in.	amp-turns/cm	0.3937
ampere-turns/in.	amp-turns/meter	39.37
ampere-turns/in.	gilberts/cm	0.4950
ampere-turns/meter	amp/turns/cm	0.01
ampere-turns/meter	amp-turns/in.	0.0254
ampere-turns/meter	gilberts/cm	0.01257
angstrom unit	in.	$3{,}937 \times 10^{-9}$
angstrom unit	meter	1×10^{-10}
angstrom unit	micron or μm	1×10^{-4}
are	acre (U.S.)	0.02471
ares	sq yards	119.60
ares	acres	0.02471
ares	sq meters	100.0
Astronomical unit	kilometers	1.495×10^{8}
atmospheres	ton/sq in.	0.007348
atmospheres	cm of mercury	76.0
atmospheres	ft of water (at 4°C)	33.90
atmospheres	in. of mercury (at 0°C)	29.92
atmospheres	kg/sq cm	1.0333
atmospheres	kg/sq meter	10,332.0
atmospheres	pounds/sq in.	14.70
atmospheres	tons/sq ft	1.058
	B	
barrels (U.S., dry)	cubic in.	7056.0
barrels (U.S., dry)	quarts (dry)	105.0
barrels (U.S., liquid)	gallons	31.5
barrels (oil)	gallons (oil)	42.0
bars	atmospheres	0.9869
bars	dynes/sq cm	10^{6}
bars	kg/sq meter	1.020×10^{4}
bars	pounds/sq ft	2,089.0
bars	pounds/sq in.	14.50
baryl	dyne/sq cm	1.000
bolt (U.S. cloth)	meters	36.576
Btu	liter-atmosphere	10.409
Btu	ergs	1.0550×10^{10}
Btu	foot-lb	778.3
Btu	gram-calories	252.0
Btu	horsepower-hr	3.931×10^{-4}
Btu	joules	1,054.8
Btu	kilogram-calories	0.2520
Btu	kilogram-meters	107.5
Btu	kilowatt-hr	2.928×10^{-4}
Btu/hr	foot-pounds/sec	0.2162

© 2003 by Béla Lipták

TABLE A.2a Continued
Conversion Factors

To Convert	Into	Multiply by
Btu/hr	gram-cal/sec	0.0700
Btu/hr	horsepower-hr	3.929×10^{-4}
Btu/hr	watts	0.2931
Btu/min	foot-lb/sec	12.96
Btu/min	horsepower	0.02356
Btu/min	kilowatts	0.01757
Btu/min	watts	17.57
Btu/sq ft/min	watts/sq in.	0.1221
bucket (Br. dry)	cubic cm	1.818×10^{4}
bushels	cubic ft	1.2445
bushels	cubic in.	2,150.4
bushels	cubic meters	0.03524
bushels	liters	35.24
bushels	pecks	4.0
bushels	pints (dry)	64.0
bushels	quarts (dry)	32.0
	C	
calories, gram (mean)	Btu (mean)	3.9685×10^{-3}
candle/sq cm	lamberts	3.142
candle/sq in.	lamberts	0.4870
centares (centiares)	sq meters	1.0
Centigrade	Fahrenheit	$(C° \times 9/5) + 32$
centigrams	grams	0.01
centiliter	ounce fluid (U.S.)	0.3382
centiliter	cubic in.	0.6103
centiliter	drams	2.705
centiliters	liters	0.01
centimeters	feet	3.281×10^{-2}
centimeters	inches	0.3937
centimeters	kilometers	10^{-5}
centimeters	meters	0.01
centimeters	miles	6.214×10^{-6}
centimeters	millimeters	10.0
centimeters	miles	393.7
centimeters	yards	1.094×10^{-2}
centimeter-dynes	cm-grams	1.020×10^{-3}
centimeter-dynes	meter-kg	1.020×10^{-8}
centimeter-dynes	pound-feet	7.376×10^{-8}
centimeter-grams	cm-dynes	980.7
centimeter-grams	meter-kg	10^{-5}
centimeter-grams	pound-feet	7.233×10^{-5}
centimeters of mercury	atmospheres	0.01316
centimeters of mercury	feet of water	0.4461
centimeters of mercury	kg/sq meter	136.0
centimeters of mercury	pounds/sq ft	27.85
centimeters of mercury	pounds/sq in.	0.1934
centimeters/sec	feet/min	1.1969
centimeters/sec	feet/sec	0.03281
centimeters/sec	kilometers/hr	0.036
centimeters/sec	knots	0.1943
centimeters/sec	meters/min	0.6
centimeters/sec	miles/hr	0.02237
centimeters/sec	miles/min	3.728×10^{-4}
centimeters/sec/sec	feet/sec/sec	0.03281
centimeters/sec/sec	km/hr/sec	0.036
centimeters/sec/sec	meters/sec/sec	0.01
centimeters/sec/sec	miles/hr/sec	0.02237
chain	inches	792.00
chain	meters	20.12
chains (surveyors' or Gunter's)	yards	22.00
circular mils	sq cms	5.067×10^{-6}
circular mils	sq mils	0.7854
circumference	radians	6.283
circular mils	sq inches	7.854×10^{-7}
cords	cord feet	8
cord feet	cubic feet	16
coulomb	statcoulombs	2.998×10^{9}
coulombs	farads	1.036×10^{-5}
coulombs/sq cm	coulombs/sq in.	64.52
coulombs/sq cm	coulombs/sq meter	10^{4}
coulombs/sq in.	coulombs/sq cm	0.1550
coulombs/sq in.	coulombs/sq meter	1,550.0
coulombs/sq meter	coulombs/sq cm	10^{-4}
coulombs/sq meter	coulombs/sq in.	6.452×10^{-4}
cubic centimeters	cubic ft	3.531×10^{-5}
cubic centimeters	cubic in.	0.06102
cubic centimeters	cubic meters	10^{-6}
cubic centimeters	cubic yards	1.308×10^{-6}
cubic centimeters	gallons (U.S. liq.)	2.642×10^{-4}
cubic centimeters	liters	0.001
cubic centimeters	pints (U.S. liq.)	2.113×10^{-3}
cubic centimeters	quarts (U.S. liq.)	1.057×10^{-3}
cubic feet	bushels (dry)	0.8036
cubic feet	cubic cm	28,320.0
cubic feet	cubic in.	1,728.0

© 2003 by Béla Lipták

TABLE A.2a Continued
Conversion Factors

To Convert	Into	Multiply by
cubic feet	cubic meters	0.02832
cubic feet	cubic yards	0.03704
cubic feet	gallons (U.S. liq.)	7.48052
cubic feet	liters	28.32
cubic feet	pints (U.S. liq.)	59.84
cubic feet	quarts (U.S. liq.)	29.92
cubic feet/min	cubic cm/sec	472.0
cubic feet/min	gallons/sec	0.1247
cubic feet/min	liters/sec	0.4720
cubic feet/min	pounds of water/min	62.43
cubic feet/sec	million gallons/day	0.646317
cubic feet/sec	gallons/min	448.831
cubic inches	cubic cm	16.39
cubic inches	cubic feet	5.787×10^{-4}
cubic inches	cubic meters	1.639×10^{-5}
cubic inches	cubic yards	2.143×10^{-5}
cubic inches	gallons	4.329×10^{-3}
cubic inches	liters	0.01639
cubic inches	mil-feet	1.061×10^{5}
cubic inches	pints (U.S. liq.)	0.03463
cubic inches	quarts (U.S. liq.)	0.01732
cubic meters	bushels (dry)	28.38
cubic meters	cubic cm	10^{6}
cubic meters	cubic ft	35.31
cubic meters	cubic in.	61,023.0
cubic meters	cubic yards	1.308
cubic meters	gallons (U.S. liq.)	264.2
cubic meters	liters	1,000.0
cubic meters	pints (U.S. liq.)	2,113.0
cubic meters	quarts (U.S. liq.)	1,057.0
cubic yards	cubic cms	7.646×10^{5}
cubic yards	cubic ft	27.0
cubic yards	cubic in.	46,656.0
cubic yards	cubic meters	0.7646
cubic yards	gallons (U.S. liq.)	202.0
cubic yards	liters	764.6
cubic yards	pints (U.S. liq.)	1,615.9
cubic yards	quarts (U.S. liq.)	807.9
cubic yards/min	cubic ft/sec	0.45
cubic yards/min	gallons/sec	3.367
cubic yards/min	liters/sec	12.74
	D	
dalton	gram	1.650×10^{-24}
days	seconds	86,400.0
decigrams	grams	0.1
deciliters	liters	0.1
decimeters	meters	0.1
degrees (angle)	quadrants	0.01111
degrees (angle)	radians	0.01745
degrees (angle)	seconds	3,600.0
degrees/sec	radians/sec	0.01745
degrees/sec	revolutions/min	0.1667
degrees/sec	revolutions/sec	2.778×10^{-3}
dekagrams	grams	10.0
dekaliters	liters	10.0
dekameters	meters	10.0
drams (apothecaries' or troy)	ounces (avoirdupois)	0.1371429
drams (apothecaries' or troy)	ounces (troy)	0.125
drams (U.S., fluid or apothecaries)	cubic cm	3.697
drams	grams	1.7718
drams	grains	27.3437
drams	ounces	0.0625
dyne/cm	erg/sq millimeter	0.01
dyne/sq cm	atmospheres	9.869×10^{-7}
dyne/sq cm	inches of mercury at 0°C	2.953×10^{-5}
dyne/sq cm	inches of water at 4°C	4.015×10^{-4}
dynes	grams	1.020×10^{-3}
dynes	joules/cm	10^{-7}
dynes	joules/meter (newtons)	10^{-5}
dynes	kilograms	1.020×10^{-6}
dynes	poundals	7.233×10^{-5}
dynes	pounds	2.248×10^{-6}
dynes/sq cm	bars	10^{-6}
	E	
ell	cm	114.30
ell	in.	45
em, pica	in.	0.167
em, pica	cm	0.4233
erg/sec	dyne-cm/sec	1.000
ergs	Btu	9.480×10^{-11}
ergs	dyne-centimeters	1.0
ergs	foot-pounds	7.367×10^{-8}
ergs	gram-calories	0.2389×10^{-7}
ergs	gram-cm	1.020×10^{-3}
ergs	horsepower-hr	3.7250×10^{-14}

© 2003 by Béla Lipták

TABLE A.2a Continued
Conversion Factors

To Convert	Into	Multiply by
ergs	joules	10^{-7}
ergs	kg-calories	2.389×10^{-11}
ergs	kg-meters	1.020×10^{-8}
ergs	kilowatt-hr	0.2778×10^{-13}
ergs	watt-hours	0.2778×10^{-10}
ergs/sec	Btu/min	$5{,}688 \times 10^{-9}$
ergs/sec	ft-lb/min	4.427×10^{-6}
ergs/sec	ft-lb/sec	7.3756×10^{-8}
ergs/sec	horsepower	1.341×10^{-10}
ergs/sec	kg-calories/min	1.433×10^{-9}
ergs/sec	kilowatts	10^{-10}
	F	
farads	microfarads	10^{6}
farad/sec	ampere (absolute)	9.6500×10^{4}
farads	ampere-hours	26.80
farads	coulombs	9.649×10^{4}
fathom	meter	1.828804
fathoms	feet	6.0
feet	centimeters	30.48
feet	kilometers	3.048×10^{-4}
feet	meters	0.3048
feet	miles (naut.)	1.645×10^{-4}
feet	miles (stat.)	1.894×10^{-4}
feet	millimeters	304.8
feet	mils	1.2×10^{4}
feet of water	atmospheres	0.02950
feet of water	in. of mercury	0.8826
feet of water	kg/sq cm	0.03048
feet of water	kg/sq meter	304.8
feet of water	pounds/sq ft	62.43
feet of water	pounds/sq in.	0.4335
feet/min	cm/sec	0.5080
feet/min	ft/sec	0.01667
feet/min	km/hr	0.01829
feet/min	meters/min	0.3048
feet/min	miles/hr	0.01136
feet/sec	cm/sec	30.48
feet/sec	km/hr	1.097
feet/sec	knots	0.5921
feet/sec	meters/min	18.29
feet/sec	miles/hr	0.6818
feet/sec	miles/min	0.01136
feet/sec/sec	cm/sec/sec	30.48
feet/sec/sec	km/hr/sec	1.097
feet/sec/sec	meters/sec/sec	0.3048
feet/sec/sec	miles/hr/sec	0.6818
feet/100 feet	percent grade	1.0
foot-candle	lumen/sq meter	10.764
foot-pounds	Btu	1.286×10^{-3}
foot-pounds	ergs	1.356×10^{7}
foot-pounds	gram-calories	0.3238
foot-pounds	hp-hr	5.050×10^{-7}
foot-pounds	joules	1.356
foot-pounds	kg-calories	3.24×10^{-4}
foot-pounds	kg-meters	0.1383
foot-pounds	kilowatt-hr	3.766×10^{-7}
foot-pounds/min	Btu/min	1.286×10^{-3}
foot-pounds/min	foot-pounds/sec	0.01667
foot-pounds/min	horsepower	3.030×10^{-5}
foot-pounds/min	kg-calories/min	3.24×10^{-4}
foot-pounds/min	kilowatt	2.260×10^{-5}
foot-pounds/sec	Btu/hr	4.6263
foot/pounds/sec	Btu/min	0.07717
foot-pounds/sec	horsepower	1.818×10^{-3}
foot-pounds/sec	kg-calories/min	0.01945
foot-pounds/sec	kilowatts	1.356×10^{-3}
furlongs	miles (U.S.)	0.125
furlongs	rods	40.0
furlongs	feet	660.0
	G	
gallons	cubic cm	3,785.0
gallons	cubic ft	0.1337
gallons	cubic in.	231.0
gallons	cubic meters	3.785×10^{-3}
gallons	cubic yards	4.951×10^{-3}
gallons	liters	3.785
gallons (liq. Br. Imp.)	gallons (U.S. liq.)	1.20095
gallons (U.S.)	gallons (Imp.)	0.83267
gallons of water	pounds of water	8.3453
gallons/min	cubic ft/sec	2.228×10^{-3}
gallons/min	liters/sec	0.06308
gallons/min	cubic ft/hr	8.0208
gauss	lines/sq in.	6.452
gauss	webers/sq cm	10^{-8}
gauss	webers/sq in.	6.452×10^{-8}
gauss	webers/sq meter	10^{-4}
gilberts	ampere-turns	0.7958
gilberts/cm	amp-turns/cm	0.7958

© 2003 by Béla Lipták

TABLE A.2a Continued
Conversion Factors

To Convert	Into	Multiply by
gilberts/cm	amp-turns/in.	2.021
gilberts/cm	amp-turns/meter	79.58
gills (British)	cubic cm	142.07
gills	liters	0.1183
gills	pints (liq.)	0.25
grade	radian	.01571
grains	drams (avoirdupois)	0.03657143
grains (troy)	grains (avdp.)	1.0
grains (troy)	grams	0.06480
grains (troy)	ounces (avdp.)	2.0833×10^{-3}
grains (troy)	pennyweight (troy)	0.04167
grains/U.S. gal	parts/million	17.118
grains/U.S. gal	pounds/million gal	142.86
grains/Imp. gal	parts/million	14.286
grams	dynes	980.7
grams	grains	15.43
grams	joules/cm	9.807×10^{-5}
grams	joules/meter (newtons)	9.807×10^{-3}
grams	kilograms	0.001
grams	milligrams	1,000.0
grams	ounces (advp.)	0.03527
grams	ounces (troy)	0.03215
grams	poundals	0.07093
grams	pounds	2.205×10^{-3}
grams/cm	pounds/inch	5.600×10^{-3}
grams/cubic cm	pounds/ cubic ft	62.43
grams/cubic cm	pounds/cubic in.	0.03613
grams/cubic cm	pounds/mil-foot	3.405×10^{-7}
grams/liter	grains/gal	58.417
grams/liter	pounds/1,000 gal	8.345
grams/liter	pounds/cubic ft	0.062427
grams/liter	parts/million	1,000.0
grams/sq cm	pounds/sq ft	2.0481
gram-calories	Btu	3.9683×10^{-3}
gram-calories	ergs	4.1868×10^{7}
gram-calories	foot-pounds	3.0880
gram-calories	horsepower-hr	1.5596×10^{-6}
gram-calories	kilowatt-hr	1.1630×10^{-6}
gram-calories	watt-hr	1.1630×10^{-3}
gram-calories/sec	Btu/hr	14.286
gram-centimeters	Btu	9.297×10^{-8}
gram-centimeters	ergs	980.7
gram-centimeters	joules	9.807×10^{-5}
gram-centimeters	kg-cal	2.343×10^{-8}
gram-centimeters	kg-meters	10^{-5}
	H	
hands	centimeters	10.16
hectares	acres	2.471
hectares	sq feet	1.076×10^{5}
hectograms	grams	100.0
hectoliters	liters	100.0
hectometers	meters	100.0
hectowatts	watts	100.0
henries	millihenries	1,000.0
hogsheads (British)	cubic ft	10.114
hogsheads (U.S.)	cubic ft	8.42184
hogsheads (U.S.)	gallons (U.S.)	63
horsepower	Btu/min	42.44
horsepower	ft-lb/min	33,000.0
horsepower	ft-lb/sec	550.0
horsepower (metric) (542.5 ft lb/sec)	horsepower (550 ft-lb/sec)	0.9863
horsepower (550 ft lb/sec)	horsepower (metric) (542.5 ft-lb/sec)	1.014
horsepower	kg-calories/min	10.68
horsepower	kilowatts	0.7457
horsepower	watts	745.7
horsepower (boiler)	Btu/hr	33.479
horsepower (boiler)	kilowatts	9.803
horsepower-hr	Btu	2,547.0
horsepower-hr	ergs	2.6845×10^{13}
horsepower-hr	ft-lb	1.98×10^{6}
horsepower-hr	gram-calories	641,190.0
horsepower-hr	joules	2.684×10^{6}
horsepower-hr	kg-calories	641.1
horsepower-hr	kg-meters	2.737×10^{5}
horsepower-hr	kilowatt-hr	0.7457
hours	days	4.167×10^{-2}
hours	weeks	5.952×10^{-3}
hundredweights (long)	pounds	112
hundredweights (long)	tons (long)	0.05
hundredweights (short)	ounces (avoirdupois)	1,600
hundredweights (short)	pounds	100
hundredweights (short)	tons (metric)	0.0453592
hundredweights (short)	tons (long)	0.0446429

© 2003 by Béla Lipták

TABLE A.2a Continued
Conversion Factors

To Convert	*Into*	*Multiply by*
	I	
inches	centimeters	2.540
inches	meters	2.540×10^{-2}
inches	miles	1.578×10^{-5}
inches	millimeters	25.40
inches	mils	1,000.0
inches	yards	2.778×10^{-2}
inches of mercury	atmospheres	0.03342
inches of mercury	feet of water	1.133
inches of mercury	kg/sq cm	0.03453
inches of mercury	kg/sq meter	345.3
inches of mercury	pounds/sq ft	70.73
inches of mercury	pounds/sq in.	0.4912
inches of water (at 4°C)	atmospheres	2.458×10^{-3}
inches of water (at 4°C)	inches of mercury	0.07355
inches of water (at 4°C)	kg/sq cm	2.540×10^{-3}
inches of water (at 4°C)	ounces/sq in.	0.5781
inches of water (at 4°C)	pounds/sq ft	5.204
inches of water (at 4°C)	pounds/sq in.	0.03613
International ampere	ampere (absolute)	0.9998
International volt	volts (absolute)	1.0003
	J	
joules	Btu	9.480×10^{-4}
joules	ergs	10^7
joules	foot-pounds	0.7376
joules	kg-calories	2.389×10^{-4}
joules	kg-meters	0.1020
joules	watt-hr	2.778×10^{-4}
joules/cm	grams	1.020×10^4
joules/cm	dynes	10^7
joules/cm	joules/meter (newtons)	100.0
joules/cm	poundals	723.3
joules/cm	pounds	22.48
	K	
kilograms	dynes	980,665.0
kilograms	grams	1,000.0
kilograms	joules/cm	0.09807
kilograms	joules/meter (newtons)	9.807
kilograms	poundals	70.93
kilograms	pounds	2.205
kilograms	tons (long)	9.842×10^{-4}
kilograms	tons (short)	1.102×10^{-3}
kilograms/cubic meter	grams/cubic cm	0.001
kilograms/cubic meter	pounds/cubic ft	0.06243
kilograms/cubic meter	pounds/cubic in.	3.613×10^{-5}
kilograms/cubic meter	pounds/mil-foot	3.405×10^{-10}
kilograms/meter	pounds/ft	0.6720
kilograms/sq cm	dynes	980,665
kilograms/sq cm	atmospheres	0.9678
kilograms/sq cm	feet of water	32.81
kilograms/sq cm	inches of mercury	28.96
kilograms/sq cm	pounds/sq ft	2,048.0
kilograms/sq cm	pounds/sq in.	14.22
kilograms/sq meter	atmospheres	9.678×10^{-5}
kilograms/sq meter	bars	98.07×10^{-6}
kilograms/sq meter	feet of water	3.281×10^{-3}
kilograms/sq meter	inches of mercury	2.896×10^{-3}
kilograms/sq meter	pounds/sq ft	0.2048
kilograms/sq meter	pounds/sq in.	1.422×10^{-3}
kilograms/sq mm	kg/sq meter	10^6
kilogram-calories	Btu	3.968
kilogram-calories	foot-pounds	3,088.0
kilogram-calories	hp-hr	1.560×10^{-3}
kilogram-calories	joules	4,186.0
kilogram-calories	kg-meters	426.9
kilogram-calories	kilojoules	4.186
kilogram-calories	kilowatt-hr	1.163×10^{-3}
kilogram meters	Btu	9.294×10^{-3}
kilogram meters	ergs	9.804×10^7
kilogram meters	foot-pounds	7.233
kilogram meters	joules	9.804
kilogram meters	kg-calories	2.342×10^{-3}
kilogram meters	kilowatt-hr	2.723×10^{-6}
kilolines	maxwells	1,000.0
kiloliters	liters	1,000.0
kilometers	centimeters	10^5
kilometers	feet	3,281.0
kilometers	inches	3.937×10^4
kilometers	meters	1,000.0
kilometers	miles	0.6214
kilometers	millimeters	10^6
kilometers	yards	1,094.0
kilometers/hr	cm/sec	27.78
kilometers/hr	ft/min	54.68
kilometers/hr	ft/sec	0.9113
kilometers/hr	knots	0.5396
kilometers/hr	meters/min	16.67

© 2003 by Béla Lipták

TABLE A.2a Continued
Conversion Factors

To Convert	Into	Multiply by
kilometers/hr	miles/hr	0.6214
kilometers/hr/sec	cm/sec/sec	27.78
kilometers/hr/sec	ft/sec/sec	0.9113
kilometers/hr/sec	meters/sec/sec	0.2778
kilometers/hr/sec	miles/hr/sec	0.6214
kilowatts	Btu/min	56.92
kilowatts	ft-lb/min	4.426×10^{4}
kilowatts	ft-lb/sec	737.6
kilowatts	horsepower	1.341
kilowatts	kg-calories/min	14.34
kilowatts	watts	1,000.0
kilowatt-hr	Btu	3,413.0
kilowatt-hr	ergs	3.600×10^{13}
kilowatt-hr	ft-lb	2.655×10^{6}
kilowatt-hr	gram-calories	859,850.0
kilowatt-hr	horsepower-hr	1,341
kilowatt-hr	joules	3.6×10^{6}
kilowatt-hr	kg-calories	860.5
kilowatt-hr	kg-meters	3.671×10^{5}
kilowatt-hr	pounds of water evaporated from and at 212°F	3.53
kilowatt-hr	pounds of water raised from 62° to 212°F	22.75
knots	ft/hr	6,080.0
knots	kilometers/hr	1.8532
knots	nautical miles/hr	1.0
knots	statute miles/hr	1.151
knots	yards/hr	2,027.0
knots	ft/sec	1.689
	L	
league	miles (approx.)	3.0
light year	miles	5.9×10^{12}
light year	kilometers	9.46091×10^{12}
lines/sq cm	gauss	1.0
lines/sq in.	gauss	0.1550
lines/sq in.	webers/sq cm	1.550×10^{-9}
lines/sq in.	webers/sq in.	10^{-8}
lines/sq in.	webers/sq meter	1.550×10^{-5}
links (engineer's)	inches	12.0
links (surveyor's)	inches	7.92
liters	bushels (U.S. dry)	0.02833
liters	cubic cm	1,000.0
liters	cubic ft	0.03531
liters	cubic in.	61.02
liters	cubic meters	0.001
liters	cubic yards	1.308×10^{-3}
liters	gallons (U.S. liq.)	0.2642
liters	pints (U.S. liq.)	2.113
liters	quarts (U.S. liq.)	1.057
liters/min	cubic ft/sec	5.886×10^{-4}
liters/min	gals/sec	4.403×10^{-3}
lumens/sq ft	foot-candles	1.0
lumen	spherical candle power	0.07958
lumen	watt	0.001496
lumen/sq ft	lumen/sq meter	10.76
lux	foot-candles	0.0929
	M	
maxwells	kilolines	0.001
maxwells	webers	10^{-8}
megalines	maxwells	10^{6}
megohms	microhms	10^{12}
megohms	ohms	10^{6}
meters	centimeters	100.0
meters	feet	3.281
meters	inches	39.37
meters	kilometers	0.001
meters	miles (naut.)	5.396×10^{-4}
meters	miles (stat.)	6.214×10^{-4}
meters	millimeters	1,000.0
meters	yards	1.094
meters	varas	1.179
meters/min	cm/sec	1.667
meters/min	ft/min	3.281
meters/min	ft/sec	0.05468
meters/min	km/hr	0.06
meters/min	knots	0.03238
meters/min	miles/hr	0.03728
meters/sec	ft/min	196.8
meters/sec	ft/sec	3.281
meters/sec	kilometers/hr	3.6
meters/sec	kilometers/min	0.06
meters/sec	miles/hr	2.237
meters/sec	miles/min	0.03728
meters/sec/sec	cm/sec/sec	100.0
meters/sec/sec	ft/sec/sec	3.281

© 2003 by Béla Lipták

TABLE A.2a Continued
Conversion Factors

To Convert	*Into*	*Multiply by*
meters/sec/sec	km/hr/sec	3.6
meters/sec/sec	miles/hr/sec	2.237
meter-kilograms	cm-dynes	9.807×10^{7}
meter-kilograms	cm-grams	10^{5}
meter-kilograms	pound-feet	7.233
microfarad	farads	10^{-6}
micrograms	grams	10^{-6}
microhms	megohms	10^{-12}
microhms	ohms	10^{-6}
microliters	liters	10^{-6}
microns	meters	1×10^{-6}
miles (naut.)	miles (statute)	1.1516
miles (naut.)	yards	2,027.0
miles (statute)	centimeters	1.609×10^{5}
miles (statute)	feet	5,280.0
miles (statute)	inches	6.336×10^{4}
miles (statute)	kilometers	1.609
miles (statute)	meters	1,609.0
miles (statute)	miles (naut.)	0.8684
miles (statute)	yards	1,760.0
miles/hr	cm/sec	44.70
miles/hr	ft/min	88.0
miles/hr	ft/sec	1.467
miles/hr	km/hr	1.609
miles/hr	km/min	0.02682
miles/hr	knots	0.8684
miles/hr	meters/min	26.82
miles/hr	miles/min	0.1667
miles/hr/sec	cm/sec/sec	44.70
miles/hr/sec	ft/sec/sec	1.467
miles/hr/sec	km/hr/sec	1.609
miles/hr/sec	meters/sec/sec	0.4470
miles/min	cm/sec	2,682.0
miles/min	ft/sec	88.0
miles/min	km/min	1.609
miles/min	knots/min	0.8684
miles/min	miles/hr	60.0
mil-feet	cubic in.	9.425×10^{-6}
milliers	kilograms	1,000.0
millimicrons	meters	1×10^{-9}
milligrams	grains	0.01543236
milligrams	grams	0.001
milligrams/liter	part/million	1.0
millihenries	henries	0.001
milliliters	liters	0.001
millimeters	centimeters	0.1
millimeters	feet	3.281×10^{-3}
millimeters	inches	0.03937
millimeters	kilometers	10^{-6}
millimeters	meters	0.001
millimeters	miles	6.214×10^{-7}
millimeters	mils	39.37
millimeters	yards	1.094×10^{-3}
million gals/day	cubic ft/sec	1.54723
mils	centimeters	2.540×10^{-3}
mils	feet	8.333×10^{-5}
mils	inches	0.001
mils	kilometers	2.540×10^{-8}
mils	yards	2.778×10^{-5}
miner's inches	cubic ft/min	1.5
minims (U.K.)	cubic cm	0.059192
minims (U.S., fluid)	cubic cm	0.061612
minutes (angles)	degrees	0.01667
miles (naut.)	feet	6,080.27
miles (naut.)	kilometers	1.853
miles (naut.)	meters	1,853.0
minutes (angles)	quadrants	1.852×10^{-4}
minutes (angles)	radians	2.909×10^{-4}
minutes (angles)	seconds	60.0
myriagrams	kilograms	10.0
myriameters	kilometers	10.0
myriawatts	kilowatts	10.0
	N	
nepers	decibels	8.686
newton	dynes	1×10^{5}
	O	
ohm (International)	ohm (absolute)	1.0005
ohms	megohms	10^{-6}
ohms	microhms	10^{6}
ounces	drams	16.0
ounces	grains	437.5
ounces	grams	28.349527
ounces	pounds	0.0625
ounces	ounces (troy)	0.9115
ounces	tons (long)	2.790×10^{-5}
ounces	tons (metric)	2.835×10^{-5}
ounces (fluid)	cubic in.	1.805

© 2003 by Béla Lipták

TABLE A.2a Continued
Conversion Factors

To Convert	Into	Multiply by
ounces (fluid)	liters	0.02957
ounces (troy)	grains	480.0
ounces (troy)	grams	31.103481
ounces (troy)	ounces (avdp.)	1.09714
ounces (troy)	pennyweights (troy)	20.0
ounces (troy)	pounds (troy)	0.08333
ounce/sq in.	dynes/sq cm	4309
ounces/sq in.	pounds/sq in.	0.0625
	P	
parsec	miles	19×10^{12}
parsec	kilometers	3.084×10^{13}
parts/million	grains/U.S. gal	0.0584
parts/million	grains/Imp. gal	0.07016
parts/million	pounds/million gal	8.345
pecks (U.K.)	cubic in.	554.6
pecks (U.K.)	liters	9.091901
pecks (U.S.)	bushels	0.25
pecks (U.S.)	cubic in.	537.605
pecks (U.S.)	liters	8.809582
pecks (U.S.)	quarts (dry)	8
pennyweights (troy)	grains	24.0
pennyweights (troy)	ounces (troy)	0.05
pennyweights (troy)	grams	1.55517
pennyweights (troy)	pounds (troy)	4.1667×10^{-3}
pints (dry)	cubic in.	33.60
pints (liq.)	cubic cm	473.2
pints (liq.)	cubic ft	0.01671
pints (liq.)	cubic in.	28.87
pints (liq.)	cubic meters	4.732×10^{-4}
pints (liq.)	cubic yards	6.189×10^{-4}
pints (liq.)	gallons	0.125
pints (liq.)	liters	0.4732
pints (liq.)	quarts (liq.)	0.5
Planck's quantum	erg/sec	6.624×10^{-27}
poise	gram/cm sec	1.00
pounds (avoirdupois)	ounces (troy)	14.5833
poundals	dynes	13,826.0
poundals	grams	14.10
poundals	joules/cm	1.383×10^{-3}
poundals	joules/meter (newtons)	0.1383
poundals	kilograms	0.01410
poundals	pounds	0.03108
pounds	drams	256.0
pounds	dynes	44.4823×10^{4}
pounds	grains	7,000.0
pounds	grams	453.5924
pounds	joules/cm	0.04448
pounds	joules/meter (newtons)	4.448
pounds	kilograms	0.4536
pounds	ounces	16.0
pounds	ounces (troy)	14.5833
pounds	poundals	32.17
pounds	pounds (troy)	1.21528
pounds	tons (short)	0.0005
pounds (troy)	grains	5,760.0
pounds (troy)	grams	373.24177
pounds (troy)	ounces (avdp.)	13.1657
pounds (troy)	ounces (troy)	12.0
pounds (troy)	pennyweights (troy)	240.0
pounds (troy)	pounds (avdp.)	0.822857
pounds (troy)	tons (long)	3.6735×10^{-4}
pounds (troy)	tons (metric)	3.7324×10^{-4}
pounds (troy)	tons (short)	4.1143×10^{-4}
pounds of water	cubic ft	0.01602
pounds of water	cubic in.	27.68
pounds of water	gallons	0.1198
pounds of water/min	cubic ft/sec	2.670×10^{-4}
pound-feet	cm-dynes	1.356×10^{7}
pound-feet	cm-grams	13,825.0
pound-feet	meter-kg	0.1383
pounds/cubic ft	grams/cubic cm	0.01602
pounds/cubic ft	kg/cubic meter	16.02
pounds/cubic ft	pounds/cubic in.	5.787×10^{-4}
pounds/cubic ft	pounds/mil-foot	5.456×10^{-9}
pounds/cubic in.	gm/cubic cm	27.68
pounds/cubic in.	kg/cubic meter	2.768×10^{4}
pounds/cubic in.	pounds/cubic ft	1,728.0
pounds/cubic in.	pounds/mil-foot	9.425×10^{-6}
pounds/ft	kg/meter	1.488
pounds/in.	gm/cm	178.6
pounds/mil-foot	gm/cubic cm	2.306×10^{6}
pounds/sq ft	atmospheres	4.725×10^{-4}
pounds/sq ft	feet of water	0.01602
pounds/sq ft	inches of mercury	0.01414
pounds/sq ft	kg/sq meter	4.882
pounds/sq ft	pounds/sq in.	6.944×10^{-3}
pounds/sq in	atmospheres	0.06804

© 2003 by Béla Lipták

TABLE A.2a Continued
Conversion Factors

To Convert	*Into*	*Multiply by*
pounds/sq in.	feet of water	2.307
pounds/sq in.	inches of mercury	2.036
pounds/sq in.	kg/sq meter	703.1
pounds/sq in.	pounds/sq ft	144.0
	Q	
quadrants (angle)	degrees	90.0
quadrants (angle)	minutes	5,400.0
quadrants (angle)	radians	1.571
quadrants (angle)	seconds	3.24×10^{5}
quarts (dry)	cubic in.	67.20
quarts (liq.)	cubic cm	946.4
quarts (liq.)	cubic ft	0.03342
quarts (liq.)	cubic in.	57.75
quarts (liq.)	cubic meters	9.464×10^{-4}
quarts (liq.)	cubic yards	1.238×10^{-3}
quarts (liq.)	gallons	0.25
quarts (liq.)	liters	0.9463
	R	
radians	degrees	57.30
radians	minutes	3,438.
radians	quadrants	0.6366
radians	seconds	2.063×10^{5}
radians/sec	degrees/sec	57.30
radians/sec	rev/min	9.549
radians/sec	rev/sec	0.1592
radians/sec/sec	rev/min/min	573.0
radians/sec/sec	rev/min/sec	9.549
radians/sec/sec	rev/sec/sec	0.1592
revolutions	degrees	360.0
revolutions	quadrants	4.0
revolutions	radians	6.283
revolutions/min	degrees/sec	6.0
revolutions/min	radians/sec	0.1047
revolutions/min	rev/sec	0.01667
revolutions/min/min	radians/sec/sec	1.745×10^{-3}
revolutions/min/min	rev/min/sec	0.01667
revolutions/min/min	rev/sec/sec	2.778×10^{-4}
revolutions/sec	degrees/sec	360.0
revolutions/sec	radians/sec	6.283
revolutions/sec	rev/min	60.0
revolutions/sec/sec	radians/sec/sec	6.283
revolutions/sec/sec	rev/min/min	3,600.0
revolutions/sec/sec	rev/min/sec	60.0
rod	chain (Gunters)	0.25
rod	meters	5.029
rods (surveyors' meas.)	yards	5.5
rods	feet	16.5
	S	
scruples	grains	20
seconds (angle)	degrees	2.778×10^{-4}
seconds (angle)	minutes	0.01667
seconds (angle)	quadrants	3.087×10^{-6}
seconds (angle)	radians	4.848×10^{-6}
slug	kilogram	14.50
slug	pounds	32.17
sphere	steradians	12.57
square centimeters	circular mils	1.973×10^{5}
square centimeters	sq ft	1.076×10^{-3}
square centimeters	sq in.	0.1550
square centimeters	sq meters	0.0001
square centimeters	sq miles	3.861×10^{-11}
square centimeters	sq millimeters	100.0
square centimeters	sq yards	1.196×10^{-4}
square feet	acres	2.296×10^{-5}
square feet	circular mils	1.833×10^{8}
square feet	sq cm	929.0
square feet	sq in.	144.0
square feet	sq meters	0.09290
square feet	sq miles	3.587×10^{-8}
square feet	sq millimeters	9.290×10^{4}
square feet	sq yards	0.1111
square inches	circular mils	1.273×10^{6}
square inches	sq cm	6.452
square inches	sq ft	6.944×10^{-4}
square inches	sq millimeters	645.2
square inches	sq mils	10^{6}
square inches	sq yards	7.716×10^{-4}
square kilometers	acres	247.1
square kilometers	sq cm	10^{10}
square kilometers	sq ft	10.76×10^{6}
square kilometers	sq in.	1.550×10^{9}
square kilometers	sq meters	10^{6}
square kilometers	sq miles	0.3861
square kilometers	sq yards	1.196×10^{6}
square meters	acres	2.471×10^{-4}
square meters	sq cm	10^{4}

© 2003 by Béla Lipták

TABLE A.2a Continued
Conversion Factors

To Convert	Into	Multiply by
square meters	sq cm	10^4
square meters	sq in.	1,550.0
square meters	sq miles	3.861×10^{-7}
square meters	sq millimeters	10^6
square meters	sq yards	1.196
square miles	acres	640.0
square miles	sq ft	27.88×10^6
square miles	sq km	2.590
square miles	sq meters	2.590×10^6
square miles	sq yards	3.098×10^6
square millimeters	circular mils	1,973.0
square millimeters	sq cm	0.01
square millimeters	sq ft	1.076×10^{-5}
square millimeters	sq in.	1.550×10^{-3}
square mils	circular mils	1.273
square mils	sq cm	6.452×10^{-6}
square mils	sq in.	10^{-6}
square yards	acres	2.066×10^{-4}
square yards	sq cm	8,361.0
square yards	sq ft	9.0
square yards	sq in.	1,296.0
square yards	sq meters	0.8361
square yards	sq miles	3.228×10^{-7}
square yards	sq millimeters	8.361×10^5
	T	
temperature (°C) + 273	absolute temperature (°K)	1.0
temperature (°C) + 17.78	temperature (°F)	1.8
temperature (°F) + 460	absolute temperature (°R)	1.0
temperature (°F) − 32	temperature (°C)	5/9
tons (long)	kilograms	1,016.0
tons (long)	pounds	2,240.0
tons (long)	tons (short)	1.120
tons (metric)	kilograms	1,000.0
tons (metric)	pounds	2,205
tons (short)	kilograms	907.1848
tons (short)	ounces	32,000.0
tons (short)	ounces (troy)	29,166.66
tons (short)	pounds	2,000.0
tons (short)	pounds (troy)	2,430.56
tons (short)	tons (long)	0.89287
tons (short)	tons (metric)	0.9078
tons (short)/sq ft	kg/sq meter	9,765.0
tons (short)/sq ft	pounds/sq in.	2,000.0
tons of water/24 hr	pounds of water/hr	83.333
tons of water/24 hrs	gallons/min	0.16643
tons of water/24 hrs	cubic ft/hr	1.3349
	V	
volt/inch	volt/cm	0.39370
volt (absolute)	statvolts	0.003336
	W	
watts	Btu/hr	3.4129
watts	Btu/min	0.05688
watts	ergs/sec	107.0
watts	ft-lb/min	44.27
watts	ft-lb/sec	0.7378
watts	horsepower	1.341×10^{-3}
watts	horsepower (metric)	1.360×10^{-3}
watts	kg-calories/min	0.01433
watts	kilowatts	0.001
watts (abs.)	Btu (mean)/min	0.056884
watts (abs.)	joules/sec	1.0
watt-hours	Btu	3.413
watt-hours	ergs	3.60×10^{10}
watt-hours	foot-pounds	2,656.0
watt-hours	gram-calories	859.85
watt-hours	horsepower-hr	1.341×10^{-3}
watt-hours	kilogram-calories	0.8605
watt-hours	kilogram-meters	367.2
watt-hours	kilowatt-hr	0.001
watt (International)	watt (absolute)	1.0002
webers	maxwells	10^8
webers	kilolines	10^5
webers/sq in.	gauss	1.550×10^7
webers/sq in.	lines/sq in.	10^8
webers/sq in.	webers/sq cm	0.1550
webers/sq in.	webers/sq meter	1,550.0
webers/sq meter	gauss	10^4
webers/sq meter	lines/sq in.	6.452×10^4
webers/sq meter	webers/sq cm	10^{-4}
webers/sq meter	webers/sq in.	6.452×10^{-4}
	Y	
yards	centimeters	91.44
yards	kilometers	9.144×10^{-4}
yards	meters	0.9144
yards	miles (naut.)	4.934×10^{-4}
yards	miles (stat.)	5.682×10^{-4}
yards	millimeters	914.4

© 2003 by Béla Lipták

TABLE A.2b
Units of Area

1 cir mil[a]
= 0.000000785 sq in.

1 sq in.
= 1,273,200 cir mils
= 0.00694 sq ft
= 0.000772 sq yd

1 sq ft
= 144 sq in.
= 0.01111 sq yd
= 0.00002296 acres

1 sq yd
= 1296 sq in.
= 9 sq ft
= 0.0002066 acres

1 acre
= 43,560 sq ft
= 4840 sq yd
= 4096 sq m

[a]A cir (circular) mil is the area of a circle of 1/1000 in. dia. Thus, a round rod of 1-in. dia. has an area of 1,000,000 cir mils.

TABLE A.2c
Units of Density

1 lb/cubic in.
= 1728 lb/cubic ft
= 0.864 tons[a]/cubic ft
= 23.3 tons/cubic yd
= 231 lb/gal

1 lb/cubic ft
= 0.000579 lb/cubic in.
= 0.000500 tons/cubic ft
= 0.0135 tons/cubic yd
= 0.1337 lb/gal

1 ton/cubic ft
= 1.157 lb/cubic in.
= 2000 lb/cubic ft
= 27 tons/cubic yd
= 267 lb/gal

1 ton/cubic yd
= 0.0429 lb/cubic in.
= 74.1 lb/cubic ft
= 0.0370 tons/cubic ft
= 9.90 lb/gal

1 lb/gal
= 0.00433 lb/cubic in.
= 7.48 lb/cubic ft
= 0.00374 tons/cubic ft
= 0.1010 tons/cubic yd

[a]Tons are short = 2000 lb.

TABLE A.2d
Units of Work, Energy, Heat

1 Btu
= 9340 in.-lb
= 778.3 ft-lb
= 0.0002938 kW hr[a]
= 0.0003931 hp hr

1 in.-lb
= 0.0001070 Btu
= 0.0833 ft-lb
= 0.00000003137 kW hr
= 0.0000000421 hp hr

1 ft-lb
= 0.001284 Btu
= 12 in.-lb
= 0.000000376 kW hr
= 0.000000505 hp hr

1 kW hr
= 3413 Btu
= 31,873,000 in.-lb
= 2,656,100 ft-lb
= 1.342 hp hr

1 hp hr
= 2544 Btu
= 23,760,000 in.-lb
= 1,980,000 ft-lb
= 0.7455 kW hr

[a]1 kilowatthour = 3413 Btu, and 1 Btu = 778.3 ft-lb.

TABLE A.2e
Units of Mass Flow

1 lb/sec
= 60 lb/min
= 3600 lb/hr
= 86,400 lb/day
= 2,628,000 lb/mo[a]
= 31,536,000 lb/yr

1 lb/min
= 0.01667 lb/sec
= 60 lb/hr
= 1440 lb/day
= 43,800 lb/mo
= 525,600 lb/yr

1 lb/hr
= 0.0002778 lb/sec
= 0.01667 lb/min
= 24 lb/day
= 730 lb/mo
= 8760 lb/yr

1 lb/day
= 0.00001157 lb/sec
= 0.000694 lb/min
= 0.0417 lb/hr
= 30.4 lb/mo
= 365 lb/yr

1 lb/mo
= 0.000000381 lb/sec
= 0.0000228 lb/min
= 0.001370 lb/hr
= 0.0329 lb/day
= 12 lb/yr

1 lb/yr
= 0.0000000317 lb/sec
= 0.000001903 lb/min
= 0.0001142 lb/hr
= 0.002740 lb/day
= 0.0833 lb/mo

[a]Month used is exactly 1/12 year = 30.4 days.

TABLE A.2f
Units of Volume Flow

1 cubic ft/sec
= 60 cubic ft/min
= 3600 cubic ft/hr
= 7.48 gal/sec
= 448.8 gal/min
= 26,930 gal/hr

1 cubic ft/min
= 0.01667 cubic ft/sec
= 60 cubic ft/hr
= 0.1247 gal/sec
= 7.48 gal/min
= 448.8 gal/hr

1 cubic ft/hr
= 0.0002778 cubic ft/sec
= 0.01667 cubic ft/min
= 0.002078 gal/sec
= 0.1247 gal/min
= 7.48 gal/hr

1 gal/sec
= 0.1337 cubic ft/sec
= 8.02 cubic ft/min
= 481 cubic ft/hr
= 60 gal/min
= 3600 gal/hr

1 gal/min
= 0.002228 cubic ft/sec
= 0.1337 cubic ft/min
= 8.02 cubic ft/hr
= 0.01667 gal/sec
= 60 gal/hr

1 gal/hr
= 0.0000371 cubic ft/sec
= 0.002228 cubic ft/min
= 0.1337 cubic ft/hr
= 0.0002778 gal/sec
= 0.01667 gal/min

TABLE A.2g
Units of Length

1 in.
= 0.0833 ft
= 0.0277 yd
= 0.0000158 miles

1 ft
= 12 in.
= 0.333 yd
= 0.000189 miles

1 yd
= 36 in.
= 3 ft
= 0.000568 miles

1 mile
= 63360 in.
= 5280 ft
= 1760 yd

© 2003 by Béla Lipták

TABLE A.2h
Linear Conversion

Inches to Millimeters *1 inch = 25.4 millimeters*						*Millimeters to Inches* *1 millimeter = .03937 inches*							
Inches	*Millimeters*	*Inches*	*Millimeters*	*Inches*	*Millimeters*	*Millimeters*	*Inches*	*Millimeters*	*Inches*	*Millimeters*	*Inches*	*Millimeters*	*Inches*
1/16	1.6	2.0	50.8	4.5	114.3	1.0	0.0394	3.5	0.1378	6.0	0.2362	8.5	0.3346
1/8	3.2	2.1	53.3	4.6	116.8	1.1	0.0433	3.6	0.1417	6.1	0.2402	8.6	0.3386
3/16	4.8	2.2	55.9	4.7	119.4	1.2	0.0472	3.7	0.1457	6.2	0.2441	8.7	0.3425
1/4	6.4	2.3	58.4	4.8	121.9	1.3	0.0512	3.8	0.1496	6.3	0.2480	8.8	0.3465
5/16	7.9	2.4	61.0	4.9	124.5	1.4	0.0551	3.9	0.1535	6.4	0.2520	8.9	0.3504
3/8	9.5	2.5	63.5	5.0	127.0	1.5	0.0591	4.0	0.1575	6.5	0.2559	9.0	0.3543
7/16	11.1	2.6	66.0	5.5	139.7	1.6	0.0630	4.1	0.1614	6.6	0.2598	9.1	0.3583
1/2	12.7	2.7	68.6	6.0	152.4	1.7	0.0669	4.2	0.1654	6.7	0.2638	9.2	0.3622
9/16	14.3	2.8	71.1	6.5	165.1	1.8	0.0709	4.3	0.1693	6.8	0.2677	9.3	0.3661
5/8	15.9	2.9	73.7	7.0	177.8	1.9	0.0748	4.4	0.1732	6.9	0.2717	9.4	0.3701
11/16	17.5	3.0	76.2	7.5	190.5	2.0	0.0787	4.5	0.1772	7.0	0.2756	9.5	0.3740
3/4	19.1	3.1	78.7	8.0	203.2	2.1	0.0827	4.6	0.1811	7.1	0.2795	9.6	0.3780
13/16	20.6	3.2	81.3	8.5	215.9	2.2	0.0866	4.7	0.1850	7.2	0.2835	9.7	0.3819
7/8	22.2	3.3	83.8	9.0	228.6	2.3	0.0906	4.8	0.1890	7.3	0.2874	9.8	0.3858
15/16	23.8	3.4	86.4	9.5	241.3	2.4	0.0945	4.9	0.1929	7.4	0.2913	9.9	0.3898
				10.0	254.0							10.0	0.3937
1.0	25.4	3.5	88.9			2.5	0.0984	5.0	0.1969	7.5	0.2953		
1.1	27.9	3.6	91.4			2.6	0.1024	5.1	0.2008	7.6	0.2992		
1.2	30.5	3.7	94.0			2.7	0.1063	5.2	0.2047	7.7	0.3031		
1.3	33.0	3.8	96.5			2.8	0.1102	5.3	0.2087	7.8	0.3071		
1.4	35.6	3.9	99.1			2.9	0.1142	5.4	0.2126	7.9	0.3110		
1.5	38.1	4.0	101.6			3.0	0.1181	5.5	0.2165	8.0	0.3150		
1.6	40.6	4.1	104.1			3.1	0.1220	5.6	0.2205	8.1	0.3189		
1.7	43.2	4.2	106.7			3.2	0.1260	5.7	0.2244	8.2	0.3228		
1.8	45.7	4.3	109.2			3.3	0.1299	5.8	0.2283	8.3	0.3268		
1.9	48.3	4.4	111.8			3.4	0.1339	5.9	0.2323	8.4	0.3307		

By moving the decimal place, conversions for figures larger than 10 may be obtained.

© 2003 by Béla Lipták

TABLE A.2i
Units of Power

1 kW	1 ft-lb/hr
= 1.3415 hp	= 0.000000376 kW
= 738 ft-lb[a]/sec	= 0.000000505 hp
= 44,268 ft-lb/min	= 0.000278 ft-lb/sec
= 2,656,100 ft-lb/hr	= 0.01667 ft-lb/min
= 0.948 Btu/sec	= 0.000000357 Btu/sec
= 56.9 Btu/min	= 0.00002141 Btu/min
= 3413 Btu/hr	= 0.001284 Btu/hr
1 hp	1 Btu/sec
= 0.7455 kW	= 1.055 kW
= 550 ft-lb/sec	= 1.416 hp
= 33,000 ft-lb/min	= 778 ft-lb/sec
= 1,980,000 ft-lb/hr	= 46,700 ft-lb/min
= 0.707 Btu/sec	= 2,802,000 ft-lb/hr
= 0.424 Btu/min	= 60 Btu/min
= 2544 Btu/hr	= 3600 Btu/hr
1 ft-lb/sec	1 Btu/min
= 0.001355 kW	= 0.01759 kW
= 0.001818 hp	= 0.02359 hp
= 60 ft-lb/min	= 12.98 ft-lb/sec
= 3600 ft-lb/hr	= 778 ft-lb/min
= 0.001284 Btu/sec	= 46,700 ft-lb/hr
= 0.0771 Btu/min	= 0.01667 Btu/sec
= 4.62 Btu/hr	= 60 Btu/hr
1 ft-lb/min	1 Btu/hr
= 0.00002259 kW	= 0.0002931 kW
= 0.0000303 hp	= 0.0003932 hp
= 0.01667 ft-lb/sec	= 0.2163 ft-lb/sec
= 60 ft-lb hr	= 12.98 ft-lb/min
= 0.00002141 Btu/sec	= 778 ft-lb/hr
= 0.001284 Btu/min	= 0.0002778 Btu/sec
= 0.0771 Btu/hr	= 0.01667 Btu/min

[a]Ft-lb means foot-pound, the work done in moving against one pound force a distance of one foot.

TABLE A.2j
Units of Pressure

1 in. water[a]	1 oz/sq ft
= 0.0833 ft water	= 0.01203 in. water
= 0.0735 in. Hg	= 0.001002 ft water
= 0.577 oz/sq in.	= 0.000886 in. Hg
= 0.831 oz/sq ft	= 0.00694 oz/sq in.
= 0.0361 lb/sq in.	= 0.000434 lb/sq in.
= 5.20 lb/sq ft	= 0.0625 lb/sq ft
1 ft water	1 lb/sq in.
= 12 in. water	= 27.71 in. water
= 0.882 in. Hg	= 2.31 ft water
= 6.93 oz/sq in.	= 2.04 in. Hg
= 998 oz/sq ft	= 16 oz/sq in.
= 0.433 lb/sq in.	= 2304 oz/sq ft
= 62.4 lb/sq ft	= 144 lb/sq ft
1 in. Hg	1 lb/sq ft
= 13.61 in. water	= 0.1924 in. water
= 1.131 ft water	= 0.01604 ft water
= 7.84 oz/sq in.	= 0.01418 in. Hg
= 1129 oz/sq ft	= 0.1111 oz/sq in.
= 0.491 lb/sq in.	= 16 oz/sq ft
= 70.5 lb/sq ft	= 0.00694 lb/sq in.
1 oz/sq in.	
= 1.732 in. water	
= 0.1443 ft water	
= 0.1276 in. Hg	
= 144 oz/sq ft	
= 0.0625 lb/sq in.	
= 9 lb/sq ft	

[a]in. water means inches of water at 60°F.
in. Hg means inches head of mercury at 32°F.

© 2003 by Béla Lipták

TABLE A.2k
Pressure Conversion

1 pound per square inch = 0.0703 kilograms per square centimeter

$lb/in.^2$	kg/cm^2	$lb/in.^2$	kg/cm^2	$lb/in.^2$	kg/cm^2	$lb/in.^2$	kg/cm^2
1.00	0.0703	2.25	0.1582	4.50	0.3164	8.25	0.5800
1.10	0.0773	2.30	0.1617	4.75	0.3339	8.50	0.5976
1.20	0.0844	2.40	0.1687	5.00	0.3515	8.75	0.6151
1.25	0.0879	2.50	0.1758	5.25	0.3691	9.00	0.6327
1.30	0.0914	2.60	0.1828	5.50	0.3867	9.25	0.6503
1.40	0.0984	2.70	0.1898	5.75	0.4042	9.50	0.6679
1.50	0.1055	2.75	0.1933	6.00	0.4218	9.75	0.6854
1.60	0.1125	2.80	0.1969	6.25	0.4394	10.00	0.7030
1.70	0.1195	2.90	0.2039	6.50	0.4570		
1.75	0.1230	3.00	0.2109	6.75	0.4746		
1.80	0.1265	3.25	0.2285	7.00	0.4921		
1.90	0.1336	3.50	0.2461	7.25	0.5097		
2.00	0.1406	3.75	0.2636	7.50	0.5273		
2.10	0.1476	4.00	0.2812	7.75	0.5448		
2.20	0.1547	4.25	0.2988	8.00	0.5624		

1 kilogram per square centimeter = 14.223 pounds per square inch

kg/cm^2	$lb/in.^2$	kg/cm^2	$lb/in.^2$	kg/cm^2	$lb/in.^2$	kg/cm^2	$lb/in.^2$
1.0	14.22	2.5	35.56	4.0	56.89	7.5	106.67
1.1	15.65	2.6	36.98	4.1	58.31	8.0	113.78
1.2	17.07	2.7	38.40	4.2	59.74	8.5	120.90
1.3	18.49	2.8	39.82	4.3	61.16	9.0	128.01
1.4	19.91	2.9	41.25	4.4	62.58	9.5	135.12
1.5	21.33	3.0	42.67	4.5	64.00	10.0	142.23
1.6	22.76	3.1	44.09	4.6	65.43		
1.7	24.18	3.2	45.51	4.7	66.85		
1.8	25.60	3.3	46.94	4.8	68.27		
1.9	27.02	3.4	48.36	4.9	69.69		
2.0	28.45	3.5	49.78	5.0	71.12		
2.1	29.87	3.6	51.20	5.5	78.23		
2.2	31.29	3.7	52.63	6.0	85.34		
2.3	32.71	3.8	54.05	6.5	92.45		
2.4	34.14	3.9	55.47	7.0	99.56		

© 2003 by Béla Lipták

TABLE A.2I

Pressure Head Conversion

The center column, marked "Known," may be used either for head in feet or for pressure in pounds per square inch—when used as head, the corresponding pressure is found in the column at the left designated as "Pressure Wanted"; when used as pressure, the corresponding head is found in the column at the right designated as "Head Wanted." For example: a 10-foot head has a pressure of 4.33 pounds per square inch, and a 10-pound pressure has a head of 23.094 feet. By moving the decimal place, quantities larger than 100 may be used.

Pressure Wanted lb/in.^{2}	*Known Pressure or Head*	*Head Wanted ft H_2O*	*Pressure Wanted lb/in.^{2}*	*Known Pressure or Head*	*Head Wanted ft/H_2O*	*Pressure Wanted lb/in.^{2}*	*Known Pressure or Head*	*Head Wanted ft H_2O*	*Pressure Wanted lb/in.^{2}*	*Known Pressure or Head*	*Head Wanted ft H_2O*
0.433	1	2.309	11.259	26	60.044	22.084	51	117.779	32.909	76	175.514
0.866	2	4.619	11.692	27	62.354	22.517	52	120.089	33.342	77	177.824
1.299	3	6.928	12.125	28	64.663	22.950	53	122.398	33.775	78	180.133
1.732	4	9.238	12.558	29	66.973	23.383	54	124.708	34.208	79	182.433
2.165	5	11.547	12.991	30	69.282	23.816	55	127.017	34.642	80	184.752
2.598	6	13.856	13.424	31	71.591	24.249	56	129.326	35.075	81	187.061
3.031	7	16.166	13.857	32	73.901	24.682	57	131.636	35.508	82	189.371
3.464	8	18.475	14.290	33	76.210	25.115	58	133.945	35.941	83	191.680
3.897	9	20.785	14.723	34	78.520	25.548	59	136.255	36.374	84	193.990
4.330	10	23.094	15.156	35	80.829	25.981	60	138.564	36.807	85	196.299
4.763	11	25.403	15.589	36	83.138	26.414	61	140.873	37.240	86	198.608
5.196	12	27.713	16.022	37	85.448	26.847	62	143.183	37.673	87	200.918
5.629	13	30.022	16.455	38	87.757	27.280	63	145.492	38.106	88	203.227
6.062	14	32.332	16.888	39	90.067	27.713	64	147.803	38.539	89	205.537
6.495	15	34.641	17.321	40	92.376	28.146	65	150.111	38.972	90	207.846
6.928	16	36.950	17.754	41	94.685	28.579	66	152.420	39.405	91	210.155
7.361	17	39.260	18.187	42	96.995	29.012	67	154.730	39.838	92	212.465
7.794	18	41.569	18.620	43	99.304	29.445	68	157.039	40.271	93	214.774
8.227	19	43.879	19.053	44	101.614	29.878	69	159.349	40.704	94	217.084
8.660	20	46.188	19.486	45	103.923	30.311	70	161.658	41.137	95	219.393
9.093	21	48.497	19.919	46	106.232	30.744	71	163.967	41.570	96	221.702
9.526	22	50.807	20.352	47	108.542	31.177	72	166.277	42.003	97	224.012
9.959	23	53.116	20.785	48	110.851	31.610	73	168.586	42.436	98	226.321
10.392	24	55.426	21.218	49	113.161	32.043	74	170.896	42.869	99	228.631
10.825	25	57.735	21.651	50	115.470	32.476	75	173.205	43.302	100	230.940

© 2003 by Béla Lipták

TABLE A.2m
Temperature Conversion

Degrees–Fahrenheit to centigrade
−°C = 5/9 (°F + 32)
+°C = 5/9 (°F − 32)

°F	0	25	50	75
–200	–128.9	–142.8	–156.7	–170.6
–100	–73.3	–87.2	–101.1	–115.0
–0	–17.8	–31.7	–45.6	–59.4
+0	–17.8	–3.9	+10.0	+23.9
100	+37.8	+51.7	65.6	79.4
200	93.3	107.2	121.1	135.0
300	148.9	162.8	176.7	190.6
400	204.4	218.3	232.2	246.1
500	260.0	273.9	287.8	301.7
600	315.6	329.4	343.3	357.2
700	371.1	385.0	398.9	412.8
800	426.7	440.6	454.4	468.3
900	482.2	496.1	510.0	523.9
1000	538.0	551.7	565.6	579.4
1100	593.2	607.2	621.1	635.0

Degrees–centigrade to Fahrenheit
−°F = (9/5 × °C) − 32
+°F = (9/5 × °C) + 32

°C	0	25	50	75
–200	–328	–373	–418	
–100	–148	–193	–238	–283
–0	+32	–13	–58	–103
+0	+32	+77	+122	+167
100	212	257	302	347
200	392	437	482	527
300	572	617	662	707
400	752	797	842	887
500	932	977	1022	1067
600	1112	1157	1202	1247
700	1292	1337	1382	1427

TABLE A.2n
Units of Time

1 sec	1 day
= 0.01667 min	= 86,400 sec
= 0.0002778 hr	= 1440 min
= 0.00001157 days	= 24 hr
= 0.0000003805 mo[a]	= 0.0329 mo
= 0.0000000317 yr	= 0.002740 yr
1 min	1 mo
= 60 sec	= 2,628,000 sec
= 0.01667 hr	= 43,800 min
= 0.000694 days	= 730 hr
= 0.0000228 mo	= 30.4 days
= 0.000001903 yr	= 0.0833 yr
1 hr	1 yr
= 3600 sec	= 31,536,000 sec
= 60 min	= 525,600 min
= 0.0417 days	= 8760 hr
= 0.001370 mo	= 365 days
= 0.0001142 yr	= 12 mo

[a]Month used is exactly $1/12$ year.

TABLE A.2o
Units of Velocity

ft/sec	1 m/min
= 60 ft/min	= 88 ft/sec
= 3600 ft/h	= 5280 ft/min
= 0.01136 m/min	= 316,800 ft/h
= 0.682 mi/h	= 60 mi/h
1 ft/min	1 mi/h
= 0.01667 ft/sec	= 1.467 ft/sec
= 60 ft/h	= 88 ft/min
= 0.0001894 m/min	= 5280 ft/h
= 0.01136 mi/h	= 0.01667 m/min
1 ft/h	
= 0.002778 ft/sec	
= 0.01667 ft/min	
= 0.00000316 m/min	
= 0.0001894 mi/h	

f = ft; h = hours; m = miles, m = minutes, sec = seconds.

© 2003 by Béla Lipták

TABLE A.2p
Viscosity Conversion

Kinematic Viscosity Centistokes = K	*Seconds Saybolt Universal*	*Seconds Saybolt Furol*	*Seconds Redwood*	*Seconds Redwood Admiralty*	*Degrees Engler*	*Degrees Bardey*
1.00	31	—	29.1	—	1.00	6200
2.56	35	—	32.1	—	1.16	2420
4.30	40	—	36.2	5.10	1.31	1440
5.90	45	—	40.3	5.52	1.46	1050
7.40	50	—	44.3	5.83	1.58	838
8.83	55	—	48.5	6.35	1.73	702
10.20	60	—	52.3	6.77	1.88	618
11.53	65	—	56.7	7.17	2.03	538
12.83	70	12.95	60.9	7.60	2.17	483
14.10	75	13.33	65.0	8.00	2.31	440
15.35	80	13.70	69.2	8.44	2.45	404
16.58	85	14.10	73.3	8.86	2.59	374
17.80	90	14.44	77.6	9.30	2.73	348
19.00	95	14.85	81.5	9.70	2.88	326
20.20	100	15.24	85.6	10.12	3.02	307
31.80	150	19.3	128	14.48	4.48	195
43.10	200	23.5	170	18.90	5.92	144
54.30	250	28.0	212	23.45	7.35	114
65.40	300	32.5	254	28.0	8.79	95
76.50	350	35.1	296	32.5	10.25	81
87.60	400	41.9	338	37.1	11.70	70.8
98.60	450	46.8	381	41.7	13.15	62.9
110.	500	51.6	423	46.2	14.60	56.4
121.	550	56.6	465	50.8	16.05	51.3
132.	600	61.4	508	55.4	17.50	47.0
143.	650	66.2	550	60.1	19.00	43.4
154.	700	71.1	592	64.6	20.45	40.3
165.	750	76.0	635	69.2	21.90	37.6
176.	800	81.0	677	73.8	23.35	35.2
187.	850	86.0	719	78.4	24.80	33.2
198	900	91.0	762	83.0	26.30	31.3
209	950	95.8	804	87.6	27.70	29.7
220	1000	100.7	846	92.2	29.20	28.2
330	1500	150	1270	138.2	43.80	18.7
440	2000	200	1690	184.2	58.40	14.1

© 2003 by Béla Lipták

TABLE A.2p Continued
Viscosity Conversion

Kinematic Viscosity Centistokes = K	*Seconds Saybolt Universal*	*Seconds Saybolt Furol*	*Seconds Redwood*	*Seconds Redwood Admiralty*	*Degrees Engler*	*Degrees Bardey*
550	2500	250	2120	230	73.00	11.3
660	3000	300	2540	276	87.60	9.4
770	3500	350	2960	322	100.20	8.05
880	4000	400	3380	368	117.00	7.05
990	4500	450	3810	414	131.50	6.26
1100	5000	500	4230	461	146.00	5.64
1210	5500	550	4650	507	160.50	5.13
1320	6000	600	5080	553	175.00	4.70
1430	6500	650	5500	559	190.00	4.34
1540	7000	700	5920	645	204.50	4.03
1650	7500	750	6350	691	219.00	3.76
1760	8000	800	6770	737	233.50	3.52
1870	8500	850	7190	783	248.00	3.32
1980	9000	900	7620	829	263.00	3.13
2090	9500	950	8040	875	277.00	2.97
2200	10000	1000	8460	921	292.00	2.82

The viscosity is often expressed in terms of viscosimeters other than the Saybolt Universal. The formulas for the various viscosimeters are given opposite.

If viscosity is given at any two temperatures, the viscosity at any other temperature can be obtained by plotting the viscosity against temperature in degrees Fahrenheit on special log paper. The points for a given oil lie in a straight line.

$$\text{Kinematic viscosity} = \frac{\text{absolute viscosity}}{\text{specific gravity}}$$

$$\text{Redwood K} = 0.26t - \frac{180}{t} \text{(British)}$$

$$\text{Redwood Admirality K} = 2.7t - \frac{20}{t} \text{(British)}$$

$$\text{Saybolt Universal K} = 0.22t - \frac{195}{t} \text{(American)}$$

$$\text{Saybolt Furol K} = 2.2t - \frac{184}{t} \text{(American)}$$

$$\text{Engler K} = 0.147t - \frac{374}{t} \text{(German)}$$

© 2003 by Béla Lipták

TABLE A.2q
Viscosity Conversion Chart

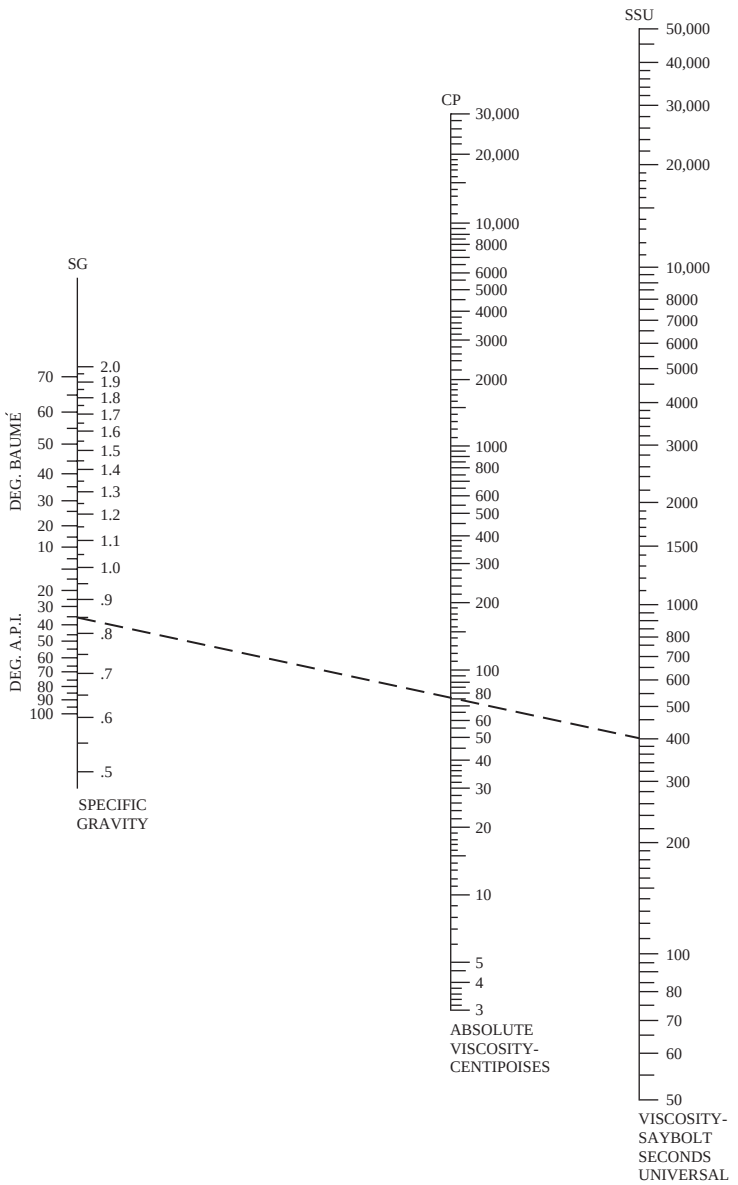

This chart enables the direct conversion of a viscosity in centipoises to a SSU viscosity. As an example, suppose the liquid under consideration has a specific gravity of .85 and a viscosity of 75 centipoises. To determine the viscosity in SSU, lay a straight edge between 75 on the CP scale and .85 on the G scale. The viscosity in SSU can be read directly on the SSU scale. In this instance, the SSU viscosity is 400 (see dotted line).

If the viscosity value is given in centistokes (kinematic viscosity), it can be used directly on the viscosity correction nomograph. The relationship between the absolute viscosity and the kinematic viscosity is expressed by the following formula:

$$\text{Centipoises} = \text{Centistokes} \times \text{Specific Gravity}$$

© 2003 by Béla Lipták

TABLE A.2r

Approximate Viscosity Conversion Chart

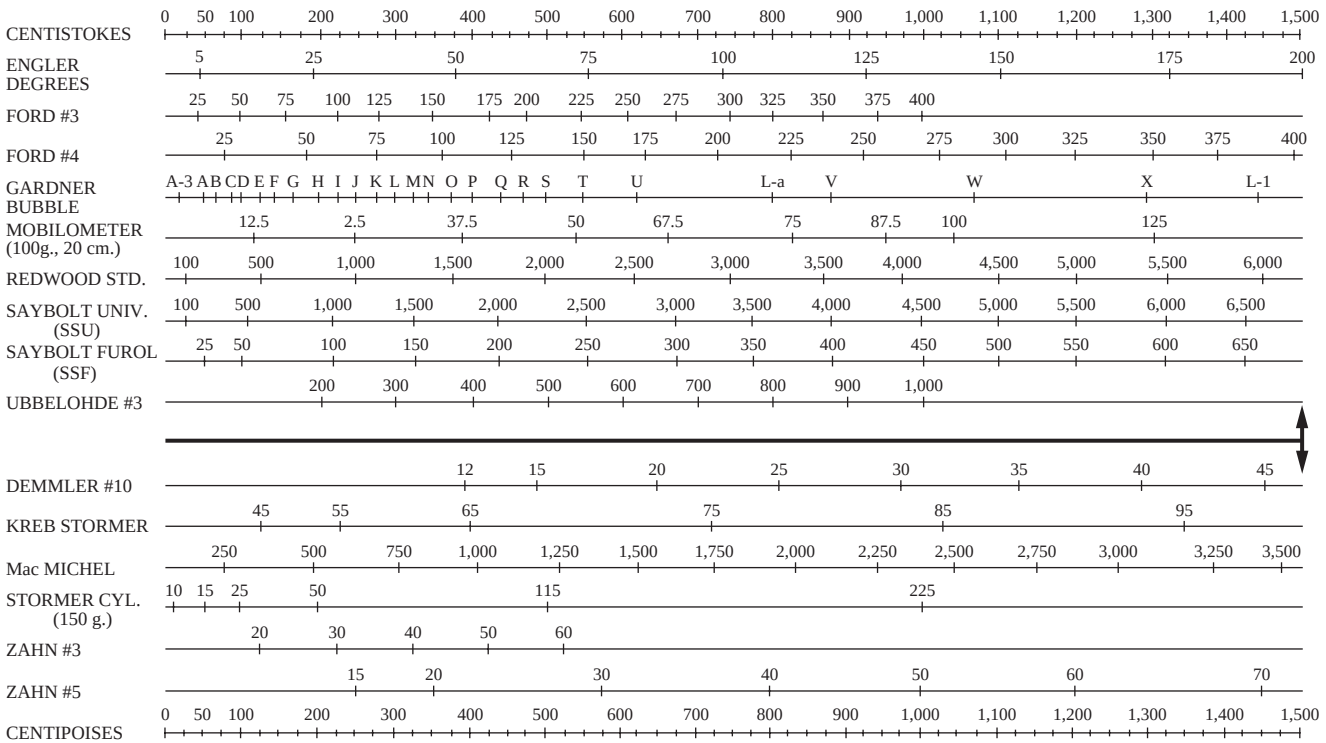

Note: Scales in lower section read directly in centipoises. Those above read in centistokes (to convert into centipoise, multiply by liquid specific gravity).

© 2003 by Béla Lipták

TABLE A.2s
Units of Volume

1 cubic in.
- = 0.00433 gal
- = 0.000579 cubic ft
- = 0.0000214 cubic yd

1 gal
- = 231 cubic in.
- = 0.1337 cubic ft.
- = 0.00495 cubic yd
- = 0.00000307 acre ft[a]

1 cubic ft
- = 1728 cubic in.
- = 7.48 gal
- = 0.0370 cubic yd
- = 0.0000230 acre ft

1 cubic yd
- = 46,656 cubic in.
- = 202.0 gal
- = 27 cubic ft.
- = 0.000620 acre ft

1 acre ft
- = 325,800 gal
- = 43,560 cubic ft
- = 1613 cubic yd

[a]acre ft of water is the volume in 1 ft of depth covering 1 acre.

TABLE A.2t
Units of Weight

1 g
- = 0.00229 oz[a]
- = 0.0001429 lb
- = 0.0000000714 tons

1 oz
- = 438 g
- = 0.0625 lb
- = 0.00003125 tons

1 lb
- = 7000 g
- = 16 oz
- = 0.000500 tons

1 ton
- = 14,000,000 g
- = 32,000 oz
- = 2000 lb

[a]Avoirdupois oz and lb and short ton of 2000 lb.

TABLE A.2u
Weight Conversion

1 kilogram = 2.2046 pounds, 1 pound = 0.4536 kilograms

lb	*kg/lb*	*kg*	*lb*	*kg/lb*	*kg*	*lb*	*kg/lb*	*kg*	*lb*	*kg/lb*	*kg*	*lb*	*kg/lb*	*kg*
2.205	1.0	0.454	6.614	3.0	1.361	11.023	5.0	2.268	15.432	7.0	3.175	19.841	9.0	4.082
2.425	1.1	0.499	6.834	3.1	1.406	11.243	5.1	2.313	15.653	7.1	3.221	20.062	9.1	4.128
2.646	1.2	0.544	7.055	3.2	1.452	11.464	5.2	2.359	15.873	7.2	3.266	20.282	9.2	4.173
2.866	1.3	0.590	7.275	3.3	1.497	11.684	5.3	2.404	16.094	7.3	3.311	20.503	9.3	4.218
3.086	1.4	0.635	7.496	3.4	1.542	11.905	5.4	2.449	16.314	7.4	3.357	20.723	9.4	4.264
3.307	1.5	0.680	7.716	3.5	1.588	12.125	5.5	2.495	16.535	7.5	3.402	20.944	9.5	4.309
3.527	1.6	0.726	7.937	3.6	1.633	12.346	5.6	2.540	16.755	7.6	3.447	21.164	9.6	4.355
3.748	1.7	0.771	8.157	3.7	1.678	12.566	5.7	2.586	16.975	7.7	3.493	21.385	9.7	4.400
3.968	1.8	0.816	8.377	3.8	1.724	12.787	5.8	2.631	17.196	7.8	3.538	21.605	9.8	4.445
4.189	1.9	0.862	8.598	3.9	1.769	13.007	5.9	2.676	17.416	7.9	3.583	21.826	9.9	4.491
												22.046	10.0	4.536
4.409	2.0	0.907	8.818	4.0	1.814	13.228	6.0	2.722	17.637	8.0	3.629			
4.630	2.1	0.953	9.039	4.1	1.860	13.448	6.1	2.767	17.857	8.1	3.674			
4.850	2.2	0.998	9.259	4.2	1.905	13.669	6.2	2.812	18.078	8.2	3.720			
5.071	2.3	1.043	9.480	4.3	1.950	13.889	6.3	2.858	18.298	8.3	3.765			
5.291	2.4	1.089	9.700	4.4	1.996	14.109	6.4	2.903	18.519	8.4	3.810			
5.512	2.5	1.134	9.921	4.5	2.041	14.330	6.5	2.948	18.739	8.5	3.856			
5.732	2.6	1.179	10.141	4.6	2.087	14.550	6.6	2.994	18.960	8.6	3.901			
5.952	2.7	1.225	10.362	4.7	2.132	14.771	6.7	3.039	19.180	8.7	3.946			
6.173	2.8	1.270	10.582	4.8	2.177	14.991	6.8	3.084	19.400	8.8	3.992			
6.393	2.9	1.315	10.803	4.9	2.223	15.212	6.9	3.130	19.621	8.9	4.037			

© 2003 by Béla Lipták

A.3 Chemical Resistance of Materials

© 2003 by Béla Lipták

TABLE A.3

Chemical Resistance of Materials

MATERIALS × — *Very Good Service* + — *Moderate Service* – — *Limited or Variable Service* O — *Unsatisfactory* *Blank — No Information* *CHEMICALS Solids Assumed in Solution Room Temperatures Assumed Unless Otherwise Stated*	METALS											CARBONS & CERAMICS		RUBBERS			THERMOPLASTICS					THERMOSETTING PLASTICS						WOODS				
	Carbon Steel; Fe	*Cast Iron & Ductile Iron; Fe*	*304 Stainless Steel; Fe, 18Cr, 8Ni*	*316 Stainless Steel; Fe 16Cr, 10Ni, 2Mo*	*347 Stainless Steel; Fe, 17Cr, 9Ni; (Cx10)Cb*	*Ni-Resist Iron; Fe 14Ni, 2Cr, 2Si*	*Durimet 20; Carpenter 20; Fe; 4Cu, 20Cr, 29Ni, 2Mo. 1Si*	*Worthite; 3Mo, 2Cu, Fe, 20Cr, 24Ni, 3Si*	*Durorpm; Fe, 14Si; Durichlor, Fe, 14Si, 3Mo**	*Copper; Brass; Bronzes; Everdur*	*Aluminum; Al (and Alloys)*	*Lead; Pb*	*Monel; 67Ni, 30Cu, 1.4Fe*	*Nickel; Ni*	*Inconel; 76Ni, 15Cr, 8Fe*	*Hastelloy B; Ni, 26Mo, 4Fe*	*Hastelloy C; Ni, 16Mo, 4Fe,14Cr, 4W*	*Hastelloy D; Ni, 8Si, 3Cu*	*Chlorimet 3; 3Fe, 1Si, 60Ni,18Mo, 18Cr*	*Chlorimet 2; 63Ni, 32Mo, 3Fe, 1Si*	*Stellite; Co, 28Cr, 4W*	*Zirconium; Zr*	*Tantalum; Ta*	*Silver; Ag*	*Platinum; Pt*	*Dowmetal; (Mg alloys)*	*Titanium; Ti*	*Molybdenum; Mo*	*Carbon & Graphite*	*Glass, "Pyrex" brand*	*Silicaware*	*Silicate Cements*	*Chemical Stoneware*	*Transite (asbestos & cement)*	*Chemical Porcelain*	*Concrete—Unbonded*	*Concrete—Motor Bonded*	*Hard Rubber (Natural)*	*Soft Rubber (Natural)*	*Neoprene*	*Butadiene Derivatives*	*Nitrile Rubber (Chemigum)*	*Viton*	*Asphaltic, Bitumastic*	*Cellulose Acetate*	*Cellulose Acetatebutyrate*	*Ethyl Cellulose (Ethocel)*	*Cellulose Nitrate*	*Acrylic (Lucite, Plexiglas)*	*Coumarone Resins*	*Polyethylene*	*Polyvinyl Chloride, Rigid or Unplasticized*	*Tygon (PVC & Copolymers)*	*Saran (Vinyl Chloride, Vinylidene Chloride)*	*Kel-F (Polytrifluorochloroethylene)*	*Teflon (Polytetrafluoroethylene)*	*Uscolite CP (Styrene–Acrylonitrile–Butadiene)*	*Penton (Chlorinated Polyether)*	*Shellac Compounds*	*Organic Polysulfides*	*Polystyrene (Styron)*	*Vinylidene Chlorides*	*Vinyl Chloride Acetates*	*Cast Phenol Formaldehyde*	*Haveg 41 (Phenolic w. Asbestos)*	*Heresite (Phenol Formaldehyde)*	*Molded Phenolformald (Durez)*	*Phenol Furfural Plastics*	*Urea Formaldehyde*	*Casein Plastics*	*Epoxy Resins*	*Furane Resins (Haveg 61, Duralon)*	*Silicone Resins*	*Permanite (Furan, Glass Fiber)*	*Nylon (Adipic Acid–Hexameth, Diamine)*	*Durcon 6 (Modified Epoxy)*	*Cypress*	*Fir*	*Maple*	*Oak*	*Pine*	*Redwood*
Acetic Acid, 100% CH_3COOH	O	–	+	×	–	O	×	×	×	O	×	O	–	+	–	×	×	×	×	×	×	–	–	O	×	×	×	O										

TABLE A.3 Continued

Chemical Resistance of Materials

MATERIALS × — *Very Good Service* + — *Moderate Service* – — *Limited or Variable Service* O — *Unsatisfactory* *Blank — No Information* *CHEMICALS* *Solids Assumed in Solution* *Room Temperatures Assumed* *Unless Otherwise Stated*	METALS										CARBONS & CERAMICS		RUBBERS		THERMOPLASTICS				THERMOSETTING PLASTICS					WOODS				
	Carbon Steel; Fe *Cast Iron & Ductile Iron; Fe* *304 Stainless Steel; Fe, 18Cr, 8Ni* *316 Stainless Steel; Fe 16Cr, 10Ni, 2Mo* *347 Stainless Steel; Fe, 17Cr, 9Ni; (Cx10)Cb*	*Ni-Resist Iron; Fe 14Ni, 2Cr, 2Si* *Durimet 20; Carpenter 20; Fe; 4Cu, 20Cr, 29Ni, 2Mo. 1Si* *Worthite; 3Mo, 2Cu, Fe, 20Cr, 24Ni, 3Si* *Durorprn; Fe, 14Si; Durichlor, Fe, 14Si, 3Mo** *Copper; Brass; Bronzes; Everdur*	*Aluminum; Al (and Alloys)* *Lead; Pb* *Monel; 67Ni, 30Cu, 1.4Fe* *Nickel; Ni* *Inconel; 76Ni, 15Cr, 8Fe*	*Hastelloy B; Ni, 26Mo, 4Fe* *Hastelloy C; Ni, 16Mo, 4Fe,14Cr, 4W* *Hastelloy D; Ni, 8Si, 3Cu* *Chlorimet 3; 3Fe, 1Si, 60Ni,18Mo, 18Cr* *Chlorimet 2; 63Ni, 32Mo, 3Fe, 1Si*	*Stellite; Co, 28Cr, 4W* *Zirconium; Z* *Tantalum; Ta* *Silver; Ag* *Platinum; Pt*	*Downetal; (Mg alloys)* *Titanium; Ti* *Molybdenum; Mo*	*Carbon & Graphite* *Glass, "Pyrex" brand* *Silicaware* *Silicate Cements*	*Chemical Stoneware* *Transite (asbestos & cement)* *Chemical Porcelain* *Concrete—Unbonded* *Concrete—Motor Bonded*	*Hard Rubber (Natural)* *Soft Rubber (Natural)* *Neoprene* *Butadiene Derivatives* *Nitrile Rubber (Chemigum)*	*Viton* *Asphaltic, Bitumastic* *Cellulose Acetate* *Cellulose Acetatebutyrate* *Ethyl Cellulose (Ethocel)*	*Cellulose Nitrate* *Acrylic (Lucite, Plexiglas)* *Coumarone Resins* *Polyethylene* *Polyvinyl Chloride, Rigid or Unplasticized*	*Tygon (PVC & Copolymers)* *Saran (Vinyl Chloride, Vinylidene Chloride)* *Kel-F (Polytrifluorochloroethylene)* *Teflon (Polytetrafluoroethylene)* *Uscolite CP (Styrene–Acrylonitrile–Butadiene)*	*Penton (Chlorinated Polyether)* *Shellac Compounds* *Organic Polysulfides* *Polystyrene (Styron)* *Vinylidene Chlorides*	*Vinyl Chloride Acetates* *Cast Phenol Formaldehyde* *Haveg 41 (Phenolic w. Asbestos)* *Heresite (Phenol Formaldehyde)* *Molded Phenolformald (Durez)*	*Phenol Furfural Plastics* *Urea Formaldehyde* *Casein Plastics* *Epoxy Resins* *Furane Resins (Haveg 61, Duralon)*	*Silicone Resins* *Permanite (Furan, Glass Fiber)* *Nylon (Adipic Acid–Hexameth, Diamine)* *Durcon 6 (Modified Epoxy)* *Cypress*	*Fir* *Maple* *Oak* *Pine* *Redwood*
Amyl Chloride, $C_5H_{11}Cl$	×	– – –	O	– + –	×	× – × ×	× × ×	× × × × ×	× × × × ×			×	– O	– O	×	×	×	×	×	–	× ×						
Antimony Trichloride, $SbCl_3$	O	O O O	O × × × ×	– + –	×	– × × × ×	× × ×	× × × × ×	× × × × ×			×	×		×	×	×	×	×		× ×						
Arsenic Acid, $HAsO_8$	O	– –	× × × × ×	–	×	× × ×	× × ×	× × × × ×	× × × × ×			×	×		×	×	×	×	×		×						
Barium Carbonate, $BaCO_3$		× × ×	O	+ × ×	×	× × × × ×	× ×	× × × × ×	× × × × ×	× ×		×	×		×	×	×	×	×		×						
Barium Hydroxide, $Ba(OH)_2$	×	×	O	× ×	+	× × × × + O	× × ×	+ + + × ×	× × × × ×		+		×		×	×	×	×	×		×						
Barium Sulfide, BaS	O	× ×	O	–		× × × × × O	–	× ×	× × × × ×				×		×	×	×	×	×		×						
Benzaldehyde, C_6H_5CHO	×	× ×	– O			×	× × ×	× ×	× × × × ×				O O O ×		×		×	×	×		– O						
Benzene, C_6H_6	+ +	× × ×	– O	+ + + ×	×	×	× × ×	+ + + × ×	× × × × ×	×	+	×	O O O O	– O – O O	O		– O	×	×		+	O						
Benzoic Acid, C_6H_5COOH	O	× × +	× O	+ + +		× × × × ×		× × × × ×	× × × × ×				× ×		×	×	×	×	×		×						
Borax, $Na_2B_4O_7$	× –	× × ×	× ×	× ×		× × × ×			× ×				× × ×		×	×	×	×	×		× ×						
Boric Acid, H_3HO_3	O O	+ + +	–	× × × +		+ + + + + ×	× × × × ×	×	× × × ×				× × ×		×		×	×	×		×						
Bromine, Wet, Br_2	O	O O O	O O O O O			O – O O O	O × O × O	–	× O –	O			O × ×		×		×	×	×		–						
Butanol, C_4H_2OH	×	× ×		×		× × × ×	× × × × ×						– – –		×		×	×	×		×						
Butyl Acetate, $C_4H_9COOCH_3$	–	×		× × × ×		× × +	× × × × ×				–		O O O O		O O O O O	O O		O	× ×		+						
Butyric Acid, C_3H_7COOH	O O	O × O		× × × –		– O + + +	× × × × ×						× – O		O O			O	– × ×		×						
Calcium Bisulfate, $CaHSO_4$	O	O ×	O ×	O		O O O		× ×					×						× ×		×						
Calcium Bisulfate, $CaHSO_3$	×	O ×	O × × O	–		– × O		× ×					× × × ×						× × × × ×		×						
Calcium Carbonate, $CaCO_3$	×	× ×	× × × × ×			O × × × × ×	× × × × ×						× × –		×				× × ×		×						
Calcium Chlorate, $CaClO_3$		– × O	+ – + –			+ + +	+ + + +								×				× × ×		×						
Calcium Chloride, $CaCl_2$	+ +	– – –	– + × × +		–	O + + +	+ × + × ×	– × ×					× × × × ×		× × × × ×		× × × × ×		× × × × ×		×						
Calcium Hydroxide, $Ca(OH)_2$	×	× × ×	× × × + +		–	× × ×	× × × × ×						× × ×		× ×				× × × × ×		×						
Calcium Hypochlorite, $Ca(OCl)_2$	–	O O – –	– – – ×	O	O	O O O O O	O – O – O	O × ×	× × × O			×	× × O × –		–		× ×		× × × × ×		×						
Calcium Sulfate, $CaSO_4$	–	× ×		× × × ×	–	+	+ + + × ×						× × ×		× ×				× × × × ×		×						
Carbon Dioxide (Dry), CO_2	×	× × ×	× ×	× ×	×	× × × × ×	× ×	× ×			×		× × ×		×				× × × × ×		×						
Carbon Dioxide (Wet or H_2CO_3)	– –	× × ×	–	× × × –	–	– – × ×	× × × × ×	×	× ×		× × ×	× × × × ×	× × × ×		×				× × × × ×		×						
Carbon Disulfide, CS_2	× +	+ + ×	–	+ + + +		– + + + +	×	× –	× ×		× × × ×	×	O O O ×		× O O O O		– × ×		– –		×						

**Note*: Duriron is as shown. Durichlor is also satisfactory on chlorides and HCl.
**Durcon 5 would be the preferred formula.

© 2003 by Béla Lipták

TABLE A.3 Continued

Chemical Resistance of Materials

MATERIALS × — *Very Good Service* + — *Moderate Service* – — *Limited or Variable Service* ○ — *Unsatisfactory* *Blank — No Information* *CHEMICALS* *Solids Assumed in Solution* *Room Temperatures Assumed* *Unless Otherwise Stated*	METALS							CARBONS & CERAMICS		RUBBERS	THERMOPLASTICS			THERMOSETTING PLASTICS				WOODS				
	Carbon Steel; Fe *Cast Iron & Ductile Iron; Fe* *304 Stainless Steel; Fe, 18Cr, 8Ni* *316 Stainless Steel; Fe 16Cr, 10Ni, 2Mo* *347 Stainless Steel; Fe, 17Cr, 9Ni; (Cx10)Cb*	*Ni-Resist Iron; Fe, 14Ni, 2Cr, 2Si* *Duriron 20; Carpenter 20; Fe; 4Cu, 20Cr, 29Ni, 2Mo. 1Si* *Worthite; 3Mo, 2Cu, Fe, 20Cr, 24Ni, 3Si* *Durorpm; Fe, 14Si; Durichlor, Fe, 14Si, 3Mo**	*Copper; Brass; Bronzes; Everdur* *Aluminum; Al (and Alloys)* *Lead; Pb* *Monel; 67Ni, 30Cu, 1.4Fe* *Nickel; Ni* *Inconel; 76Ni, 15Cr, 8Fe*	*Hastelloy B; Ni, 26Mo, 4Fe* *Hastelloy C; Ni, 16Mo, 4Fe,14Cr, 4W* *Hastelloy D; Ni, 8Si, 3Cu* *Chlorimet 3; 3Fe, 1Si, 60Ni,18Mo, 18Cr* *Chlorimet 2; 63Ni, 32Mo, 3Fe, 1Si*	*Stellite; Co, 28Cr, 4W* *Zirconium; Z* *Tantalum; Ta* *Silver; Ag* *Platinum; Pt*	*Dowmetal; (Mg alloys)* *Titanium; Ti* *Molybdenum; Mo*	*Carbon & Graphite* *Glass, "Pyrex" brand* *Silicaware* *Silicate Cements*	*Chemical Stoneware* *Transite (asbestos & cement)* *Chemical Porcelain* *Concrete—Unbonded* *Concrete—Mator Bonded*	*Hard Rubber (Natural)* *Soft Rubber (Natural)* *Neoprene* *Butadiene Derivatives* *Nitrile Rubber (Chemigum)*	*Viton* *Asphaltic, Bitumastic* *Cellulose Acetate* *Cellulose Acetatebutyrate* *Ethyl Cellulose (Ethocel)*	*Cellulose Nitrate* *Acrylic (Lucite, Plexiglas)* *Coumarone Resins* *Polyethylene* *Polyvinyl Chloride, Rigid or Unplasticized*	*Tygon (PVC & Copolymers)* *Saran (Vinyl Chloride, Vinylidene Chloride)* *Kel-F (Polytrifluorochloroethylene)* *Teflon (Polytetrafluoroethylene)* *Uscolite CP (Styrene–Acrylonitrile–Butadiene)*	*Penton (Chlorinated Polyether)* *Shellac Compounds* *Organic Polysulfides* *Polystyrene (Styron)* *Vinylidene Chlorides*	*Vinyl Chloride Acetates* *Cast Phenol Formaldehyde* *Haveg 41 (Phenolic w. Asbestos)* *Heresite (Phenol Formaldehyde)* *Molded Phenolformald (Durez)*	*Phenol Furfural Plastics* *Urea Formaldehyde* *Casein Plastics* *Epoxy Resins* *Furane Resins (Haveg 61, Duralon)*	*Silicone Resins* *Permanite (Furan, Glass Fiber)* *Nylon (Adipic Acid–Hexameth, Diamine)* *Durcon 6 (Modified Epoxy)* *Cypress*	*Fir* *Maple* *Oak* *Pine* *Redwood*
Magnesium Chloride, $MgCl_2$	– – – + –	× × × × +	– ○ + + +	× × × × × ×	–	×	× × ×	× × × × × ×	× × × × ×	× × × ×	× × × ×	× × × × ×	× × × × × ×	× × × × × ×	× ×	× ×	× ×					
Magnesium Hydroxide, $Mg(OH)_2$	× × × +	× × × + –	○ × × ×	× × × × × ×	×	× ×	× ×	× × × × × ×	×	× ×	×	× × × × ×	×	× ×	×							
Magnesium Sulfate, $MgSO_4$	+ ○ + + +	× × × × +	× + + + + +	× + × × × ×	× × ×	×	×	× × × × × ×	×	× × × ×	× × × ×	× × × × ×	×	× ×	× ×							
Maleic Acid; $CO_2HC_2H_2CO_2H$	○ × ×	× × ×		×	× ×	×		×	×	×	+ ○		×	×								
Malic Acid, CO_2HCH_2 $CHOHCO_2H$	○ × × ×	+ × ○	– + + +	× × × × ×	× ×	×		× ×	×	× × × ×	–	×	×	×								
Mercuric Chloride, $HgCl_2$	○ ○ ○ ○	– – + ○	○ – – +	○ × ○ + ○	× × ○	×		×	×	× –	× × ×	×	×									
Mercury, Hg	× × × ×	× × ○	○ ○ + + ×	× × × × × ×	○	–		×	×		× ×	× ×	×									
Methanol, (Conc.), CH_3OH	+ + + + +	× × × × +	– + + + +	× × + × ×	× ×			× ×	×	– × – ×	– ×	○ – ×	×	×								
Methanol, (Dilute)	–	× × –	–	× × – × ×	×			×	×	× ×		×	×	×								
Methyl Chloride, CH_3Cl	○ – – +	× × × ×	× × × × ×	× ×	×			×	×	○ ○	– ○	○	×									
Naphtha, Petroleum	× × × ×	× × ×	× + + +	× × × × × ×	×	×		× × ×	×	– ○ × ×	+ ○	× ×	×	×	– –	–	–					
Nickel Chloride, $NiCl_2$	○ – –	+ ○ + –	○ – ×	○ × ○ × ×	× ×	×		× ×	×	× ×	× ×	× ×	×	×								
Nickel Sulfate, $NiSO_4$	○ ○ – –	× × × +	– + + – –	○ + ○ × ×	× ×	×		× ×	×	× × ×	× ×	× ×	×	×	–							
Nitrating Acid (>15% H_2SO_4)	× × – – –	× × × ○	○ ○ ○	○ × ○ × ×	× – – ×	–		○ ×	×	– –	○	○	○	×								
Nitrating Acid (<15% H_2SO_4)	○ – – –	× × × ○	○ ○ ○	○ × ○ × ×	× – – ○ ×	×		○ ×	×	– –	○	○	–	×								
Nitrating Acid (<15% HNO_3)	○ – ○ –	× × ○	○ ○ ○	○ × ○ × ○	× ○ – ○ ×	–		○ ×	×	– –	○	○	–	×								
Nitrating Acid (>1% Acid)	○ – × –	× × ○	○ ○ ○	○ × ○ ×	× ○ – ○ ×			○ ×	×	– –	○	○	–	×								
Nitric Acid (Conc.), HNO_3	○ ○ + + ×	× × × ○	– – ○ ○ –	○ + ○ × ○	× × × ○ ×	× +		○ × × ×	×	○ ○ ○ ○ ○	○ ○	○ ○	○ – × × ○	○	○ ○	○ ○	○	○	○ ○	– ○ ○ ×		
Nitric Acid, Dilute	○ ○ × × ×	○ × × × ○	○ ○ ○ ○ ○	○ × ○ × ○	× × ○ × ×	○		– × ×	×	– ○ ○ × ○	– –	–	– × × × ×	+	×	–	–	– – – × –	–	○	– ○ ×		
Nitrobenzene, $C_6N_5NO_2$	× × ×	× × ×	○	× ×	×			×	×	○ ○ ○	○ ○		– ○ × × ×	+							×	
Nitrous Acid, HNO_2	○ × × –	× × × ×	× ○	×	×			× ×	×	– ○ ○ ×	×		× × ×	×	×						×	
Oleic Acid, C_8H_{17} CH: $CH(CH_2)_7CO_2H$	– – – × ×	– × × × –	× ○ × × ×	× × × × × ×	×	×		× × ×	× × × × ×	○ ○ ○ ×	+ ○ × ×	×	○ ×	× × × × ×	×	×	×	× – × × ×	– ×	×	× × ×		–
Oxalic Acid, CO_2HCO_2H	○ ○ – – –	– × × × +	– ○ + – ×	+ + + × ×	× × × × ×	–		× × × ×	× × × ×	× × – ×	– ×		× ×	× × × × ×	×				×	×	× ○ ×		
Phenol (Conc.), C_6H_5OH	+ + – × –	× × × × ○	– – + + ×	+ + + × ×	× × × × ×	× –		× × ×	× × × ×	– ○ – ×	× ○ ○ ○ –	×	– – × × ○	+	○	–		– ×		× ○ ×		
Phenol (Dilute)	+ + × × ×	× × –	× – + + –	+ + + × ×	×			×	×	– –	–	×	– – × × ○		○	×	– ×			×		
Phosphoric Acid (100%), H_3PO_4	○ ○ – – ×	× ×	○ + – ○ –	+ × × × ×	× × × + ×		×	+ – ×	× × × × ×	× × × ×	× × ○		× ×	×	×	×		×		– – – ×		
Phosphoric Acid (>45% Hot)	○ ○ ○ ○ ×	○ × × × ○	○ + ○ ○ ○	– – – × ×	× – × ×			× – ×	○	– – – ×	+		– ×	×	× × ○	○	× ×			○ ×		

**Note*: Duriron is as shown. Durichlor is also satisfactory on chlorides and HCl.
**Durcon 5 would be the preferred formula.

© 2003 by Béla Lipták

TABLE A.3 Continued

Chemical Resistance of Materials

MATERIALS × — *Very Good Service* + — *Moderate Service* – — *Limited or Variable Service* ○ — *Unsatisfactory* *Blank — No Information* *CHEMICALS Solids Assumed in Solution Room Temperatures Assumed Unless Otherwise Stated*	METALS									CARBONS & CERAMICS		RUBBERS		THERMOPLASTICS				THERMOSETTING PLASTICS					WOODS				
	Carbon Steel; Fe	*Cast Iron & Ductile Iron; Fe*	*304 Stainless Steel; Fe, 18Cr, 8Ni*	*316 Stainless Steel; Fe 16Cr, 10Ni, 2Mo*	*347 Stainless Steel; Fe, 17Cr, 9Ni; (Cx10)Cb*	*Ni-Resist Iron; Fe 14Ni, 2Cr, 2Si*	*Durimet 20; Carpenter 20; Fe, 4Cu, 20Cr, 29Ni, 2Mo, 1Si*	*Worthite; 3Mo, 2Cu, Fe, 20Cr, 24Ni, 3Si*	*Durorpm; Fe, 14Si; Durichlor, Fe, 14Si, 3Mo**	*Copper; Brass; Bronzes; Everdur*	*Aluminum; Al (and Alloys)*	*Lead; Pb*	*Monel; 67Ni, 30Cu, 1.4Fe*	*Nickel; Ni*	*Inconel; 76Ni, 15Cr, 8Fe*	*Hastelloy B; Ni, 26Mo, 4Fe*	*Hastelloy C; Ni, 16Mo, 4Fe,14Cr, 4W*	*Hastelloy D; Ni, 8Si, 3Cu*	*Chlorimet 3; 3Fe, 1Si, 60Ni,18Mo, 18Cr*	*Chlorimet 2; 63Ni, 32Mo, 3Fe, 1Si*	*Stellite; Co, 28Cr, 4W*	*Zirconium; Z*	*Tantalum; Ta*	*Silver; Ag*	*Platinum; Pt*	*Dowmetal; (Mg alloys)*	*Titanium; Ti*	*Molybdenum; Mo*	*Carbon & Graphite*
Phosphoric Acid (>45% Cold)	○	○	–	×	×	–	×	–	×	○	○	+	–	–	–	+	×	+	×	×	×	×	×	×	×	×	–	–	×
Phosphoric Acid (<45% Cold)	○	○	–	×	×	–	+	–	–	–	–	+	–	–	–	+	×	+	×	×	×	×	×	×	×	×	–	–	×
Phosphoric Anhydride, Dry or Moist	○		×	×			×		×										×	×									×
Phosphoric Anhydride Molten, P_2O_5	×		×	×			×		×	○	○		○	○					×	×									×
Phthalic Anhydride, $C_6H_4(CO)_2O$	×		×				×	×	×							×	×		×		×								×
Picric Acid, Solution, $HOC_6H_2(NO_3)_3$			×	×	+		×	×	×	○	–	–	○	○	○	×	×	×	×	×		×								×
Potassium Bromide, KBr	○		–	–			–	×	+	×	×	×	×	×	×					×		×	×							×
Potassium Carbonate, K_2CO_3	–		×	×			–	×	×	×	○	×	×	×	+	×	×	×	×	×		–								×
Potassium Chlorate, $KClO_3$	×		×	×			+		+	+	○	×	○	×	○					×										×
Potassium Chloride, KCl	×		–	–		×	×	×	×	–	–		+	+		×	×	×	×	×		×								×
Potassium Cyanide, KCN	×		×	×		×	×		×	○	○	×				×	×	×	×	×										×
Potassium Dichromate, $K_2Cr_2O_7$			×	×	–		×	×	×	×	○	×	○	×	×					×										×
Potassium Ferrocyanide, $K_4Fe(CN)_6$	○		×	×			×	×	×	×	–	×	×	×	×					×										×
Potassium Hydroxide, KOH	+	–	+	+	–	–	×	×	+	○	○	○	×	×	×	+	+	+	×	×		×								×
Potassium Nitrate, KNO_3	×		×	×	×		×	×	×	×	×	–	+	+	+	○	×	○	×	×										×
Potassium Permanganate, $KMnO_4$	+	+	+	+	+	×	○	–	+	+	○	×	○	×	○															×
Potassium Sulfate, K_2SO_4	×		+	+	+	×	×	×	×	+	×	×	+	+	+	+	+	×	×											×
Potassium Sulfide, K_2S	–		×	×		–	×		×																					×
Pyrogallol, $C_6H_3(OH)_3$			×	×			×		×	×					+	×	×	×	×	×										×
Silver Nitrate, $AgNO_3$			×	×		×	×	×	×	○	○			+		+	+	×	×											×
Sodium, Molten 210 −400°F	×	×	×	×	×		×	×	×		×		×	×	×	×	×		×											×
Sodium Acetate, $NaCH_3COO$	○		–	×			–	×	+		×	×	×	×	×															×
Sodium Bicarbonate, $NaHCO_3$	–		×	×	×	–	×	×	×	×	×	×	×	×	×															×
Sodium Bisulfate, $NaHSO_4$	○	○	–	×	×	–	○	×	+		×	×	×	×	×	×	–		×											×
Sodium Bisulfite, $NaHSO_3$	○		×	×		–	×	×			×	×	×	×	×	×	–	×	×											×

**Note*: Duriron is as shown. Durichlor is also satisfactory on chlorides and HCl.
**Durcon 5 would be the preferred formula.

© 2003 by Béla Lipták

TABLE A.3 Continued

Chemical Resistance of Materials

MATERIALS × — *Very Good Service* + — *Moderate Service* – — *Limited or Variable Service* ○ — *Unsatisfactory* *Blank — No Information* *CHEMICALS* *Solids Assumed in Solution* *Room Temperatures Assumed* *Unless Otherwise Stated*	METALS																CARBONS & CERAMICS		RUBBERS			THERMOPLASTICS					THERMOSETTING PLASTICS								WOODS					
	Carbon Steel; Fe	*Cast Iron & Ductile Iron; Fe*	*304 Stainless Steel; Fe, 18Cr, 8Ni*	*316 Stainless Steel; Fe 16Cr, 10Ni, 2Mo*	*347 Stainless Steel; Fe, 17Cr, 9Ni; (Cx10)Cb*	*Ni-Resist Iron; Fe, 14Ni, 2Cr, 2Si*	*Durimet 20; Carpenter 20; Fe; 4Cu, 20Cr, 29Ni, 2Mo. 1Si*	*Worthite; 3Mo, 2Cu, Fe, 20Cr, 24Ni, 3Si*	*Durorpm; Fe, 14Si; Durichlor, Fe, 14Si, 3Mo**	*Copper; Brass; Bronzes; Everdur*	*Aluminum; Al (and Alloys)*	*Lead; Pb*	*Monel; 67Ni, 30Cu, 1.4Fe*	*Nickel; Ni*	*Inconel; 76Ni, 15Cr, 8Fe*	*Hastelloy B; Ni, 26Mo, 4Fe*	*Hastelloy C; Ni, 16Mo, 4Fe,14Cr, 4W*	*Hastelloy D; Ni, 8Si, 3Cu*	*Chlorimet 3; 3Fe, 15i, 60Ni,18Mo, 18Cr*	*Chlorimet 2; 63Ni, 32Mo, 3Fe, 1Si*	*Stellite; Co, 28Cr, 4W*	*Zirconium; Z*	*Tantalum; Ta*	*Silver; Ag*	*Platinum; Pt*	*Dowmetal; (Mg alloys)*	*Titanium; Ti*	*Molybdenum; Mo*	*Carbon & Graphite*	*Glass, "Pyrex" brand*	*Silicaware*	*Silicate Cements*	*Chemical Stoneware*	*Transite (asbestos & cement)*	*Chemical Porcelain*	*Concrete—Unbonded*	*Concrete—Mator Bonded*	*Hard Rubber (Natural)*	*Soft Rubber (Natural)*	*Neoprene*	*Butadiene Derivatives*	*Nitrile Rubber (Chemigum)*	*Viton*	*Asphaltic, Bitumastic*	*Cellulose Acetate*	*Cellulose Acetatebutyrate*	*Ethyl Cellulose (Ethocel)*	*Cellulose Nitrate*	*Acrylic (Lucite, Plexiglas)*	*Coumarone Resins*	*Polyethylene*	*Polyvinyl Chloride, Rigid or Unplasticized*	*Tygon (PVC & Copolymers)*	*Saran (Vinyl Chloride, Vinylidene Chloride)*	*Kel-F (Polytrifluorochloroethylene)*	*Teflon (Polytetrafluoroethylene)*	*Uscolite CP (Styrene–Acrylonitrile–Butadiene)*	*Penton (Chlorinated Polyether)*	*Shellac Compounds*	*Organic Polysulfides*	*Polystyrene (Styron)*	*Vinylidene Chlorides*	*Vinyl Chloride Acetates*	*Cast Phenol Formaldehyde*	*Haveg 41 (Phenolic w. Asbestos)*	*Heresite (Phenol Formaldehyde)*	*Molded Phenolformald (Durez)*	*Phenol Furfural Plastics*	*Urea Formaldehyde*	*Casein Plastics*	*Epoxy Resins*	*Furane Resins (Haveg 61, Duralon)*	*Silicone Resins*	*Permanite (Furan, Glass Fiber)*	*Nylon (Adipic Acid–Hexameth, Diamine)*	*Durcon 6 (Modified Epoxy)*	*Cypress*	*Fir*	*Maple*	*Oak*	*Pine*	*Redwood*
Sodium Borate $NaBO_2$				×	×		×		×	×	–		+			×	×	×	×	×	×															

TABLE A.3 Continued

Chemical Resistance of Materials

MATERIALS × — *Very Good Service* + — *Moderate Service* – — *Limited or Variable Service* O — *Unsatisfactory* *Blank — No Information* *CHEMICALS* *Solids Assumed in Solution* *Room Temperatures Assumed* *Unless Otherwise Stated*	METALS										CARBONS & CERAMICS		RUBBERS	THERMOPLASTICS				THERMOSETTING PLASTICS				WOODS				
	Carbon Steel; Fe	*Cast Iron & Ductile Iron; Fe*	*304 Stainless Steel; Fe, 18Cr, 8Ni*	*316 Stainless Steel; Fe 16Cr, 10Ni, 2Mo*	*347 Stainless Steel; Fe, 17Cr, 9Ni; (Cx10)Cb*	*Ni-Resist Iron; Fe 14Ni, 2Cr, 2Si*	*Durimet 20; Carpenter 20; Fe; 4Cu, 20Cr, 29Ni, 2Mo. 1Si*	*Worthite; 3Mo, 2Cu, Fe, 20Cr, 24Ni, 3Si*	*Durorpm; Fe, 14Si; Durichlor, Fe, 14Si, 3Mo**	*Copper; Brass; Bronzes; Everdur*	*Aluminum; Al (and Alloys)*	*Lead; Pb*	*Monel; 67Ni, 30Cu, 1.4Fe*	*Nickel; Ni*	*Inconel; 76Ni, 15Cr, 8Fe*	*Hastelloy B; Ni, 26Mo, 4Fe*	*Hastelloy C; Ni, 16Mo, 4Fe,14Cr, 4W*	*Hastelloy D; Ni, 8Si, 3Cu*	*Chlorimet 3; 3Fe, 15i, 60Ni,18Mo, 18Cr*	*Chlorimet 2; 63Ni, 32Mo, 3Fe, 1Si*	*Stellite; Co, 28Cr, 4W*	*Zirconium; Z*	*Tantalum; Ta*	*Silver; Ag*	*Platinum; Pt*	*Downetal; (Mg alloys)*	*Titanium; Ti*	*Molybdenum; Mo*
Sulfuric Acid (Cold Conc.)	+	+	+	×	×	–	×	×	×	O	–	×	+			×	×	×	×	×	×	–	O	–			O	–
Sulfuric Acid (75%–95%)	+	+	–	O	×	–	×	×	×	×	O	×	O	+		×	×	×	–	×	×	–	O	–				
Sulfuric Acid (10%–75%)	O	O	O	O	O	–	×	×	×	×	O	×	–	O	–	×	×	×	I	×	×	–	O	×				
Sulfuric Acid (<10%)	O	O	O	–	×	–	×	×	×	O	O	–	–	I	–	×	×	×	I	×	×	–	O	I				
Sulfurous Acid, H_2SO_3	O	O	–	×	–	×	×	×	×	O	–	–	O	O	–	×	+	+	×	×	×	–	O	×				
Sulfuryl Chloride, SO_2Cl_2						+																						
Tannic Acid	–		×	×		×	×	×	×	×						×	–	×										
Tartaric Acid, $(CHOH\ COOH)_2$	–		×	×		×	×	×	×	×						×	×	×										
Toluene, $CH_3C_6H_5$	×		×			×	×	×	×	×						×	×	×										
Trichlorethylene, Dry, Cl_2CCHCl	–	–	–	×	–	–																						
Water, Fresh, H_2O	×		×	×		×	×	×	×	×																		
Water, Distilled Lab.	O		×	×		O	×		×	×																		
Zinc Chloride, $ZnCl_2$	O	O	O	–	O	–	×	×	×	O	O	–	+	+		+	+	+	+	+	+							
Zinc Sulfate, $ZnSO_4$	O	O	+	+	+	–	×	×	×	+	–	+	+	+		+	+	+	+	×	×							

MATERIALS × — *Very Good Service* + — *Moderate Service* – — *Limited or Variable Service* O — *Unsatisfactory* *Blank — No Information* *CHEMICALS* *Solids Assumed in Solution* *Room Temperatures Assumed* *Unless Otherwise Stated*	CARBONS & CERAMICS			RUBBERS			THERMOPLASTICS								THERMOSETTING PLASTICS												WOODS				
	Carbon & Graphite	*Glass, "Pyrex" brand*	*Silicaware*	*Silicate Cements*	*Chemical Stoneware*	*Transite (asbestos & cement)*	*Chemical Porcelain*	*Concrete—Unbonded*	*Concrete—Motor Bonded*	*Hard Rubber (Natural)*	*Soft Rubber (Natural)*	*Neoprene*	*Butadiene Derivatives*	*Nitrile Rubber (Chemigum)*	*Viton*	*Asphaltic, Bitumastic*	*Cellulose Acetate*	*Cellulose Acetaebutyrate*	*Ethyl Cellulose (Ethocel)*	*Cellulose Nitrate*	*Acrylic (Lucite, Plexiglas)*	*Coumarone Resins*	*Polyethylene*	*Polyvinyl Chloride, Rigid or Unplasticized*	*Tygon (PVC & Copolymers)*	*Saran (Vinyl Chloride, Vinylidene Chloride)*	*Kel-F (Polytrifluorochloroethylene)*	*Teflon (Polytetrafluoroethylene)*	*Uscolite CP (Styrene–Acrylonitrile–Butadiene)*	*Penton (Chlorinated Polyether)*	*Shellac Compounds*	*Organic Polysulfides*	*Polystyrene (Styron)*	*Vinylidene Chlorides*	*Vinyl Chloride Acetates*	*Cast Phenol Formaldehyde*	*Haveg 41 (Phenolic w. Asbestos)*	*Heresite (Phenol Formaldehyde)*	*Molded Phenolformald (Durez)*	*Phenol Furfural Plastics*	*Urea Formaldehyde*	*Casein Plastics*	*Epoxy Resins*	*Furane Resins (Haveg 61, Duralon)*	*Silicone Resins*	*Permanite (Furan, Glass Fiber)*	*Nylon (Adipic Acid–Hexameth, Diamine)*	*Durcon 6 (Modified Epoxy)*	*Cypress*	*Fir*	*Maple*	*Oak*	*Pine*	*Redwood*
Sulfuric Acid (Cold Conc.)	O	×	×							O	O	O			+										–	+				+	–																		

A.4 Composition of Metallic and Other Materials

TABLE A.4
Composition of Metallic and Other Materials

No.	*Material*	*Manufacturer*	*Composition or Description*
		Metals	
17	Aluminum		
19	Aloyco-20	Alloy Steel Products Co.	Fe; 19–21 Cr; 28–30 Ni; 4.0–4.5 Cu; 2.5–3.0 Mo; 1.5 max. Si; 0.65–0.85 Mn; 0.07 max. C
19a	720 Alloy	General Plate	20 Mn; 20 Ni; Cu
54–60	Brass		Various commercial grades ranging 60–65 Cu; 35–40 Zn; 0.5–3.0 Pb
63	Brass, red		85 Cu; 15 Zn
66	Bronze, comm.		90 Cu; 10 Zn
73	Bronze, phosphor, 5% A		94.8–95.5 Cu; 4.3–5 Sn; P
74	Bronze, phosphor, 8% C		Cu; 7–9 Sn; 0.03–0.25 P
75	Bronze, phosphor 10% D		89.5–90 Cu; 10–10.5 Sn; P
76	Bronze, phosphor, spec. free cutting		88 Cu; 4 Zn; 4 Sn; 4 Pb
81	CA-FA20	Cooper Alloy	Fe; 19–21 Cr; 28–30 Ni; 3.5 Mo; 4–4.5 Cu; 0.07 max. C
82	CA-MM	Cooper Alloy	67 Ni; 30 Cu; 1.4 Fe; 0.1 Si; 0.15 C
86	Cast iron		Ordinary unalloyed cast iron
88	Chlorimet 2	Duriron Co.	63 Ni; 32 Mo; 3 max. Fe; 0.15 max. C; 1 Si; 1 Mn
89	Chlorimet 3	Duriron Co.	60 Ni; 18 Mo; 18 Cr; 2 Fe; 0.07 max. C; 1 Si; 1 Mn
111	Copper		99.9+ Cu
112	Copper, Be		97.5 Cu; 2.15 Be; 0.35 Ni
119	Corrosiron	Pacific Fdry.	Fe; 14.5 Si
140	Durichlor	Duriron Co.	Fe; 0.85 C; 14.5 Si; 3 Mo; 0.35 Mn
141	Durimet 20	Duriron Co.	Fe; 20 Cr; 29 Ni; 0.07 max. C; 2 Mo; 4 Cu; 1 Si
142	Durimet T	Duriron Co.	Fe; 19 Cr; 22 Ni; 0.07 max. C; 2 Mo; 1 Cu; 1 Si
143	Duriron	Duriron Co.	Fe; 0.80 C; 14.5 Si; 0.35 Mn
148	Everdur 1000	Amer. Brass	94.9 Cu; 4 Si; 1.1 Mn
149	Everdur 1010	Amer. Brass	95.8 Cu; 3.1 Si; 1.1 Mn
150	Everdur 1015	Amer. Brass	98.25 Cu; 1.5 Si; 0.25 Mn
156	Gold		99.99 Au
156a	Green gold		75% Au; 25% Ag
159	Hastelloy A	Haynes Stellite	Ni; 17–21 Mo; 17–21 Fe
160	Hastelloy B	Haynes Stellite	Ni; 24–32 Mo; 3–7 Fe; 0.02–0.12 C
161	Hastelloy C	Haynes Stellite	Ni; 14–19 Mo; 4–8 Fe; 0.04–0.15 C; 12–16 Cr; 3–5.5 W
162	Hastelloy D	Haynes Stellite	Ni; 8–11 Si; 2–5 Cu; 1 max. Al
163	Stellite 1	Haynes Stellite	Co; 28–34 Cr; 11–15 W

© 2003 by Béla Lipták

TABLE A.4 Continued
Composition of Metallic and Other Materials

No.	*Material*	*Manufacturer*	*Composition or Description*
165	Stellite 6	Haynes Stellite	Co; 25–31 Cr; 3–6 W
184	Inconel	Int'l Nickel	79.5 Ni; 13 Cr; 6.5 Fe; 0.08 C; 0.2 Cu; 0.25 Mn
191	Lead		99.9 + Pb
192	Lead, antimonial		94 Pb; 6 Sb
193	Lead, antimonial		Pb; 4–12 Sb
196	Lead, chemical		99.93 Pb; 0.06 Cu
200	Lead, Te		99.88 Pb; 0.045 Te; 0.06 Cu
216	Monel	Int'l Nickel	67 Ni; 30 Cu; 1.4 Fe; 0.1 Si; 0.15 C
219	Muntz Metal		60 Cu; 40 Zn
224	Nickel	Int'l Nickel	99.4 Ni; 0.2 Mn; 0.1 Cu; 0.15 Fe; 0.05 Si
224a	Z-Nickel	Int'l Nickel	95 + Ni
226	Nickel–Silver 18% A		65 Cu; 18 Ni; 17 Zn
227	Nickel–Silver 18% B		55 Cu; 18 Ni; 27 Zn
227a	Ni-Span	Int'l Nickel	Ni, Ti, Cr, C, Mn, Si, Al
229	Ni-Hard	Int'l Nickel	Fe; 3.4 C; 1.5 Cr; 4.5 Ni; 0.6 Si
231	Ni-Resist	Int'l Nickel	Fe; 2.8 C; 14 or 20 Ni; 6 Cu (optional); 2 Cr; 2 Si
240	Platinum		99.99 Pt
268	Silver		99.9+ Ag
275	S.S. 301		Fe; 16–18 Cr; 6–8 Ni; 0.08–0.15 C
276	S.S. 302		Fe; 17–19 Cr; 8–10 Ni; 0.08–0.15 C
278	S.S. 303		Fe; 17–19 Cr; 8–10 Ni; 0.15 max. C; 0.07 min. P, S, Se; 0.6
279	S.S. 304		Fe; 18–20 Cr; 8–11 Ni; 0.08 max. C; 2 max. Mn
282	S.S. 310		Fe; 24–26 Cr; 19–22 Ni; 0.25 max. C
283	S.S. 316		Fe; 16–18 Cr; 10–14 Ni; 0.1 max. C; 1.75–2.75 Mo
284	S.S. 317		Fe; 17.5–20 Cr; 10–14 Ni; 0.1 max. C; 3–4 Mo
285	S.S. 321		Fe; 17–19 Cr; 8–11 Ni; Ti, 5xC min.
286	S.S. 347		Fe; 17–19 Cr; 9–12 Ni; Cb, 10xC min.
287	S.S. 403		Fe; 11.5–13 Cr; 0.15 max. C
290	S.S. 410		Fe; 11.5–13.5 Cr; 0.15 max. C
292	S.S. 416		Fe; 12–14 Cr; 0.15 max. C; 0.07 min. P, S, Se; 0.6 max. Zr, Mo
295	S.S. 430		Fe; 14–18 Cr; 0.12 max. C
303	S.S. 446		Fe; 23–27 Cr; 0.35 max. C; 0.25 max. N
360a	Steel		Plain carbon steel
368	Tantalum	Fansteel	99.9+ Ta
390	Worthite	Worthington Pump	Fe; 20 Cr; 24 Ni; 0.07 max. C; 3.25 Si; 3 Mo; 1.75 Cu; 0.5 Mn
		Carbon and Graphite	
401	Karbate (carbon)	National Carbon	Impervious carbon
402	Karbate (graphite)	National Carbon	Impervious graphite
		Ceramics	
611	Lapp Porcelain	Lapp Insulator Co.	Chemical porcelain
614	Pfaudler Glass Lining	Pfaudler Co.	Glass-lined steel equipment
615	Plate Glass		Polished plate glass, flat or bent
616	Pyrex	Corning Glass Wks.	Glass

© 2003 by Béla Lipták

TABLE A.4 Continued
Composition of Metallic and Other Materials

No.	*Material*	*Manufacturer*	*Composition or Description*
		Plastics	
700	Ace Saran	American Hard Rubber	Vinylidene chloride
710	Geon	B. F. Goodrich	Polyvinyl chloride
711	Haveg 41	Haveg Corp.	Phenolic-asbestos
712	Haveg 43	Haveg Corp.	Phenolic-graphite
713	Haveg 60	Haveg Corp.	Furan-asbestos
714	Haveg 63	Haveg Corp.	Furan-graphite
715	Heresite M 66	Heresite & Chem. Co.	Transparent molding powder
716	Heresite MF 66	Heresite & Chem. Co.	Black molding powder
717a	Kel-F	M. W. Kellogg	Polymerized trifluoroethylene
718	Koroseal	B. F. Goodrich	Plasticized polyvinyl chloride
731	Nylon FM-101	E. I. du Pont	Injection, compression and extrusion moldings (tubing, sheeting, wire covering, gasketing)
731a	Plastisol		Polyvinyl chloride
735	Polythene	E.I. du Pont	Polyethylene
740	Saran	Dow Chemical	Vinyl chloride-vinylidene chloride copolymer
740a	Sirvene	Chicago Rawhide	Synthetic rubber
742	Teflon	E.I. du Pont	Polymerized tetrafluoroethylene
746	Tygon	U.S. Stoneware	Synthetic compounds
		Rubber	
800	Ace Hard Rubber	American Hard Rubber	Vulcanized rubber
805	Butyl (GR-I)	Stanco Distributors	Solid copolymer of isobutylene and isoprene
820	Hycar (GR-A)	B. F. Goodrich	Nitrile type synthetic rubber
829	Neoprene	E. I. du Pont	Polymer of chloroprene
836	Natural (soft)		
837	Natural (hard)		
838	GR-S (soft)		
839	GR-S (hard)		
853	Thiokol (GR-P)	Thiokol Corp.	

© 2003 by Béla Lipták

A.5 Steam and Water Tables

© 2003 by Béla Lipták

TABLE A.5a

Dry Saturated Steam: Temperature Table

		Specific Volume, ft^3/lbm[a]			*Enthalpy, Btu/lbm*[a]			*Entropy, Btu/lbm R*[a]		
Temp., °F/°C	*Abs. Press., PSIA P*[a]	*Sat. Liquid* v_f	*Evap.* v_{fg}	*Sat. Vapor* v_g	*Sat. Liquid* h_f	*Evap.* h_{fg}	*Sat. Vapor* h_g	*Sat. Liquid* s_f	*Evap.* s_{fg}	*Sat. Vapor* s_g
32/0	0.08854	0.01602	3306	3306	0.00	1075.8	1075.8	0.0000	2.1877	2.1877
35/1.7	0.09995	0.01602	2947	2947	3.02	1074.1	1077.1	0.0061	2.1709	2.1770
40/4.4	0.12170	0.01602	2444	2444	8.05	1071.3	1079.3	0.0162	2.1435	2.1597
45/7.2	0.14752	0.01602	2036.4	2036.4	13.06	1068.4	1081.5	0.0262	2.1167	2.1429
50/10	0.17811	0.01603	1703.2	1703.2	18.07	1065.6	1083.7	0.0361	2.0903	2.1264
60/15.6	0.2563	0.01604	1206.6	1206.7	28.06	1059.9	1088.0	0.0555	2.0393	2.0948
70/21.1	0.3631	0.01606	867.8	867.9	38.04	1054.3	1092.3	0.0745	1.9902	2.0647
80/26.7	0.5069	0.01608	633.1	633.1	48.02	1048.6	1096.6	0.0932	1.9428	2.0360
90/32.2	0.6982	0.01610	468.0	468.0	57.99	1042.9	1100.9	0.1115	1.8972	2.0087
100/37.8	0.9492	0.01613	350.3	350.4	67.97	1037.2	1105.2	0.1295	1.8531	1.9826
110/43	1.2748	0.01617	265.3	265.4	77.94	1031.6	1109.5	0.1471	1.8106	1.9577
120/49	1.6924	0.01620	203.25	203.27	87.92	1025.8	1113.7	0.1645	1.7694	1.9339
130/54	2.2225	0.01625	157.32	157.34	97.90	1020.0	1117.9	0.1816	1.7296	1.9112
140/60	2.8886	0.01629	122.99	123.01	107.89	1014.1	1122.0	0.1984	1.6910	1.8894
150/66	3.718	0.01634	97.06	97.07	117.89	1008.2	1126.1	0.2149	1.6537	1.8685
160/71	4.741	0.01639	77.27	77.29	127.89	1002.3	1130.2	0.2311	1.6174	1.8485
170/77	5.992	0.01645	62.04	62.06	137.90	996.3	1134.2	0.2472	1.5822	1.8293
180/82	7.510	0.01651	50.21	50.23	147.92	990.2	1138.1	0.2630	1.5480	1.8109
190/88	9.339	0.01657	40.94	40.96	157.95	984.1	1142.0	0.2785	1.5147	1.7932
200/93	11.526	0.01663	33.62	33.64	167.99	977.9	1145.9	0.2938	1.4824	1.7762
210/90	14.123	0.01670	27.80	27.82	178.05	971.6	1149.7	0.3090	1.4508	1.7598
212/100	14.696	0.01672	26.78	26.80	180.07	970.3	1150.4	0.3120	1.4446	1.7566
220/104	17.186	0.01677	23.13	23.15	188.13	965.2	1153.4	0.3239	1.4201	1.7440
230/110	20.780	0.01684	19.365	19.382	198.23	958.8	1157.0	0.3387	1.3901	1.7288
240/116	24.969	0.01692	16.306	16.323	208.34	952.2	1160.5	0.3531	1.3609	1.7140
250/121	29.825	0.01700	13.804	13.821	218.48	945.5	1164.0	0.3675	1.3323	1.6998
260/127	35.429	0.01709	11.746	11.763	228.64	938.7	1167.3	0.3817	1.3043	1.6860
270/132	41.858	0.01717	10.044	10.061	238.84	931.8	1170.6	0.3958	1.2769	1.6727
280/138	49.203	0.01726	8.628	8.645	249.06	924.7	1173.8	0.4096	1.2501	1.6597
290/143	57.556	0.01735	7.444	7.461	259.31	917.5	1176.8	0.4234	1.2238	1.6472
300/149	67.013	0.01745	6.449	6.466	269.59	910.1	1179.7	0.4369	1.1980	1.6350
310/154	77.68	0.01755	5.609	5.626	279.92	902.6	1182.5	0.4504	1.1727	1.6231
320/160	89.66	0.01765	4.896	4.914	290.28	894.9	1185.2	0.4637	1.1478	1.6115
330/166	103.06	0.01776	4.289	4.307	300.68	887.0	1187.7	0.4769	1.1233	1.6002
340/171	118.01	0.01787	3.770	3.788	311.13	879.0	1190.1	0.4900	1.0992	1.5891

© 2003 by Béla Lipták

TABLE A.5a Continued

Dry Saturated Steam: Temperature Table

		Specific Volume, ft^3/lbm^a			Enthalpy, Btu/lbm^a			Entropy, $Btu/lbm\ R^a$		
Temp., °F/°C	Abs. Press., PSIA P^a	Sat. Liquid v_f	Evap. v_{fg}	Sat. Vapor v_g	Sat. Liquid h_f	Evap. h_{fg}	Sat. Vapor h_g	Sat. Liquid s_f	Evap. s_{fg}	Sat. Vapor s_g
350/177	134.63	0.01799	3.324	3.342	321.63	870.7	1192.3	0.5029	1.0754	1.5783
360/182	153.04	0.01811	2.939	2.957	332.18	862.2	1194.4	0.5158	1.0519	1.5677
370/188	173.37	0.01823	2.606	2.625	342.79	853.5	1196.3	0.5286	1.0287	1.5573
380/193	195.77	0.01836	2.317	2.335	353.45	844.6	1198.1	0.5413	1.0059	1.5471
390/199	220.37	0.01850	2.0651	2.0836	364.17	835.4	1199.6	0.5539	0.9832	1.5371
400/204	247.31	0.01864	1.8447	1.8633	374.97	826.0	1201.0	0.5664	0.9608	1.5272
410/210	276.75	0.01878	1.6512	1.6700	385.83	816.3	1202.1	0.5788	0.9386	1.5174
420/216	308.83	0.01894	1.4811	1.5000	396.77	806.3	1203.1	0.5912	0.9166	1.5078
430/221	343.72	0.01910	1.3308	1.3499	407.79	796.0	1203.8	0.6035	0.8947	1.4982
440/227	381.59	0.01926	1.1979	1.2171	418.90	785.4	1204.3	0.6158	0.8730	1.4887
450/232	422.6	0.0194	1.0799	1.0993	430.1	774.5	1204.6	0.6280	0.8513	1.4793
460/238	466.9	0.0196	0.9748	0.9944	441.4	763.2	1204.6	0.6402	0.8298	1.4700
470/243	514.7	0.0198	0.8811	0.9009	452.8	751.5	1204.3	0.6523	0.8083	1.4606
480/249	566.1	0.0200	0.7972	0.8172	464.4	739.4	1203.7	0.6645	0.7868	1.4513
490/254	621.4	0.0202	0.7221	0.7423	476.0	726.8	1202.8	0.6766	0.7653	1.4419
500/260	680.8	0.0204	0.6545	0.6749	487.8	713.9	1201.7	0.6887	0.7438	1.4325
520/271	812.4	0.0209	0.5385	0.5594	511.9	686.4	1198.2	0.7130	0.7006	1.4136
540/282	962.5	0.0215	0.4434	0.4649	536.6	656.6	1193.2	0.7374	0.6568	1.3942
560/293	1133.1	0.0221	0.3647	0.3868	562.2	624.2	1186.4	0.7621	0.6121	1.3742
580/304	1325.8	0.0228	0.2989	0.3217	588.9	588.4	1177.3	0.7872	0.5659	1.3532
600/316	1542.9	0.0236	0.2432	0.2668	617.0	548.5	1165.5	0.8131	0.5176	1.3307
620/327	1786.6	0.0247	0.1955	0.2201	646.7	503.6	1150.3	0.8398	0.4664	1.3062
640/338	2059.7	0.0260	0.1538	0.1798	678.6	452.0	1130.5	0.8679	0.4110	1.2789
660/349	2365.4	0.0278	0.1165	0.1442	714.2	390.2	1104.4	0.8987	0.3485	1.2472
680/360	2708.1	0.0305	0.0810	0.1115	757.3	309.9	1067.2	0.9351	0.2719	1.2071
700/371	3093.7	0.0369	0.0392	0.0761	823.3	172.1	995.4	0.9905	0.1484	1.1389
705.4/374.1	3206.2	0.0503	0	0.0503	902.7	0	902.7	1.0580	0	1.0580

Source: Abridged from *Thermodynamic Properties of Steam*, by Joseph H. Keenan and Fredrick G. Keyes. © 1936, by Joseph H. Keenan and Frederick G. Keyes. Published by John Wiley & Sons, Inc., New York.

[a]PSIA = 0.069 bar (abs); ft^3/lbm = 62.4 l/kg; Btu/lbm = 0.556 kcal/kg

© 2003 by Béla Lipták

TABLE A.5b
Properties of Superheated Steam

Abs. Press., PSIA[a] *(Sat. Temp. °F)*	*Temperature, °F/°C*												
	200/93	*220/104*	*300/149*	*350/177*	*400/204*	*450/232*	*500/260*	*550/288*	*600/316*	*700/371*	*800/427*	*900/482*	*1000/538*
v	392.6	404.5	452.3	482.2	512.0	541.8	571.6	601.4	631.2	690.8	750.4	809.9	869.5
1 *h*	1150.4	1159.5	1195.8	1218.7	1241.7	1264.9	1288.3	1312.0	1335.7	1383.8	1432.8	1482.7	1533.5
(101.74) *s*	2.0512	2.0647	2.1153	2.1444	2.1720	2.1983	2.2233	2.2468	2.2702	2.3137	2.3542	2.3923	2.4283
v	78.16	80.59	90.25	96.26	102.26	108.24	114.22	120.19	126.16	138.10	150.03	161.95	173.87
5 *h*	1148.8	1158.1	1195.0	1218.1	1241.2	1264.5	1288.0	1311.7	1335.4	1383.6	1432.7	1482.6	1533.4
(162.24) *s*	1.8718	1.8857	1.9370	1.9664	1.9942	2.0205	2.0456	2.0692	2.0927	2.1361	2.1767	2.2148	2.2509
v	38.85	40.09	45.00	48.03	51.04	54.05	57.05	60.04	63.03	69.01	74.98	80.95	86.92
10 *h*	1146.6	1156.2	1193.9	1217.2	1240.6	1264.0	1287.5	1311.3	1335.1	1383.4	1432.5	1482.4	1533.1
(193.21) *s*	1.7927	1.8071	1.8595	1.8892	1.9172	1.9436	1.9689	1.9924	2.0160	2.0596	2.1002	2.1383	2.1744
v		27.15	30.53	32.62	34.68	36.73	38.78	40.82	42.86	46.94	51.00	55.07	59.13
14.696 *h*		1154.4	1192.8	1216.4	1239.9	1263.5	1287.1	1310.9	1335.8	1383.2	1432.3	1482.3	1533.1
(212.00) *s*		1.7624	1.8160	1.8460	1.8743	1.9008	1.9261	1.9498	1.9734	2.0170	2.0576	2.0958	2.1319
v			22.36	23.91	25.43	26.95	28.46	29.97	31.47	34.47	37.46	40.45	43.44
20 *h*			1191.6	1215.6	1239.2	1262.9	1286.6	1310.5	1334.4	1382.9	1432.1	1482.1	1533.0
(227.96) *s*			1.7808	1.8112	1.8396	1.8664	1.8918	1.9160	1.9392	1.9829	2.0235	2.0618	2.0978
v			11.040	11.843	12.628	13.401	14.168	14.93	15.688	17.198	18.702	20.20	21.70
40 *h*			1186.8	1211.9	1236.5	1260.7	1284.8	1308.9	1333.1	1381.9	1431.3	1481.4	1532.4
(267.25) *s*			1.6994	1.7314	1.7608	1.7881	1.8140	1.8384	1.8619	1.9058	1.9467	1.9850	2.0214
v			7.259	7.818	8.357	8.884	9.403	9.916	10.427	11.441	12.449	13.452	14.454
60 *h*			1181.6	1208.2	1233.6	1258.5	1283.0	1307.4	1331.8	1380.9	1430.5	1480.8	1531.9
(292.71) *s*			1.6492	1.6830	1.7135	1.7416	1.7678	1.7926	1.8162	1.8605	1.9015	1.9400	1.9762
v				5.803	6.220	6.624	7.020	7.410	7.797	8.562	9.322	10.077	10.830
80 *h*				1204.3	1230.7	1256.1	1281.1	1305.8	1330.5	1379.9	1429.7	1480.1	1531.3
(312.03) *s*				1.6475	1.6791	1.7078	1.7346	1.7598	1.7836	1.8281	1.8694	1.9079	1.9442
v				4.592	4.937	5.268	5.589	5.905	6.218	6.835	7.446	8.052	8.656
100 *h*				1200.1	1227.6	1253.7	1279.1	1304.2	1329.1	1378.9	1428.9	1479.5	1530.8
(327.81) *s*				1.6188	1.6518	1.6813	1.7085	1.7339	1.7581	1.8029	1.8443	1.8829	1.9193
v				3.783	4.081	4.363	4.636	4.902	5.165	5.683	6.195	6.702	7.207
120 *h*				1195.7	1224.4	1251.3	1277.2	1302.5	1327.7	1377.8	1428.1	1478.8	1530.2
(341.25) *s*				1.5944	1.6287	1.6591	1.6869	1.7127	1.7370	1.7822	1.8237	1.8625	1.8990
v					3.468	3.715	3.954	4.186	4.413	4.861	5.301	5.738	6.172
140 *h*					1221.1	1248.7	1275.2	1300.9	1326.4	1376.8	1427.3	1478.2	1529.7
(353.02) *s*					1.6087	1.6399	1.6683	1.6945	1.7190	1.7645	1.8063	1.8451	1.8817

© 2003 by Béla Lipták

TABLE A.5b Continued
Properties of Superheated Steam

Abs. Press., PSIA[a] (Sat. Temp. °F)	*Temperature, °F/°C*												
	200/93	*220/104*	*300/149*	*350/177*	*400/204*	*450/232*	*500/260*	*550/288*	*600/316*	*700/371*	*800/427*	*900/482*	*1000/538*
					3.008	3.230	3.443	3.648	3.849	4.244	4.631	5.015	5.396
160					1217.6	1246.1	1273.1	1299.3	1325.0	1375.7	1426.4	1477.5	1529.1
(363.53)					1.5908	1.6230	1.6519	1.6785	1.7033	1.7491	1.7911	1.8301	1.8667
					2.649	2.852	3.044	3.229	3.411	3.764	4.110	4.452	4.792
180					1214.0	1243 5	1271.0	1297.6	1323.5	1374.7	1425.6	1476.8	1528.6
(373.06)					1.5745	1.6077	1.6373	1.6642	1.6894	1.7355	1.7776	1.8167	1.8534
					2.361	2.549	2.726	2.895	3.060	3.380	3.693	4.002	4.309
200					1210.3	1240.7	1268.9	1295.8	1322.1	1373.6	1424.8	1476.2	1528.0
(381.79)					1.5594	1.5937	1.6240	1.6513	1.6767	1.7232	1.7655	1.8048	1.8415
					2.125	2.301	2.465	2.621	2.772	3.066	3.352	3.634	3.913
220					1206.5	1237.9	1266.7	1294.1	1320.7	1372.6	1424.0	1475.5	1527.5
(389.86)					1.5453	1.5808	1.6117	1.6395	1.6652	1.7120	1.7545	1.7939	1.8308
					1.9276	2.094	2.247	2.393	2.533	2.804	3.068	3.327	3.584
240					1202.5	1234.9	1264.5	1292.4	1319.2	1371.5	1423.2	1474.8	1526.9
(397.37)					1.5319	1.5686	1.6003	1.6286	1.6546	1.7017	1.7444	1.7839	1.8209
						1.9183	2.063	2.199	2.330	2.582	2.827	3.067	3.305
260						1232.0	1262.3	1290.5	1317.7	1370.4	1422.3	1474.2	1526.3
(404.42)						1.5573	1.5897	1.6184	1.6447	1.6922	1.7352	1.7748	1.8118
						1.7674	1.9047	2.033	2.156	2.392	2.621	2.845	3.066
280						1228.9	1260.0	1288.7	1316.2	1369.4	1421.5	1473.5	1525.8
(411.05)						1.5464	1.5796	1.6087	1.6354	1.6834	1.7265	1.7662	1.8033
						1.6364	1.7675	1.8891	2.005	2.227	2.442	2.652	2.859
300						1225.8	1257.6	1286.8	1314.7	1368.3	1420.6	1427.8	1525.2
(417.33)						1.5360	1.5701	1.5998	1.6268	1.6751	1.7184	1.7582	1.7954
						1.3734	1.4923	1.6010	1.7036	1.8980	2.084	2.266	2.445
350						1217.7	1251.5	1282.1	1310.9	1365.5	1418.5	1471.1	1523.8
(431.72)						1.5119	1.5481	1.5792	1.6070	1.6563	1.7002	1.7403	1.7777
						1.1744	1.2851	1.3843	1.4770	1.6508	1.8161	1.9767	2.134
400						1208.8	1245.1	1277.2	1306.9	1362.7	1416.4	1.469.4	1522.4
(444.59)						1.4892	1.5281	1.5607	1.5894	1.6398	1.6842	1.7247	1.7623

© 2003 by Béla Lipták

TABLE A.5b Continued

Properties of Superheated Steam

Abs. Press., PSIA[a] *(Sat. Temp. °F)*	*Temperature, °F/°C*													
	500/260	*550/288*	*600/316*	*620/327*	*640/338*	*660/349*	*680/360*	*700/371*	*800/427*	*900/482*	*1000/538*	*1200/649*	*1400/760*	*1600/871*
v	1.1231	1.2155	1.3005	1.3332	1.3652	1.3967	1.4278	1.4584	1.6074	1.7516	1.8928	2.170	2.443	2.714
450 *h*	1238.4	1272.0	1302.8	1314.6	1326.2	1337.5	1348.8	1359.9	1414.3	1467.7	1521.0	1628.6	1738.7	1851.9
(456.28) *s*	1.5095	1.5437	1.5735	1.5845	1.5951	1.6054	1.6153	1.6250	1.6699	1.7108	1.7486	1.8177	1.8803	1.9381
v	0.9927	1.0800	1.1591	1.1893	1.2188	1.2478	1.2763	1.3044	1.4405	1.5715	1.6996	1.9504	2.197	2.442
500 *h*	1231.3	1266.8	1298.6	1310.7	1322.6	1334.2	1345.7	1357.0	1412.1	1466.0	1519.6	1627.6	1737.9	1851.3
(467.01) *s*	1.4919	1.5280	1.5588	1.5701	1.5810	1.5915	1.6016	1.6115	1.6571	1.6982	1.7363	1.8056	1.8683	1.9262
v	0.8852	0.9686	1.0431	1.0714	1.0989	1.1259	1.1523	1.1783	1.3038	1.4241	1.5414	1.7706	1.9957	2.219
550 *h*	1223.7	1261.2	1294.3	1306.8	1318.9	1330.8	1342.5	1354.0	1409.9	1464.3	1518.2	1626.6	1737.1	1850.6
(476.94) *s*	1.4751	1.5131	1.5451	1.5568	1.5680	1.5787	1.5890	1.5991	1.6452	1.6868	1.7250	1.7946	1.8575	1.9155
v	0.7947	0.8753	0.9463	0.9729	0.9988	1.0241	1.0489	1.0732	1.1899	1.3013	1.4096	1.6208	1.8279	2.033
600 *h*	1215.7	1255.5	1289.9	1302.7	1315.2	1327.4	1339.3	1351.1	1407.7	1462.5	1516.7	1625.5	1736.3	1850.0
(486.21) *s*	1.4586	1.4990	1.5323	1.5443	1.5558	1.5667	1.5773	1.5875	1.6343	1.6762	1.7147	1.7846	1.8476	1.9056
v		0.7277	0.7934	0.8177	0.8411	0.8639	0.8860	0.9077	1.0108	1.1082	1.2024	1.3853	1.5641	1.7405
700 *h*		1243.2	1280.6	1294.3	1307.5	1320.3	1332.8	1345.0	1403.2	1459.0	1513.9	1623.5	1734.8	1848.8
(503.10) *s*		1.4722	1.5084	1.5212	1.5333	1.5449	1.5559	1.5665	1.6147	1.6573	1.6963	1.7666	1.8299	1.8881
v		0.6154	0.6779	0.7006	0.7223	0.7433	0.7635	0.7833	0.8763	0.9633	1.0470	1.2088	1.3662	1.5214
800 *h*		1229.8	1270.7	1285.4	1299.4	1312.9	1325.9	1338.6	1398.6	1455.4	1511.0	1621.4	1733.2	1847.5
(518.23) *s*		1.4467	1.4863	1.5000	1.5129	1.5250	1.5366	1.5476	1.5972	1.6407	1.6801	1.7510	1.8146	1.8729
v		0.5264	0.5873	0.6089	0.6294	0.6491	0.6680	0.6863	0.7716	0.8506	0.9262	1.0714	1.2124	1.3509
900 *h*		1215.0	1260.1	1275.9	1290.9	1305.1	1318.8	1332.1	1393.9	1451.8	1508.1	1619.3	1731.6	1846.3
(531.98) *s*		1.4216	1.4653	1.4800	1.4938	1.5066	1.5187	1.5303	1.5814	1.6257	1.6656	1.7371	1.8009	1.8595
v		0.4533	0.5140	0.5350	0.5546	0.5733	0.5912	0.6084	0.6878	0.7604	0.8294	0.9615	1.0893	1.2146
1000 *h*		1198.3	1248.8	1265.9	1281.9	1297.0	1311.4	1325.3	1389.2	1448.2	1505.1	1617.3	1730.0	1845.0
(544.61) *s*		1.3961	1.4450	1.4610	1.4757	1.4893	1.5021	1.5141	1.5670	1.6121	1.6525	1.7245	1.7886	1.8474
v			0.4532	0.4738	0.4929	0.5110	0.5281	0.5445	0.6191	0.6866	0.7503	0.8716	0.9885	1.1031
1100 *h*			1236.7	1255.3	1272.4	1288.5	1303.7	1318.3	1384.3	1444.5	1502.2	1615.2	1728.4	1843.8
(556.31) *s*			1.4251	1.4425	1.4583	1.4728	1.4862	1.4989	1.5535	1.5995	1.6405	1.7130	1.7775	1.8363
v			0.4016	0.4222	0.4410	0.4586	0.4752	0.4909	0.5617	0.6250	0.6843	0.7967	0.9046	1.0101
1200 *h*			1223.5	1243.9	1262.4	1279.6	1295.7	1311.0	1379.3	1440.7	1499.2	1613.1	1726.9	1842.5
(567.22) *s*			1.4052	1.4243	1.4413	1.4568	1.4710	1.4843	1.5409	1.5879	1.6293	1.7025	1.7672	1.8263
v			0.3174	0.3390	0.3580	0.3753	0.3912	0.4062	0.4714	0.5281	0.5805	0.6789	0.7727	0.8640
1400 *h*			1193.0	1218.4	1240.4	1260.3	1278.5	1295.5	1369.1	1433.1	1493.2	1608.9	1723.7	1840.0
(587.10) *s*			1.3639	1.3877	1.4079	1.4258	1.4419	1.4567	1.5177	1.5666	1.6093	1.6836	1.7489	1.8083

© 2003 by Béla Lipták

TABLE A.5b Continued
Properties of Superheated Steam

Abs. Press., PSIA[a] (Sat. Temp. °F)	Temperature, °F/°C												
	500/260	550/288	600/316	620/327	640/338	660/349	680/360	700/371	800/427	900/482	1000/538	1200/649	1400/760	1600/871
v				0.2733	0.2936	0.3112	0.3271	0.3417	0.4034	0.4553	0.5027	0.5906	0.6738	0.7545
1600 h				1187.8	1215.2	1238.7	1259.6	1278.7	1358.4	1425.3	1487.0	1604.6	1720.5	1837.5
(604.90) s				1.3489	1.3741	1.3952	1.4137	1.4303	1.4964	1.5476	1.5914	1.6669	1.7328	1.7926
v					0.2407	0.2597	0.2760	0.2907	0.3502	0.3986	0.4421	0.5218	0.5968	0.6693
1800 h					1185.1	1214.0	1238.5	1260.3	1347.2	1417.4	1480.8	1600.4	1717.3	1835.0
(621.03) s					1.3377	1.3638	1.3855	1.4044	1.4765	1.5301	1.5752	1.6520	1.7185	1.7786
v					0.1936	0.2161	0.2337	0.2489	0.3074	0.3532	0.3935	0.4668	0.5352	0.6011
2000 h					1145.6	1184.9	1214.8	1240.0	1335.5	1409.2	1474.5	1596.1	1714.1	1832.5
(635.82) s					1.2945	1.3300	1.3564	1.3783	1.4576	1.5139	1.5603	1.6384	1.7055	1.7660
v							0.1484	0.1686	0.2294	0.2710	0.3061	0.3678	0.4244	0.4784
2500 h							1132.3	1176.8	1303.6	1387.8	1458.4	1585.3	1706.1	1826.2
(668.13) s							1.2687	1.3073	1.4127	1.4772	1.5273	1.6088	1.6775	1.7389
v								0.0984	0.1760	0.2159	0.2476	0.3018	0.3505	0.3966
3000 h								1060.7	1267.2	1365.0	1441.8	1574.3	1698.0	1819.9
(695.36) s								1.1966	1.3690	1.4439	1.4984	1.5837	1.6540	1.7163
v									0.1583	0.1981	0.2288	0.2806	0.3267	0.3703
3206.2 h									1250.5	1355.2	1434.7	1569.8	1694.6	1817.2
(705.40) s									1.3508	1.4309	1.4874	1.5742	1.6452	1.7080
v								0.0306	0.1364	0.1762	0.2058	0.2546	0.2977	0.3381
3500 h								780.5	1224.9	1340.7	1424.5	1563.3	1689.8	1813.6
S								0.9515	1.3241	1.4127	1.4723	1.5615	1.6336	1.6968
v								0.0287	0.1052	0.1462	0.1743	0.2192	0.2581	0.2943
4000 h								763.8	1174.8	1314.4	1406.8	1552.1	1681.7	1807.2
S								0.9347	1.2757	1.3827	1.4482	1.5417	1.6154	1.6795
v								0.0276	0.0798	0.1226	0.1500	0.1917	0.2273	0.2602
4500 h								753.5	1113.9	1286.5	1388.4	1540.8	1673.5	1800.9
S								0.9235	1.2204	1.3529	1.4253	1.5235	1.5990	1.6640
v								0.0268	0.0593	0.1036	0.1303	0.1696	0.2027	0.2329
5000 h								746.4	1047.1	1256.5	1369.5	1529.5	1665.3	1794.5
S								0.9152	1.1622	1.3231	1.4034	1.5066	1.5839	1.6499
v								0.0262	0.0463	0.0880	0.1143	0.1516	0.1825	0.2106
5500 h								741.3	985.0	1224.1	1349.3	1518.2	1657.0	1788.1
S								0.9090	1.1093	1.2930	1.3821	1.4908	1.5699	1.6369

Source: Abridged from *Thermodynamic Properties of Steam*, by Joseph H. Keenan and Frederick G. Keyes. © 1936, by Joseph Keenan and Frederick G. Keyes. Published by John Wiley & Sons, Inc., New York.

[a]For SI units see Section A.1.

© 2003 by Béla Lipták

TABLE A.5c

Properties of Water at Various Temperatures from 40 to 540°F (4.4 to 282.2°C)

Temp., °F	*Temp., °C*	*Specific Volume*[a] *ft*^{3}*/lb*	*Specific Gravity*	*Weight*[a] *(lb/ft*^{3}*)*	*Vapor Pressure*[a] *PSIA*
40	4.4	0.01602	1.0013	62.42	0.1217
50	10.0	0.01603	1.0006	62.38	0.1781
60	15.6	0.01604	1.0000	62.34	0.2563
70	21.1	0.01606	0.9987	62.27	0.3631
80	26.7	0.01608	0.9975	62.19	0.5069
90	32.2	0.01610	0.9963	62.11	0.6982
100	37.8	0.01613	0.9944	62.00	0.9492
120	48.9	0.01620	0.9901	61.73	1.692
140	60.0	0.01629	0.9846	61.39	2.889
160	71.1	0.01639	0.9786	61.01	4.741
180	82.2	0.01651	0.9715	60.57	7.510
200	93.3	0.01663	0.9645	60.13	11.526
212	100.0	0.01672	0.9593	59.81	14.696
220	104.4	0.01677	0.9565	59.63	17.186
240	115.6	0.01692	0.9480	59.10	24.97
260	126.7	0.01709	0.9386	58.51	35.43
280	137.8	0.01726	0.9293	58.00	49.20
300	148.9	0.01745	0.9192	57.31	67.01
320	160.0	0.01765	0.9088	56.66	89.66
340	171.1	0.01787	0.8976	55.96	118.01
360	182.2	0.01811	0.8857	55.22	153.04
380	193.3	0.01836	0.8736	54.47	195.77
400	204.4	0.01864	0.8605	53.65	247.31
420	215.6	0.01894	0.8469	52.80	308.83
440	226.7	0.01926	0.8328	51.92	381.59
460	237.8	0.0196	0.8183	51.02	466.9
480	248.9	0.0200	0.8020	50.00	566.1
500	260.0	0.0204	0.7863	49.02	680.8
520	271.1	0.0209	0.7674	47.85	812.4
540	282.2	0.0215	0.7460	46.51	962.5

[a] ft^3/lb = 62.4 l/kg; lb/ft^3 = 0.016 kg/l; PSIA = 0.069 bar (abs.).

Computed from Keenan & Keyes Steam Table.

© 2003 by Béla Lipták

A.6 Friction Loss in Pipes

Friction loss moduli for laminar flow are shown by the 45° lines in the upper left-hand portion of each chart. Moduli for turbulent flow are shown by the steeper curves in the lower right-hand portion. Both of these regions represent stable states of flow. A diagonal line separates the regions of laminar and turbulent flow and represents the critical zone, a region in which it is difficult to predict the state of flow and, hence, the friction loss. The critical zone usually represents a region of unstable flow. The critical zone line gives approximate moduli on the high side for this region of unstable flow.

The bottom scale of each chart represents flow in gallons per minute, GPM. An auxiliary top scale shows the average velocity in the pipe in feet per second. Read vertically from the GPM scale to find the corresponding velocity in feet per second. The vertical scales, labeled "Friction Loss Modulus for 100 Feet of Pipe," represent values of the ratio:

$$M = \frac{\Delta p}{SG}$$

where

M = friction loss modulus for 100 ft (30 m) of pipe
Δp = pressure loss in lb/in.^{2} per 100 feet of pipe
SG = specific gravity of fluid at 60°F (15.6°C)

The loss due to pipe friction may be obtained as follows:

$$\Delta p = M \times SG$$

To use the charts, proceed as follows:

1. Select the chart for the size of pipe in question.
2. Follow the vertical line representing the flow in GPM to its intersection with the desired viscosity curve, and read the modulus at the left.
3. If the vertical line representing the flow in GPM does not intersect the viscosity line in either turbulent or laminar flow, use the intersection with the critical zone line.
4. Compute the friction loss in pressure drop from the equation above.

© 2003 by Béla Lipták

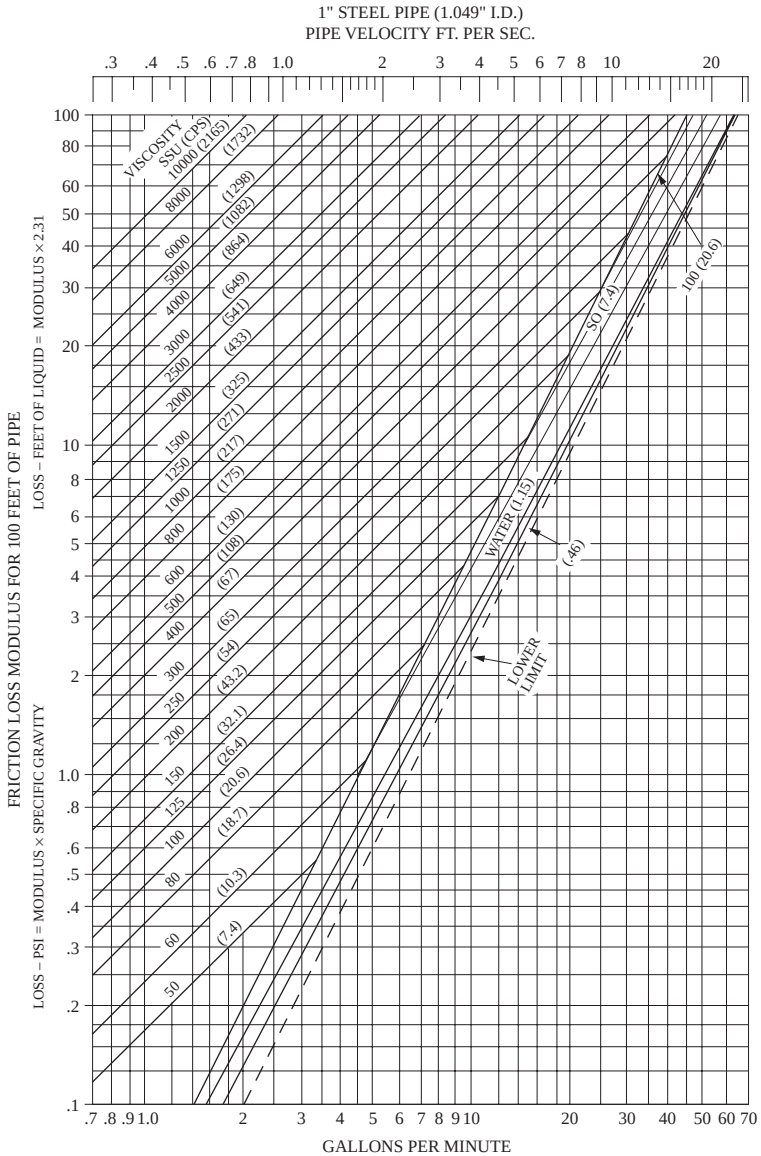

Loss – lbs per sq in. = modulus × Specific Gravity
Loss – Feet of liquid = modulus × 2.31

*For SI units see Section A.1.

FIG. A.6a

*Friction loss modulus for 100 ft of 1 in. steel pipe.**

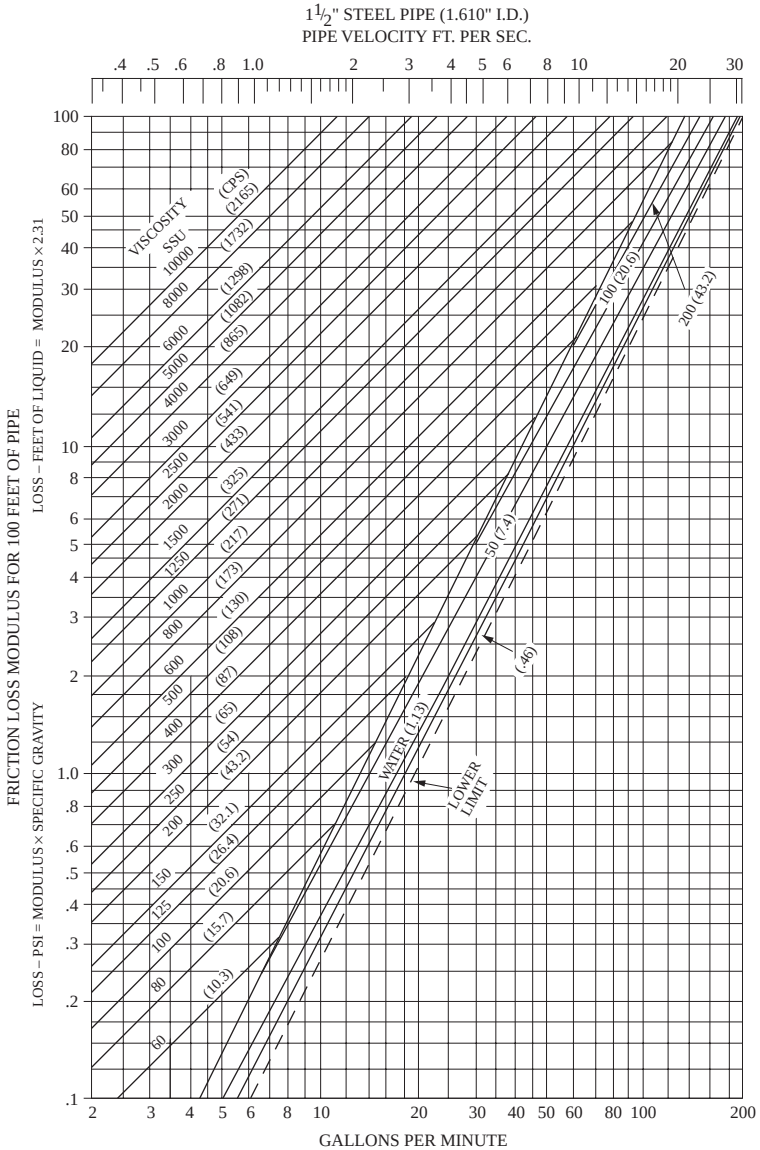

Loss – lbs per sq in. = modulus × Specific Gravity
Loss – Feet of liquid = modulus × 2.31

*For SI units see Section A.1.

FIG. A.6b

*Friction loss modulus for 100 ft of 1.5 in. steel pipe.**

© 2003 by Béla Lipták

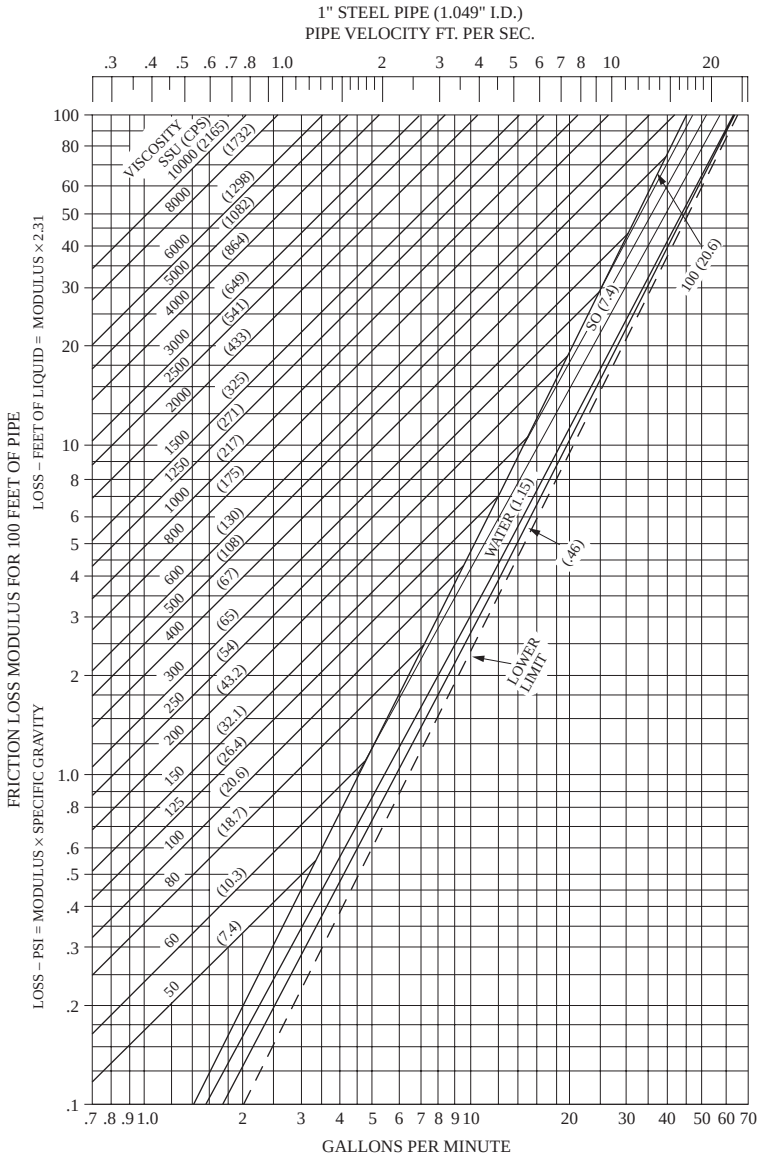

Loss – lbs per sq in. = modulus × Specific Gravity
Loss – Feet of liquid = modulus × 2.31

*For SI units see Section A.1.

FIG. A.6c
*Friction loss modulus for 100 ft of 2 in. steel pipe.**

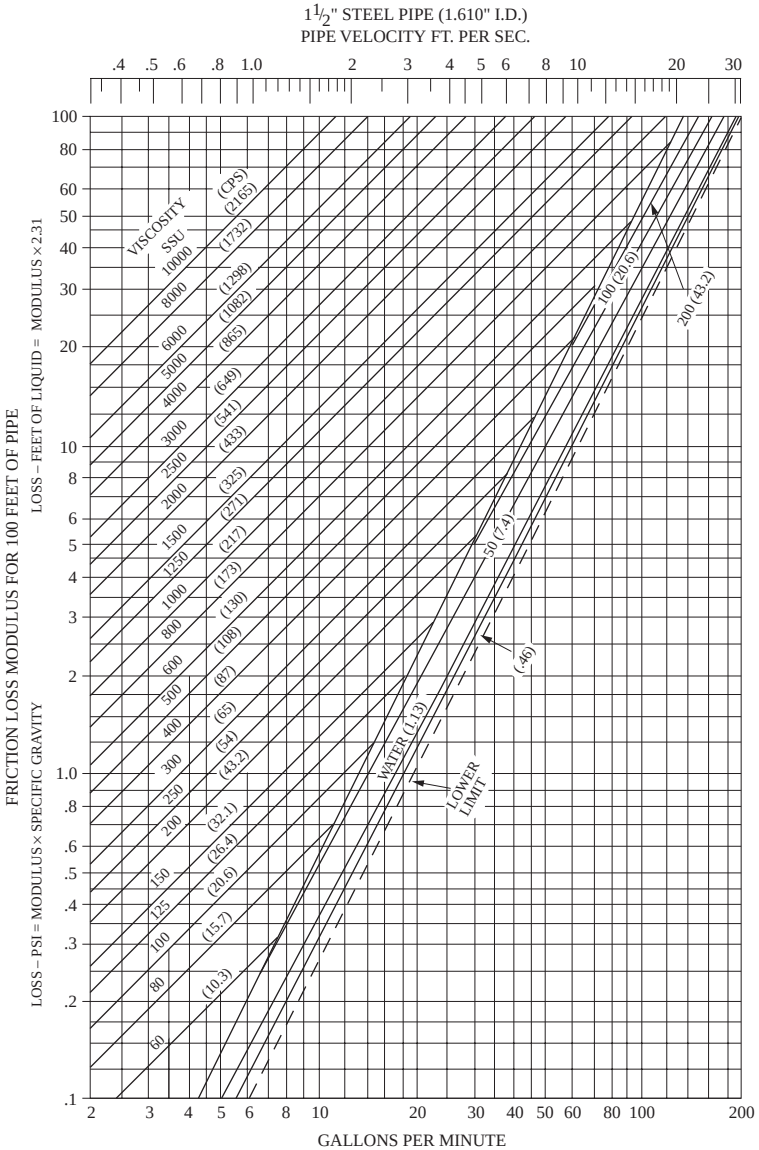

Loss – lbs per sq in. = modulus × Specific Gravity
Loss – Feet of liquid = modulus × 2.31

*For SI units see Section A.1.

FIG. A.6d
*Friction loss modulus for 100 ft of 3 in. steel pipe.**

© 2003 by Béla Lipták

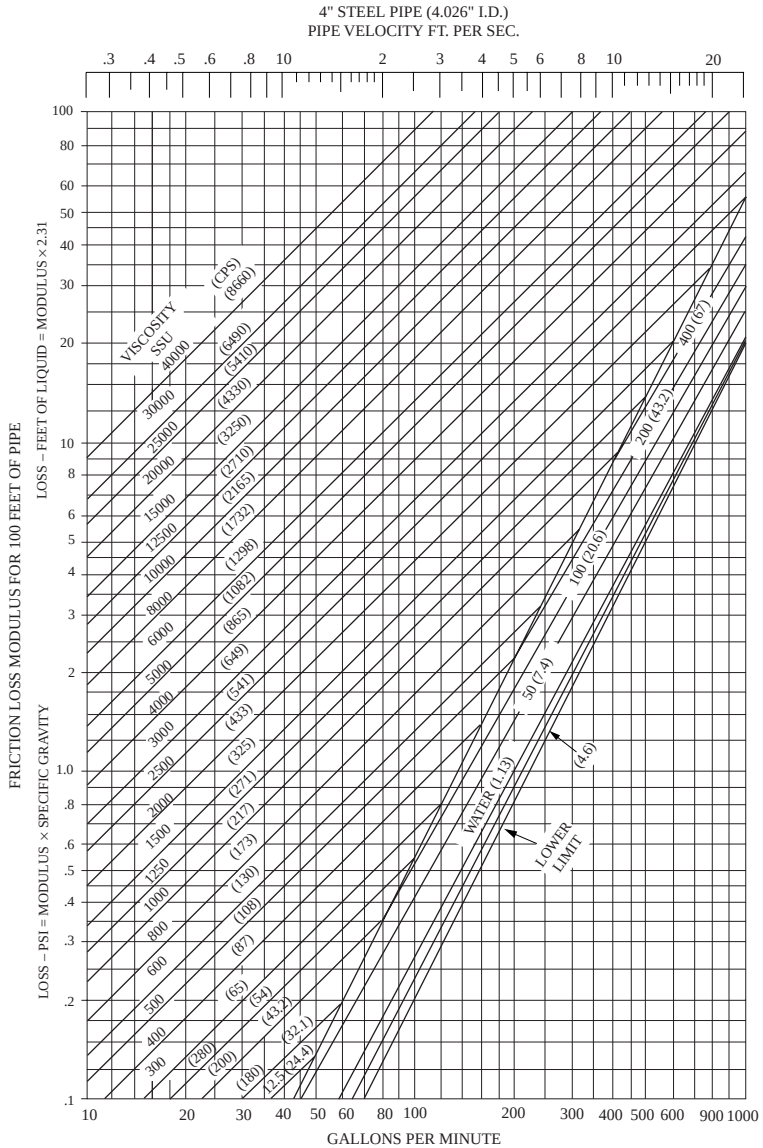

Loss – lbs per sq in. = modulus × Specific Gravity
Loss – Feet of liquid = modulus × 2.31

FIG. A.6e

*Friction loss modulus for 100 ft of 4 in. steel pipe.**

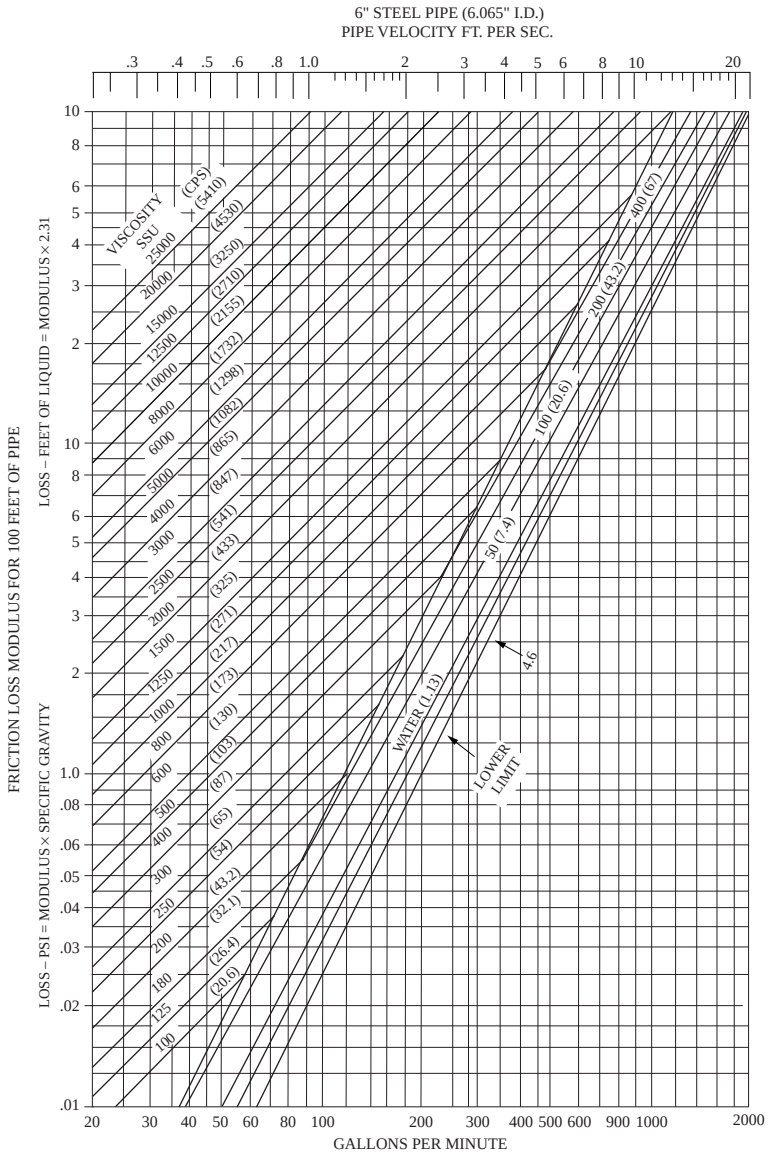

Loss – lbs per sq in. = modulus × Specific Gravity
Loss – Feet of liquid = modulus × 2.31

FIG. A.6f

*Friction loss modulus for 100 ft of 6 in. steel pipe.**

© 2003 by Béla Lipták

A.7 Tank Volumes

TABLE A.7a

Capacity of Round Tanks[a] (per foot of depth)

Dia.	*gal*	*Area sq ft*	*Dia.*	*gal*	*Area sq ft*	*Dia.*	*gal*	*Area sq ft*	*Dia.*	*gal*	*Area sq ft*
1′	5.87	.785	4′	94.00	12.566	11′	710.90	95.03	22′	2843.60	380.13
1′1″	6.89	.922	4′1″	97.96	13.095	11′3″	743.58	99.40	22′3″	2908.60	388.82
1′2″	8.00	1.069	4′2″	102.00	13.635	11′6″	776.99	103.87	22′6″	2974.30	397.61
1′3″	9.18	1.227	4′3″	106.12	14.186	11′9″	811.14	108.43	22′9″	3040.80	406.49
1′4″	10.44	1.396	4′4″	110.32	14.748	12′	846.03	113.10	23′	3108.00	415.48
1′5″	11.79	1.576	4′5″	114.61	15.321	12′3″	881.65	117.86	23′3″	3175.90	424.56
1′6″	13.22	1.767	4′6″	118.97	15.90	12′6″	918.00	122.72	23′6″	3244.60	433.74
1′7″	14.73	1.969	4′7″	123.42	16.50	12′9″	955.09	127.68	23′9″	3314.00	443.01
1′8″	16.32	2.182	4′8″	127.95	17.10	13′	992.91	132.73	24′	3384.10	452.39
1′9″	17.99	2.405	4′9″	132.56	17.72	13′3″	1031.50	137.89	24′3″	3455.00	461.86
1′10″	19.75	2.640	4′10″	137.25	18.35	13′6″	1070.80	142.14	24′6″	3526.60	471.44
1′11″	21.58	2.885	4′11″	142.02	18.99	13′9″	1110.80	148.49	24′9″	3598.90	481.11
2′	23.50	3.142	5′	146.76	19.62	14′	1151.50	153.94	25′	3672.00	490.87
2′1″	25.50	3.409	5′3″	161.86	21.64	14′3″	1193.00	159.48	25′3″	3745.80	500.74
2′2″	27.58	3.687	5′6″	177.66	23.75	14′6″	1235.30	165.13	25′6″	3820.30	510.71
2′3″	29.74	3.976	5′9″	194.27	25.97	14′9″	1278.20	170.87	25′9″	3895.60	520.77
2′4″	31.99	4.276	6′	211.51	28.27	15′	1321.90	176.71	26′	3971.60	530.93
2′5″	34.31	4.587	6′3″	229.50	30.68	15′3″	1366.40	182.65	26′3″	4048.40	541.19
2′6″	36.72	4.909	6′6″	248.23	35.18	15′6″	1411.50	188.69	26′6″	4125.90	551.55
2′7″	39.21	5.241	6′9″	267.69	35.78	15′9″	1457.40	194.83	26′9″	4204.10	562.00
2′8″	41.78	5.585	7′	287.88	38.48	16′	1504.10	201.06	27′	4283.00	572.66
2′9″	44.43	5.940	7′3″	308.81	41.28	16′3″	1551.40	207.39	27′3″	4362.70	583.21
2′10″	47.16	6.305	7′6″	330.48	44.18	16′6″	1599.50	213.82	27′6″	4443.10	593.96
2′11″	49.98	6.681	7′9″	352.88	47.17	16′9″	1648.40	220.35	27′9″	4524.30	604.81
3′	52.88	7.069	8′	376.01	50.27	17′	1697.21	226.87	28′	4606.20	615.75
3′1″	55.86	7.467	8′3″	399.80	53.46	17′6″	1798.51	240.41	28′3″	4688.80	626.80
3′2″	58.92	7.876	8′6″	424.48	56.75	18′	1902.72	254.34	28′6″	4772.10	637.94
3′3″	62.06	8.296	8′9″	449.82	60.13	18′6″	2009.92	268.67	28′9″	4856.20	649.18
3′4″	65.28	8.727	9′	475.89	63.62	19′	2120.90	283.53	29′	4941.00	660.52
3′5″	68.58	9.168	9′3″	502.70	67.20	19′6″	2234.00	298.65	29′3″	5026.60	671.96
3′6″	71.97	9.621	9′6″	530.24	70.88	20′	2350.10	314.16	29′6″	5112.90	683.49
3′7″	75.44	10.085	9′9″	558.51	74.66	20′6″	2469.10	330.06	29′9″	5199.90	695.13
3′8″	78.99	10.559	10′	587.52	78.54	21′	2591.00	346.36	30′	5287.70	706.86

© 2003 by Béla Lipták

TABLE A.7a Continued
Capacity of Round Tanks[a] (per foot of depth)

Dia.	gal	Area sq ft	Dia.	gal	Area sq ft	Dia.	gal	Area sq ft	Dia.	gal	Area sq ft
3′9″	82.62	11.045	10′3″	617.26	82.52	21′3″	2653.00	354.66	30′3″	5376.20	718.69
3′10″	86.33	11.541	10′6″	640.74	86.59	21′6″	2715.80	363.05	30′6″	5465.40	730.62
3′11″	90.13	12.048	10′9″	678.95	90.76	21′9″	2779.30	371.54	30′9″	5555.40	742.64

To find the capacity of tanks greater than shown above, find a tank of one-half the size desired, and multiply its capacity by four, or find one one-third the size desired, and multiply its capacity by 9.

[a]foot = 0.3048 m; gal = 3.785 l; sq ft = 0.0929 m^2; inch = 25.4 mm

TABLE A.7b
Capacity of Partially Filled Horizontal Tanks[a]

Dia. (in feet)	Gallons per ft of Length When Tank Is Filled								
	1/10	1/5	3/10	2/5	1/2	3/5	7/10	4/5	9/10
1	.3	.8	1.4	2.1	2.9	3.6	4.3	4.9	5.5
2	1.2	3.3	5.9	8.8	11.7	14.7	17.5	20.6	22.2
3	2.7	7.5	13.6	19.8	26.4	33.0	39.4	45.2	50.1
4	4.9	13.4	23.8	35.0	47.0	59.0	70.2	80.5	89.0
5	7.6	20.0	37.0	55.0	73.0	92.0	110.0	126.0	139.0
6	11.0	30.0	53.0	78.0	106.0	133.0	158.0	182.0	201.0
7	15.0	41.0	73.0	107.0	144.0	181.0	215.0	247.0	272.0
8	19.0	52.0	96.0	140.0	188.0	235.0	281.0	322.0	356.0
9	25.0	67.0	112.0	178.0	238.0	298.0	352.0	408.0	450.0
10	30.0	83.0	149.0	219.0	294.0	368.0	440.0	504.0	556.0
11	37.0	101.0	179.0	265.0	356.0	445.0	531.0	610.0	672.0
12	44.0	120.0	214.0	315.0	423.0	530.0	632.0	741.0	800.0
13	51.0	141.0	250.0	370.0	496.0	621.0	740.0	850.0	940.0
14	60.0	164.0	291.0	430.0	576.0	722.0	862.0	989.0	1084.0
15	68.0	188.0	334.0	494.0	661.0	829.0	988.0	1134.0	1253.0

[a]foot = 0.3048 m; gallon = 3.785 l.

© 2003 by Béla Lipták

TABLE A.7c

Capacities of Various Cylinders in U.S. Gallons[a]

Dia. (Inches)	Length of Cylinder																		
	1″	1′	5′	6′	7′	8′	9′	10′	11′	12′	13′	14′	15′	16′	17′	18′	20′	22′	24′
1		0.04	0.20	0.24	0.28	0.32	0.36	0.40	0.44	0.48	0.52	0.56	0.60	0.64	0.68	0.72	0.80	0.88	0.96
2	0.01	0.16	0.80	0.96	1.12	1.28	1.44	1.60	1.76	1.92	2.08	2.24	2.40	2.56	2.72	2.88	3.20	3.52	3.84
3	0.03	0.37	1.84	2.20	2.56	2.92	3.30	3.68	4.04	4.40	4.76	5.12	5.48	5.84	6.22	6.60	7.36	8.08	8.80
4	0.05	0.65	3.26	3.92	4.58	5.24	5.88	6.52	7.18	7.84	8.50	9.16	9.82	10.5	11.1	11.8	13.0	14.4	15.7
5	0.08	1.02	5.10	6.12	7.14	8.16	9.18	10.2	11.2	12.2	13.3	14.3	15.3	16.3	17.3	18.4	20.4	22.4	24.4
6	0.12	1.47	7.34	8.80	10.3	11.8	13.2	14.7	16.1	17.6	19.1	20.6	22.0	23.6	25.0	26.4	29.4	32.2	35.2
7	0.17	2.00	10.0	12.0	14.0	16.0	18.0	20.0	22.0	24.0	26.0	28.0	30.0	32.0	34.0	36.0	40.0	44.0	48.0
8	0.22	2.61	13.0	15.6	18.2	20.8	23.4	26.0	28.6	31.2	33.8	36.4	39.0	41.6	44.2	46.8	52.0	57.2	62.4
9	0.28	3.31	16.5	19.8	23.1	26.4	29.8	33.0	36.4	39.6	43.0	46.2	49.6	52.8	56.2	60.0	66.0	72.4	79.2
10	0.34	4.08	20.4	24.4	28.4	32.6	36.8	40.8	44.8	48.8	52.8	56.8	61.0	65.2	69.4	73.6	81.6	89.6	97.6
11	0.41	4.94	24.6	29.6	34.6	39.4	44.4	49.2	54.2	59.2	64.2	69.2	74.0	78.8	83.8	88.8	98.4	104.	118.
12	0.49	5.88	29.4	35.2	41.0	46.8	52.8	58.8	64.6	70.4	76.2	82.0	87.8	93.6	99.6	106.	118.	129.	141.
13	0.57	6.90	34.6	41.6	48.6	55.2	62.2	69.2	76.2	83.2	90.2	97.2	104.	110.	117.	124.	138.	152.	166.
14	0.67	8.00	40.0	48.0	56.0	64.0	72.0	80.0	88.0	96.0	104.	112.	120.	128.	136.	144.	160.	176.	192.
15	0.77	9.18	46.0	55.2	64.4	73.6	82.8	92.0	101.	110.	120.	129.	138.	147.	156.	166.	184.	202.	220.
16	0.87	10.4	52.0	62.4	72.8	83.2	93.6	104.	114.	125.	135.	146.	156.	166.	177.	187.	208.	229.	250.
17	0.98	11.8	59.0	70.8	81.6	94.4	106.	118.	130.	142.	153.	163.	177.	189.	201.	212.	236.	260.	283.
18	1.10	13.2	66.0	79.2	92.4	106.	119.	132.	145.	158.	172.	185.	198.	211.	224.	240.	264.	290.	317.
19	1.23	14.7	73.6	88.4	103.	118.	132.	147.	162.	177.	192.	206.	221.	235.	250.	265.	294.	324.	354.
20	1.36	16.8	81.6	98.0	114.	130.	147.	163.	180.	196.	212.	229.	245.	261.	277.	294.	326.	359.	392.
21	1.50	18.0	90.0	108.	126.	144.	162.	180.	198.	216.	238.	252.	270.	288.	306.	324.	360.	396.	432.
22	1.65	19.8	99.0	119.	139.	158.	178.	198.	218.	238.	257.	277.	297.	317.	337.	356.	396.	436.	476.
23	1.80	21.6	108.	130.	151.	173.	194.	216.	238.	259.	281.	302.	324.	346.	367.	389.	432.	476.	518.
24	1.96	23.5	118.	141.	165.	188.	212.	235.	259.	282.	306.	330.	353.	376.	400.	424.	470.	518.	564.
25	2.12	25.5	128.	153.	179.	204.	230.	255.	281.	306.	332.	358.	383.	408.	434.	460.	510.	562.	612.
26	2.30	27.6	138.	166.	193.	221.	248.	276.	304.	331.	359.	386.	414.	442.	470.	496.	552.	608.	662.
27	2.48	29.7	148.	178.	208.	238.	267.	297.	326.	356.	386.	416.	426.	476.	504.	534.	594.	652.	712.
28	2.67	32.0	160.	192.	224.	256.	288.	320.	352.	384.	416.	448.	480.	512.	544.	576.	640.	704.	768.
29	2.86	34.3	171.	206.	240.	274.	309.	343.	377.	412.	446.	480.	514.	548.	584.	618.	686.	754.	824.
30	3.06	36.7	183.	220.	257.	294.	330.	367.	404	440.	476.	514.	550.	588.	624.	660.	734.	808.	880.
32	3.48	41.8	209.	251.	293.	334.	376.	418.	460.	502.	544.	586.	668.	668.	710.	752.	836.	920.	1004.
34	3.93	47.2	236.	283.	330.	378.	424.	472.	520.	566.	614.	660.	708.	756.	802.	848.	944.	1040.	1132.
36	4.41	52.9	264.	317.	370.	422.	476.	528.	582.	634.	688.	740.	793.	844.	898.	952.	1056.	1164.	1268.

[a]inch = 25.4 mm; foot = 0.3048 m; gallon = 3.785 1.

© 2003 by Béla Lipták

A.8 Directory of "Lost" Companies

W. H. BOYES WITH S. EDVI (2003)

INTRODUCTION

Between 1990 and 2002, the instrumentation, systems, and automation industries were subject to significant change. Not only was this change of a technical nature, with significant advances in many product areas, but this period has also been one of consolidation among suppliers who manufacture instruments and control systems.

Identified in this appendix are more than 200 companies whose name, ownership, or product line changed significantly during the period from 1990 to 2002. This list is not complete, and the authors believe that there are many more companies, most outside North America, whose names have also changed in the same fashion.

This turmoil among suppliers has had a significant effect on the ability of instrument engineers to locate familiar products or to find companies to service their existing and installed equipment. For example, the Fischer & Porter Company, a well known name in 1990, had ceased to exist as a brand by 2002. The company itself was purchased by Elsag BV and merged with Bailey Controls to form Bailey-Fischer-Porter. Later, Elsag sold the combined companies to ABB, which elected to drop both trade names in favor of ABB Process Instrumentation.

So, an instrument engineer whose company installed Fischer & Porter instrumentation or control systems in the early 1990s may now find it difficult to find information, manuals, and sources for spare parts or service for Fischer & Porter systems. The company, as you will see in the table below, is just one of many manufacturers whose name has changed. We hope that this information will be helpful in making the reader's life a little easier.

© 2003 by Béla Lipták

TABLE A.8a
Alphabetic Listing of "Lost Companies"

Prior name	*Intermediate, if any*	*2002*
AEG Automation Systems		Cegelec
AEG Schneider Automation	Groupe Schneider/Schneider Electric	Schneider Automation
Altek Calibrators		Transmation
American Sigma		American Sigma Div. of Danaher
Ametek McCrometer	Ketema-McCrometer	McCrometer Div. of Danaher
Amscor	Fluid Data	ThermoONIX
Anatel	Anatel Div. of Danaher	Pacific Scientific Instruments Div. of Danaher
Anchor Darling		Flowserve Corp.
Applied Automation Inc.	Elsag-Bailey	ABB Process Automation (much of AAI was sold to Siemens)
Arthur Technology		Respirometry Plus
ASAP Software	Xycom Automation/Pro-face America Div. of Digital-Japan	Schneider Electric
Ashcroft-Heise		Ashcroft-Heise Div. of Dresser Industries Instruments
Astro	Hach Co.	Hach Div. of Danaher
Aquamatic Inc.		Osmonics, Inc.
Automax		Flowserve Corp.
Azonix		Crane Co.
Baan Software		Invensys
Badger Meter Ultrasonic Div.		Badger Eastech Inc.
Bailey Controls	Elsag-Bailey	ABB Process Automation
Beta Products	Hathaway-Beta	Beta Calibrators Div. Hathaway Process Instrumentation Corp.
Bettis Actuators & Controls		Emerson Process Measurement
Bindicator	Aaliant	Bindicator Div. of Venture Measurement
Biosynergy Inc.		Biosynergy Inc. Div. of America Clinical Laboratory
Brooks Instruments	Rosemount-Brooks	Emerson Process Measurement, Brooks Div.
Edmond Buhler GmbH	Buhler Montec	Buhler Montec Div. of Danaher (consolidated with Hach)
Eurcontrol	BTG	Hach Div. of Danaher
Cannonbear Technologies	TN Technologies	ThermoMeasureTech
Celtek	Bindicator Celtek; Aaliant	Bindicator Div. of Venture Measurement
Chessell	Eurotherm	Invensys
Chino Works Ltd.		Chino Corporation
Combustion Engineering		ABB Process Automation
Daniel Industries	Rosemount	Emerson Process Measurement, Daniel Div.
Detector Electronics Corp.		Det-Tronics
Dietrich Standard (Annubar)	Rosemount	Emerson Process Measurement, Dietrich Div.
Direct Measurement Corp.	DMC	FMC Energy Systems Group
Drexelbrook Eng. Co.		Ametek Drexelbrook
DuPont Process Instruments		Ametek Process Instruments Div.
Eastech Controls	Neptune Eastech	Badger Eastech Inc.
Eckhardt	Siebe	Invensys
Edward Valve	Invensys Flow Control	Flowserve Corp.
Elsag-Bailey		ABB Process Automation
Ever Ready Thermometer Company		Apogent Technologies Co.

© 2003 by Béla Lipták

TABLE A.8a Continued
Alphabetic Listing of "Lost Companies"

Prior name	*Intermediate, if any*	*2002*
Fenwal		Kidde-Fenwal
Fischer and Porter Co.	Elsag-Bailey	ABB Process Automation
Fischer and Porter Co. (chlorination Div. only)		Capital Controls Co. Div. of Severn Trent
Fisher Controls Inc.	Fisher-Rosemount Inc.	Emerson Process Measurement
Flow Research	Polysonics	ThermoPolysonics
Fluenta AB		Roxar Flow Measurement
Fluid Data Inc	Thermo ONIX	Thermo Electron
Forma Scientific Co.		Forma Scientific Co. Div. of Thermo Electron
Foxboro	Siebe	Invensys
FTS Systems Inc.		FTS Kinetics
Gas Measuring Technology		RMG Group—Germany
GEMS Sensors	IMO-Delaval Gems	GEMS-Danaher
GE Kaye Instruments		GE Kaye Instruments Div. of GE Industrial Systems
Gilbarco		Gilbarco Div. of Danaher
Great Lakes Instruments	GLI-Viridor	Danaher-GLI
Griffith Industrial		Winters Instrumentation
Groupe Schneider	Schneider Electric	Schneider Automation
Hach Chemical Co.	Hach Inc.	Hach Div. of Danaher
Hart Scientific	Hart Scientific Div. of Fluke	Hart Scientific Div. of Danaher Electronic Test and Measurement
Hartmann and Braun	Elsag-Bailey	ABB Process Automation
Heinrichs Messtechnik		Bopp and Reuther
Heise Instruments		Ashcroft-Heise Div. of Dresser Industries Instruments
Helicoid Instruments		Helicoid Instruments Div. of Bristol Babcock
Hewlett Packard	HP Instruments	Agilent Technologies
Hiac-Royco	Pacific Scientific Inc.	Pacific Scientific Instrumentation Div. of Danaher
Hydrolab Inc.	Hydrolab Div. of Danaher	Hach Div. of Danaher
InLine Measurements		Honeywell Inc.
Intellution	Emerson Process Management	GE Fanuc Automation
Invalco Inc. (Smith Meters)	FMC Invalco	FMC Energy Systems Group
ISA Instruments	Solartron ISA	Solartron ISA Div. of Roxboro
John Fluke Co.	Fluke Inc.	Fluke Div. of Danaher Electronic Test and Measurement
Fluke Inc. (networks and communications only)	Fluke Networks Inc.	Fluke Networks Div. of Danaher Electronic Test and Measurement
Joseph Kaye Co.		GE Kaye Instruments
Kammer		Flowserve Corp.
Kay-Ray	Rosemount-Kay-Ray	ThermoMeasureTech
KDG Mobrey Ltd.	KDG Mobrey Ltd. Div. of Solartron	Solartron Div. of Roxboro
Kent Meter Co.	Kent Taylor	ABB Process Automation
Kistler-Morse	(Ultrasonics to Amer. Sigma)	Kistler-Morse Div. of Danaher
Kollmorgen	Kollmorgen Div. of Danaher	Dahaher Motion-General Purpose Systems
Lakewood Instruments	Fisher-Rosemount Inc.	Osmonics, Inc.
Lear Siegler Measurement Systems	Bowthorpe plc	Spirent plc

© 2003 by Béla Lipták

TABLE A.8a Continued
Alphabetic Listing of "Lost Companies"

Prior name	*Intermediate, if any*	*2002*
Leeds and Northrop Inc.	Honeywell AIC	Honeywell Inc.
Leeds and Northrup Inc. (DCS only)		ICS
Limitorque	Invensys Flow Control	Flowserve Corp.
Liquid Metronics Inc.	LMI	Milton Roy Flow Controls, LMI Div.
Loveland Controls Ltd.	Love Controls	Dwyer Instruments
Maihak		Sick Maihak
Markal Co.		LA-CO/Markal
Marsh Instruments		Desco Inc.
Marshalltown Instruments		Desco Inc.
Masoneilan	Masoneilan Div. of Dresser	Masoneilan Div. of Dresser Flow Control
Mass Evolution		Brechbüehler AG
MDA Scientific		Zellweger Analytics
Measurex		Honeywell Inc.
Mercoid		Mercoid Div. of Dwyer Instruments Ltd.
Merlin Gerin	Groupe Schneider	Schneider Automation
Micro Motion Inc.		Micro Motion Inc. Div. of Emerson Process Measurement
Milltronics	Siemens Milltronics	Siemens
Modicon (Gould Modicon)	Groupe Schneider	Schneider Automation
Monitek Technologies		Monitek Technologies Div. of Martisa Inc.
Montedoro-Whitney Corp.	Badger Meter Ultrasonic Div.	Badger Eastech Inc.
Moore Industries Inc.		Moore Industries-International, Inc.
Moore Products Co.	Siemens Moore	Siemens
Moore Products-flow and pressure transmitter line only		MycroSENSOR Technologies Inc.
MTI		Agilent Technologies
MultiFluid International		Roxar Flow Measurement
Naf	Invensys Flow Control	Flowserve Corp.
Nametre Inc.		Nametre Div. of Metrisa Inc.
Neotronics		Zellweger Analytics
Neptune Meter Co.	Neptune Schlumberger	Actaris
Neptune-Hersey	Hersey Meter Div.	Aaliant, Aaliant Div. of Venture Measurement
Neslab Instruments Inc.	Thermo Electron	ThermoNeslab
Norriseal		Norriseal, a Dover Resources Company
Pacific Scientific ATC	Pacific Scientific div. of Danaher	Danaher Motion, General Purpose Systems
Panalarm		Panalarm Div. of Ametek Inc.
Panametrics Inc.		GE Panametrics
Patriot Sensors Inc.		Ametek Patriot Sensors
Penny and Giles Ltd.	TRENDview	Honeywell
PID	Sequencia	Rockwell Automation
PMV	Invensys Flow Control	Flowserve Corp.
Polymetron		Hach Div. of Danaher
Powers Process Controls		Moore Industries-International Inc.
Profimatics		Honeywell Inc.

© 2003 by Béla Lipták

TABLE A.8a Continued
Alphabetic Listing of "Lost Companies"

Prior name	*Intermediate, if any*	*2002*
Promac Inc.		Promac Inc. Div. of Hathaway Process Instrumentation Corp.
Robertshaw Controls		Robertshaw Controls Div. of Invensys
Rochester Instrument Systems	RIS	Ametek Inc.
Rosemount Inc.	Fisher-Rosemount Inc.	Emerson Process Measurement
Saab Level Control	Rosemount Saab	Emerson Process Management
Seaflow Inc.		Seametrics Inc.
Setpoint		Aspen Technology
Setra		Setra Div. of Danaher
Sieger		Zellweger Analytics
Signet Scientific Company	George Fischer Signet	GF Signet Inc.
Schmidt	Invensys Flow Control	Flowserve Corp.
Smith Meters		Smith Meters, a FMC Energy Systems Business
Solartron Analytical		Solartron Div. of Roxboro
Square D	Groupe Schneider	Schneider Automation
Steeplechase Software	Schneider	Entivity
Taylor Instruments	Combustion Engineering/Sybron Corp.	ABB Process Automation
TBI	TBI-Bailey; Bailey-Fischer & Porter	ABB Process Automation
Telemechanique	Groupe Schneider	Schneider Automation
Tempil		Tempil Div. of Illinois Tool Worka Inc. (ITW)
Tenny Engineering Inc. (bankrupt 2000)	Tenny Environmental	Tenny Environmental Div. of Lunaire Ltd.
Texas Nuclear Corp.	TN Technologies	ThermoMeasureTech
Tracor	Tracor Westronics	ThermoFinnegan Austin
Trend Instruments		Wika
Triconex	Siebe	Invensys
Tytronics Inc.		Tytronics Div. of Metrisa Inc.
UES	Neptune Schlumberger	Liquidated the division-out of business
UFM Vortex meter only		Asahi-America Inc.
Valtek		Flowserve Corp.
Varec Div. of Emerson	Whessoe Varec	Endress + Hauser
Veeder-Root		Veeder-Root Div. of Danaher
Water Specialties	McCrometer-Water Specialties	McCrometer Div. of Danaher
Weksler Instruments Corp.		Weksler Instruments Corp. Div. of Dresser Industries Instruments
Western Research Div. of Bow Valley Resources Ltd.	BOVAR	Ametek Process Instruments
Westinghouse Process Control		Westinghouse Process Control Div. of Emerson Process Management
Westronics Inc.	Tracor Westronics	ThermoWestronics
Wonderware Inc.	Siebe Wonderware	Wonderware Div. of Invensys
Worcester Valve	Invensys Flow Control	Flowserve Corp.
Xomox	Emerson	Crane Corp.

© 2003 by Béla Lipták